BY ORDER OF THE
SECRETARY OF THE AIR FORCE

DESR 6055.09_AFMAN 91-201

28 MAY 2020

Safety

EXPLOSIVES SAFETY STANDARDS

COMPLIANCE WITH THIS PUBLICATION IS MANDATORY

ACCESSIBILITY: Publications and forms are available on the e-Publishing website at www.e-publishing.af.mil for downloading or ordering.

RELEASABILITY: There are no releasability restrictions on this publication.

OPR: AFSEC/SEW | **Certified by: AFSEC/CV (Col William C. Culver)**

Supersedes: AFMAN 91-201, 21 March 2017 | **Pages: 623**

This manual implements *Defense Explosives Safety Regulation* (DESR) 6055.09, Edition 1, and Air Force Policy Directive (AFPD) 91-2, *Safety Programs*. This manual establishes Air Force policy for explosives safety criteria, identifies hazards, and states safety precautions and rules when working with explosives. This manual applies to all civilian employees and uniformed members of the Regular Air Force, Air Force Reserve, and Air National Guard involved in explosives operations. Ensure that all records created as a result of processes prescribed in this publication are maintained in accordance with (IAW) Air Force Instruction (AFI) 33-322, *Records Management and Information Governance Program*, and disposed of IAW Air Force Records Information Management System (AFRIMS) Records Disposition Schedule (RDS). Refer recommended changes and questions about this publication to the OPR using the AF Form 847, *Recommendation for Change of Publication*; route AF Forms 847 from the field through the appropriate functional chain of command. This publication may be supplemented at any level, but all supplements must be routed to the Office of Primary Responsibility (OPR) of this publication for coordination prior to certification and approval. Send MAJCOM supplements to AFSEC/SEW, 9700 G Avenue SE, Kirtland AFB NM 87117-5670. The authorities to waive wing or unit level requirements in this publication are identified with a Tier ("T-0, T-1, T-2, T-3") number following the compliance statement. See AFI 33-360, *Publications and Forms Management*, for a description of the authorities associated with the Tier numbers. Submit requests for waivers in accordance with paragraph 1.2.6. and Volume 1 – Enclosure 3 to the appropriate Tier waiver approval authority, or alternately, to the requestor's commander for non-tiered compliance items. The use of the name or mark of any specific manufacturer, commercial product, commodity, or service in this publication does not imply endorsement by the Air Force.

SUMMARY OF CHANGES

This document has been substantially revised and needs to be completely reviewed. This revision reflects changes in guidance and procedures dealing with Air Force explosives safety standards. Major changes include completely revising AFMAN 91-201 as a supplement to DESR 6055.09, Edition 1; incorporation of the Air Force Guidance Memorandum 2020-01; and rearrangement of AFMAN 91-201 to align with DESR 6055.09.

Defense
Explosives
Safety
Regulation

Defense Explosives Safety Regulation 6055.09
Edition 1
~ DESR 6055.09, Edition 1 ~
January 13, 2019

The Defense Explosives Safety Regulation (DESR) is a USD(A&S) publication, published through the Department of Defense Explosives Safety Board (DDESB) under the authority of DoD Directive (DoDD) 6055.09E:

> *Explosives and chemical agent (CA) safety standards and regulations developed and maintained by the Office of the Under Secretary of Defense for Acquisition and Sustainment (USD(A&S)), through the DDESB, carry the full weight and authority of the Secretary of Defense.*

DESR 6055.09 establishes explosives safety standards for the Department of Defense. These standards are designed to manage explosives-related risk associated with DoD operations and installations by providing protection criteria to minimize serious injury, loss of life, and damage to property.

DESR 6055.09, Edition 1 will replace:
DoD 6055.09-M, "DoD Ammunition and Explosives Safety Standards"

- Volume 1, "General Explosives Safety Information and Requirements," March 12, 2012
- Volume 2, "Explosives Safety Construction Criteria," April 6, 2012
- Volume 3, "General Quantity-Distance Criteria for Accidental Detonations," March 12, 2012
- Volume 4, "Quantity-Distance Criteria for Airfields and Heliports, Piers and Wharfs, and Specific Facilities," March 12, 2012
- Volume 5, "Quantity-Distance Criteria for Intentional Burns or Detonations, Energetic Liquids, and Underground Storage," September 2, 2011
- Volume 6, "Contingency Operations, Toxic Chemical Munitions and Agents, and Risk-Based Siting," August 31, 2011
- Volume 7, "Criteria for Unexploded Ordnance, Munitions Response, Waste Military Munitions, and Material Potentially Presenting an Explosive Hazard," August 4, 2010
- Volume 8, "Glossary," March 12, 2012

DESR 6055.09, Edition 1 is **CLEARED FOR PUBLIC RELEASE**
Available at:
https://www.denix.osd.mil/ddes

INTENTIONALLY LEFT BLANK

TABLE OF CONTENTS

GENERAL INFORMATION 24
1.1. Paragraph Numbering 24
1.2. Use of the Term "Manual." 24
1.3. Applicability 24
1.4. Policy 26
1.5. DESR 6055.09 Revision Process 26
VOLUME 1: GENERAL EXPLOSIVES SAFETY INFORMATION AND REQUIREMENTS 29
V1.1. Introduction. 29
VOLUME 1 – ENCLOSURE 1: REFERENCES 30
VOLUME 1 – ENCLOSURE 2: RESPONSIBILITIES 31
V1.E2.1. USD(A&S) 31
V1.E2.2. Assistant Secretary of Defense for Sustainment (ASD(S)) 31
V1.E2.3. DoD Component Heads 31
VOLUME 1 – ENCLOSURE 3: DEVIATIONS 33
V1.E3.1. General 33
V1.E3.1.10. **(Added)(AF)** Deviations for Non-DoD Explosives Activities on Air Force Installations 34
V1.E3.2. Waivers 34
V1.E3.3. Exemptions 35
V1.E3.4. Secretarial Exemptions or Certifications 36
V1.E3.5. Waiver and Exemption Information. 37
V1.E3.6. **(Added)(AF)** Event Waivers (Non-recurring). 39
V1.E3.7. **(Added)(AF)** NON-QD WAIVER 40
V1.E3.8. **(Added)(AF)** Secreterial Exemptions or Certifications Information Requirements. 41
V1.E3.9. **(Added)(AF)** Waiver and Exemption Decision Nomograph. 42
V1.E3.10. **(Added)(AF)** Periodic Reviews for Waivers and Exemptions 48
VOLUME 1 –ENCLOSURE 4: ACCIDENT NOTIFICATION AND REPORTING REQUIREMENTS 51
V1.E4.1. Scope 51
V1.E4.2. Security Classification. 51
V1.E4.3. Accident Notification Requirements 51
V1.E4.4. Accident Reports 52
V1.E4.4.1. Event Circumstances 52
V1.E4.4.2. Event Effects 53
V1.E4.4.3. Factors Contributing to or Limiting Event Effects 53
V1.E4.4.4. Structures 54
V1.E4.4.5. Vessels, Vehicles, and Mobile Equipment 54
V1.E4.4.6. Personnel 54
V1.E4.4.7. AE and CAs 54
V1.E4.4.8. Prevention of Future Accidents 54
V1.E4.5. CA Accidents 54
V1.E4.5.1. Personnel 54

V1.E4.5.2. Accident Area 55
VOLUME 1 – ENCLOSURE 5: REQUIRED EXPLOSIVES SAFETY SUBMISSIONS (ESSS) 56
V1.E5.1. ESS Categories 56
V1.E5.2. Site and General Construction Plans Review 56
V1.E5.2.1. Submission of Plans 56
V1.E5.2.1.5. **(Added)(AF)** Purpose of Explosives Site Planning 56
V1.E5.2.1.6. **(Added)(AF)** Responsibilities for Explosives Site Planning 57
V1.E5.2.1.7. **(Added)(AF)** Explosives Clear Zones 57
V1.E5.2.1.8. **(Added)(AF)** Monitoring of Explosives Clear Zones 57
V1.E5.2.1.9. **(Added)(AF)** Mapping Requirements for Explosives Clear Zones 57
V1.E5.2.1.10. **(Added)(AF)** Funding for Projects Requiring an ESP 57
V1.E5.2.1.11. **(Added)(AF)** Facility Modifications or Change in Use 58
V1.E5.2.1.12. **(Added)(AF)** ESP Development and Installation-Level Coordination. .. 59
V1.E5.2.1.13. **(Added)(AF)** ESP Contents 60
V1.E5.2.1.14. **(Added)(AF)** ESP Submission and MAJCOM and Air Force-Level Coordination Process 60
V1.E5.2.1.15. **(Added)(AF)** ESP Approval 61
V1.E5.2.1.16. **(Added)(AF)** Maintenance of Approved ESPs 62
V1.E5.2.1.17. **(Added)(AF)** ESPs for Non-DoD Explosives Activities on Air Force Installations 62
V1.E5.2.1.18. **(Added)(AF)** Siting a Non-Explosives ES 63
V1.E5.2.1.19. **(Added)(AF)** ESPs Involving Deviations 63
V1.E5.2.1.20. **(Added)(AF)** Tiered ESPs 63
V1.E5.2.2. Vulnerable Facility Construction. 64
V1.E5.2.3. Site Plan Submission Requirements 64
V1.E5.2.3.3.1.1. **(Added)(AF)** Components of the ESP 64
V1.E5.2.3.3.1.2. **(Added)(AF)** Transmittal Letter 64
V1.E5.2.3.3.1.3. **(Added)(AF)** ESP Submittal Form. 68
V1.E5.2.3.3.2.8. **(Added)(AF)** Construction Drawings and Structural Engineering Analyses 71
V1.E5.2.3.3.2.9. **(Added)(AF)** Automated Explosives Safety Siting 72
V1.E5.2.3.3.2.10. **(Added)(AF)** Alternative Submittal Form Formats 72
V1.E5.3. Site Plans Not Required. 80
VOLUME 1 – ENCLOSURE 6: HAZARD CLASSIFICATION, STORAGE AND COMPATIBILITY PRINCIPLES 82
V1.E6.1. Hazard Classification. 82
V1.E6.1.4. **(Added)(AF)** Hazard Classification Authorities 82
V1.E6.1.5. **(Added)(AF)** Requirement for DoD Hazard Classification 82
V1.E6.2. DoD Hazard Classification System 82
V1.E6.2.1. Hazard Classes and Divisions 82
V1.E6.2.2. Storage and Transportation CGs 85
V1.E6.2.3. Sensitivity Groups (SGs) 86
V1.E6.3. Storage and Compatibility Principles 87
V1.E6.3.12. **(Added)(AF)** Found-on-Installation AE 88
V1.E6.3.13. **(Added)(AF)** Dangerously Unserviceable AE 89

V1.E6.4. Mixed CG Storage 89
V1.E6.5. **(Added)(AF)** Storage and Transportation Without DoD Hazard Classification. .. 92
V1.E6.6. **(Added)(AF)** Explosives With DOE Hazard Classifications 92
V1.E6.7. **(Added)(AF)** DoD-Owned Non-Stock-Listed Commercial Explosives..... 92
V1.E6.8. **(Added)(AF)** Manufacturing, R&D Items 94
V1.E6.9. **(Added)(AF)** Foreign Explosives 94
V1.E6.10. **(Added)(AF)** Non-DoD-Owned Explosives 95
V1.E6.11. **(Added)(AF)** Hazard Classification of Unpackaged Items 97
V1.E6.12. **(Added)(AF)** Locally Written Instructions 99
V1.E6.13. **(Added)(AF)** Contents of Locally Written Instructions 100
V1.E6.14. **(Added)(AF)** Personnel Qualifications 100
V1.E6.15. **(Added)(AF)** Personnel Limits 101
V1.E6.16. **(Added)(AF)** Explosives Limits 101
V1.E6.17. **(Added)(AF)** Housekeeping 102
V1.E6.18. **(Added)(AF)** Handling of Explosives 103
V1.E6.19. **(Added)(AF)** Portable Equipment 104
V1.E6.20. **(Added)(AF)** Requirements for Test, Disassembly, and Modification of Explosives Items 104
V1.E6.21. **(Added)(AF)** Electrical Testing of Explosives Items 105
V1.E6.22. **(Added)(AF)** Use of Live Explosives for Weapons System Testing..... 106
V1.E6.23. **(Added)(AF)** Places of Public Assembly 106
V1.E6.24. **(Added)(AF)** Static or Public Displays 106
V1.E6.25. **(Added)(AF)** Fireworks Displays and Airshow Events 107
V1.E6.26. **(Added)(AF)** Hunting 109
V1.E6.27. **(Added)(AF)** Training Involving Blank Ammunition (including dye-marking cartridges) 110
V1.E6.28. **(Added)(AF)** Military Working Dog Explosives 110
V1.E6.29. **(Added)(AF)** Repairing Containers 111
V1.E6.30. **(Added)(AF)** Remotely Controlled Operations 111
V1.E6.31. **(Added)(AF)** Flightline Munitions Holding Areas 111
V1.E6.32. **(Added)(AF)** Security Response Team Ammunition at the Missile Alert Facility (MAF). 111
V1.E6.33. **(Added)(AF)** Operations in Explosives Storage Spaces Containing Explosives. 111
V1.E6.34. **(Added)(AF)** Selection of Explosives Storage Method. 112
V1.E6.35. **(Added)(AF)** Explosives Storage in Operating Locations 113
V1.E6.36. **(Added)(AF)** Explosives Storage Facility Maintenance. 113
V1.E6.37. **(Added)(AF)** Explosives Stocks Maintenance. 113
V1.E6.38. **(Added)(AF)** Marking of Explosives Stocks 114
V1.E6.39. **(Added)(AF)** Munitions in Austere Areas 114
V1.E6.40. **(Added)(AF)** Privately-owned Ammunition. 115
V1.E6.41. **(Added)(AF)** Government Arms and Ammunition. 115
V1.E6.42. **(Added)(AF)** Explosives Transportation. 115
V1.E6.42.1. **(Added)(AF)** Federal Regulation 116
V1.E6.42.2. **(Added)(AF)** DoD Directives 116

V1.E6.42.3. **(Added)(AF)** Local Laws Regulating Transportation of Explosives and Dangerous Articles 116
V1.E6.42.4. **(Added)(AF)** Hazard Classification Requirements for Transportation. ... 116
V1.E6.42.5. **(Added)(AF)** Commercial Explosives Hazard Classification Requirements for Transportation. 116
V1.E6.42.6. **(Added)(AF)** Compatibility of Explosives During Transportation. 117
V1.E6.42.7. **(Added)(AF)** Compatibility of Explosives During Temporary Storage... 118
V1.E6.42.8. **(Added)(AF)** Packaging. 118
V1.E6.42.9. **(Added)(AF)** Shipment of Damaged Explosives or Explosives that Failed To Function. 119
V1.E6.42.10. **(Added)(AF)** Transporting Dangerously Unserviceable Explosive Items for Disposal 119
V1.E6.42.11. **(Added)(AF)** Explosives Movement Routes on-Installation 119
V1.E6.42.12. **(Added)(AF)** Incoming Explosives Shipments 119
V1.E6.42.13. **(Added)(AF)** In-Transit Explosives Shipments or Secure Holding..... 119
V1.E6.42.14. **(Added)(AF)** Inspection of Incoming Explosives Shipments..... 120
V1.E6.42.15. **(Added)(AF)** Inspection of Outgoing Explosives Shipments..... 120
V1.E6.42.16. **(Added)(AF)** Interchange Yards 121
V1.E6.42.17. **(Added)(AF)** Holding Yards 121
V1.E6.42.18. **(Added)(AF)** Classification Yards 121
V1.E6.42.19. **(Added)(AF)** Transportation and Movement of Explosives by Motor Vehicle. 122
V1.E6.42.20. **(Added)(AF)** Transporting Explosives in Passenger Compartments 122
V1.E6.42.21. **(Added)(AF)** Transporting EIDs 122
V1.E6.42.22. **(Added)(AF)** Transporting Aircraft Seats and Survival Kits..... 123
V1.E6.42.23. **(Added)(AF)** Packaging. 123
V1.E6.42.24. **(Added)(AF)** Placarding 123
V1.E6.42.25. **(Added)(AF)** Motor Vehicle Inspection. 123
V1.E6.42.26. **(Added)(AF)** Load Protection and Stability 124
V1.E6.42.27. **(Added)(AF)** Loading and Unloading 125
V1.E6.42.28. **(Added)(AF)** Vehicle Refueling 125
V1.E6.42.29. **(Added)(AF)** Battery-Powered MHE 126
V1.E6.42.30. **(Added)(AF)** Gasoline or Diesel-Powered MHE 126
V1.E6.42.31. **(Added)(AF)** Liquefied Petroleum (LP) and Compressed Natural Gas (CNG) Fueled Vehicles 127
V1.E6.42.32. **(Added)(AF)** Exposed Explosives Precautions 127
V1.E6.42.33. **(Added)(AF)** Storage of Powered MHE 127
V1.E6.42.34. **(Added)(AF)** Operating Powered MHE Inside Structures 128
V1.E6.42.35. **(Added)(AF)** Maintenance of Vehicles Carrying Explosives..... 128
V1.E6.42.36. **(Added)(AF)** Transportation of Explosives by Rail 128
V1.E6.42.37. **(Added)(AF)** Tools for Loading and Unloading Railcars 128
V1.E6.42.38. **(Added)(AF)** Rail Interchange Yards 129
V1.E6.42.39. **(Added)(AF)** Rail Holding Yards 129
V1.E6.42.40. **(Added)(AF)** Rail Classification Yards 129
V1.E6.42.41. **(Added)(AF)** Transportation of Explosives by Air..... 129

V1.E6.42.42. **(Added)(AF)** Transportation of Explosives by Water 129
VOLUME 1 – ENCLOSURE 7: QD, DETERMINING NEWQD, AND QD PRINCIPLES, MEASUREMENTS, AND CALCULATIONS 130
V1.E7.1. General 130
V1.E7.2. Determining the Quantity of Explosives 130
V1.E7.2.1. General 130
V1.E7.2.2. Determining the NEWQD for a Single HD 130
V1.E7.2.3. Determining the NEWQD for Mixed HDs 132
V1.E7.3. QD Principles 134
V1.E7.4. QD Measurements 135
V1.E7.4.4. **(Added)(AF)** Measuring to an ES 136
V1.E7.5. QD Calculations 137
V1.E7.5.1. QD K-factors 137
V1.E7.5.2. Rounding 137
VOLUME 1 – ENCLOSURE 8: REACTION EFFECTS 138
V1.E8.1. Introduction. 138
V1.E8.2. HD 1.1 Effects 138
V1.E8.2.1. Blast 138
V1.E8.2.2. Fragments 143
V1.E8.2.3. Thermal Hazards 144
V1.E8.2.4. Ground Shock and Cratering 144
V1.E8.2.5. Expected Consequences 144
V1.E8.3. HD 1.2 Effects 148
V1.E8.3.1. Blast 148
V1.E8.3.2. Fragments 149
V1.E8.3.3. Thermal Hazards 149
V1.E8.3.4. Ejected Items 149
V1.E8.3.5. Propelled Items 149
V1.E8.3.6. Firebrands 149
V1.E8.3.7. Expected Consequences 149
V1.E8.4. HD 1.3 Effects 150
V1.E8.4.1. Gas Pressures 150
V1.E8.4.2. Fragments 150
V1.E8.4.3. Thermal Hazards 150
V1.E8.4.4. Propelled Items 151
V1.E8.4.5. Firebrands 151
V1.E8.4.6. Expected Consequences 151
V1.E8.5. HD 1.4 Effects 151
V1.E8.5.1. Blast 151
V1.E8.5.2. Fragmentation. 151
V1.E8.5.3. Thermal Hazard. 151
V1.E8.5.4. Firebrands 151
V1.E8.5.5. CG S Items 151
V1.E8.5.6. Expected Consequences 151
V1.E8.6. HD 1.5 Effects 152

V1.E8.7. HD 1.6 Effects 152
VOLUME 1 – ENCLOSURE 9: PERSONNEL PROTECTION 153
V1.E9.1. Scope and Application. 153
V1.E9.2. Risk Assessment 153
V1.E9.2.5. **(Added)(AF)** Risk Management 154
V1.E9.2.6. **(Added)(AF)** System Safety 154
V1.E9.2.7. **(Added)(AF)** Professional Assistance for Risk Assessments and System Safety Analyses 154
V1.E9.2.8. **(Added)(AF)** Safety Certification of Munitions Systems 154
V1.E9.2.9. **(Added)(AF)** Risk Assessments for Explosives Equipment 154
V1.E9.2.10. **(Added)(AF)** Risk Assessment for Explosives Operations 155
V1.E9.2.11. **(Added)(AF)** Risk Assessments for Explosives Facilities 155
V1.E9.2.12. **(Added)(AF)** Purpose of Glass Breakage Risk Assessments 155
V1.E9.2.13. **(Added)(AF)** Requirements for Performance of Glass Breakage Risk Assessments. 155
V1.E9.2.14. **(Added)(AF)** Methodology for Glass Breakage Risk Assessments 156
V1.E9.3. Permissible Exposures 157
V1.E9.3.1. Accidental Ignition or Initiation of Explosives 157
V1.E9.3.2. Intentional Ignition or Initiation of AE 158
V1.E9.4. Protective Measures 159
V1.E9.4.9. **(Added)(AF)** Glass Panels in Facilities Exposed to Explosives Hazards... 160
V1.E9.5. QRA 161
V1.E9.6. **(Added)(AF)** Health Hazard Assessments 161
V1.E9.7. **(Added)(AF)** Environmental Assessments 161
VOLUME 1 – ENCLOSURE 10: HAZARD IDENTIFICATION FOR FIREFIGHTING AND EMERGENCY PLANNING 162
V1.E10.1. Scope and Application 162
V1.E10.2. Fire Divisions 162
V1.E10.3. Fire Division Symbols 164
V1.E10.4. CA and Chemical Munition Hazard Symbols 168
V1.E10.5. Firefighting Measures 172
V1.E10.5.1. General 172
V1.E10.5.2. Emergency Withdrawal Distances 173
V1.E10.5.3. Firefighting Involving CAs 174
V1.E10.5.4. Firefighting Involving Underground Storage Facilities 176
V1.E10.6. Emergency Planning 176
V1.E10.6.5. **(Added)(AF)** Emergency Operations 176
V1.E10.6.6. **(Added)(AF)** Fire Drills 177
V1.E10.6.7. **(Added)(AF)** Heat-Producing Devices 177
V1.E10.6.8. **(Added)(AF)** Vegetation Control 177
V1.E10.6.9. **(Added)(AF)** Firebreaks 178
V1.E10.6.10. **(Added)(AF)** Controlled Burning 178
V1.E10.6.11. **(Added)(AF)** Flammable Liquids for Cleaning 178
V1.E10.6.12. **(Added)(AF)** Paint and Other Flammable Materials 178
V1.E10.6.13. **(Added)(AF)** Operating Support Equipment 179

V1.E10.6.14. **(Added)(AF)** Stacking Combustible Material. 179
V1.E10.6.15. **(Added)(AF)** Fire Extinguishers 180
V1.E10.6.16. **(Added)(AF)** Storing Water for Firefighting 181
V1.E10.6.17. **(Added)(AF)** Smoking and Electronic or Vapor Cigarettes 181
VOLUME 1 – ENCLOSURE 11: TERMINATION OF USE OF FACILITIES FOR STORING AE 182
V1.E11.1. General Termination Process 182
V1.E11.1.8. **(Added)(AF)** Elimination of Explosives Clear Zones 182
V1.E11.2. Additional Termination Requirements for Facilities in Which Waste Military Munitions Were Stored. 182
VOLUME 2: EXPLOSIVES SAFETY CONSTRUCTION CRITERIA 183
V2.1. Introduction. 183
VOLUME 2 – ENCLOSURE 1: REFERENCES 184
VOLUME 2 – ENCLOSURE 2: RESPONSIBILITIES 185
VOLUME 2 – ENCLOSURE 3: ELECTRICAL STANDARDS 186
V2.E3.1. General 186
V2.E3.2. Hazardous Locations 186
V2.E3.2.4. **(Added)(AF)** Hardware in Hazardous Locations 186
V2.E3.2.5. **(Added)(AF)** Ventilation in Hazardous Locations 187
V2.E3.3. Special Occupancies 187
V2.E3.3.1. Acceptable Approaches for Inadequate Protection. 187
V2.E3.3.2. Underground Storage Facilities 187
V2.E3.4. Static Electricity 187
V2.E3.4.1. **(Added)(AF)** Requirement for Static Grounding 188
V2.E3.4.2. **(Added)(AF)** Areas Requiring Static Grounding and Bonding Systems 188
V2.E3.4.3. **(Added)(AF)** Static Grounding and Bonding 189
V2.E3.4.4. **(Added)(AF)** Hazardous locations 189
V2.E3.4.5. **(Added)(AF)** Temporary Static Grounding or Bonding Cables 190
V2.E3.4.6. **(Added)(AF)** Static Grounding or Bonding Reels 190
V2.E3.4.7. **(Added)(AF)** Installed Systems and Equipment Grounds 191
V2.E3.4.8. **(Added)(AF)** Static Grounding for Handling Unpackaged EIDs 191
V2.E3.4.9. **(Added)(AF)** Static Grounding for Aircraft During Explosives Loading and Unloading 192
V2.E3.4.10. **(Added)(AF)** Static Grounding Techniques 192
V2.E3.4.11. **(Added)(AF)** Methods to Reduce the Hazards of Static Electricity 193
V2.E3.5. Electric Supply Systems 194
V2.E3.6. Surge Protection for Incoming Conductors 195
V2.E3.7. Hazards of Electromagnetic Radiation to Ordnance (HERO) 195
V2.E3.7.1. Certification of Military Munitions 195
V2.E3.7.2. EME Controls 195
V2.E3.8. Posting of RF Warnings 196
V2.E3.8.1. HERO Warning Signs 196
V2.E3.8.2. HERO Warning Labels 196
V2.E3.9. Radio Frequency Identification (RFID) 196
VOLUME 2 – ENCLOSURE 4: LIGHTNING PROTECTION 198
V2.E4.1. Criteria 198

V2.E4.2. LPS Design and Installation. ... 198
V2.E4.2.1. Sideflash Protection. ... 198
V2.E4.2.2. Earth Electrode System ... 201
V2.E4.2.3. Surge Protection. ... 201
V2.E4.2.4. Underground Storage Facilities ... 201
V2.E4.3. Inspection, Testing, Records and Data, Training, and Maintenance ... 201
V2.E4.3.1. Visual Inspection. ... 201
V2.E4.3.2. Electrical Tests ... 201
V2.E4.3.3. Records and Data ... 202
V2.E4.3.4. Training ... 202
V2.E4.3.5. Maintenance ... 202
V2.E4.4. Lightning Protection Exceptions ... 202
V2.E4.5. Alternate LPS ... 204
V2.E4.6. **(Added)(AF)** Procedures in the Event of Electrical Storms ... 204
V2.E4.6.1. **(Added)(AF)** Local Lightning Watch and Warning Support ... 204
V2.E4.6.2. **(Added)(AF)** Procedures in the Event of Lightning for Conventional AE Only ... 204
V2.E4.6.3. **(Added)(AF)** Procedures in the Event of Lightning for Nuclear Weapons.205
VOLUME 2 – ENCLOSURE 5: CONSTRUCTION CRITERIA PERMITTING REDUCED SEPARATION DISTANCES ... 206
V2.E5.1. General ... 206
V2.E5.1.6. **(Added)(AF)** Existing, Approved Protective Construction Designs ... 207
V2.E5.1.7. **(Added)(AF)** Modifications to Previously Approved Protective Construction Designs ... 207
V2.E5.1.8. **(Added)(AF)** New Protective Construction Designs ... 208
V2.E5.2. Special Structures ... 208
V2.E5.3. AGMs ... 208
V2.E5.4. Barricades ... 208
V2.E5.4.1. General ... 208
V2.E5.4.2. Barricade Designs ... 209
V2.E5.4.3. Barricade Construction Materials ... 211
V2.E5.4.4. Portal Barricades for Underground Storage Facilities ... 212
V2.E5.4.5. Earth-filled, Steel Bin-type Barricades (ARMCO, Inc. Revetments or Equivalent) for Outside Storage ... 213
V2.E5.4.6. **(Added)(AF)** Natural Barricades ... 215
V2.E5.4.7. **(Added)(AF)** Inspection of Barricades ... 215
V2.E5.4.8. **(Added)(AF)** Substantial Dividing Walls ... 215
V2.E5.5. ECM ... 215
V2.E5.6. Barricaded Open Storage Modules ... 217
V2.E5.7. HPMs ... 222
V2.E5.8. Underground Storage Facilities ... 222
V2.E5.8.1. General Design Considerations ... 222
V2.E5.8.2. Debris Mitigation. ... 222
V2.E5.8.3. Airblast Mitigation. ... 224
V2.E5.8.4. Chamber Separation Requirements ... 226

V2.E5.8.5. Chamber Cover Thickness ... 228
VOLUME 3: GENERAL QD CRITERIA FOR ACCIDENTAL DETONATIONS ... 231
V3.1. Introduction. ... 231
VOLUME 3 – ENCLOSURE 1: REFERENCES ... 232
VOLUME 3 – ENCLOSURE 2: RESPONSIBILITIES ... 233
VOLUME 3 – ENCLOSURE 3: QD CRITERIA FOR ACCIDENTAL DETONATIONS ... 234
V3.E3.1. HD 1.1 ... 234
V3.E3.1.1. Permissible Exposures to Airblast Overpressure ... 234
V3.E3.1.2. Minimum Fragment Distances ... 248
V3.E3.1.3. IBD and PTRD ... 262
V3.E3.1.4. ILD ... 264
V3.E3.1.5. IMD ... 265
V3.E3.2. HD 1.2 ... 278
V3.E3.3. HD 1.3. ... 290
V3.E3.4. HD 1.4 ... 291
V3.E3.5. HD 1.6. ... 291
V3.E3.6. HD 6.1 ... 291
APPENDIX: FIGURES CITED IN ENCLOSURE 3 ... 316
VOLUME 4: QD CRITERIA FOR AIRFIELDS AND HELIPORTS, PIERS AND WHARFS, AND SPECIFIC FACILITIES ... 322
V4.1. Introduction ... 322
VOLUME 4 – ENCLOSURE 1: REFERENCES ... 323
VOLUME 4 – ENCLOSURE 2: RESPONSIBILITIES ... 324
VOLUME 4 – ENCLOSURE 3: AIRFIELDS AND HELIPORTS ... 325
V4.E3.1. Scope and Application. ... 325
V4.E3.1.3. **(Added)(AF)** General Airfield Criteria ... 325
V4.E3.1.4. **(Added)(AF)** Explosives Cargo Aircraft Related Activities ... 325
V4.E3.1.5. **(Added)(AF)** Munitions or Weapons Storage Area Related Activities ... 325
V4.E3.1.6. **(Added)(AF)** Integrated Combat Turnarounds (ICT) ... 326
V4.E3.1.7. **(Added)(AF)** Hot-Pit Refueling Operations ... 326
V4.E3.1.8. **(Added)(AF)** End-of-Runway (EOR) and Arm or de-Arm Pads and Crew Shelters ... 326
V4.E3.1.9. **(Added)(AF)** Other Aircraft Configurations ... 326
V4.E3.1.10. **(Added)(AF)** Reduced MCEs for F-15, F-16, and F-22 Aircraft with AIM Series Missiles. ... 326
V4.E3.2. Measurement of Separation Distances ... 327
V4.E3.2.1. Loaded Aircraft to Loaded Aircraft ... 327
V4.E3.2.2. AE Location to Taxiways and Runways ... 328
V4.E3.3. AE Prohibited Areas ... 328
V4.E3.4. Additional Siting Criteria ... 328
V4.E3.4.1. Used Exclusively by the DoD Components and Allied Nation Military Components ... 328
V4.E3.4.2. Not Used Exclusively by the DoD Components and Allied Nation Military Components ... 328
V4.E3.5. Aircraft Parking Areas ... 328

V4.E3.6. Combat Aircraft Support Facilities ... 329
V4.E3.7. HAS ... 333
V4.E3.7.1. General ... 333
V4.E3.7.2. Allowable NEWQD ... 337
V4.E3.7.3. HAS Separation for IMD and Asset Preservation ... 337
V4.E3.7.4. HAS Separation to Unhardened ESs ... 338
V4.E3.7.5. Maintenance HASs ... 339
V4.E3.7.8. **(Added)(AF)** Revetments ... 339
V4.E3.7.9. **(Added)(AF)** Aircraft Battle Damage Repair Sites ... 340
V4.E3.8. Helicopter Landing Areas for AE Operations ... 348
VOLUME 4 – ENCLOSURE 4: PIERS AND WHARFS ... 350
V4.E4.1. Scope and Application. ... 350
V4.E4.2. Determining the Quantity of Explosives in a Ship ... 350
V4.E4.3. Measurement of Separation Distances ... 350
V4.E4.3.1. Moored Ships ... 350
V4.E4.3.2. Pier Operations ... 351
V4.E4.3.3. Anchorages ... 351
V4.E4.4. Siting Criteria and Application of QD ... 351
V4.E4.4.1. Maritime Prepositioning Ships (MPSs) ... 351
V4.E4.4.2. Scuttling Site ... 353
V4.E4.4.3. Explosives Anchorages ... 353
V4.E4.4.4. Separation Distances of Ships at the Same Pier ... 354
V4.E4.4.5. Separation of Wharf Yard from the Pier ... 354
V4.E4.4.6. Separation of Explosives Ships from Other Ships ... 354
V4.E4.4.7. Barge Piers and Anchorages ... 354
V4.E4.4.8. Separation of Pre-positioning Program Ships at Anchorages ... 354
V4.E4.5. QD Tables ... 355
V4.E4.6. General Cargo and Vehicles at AE Terminals ... 355
VOLUME 4 – ENCLOSURE 5: SPECIFIC FACILITIES ... 357
V4.E5.1. Scope and Application. ... 357
V4.E5.2. Administration and Industrial Areas and Auxiliary Facilities ... 357
V4.E5.3. Classification Yard ... 357
V4.E5.4. Inert Storage ... 358
V4.E5.4.9. **(Added)(AF)** Protective Shielding and Remotely Controlled Operations.. 359
V4.E5.5. Interchange Yards ... 359
V4.E5.6. Inter-DoD Component Support and Tactical Facilities ... 360
V4.E5.6.1. General ... 360
V4.E5.6.2. Minimum QD Relationships ... 360
V4.E5.7. Detached Loading Docks ... 360
V4.E5.8. Holding Yards for Railcars and Trucks Containing AE ... 360
V4.E5.9. Inspection Stations for Railcars and Trucks Containing AE ... 361
V4.E5.10. Holding Areas for Suspect Railcars or Trucks Containing AE ... 362
V4.E5.11. AE Transportation Mode Change Locations ... 362
V4.E5.12. Secure Holding Area ... 362
V4.E5.12.1. Secure Explosives Holding Area ... 363

V4.E5.12.2. Secure Non-explosives Holding Area 363
V4.E5.13. Storage Tanks for Hazardous Materials 363
V4.E5.14. Storage Tanks for Water 365
V4.E5.15. Underground Tanks or Pipelines for Non-Hazardous Materials 365
V4.E5.16. Temporary Construction or Maintenance Operations 365
V4.E5.16.1. **(Added)(AF)** Removal of Explosives 366
V4.E5.16.2. **(Added)(AF)** Requirements for Maintenance and Repair With Explosives Present 366
V4.E5.16.3. **(Added)(AF)** Maintenance of Explosives Facilities 366
V4.E5.16.4. **(Added)(AF)** Maintenance and Repair in Hazardous Locations 367
V4.E5.16.5. **(Added)(AF)** Maintenance and Repair of Hazardous Location Equipment and Electrical Installations 367
V4.E5.16.6. **(Added)(AF)** Maintenance and Repair of Electrical Equipment 367
V4.E5.16.7. **(Added)(AF)** Post-Maintenance and Repair of Explosives Facilities and Equipment 367
V4.E5.17. Military Working Dog (MWD) Explosives Search Training 367
V4.E5.18. Demilitarization Processing Equipment and Operations for Expended .50-Caliber and Smaller Cartridge Casings 368
V4.E5.19. Conveyance Loading and Unloading at a Magazine 369
V4.E5.20. Reduced QD Magazines 370
V4.E5.20.1. Siting of Reduced QD Magazines 370
V4.E5.20.2. Authorized Operations at Reduced QD Magazines 371
V4.E5.21. Criteria for Non-DoD Explosives Activities (AE Operations and Storage) on DoD Installations 373
V4.E5.22. Renewable Energy Projects 374
V4.E5.23. Mobile Missile Systems Used in a Static, Defensive Role 374
V4.E5.23.3. **(Added)(AF)** Tactical Missile Separations 376
V4.E5.24. BLAHAs and AHAs 378
V4.E5.24.1. Storage Compatibility. 378
V4.E5.24.2. NEWQD Computations 378
V4.E5.24.3. Explosives Limits 378
V4.E5.24.4. QD Computations 378
V4.E5.25. Parking Lots 384
V4.E5.26. **(Added)(AF)** Service Magazines for Operating Locations 384
V4.E5.27. **(Added)(AF)** Other Allowable Exposures 385
V4.E5.28. **(Added)(AF)** LGM-30 (Minuteman) 386
V4.E5.29. **(Added)(AF)** SPACE AND INTERCONTINENTAL BALLISTIC MISSILE REQUIREMENTS 387
V4.E5.29.2. **(Added)(AF)** Support Facilities 387
V4.E5.29.3. **(Added)(AF)** Safety Control Area 389
V4.E5.29.4. **(Added)(AF)** Simultaneous Operations 389
V4.E5.29.5. **(Added)(AF)** Barricades 390
V4.E5.29.6. **(Added)(AF)** Space Launch Complex 390
V4.E5.29.7. **(Added)(AF)** Space Test Facilities 390
V4.E5.29.8. **(Added)(AF)** Risk Management 390

V4.E5.29.9. **(Added)(AF)** Space and ICBM Criteria. 393
VOLUME 5: QD CRITERIA FOR INTENTIONAL BURNS OR DETONATIONS, ENERGETIC LIQUIDS, AND UNDERGROUND STORAGE 398
V5.1. Introduction. 398
VOLUME 5 – ENCLOSURE 1: REFERENCES 399
VOLUME 5 – ENCLOSURE 2: RESPONSIBILITIES 400
VOLUME 5 – ENCLOSURE 3: AREAS USED FOR INTENTIONAL BURNS AND DETONATIONS 401
V5.E3.1. Locations Used for Intentional Burns of AE or Static Firing of Motors 401
V5.E3.1.1. General 401
V5.E3.1.2. Protective Construction. 401
V5.E3.1.3. NEW 404
V5.E3.1.4. Damaged AE 404
V5.E3.1.5. Essential Personnel MSD 404
V5.E3.1.6. Non-Essential Personnel MSD 404
V5.E3.1.7. Other Applicable QD 405
V5.E3.2. Locations Used for Intentional Detonations 405
V5.E3.2.1. General 406
V5.E3.2.2. Intentional Detonation of HDs Other than HD 1.1. 406
V5.E3.2.3. Vent to Burn 406
V5.E3.2.4. NEW 406
V5.E3.2.5. Essential Personnel MSD 406
V5.E3.2.6. Non-Essential Personnel MSD 407
V5.E3.2.7. MFD 408
V5.E3.2.8. Non-Design Mode Initiation 417
V5.E3.2.9. Multiple Item Initiation 417
V5.E3.2.10. Other Applicable QD 418
V5.E3.2.11. EOD Operations 422
V5.E3.2.12. Live-fire Demonstrations and Disposal Operations 428
VOLUME 5 – ENCLOSURE 4: ENERGETIC LIQUIDS 431
V5.E4.1. Scope and Application 431
V5.E4.2. Concept 431
V5.E4.3. Determination of Energetic Liquids Quantity 431
V5.E4.4. Measurement of Separation Distances 434
V5.E4.5. Hazard Classification of Energetic Liquids 434
V5.E4.6. QD Standards 442
V5.E4.7. Contaminated Energetic Liquids 444
VOLUME 5 – ENCLOSURE 5: UNDERGROUND STORAGE OF AE 452
V5.E5.1. General 452
V5.E5.2. External QD Determinations 452
V5.E5.2.1. QD Dependence on HD 452
V5.E5.2.2. QD Reference Points 453
V5.E5.2.3. IBD 453
V5.E5.2.4. PTRD 464
V5.E5.2.5. ILD 464
V5.E5.2.6. Distance to AGMs for HD 1.1 464

V5.E5.2.7. Distance to ECMs for HD 1.1 464
VOLUME 6: CONTINGENCY OPERATIONS, TOXIC CHEMICAL MUNITIONS AND AGENTS, AND RISK-BASED SITING 466
V6.1. Introduction. 466
VOLUME 6 – ENCLOSURE 1: REFERENCES 467
VOLUME 6 – ENCLOSURE 2: RESPONSIBILITIES 468
VOLUME 6 – ENCLOSURE 3: EXPLOSIVES SAFETY AND MUNITIONS RISK MANAGEMENT (ESMRM) IN OPERATIONAL PLANNING, TRAINING, AND EXECUTION 469
V6.E3.1. Purpose 469
V6.E3.2. Applicability 469
V6.E3.3. Joint and MN Operational Planning 470
V6.E3.4. Joint and MN Operational Training 471
V6.E3.5. Joint and MN ESMRM Execution 471
V6.E3.5.1. Role of the Base Operating Support Integrator (BOS-I) 471
V6.E3.5.2. Approved Explosives Safety Site Plan or Deviation. 472
V6.E3.5.3. Locations That Will Be Considered for Explosives Safety Site Plan Approval 474
V6.E3.5.4. Approval Process for MILCON That Cannot Meet Explosives Safety Requirements 474
V6.E3.6. Specific Explosives Safety Criteria 474
V6.E3.6.1. Limited Quantities of HD 1.2.2, HD 1.3, or HD 1.4 474
V6.E3.6.2. QD Reduction Using Concertainer Barricades 482
V6.E3.6.3. Fuel Storage 483
V6.E3.6.4. Emergency Destruction. 484
V6.E3.6.5. Captured Enemy Ammunition (CEA) 484
V6.E3.6.6. Mixing of DoD AE with MN AE 484
V6.E3.6.7. Concurrent DoD and MN AE Operations 485
V6.E3.7. DDESB Technical Paper 15. 485
V6.E3.8. Application of Other Than DoD Explosives Safety Requirements 485
VOLUME 6 – ENCLOSURE 4: TOXIC CHEMICAL MUNITIONS AND AGENTS 487
V6.E4.1. Scope and Application 487
V6.E4.2. Siting Criteria 488
V6.E4.2.1. Hazard Distance Calculations 488
V6.E4.2.2. Personnel Control 488
V6.E4.3. Workplace Airborne Exposure Limit (AEL) 488
V6.E4.4. Toxic CA Hazard Analyses, Measurements, and Exposure Controls 489
V6.E4.4.1. Hazard Analyses 489
V6.E4.4.2. Measurements 489
V6.E4.4.3. Exposure Control 490
V6.E4.5. Medical Surveillance 490
V6.E4.6. Worker PPE 490
V6.E4.7. Administrative and Work Practice Controls 492
V6.E4.7.1. Containment 492
V6.E4.7.2. Training and Information 493
V6.E4.7.3. Recordkeeping 493

V6.E4.7.4. Labeling and Posting of Hazards ... 493
V6.E4.7.5. Emergencies ... 495
V6.E4.7.6. Toxic CA Decontamination ... 495
V6.E4.7.7. Recertification of Protective Clothing. ... 496
V6.E4.7.8. Transportation of Items or Materials Contaminated with Toxic CAs ... 496
V6.E4.7.9. Transportation of Toxic Chemical Munitions and Bulk Agents ... 496
V6.E4.8. Engineering Design Guidance for Facilities ... 496
V6.E4.8.1. Air Ventilation Systems ... 496
V6.E4.8.2. Mechanical and Utilities Design for Facilities ... 497
V6.E4.8.3. General Design Considerations ... 498
VOLUME 6 – ENCLOSURE 5: RISK-BASED SITING ... 499
V6.E5.1. Scope ... 499
V6.E5.2. Risk-Based Siting Tool ... 499
V6.E5.3. Risk-Based Site Planning Requirements ... 499
V6.E5.4. Risk-Based Explosives Safety Site Plan Documentation Requirements. ... 500
V6.E5.5. Risk-Based Explosives Safety Site Plan Review Requirements ... 501
V6.E5.6. Quantitative Risk Management Comparative Analysis. ... 501
V6.E5.7. Equivalent Risk-Based Analysis Tool ... 502
VOLUME 7: UXO, MUNITIONS RESPONSE, WASTE MILITARY MUNITIONS, AND MATERIAL POTENTIALLY PRESENTING AN EXPLOSIVE HAZARD (MPPEH) ... 504
V7.1. Introduction. ... 504
VOLUME 7 – ENCLOSURE 1: REFERENCES ... 505
VOLUME 7 – ENCLOSURE 2: RESPONSIBILITIES ... 506
VOLUME 7 – ENCLOSURE 3: UXO ... 507
V7.E3.1. Scope ... 507
V7.E3.2. General ... 507
V7.E3.3. Disposition of UXO and Other Military Munitions Being Managed as UXO ... 509
V7.E3.4. Special Considerations ... 511
V7.E3.4.1. Disassembly and Inerting Operations ... 511
V7.E3.4.2. Construction Support ... 512
V7.E3.4.3. Anomaly Avoidance ... 513
V7.E3.5. Access to Areas Known or Suspected to Contain UXO ... 514
V7.E3.6. Identification and Control ... 516
V7.E3.7. MSD for UXO ... 516
V7.E3.8. Other Considerations ... 517
V7.E3.8.1. Transportation. ... 517
V7.E3.8.2. Firefighting Involving Areas Known or Suspected to Contain UXO or DMM. ... 517
V7.E3.8.3. Controlled Burns ... 518
V7.E3.8.4. Technology ... 518
VOLUME 7 – ENCLOSURE 4: REAL PROPERTY KNOWN OR SUSPECTED TO CONTAIN MEC AND CAS ... 519
V7.E4.1. Scope ... 519
V7.E4.2. Explosives Safety Standards for the Identification and Control of Areas Known or Suspected to Contain MEC or CAs ... 520

V7.E4.3. Explosives and CA Safety Aspects of Response Actions 522
V7.E4.3.1. General..... 522
V7.E4.3.2. Explosives Safety and CA Safety Aspects in the Selection and Design of Responses..... 523
V7.E4.4. Special Considerations 525
V7.E4.4.1. Explosive Soil..... 525
V7.E4.4.2. Real Property (Buildings and Installed Equipment)..... 526
V7.E4.4.3. Construction Support..... 526
V7.E4.4.4. Anomaly Avoidance 528
V7.E4.4.5. Frost Heave..... 529
V7.E4.4.6. Soil Containing CAs..... 529
V7.E4.5. Required Safety Submissions (ESS, CSS, and Explosives or CWM Site Plans). 531
V7.E4.5.1. Requirements..... 531
V7.E4.5.2. DDESB Approval Required. 531
V7.E4.5.3. DDESB Approval Not Required. 532
V7.E4.5.4. MRS Investigation or Characterization. 532
V7.E4.5.5. NDAI or NOFA ESS or CSS..... 532
V7.E4.5.6. TCRA ESS or CSS 533
V7.E4.5.7. Construction Support ESS or CSS..... 534
V7.E4.5.8. Selected Munitions Response ESS 534
V7.E4.5.9. Selected CWM Response CSS and CWM Site Plans..... 543
V7.E4.6. Amendments and Corrections 546
V7.E4.6.1. Amendments..... 547
V7.E4.6.2. Corrections..... 547
V7.E4.7. AAR..... 548
V7.E4.8. Transfer of Real Property Outside of DoD Control..... 549
V7.E4.8.1. Notices 549
V7.E4.8.2. Restrictions and Conditions..... 549
VOLUME 7 – ENCLOSURE 5: SPECIAL STORAGE PROCEDURES FOR WASTE MILITARY MUNITIONS 551
V7.E5.1. Scope and Application..... 551
V7.E5.2. Waivers and Exemptions 551
V7.E5.2.1. CE Storage 551
V7.E5.2.2. RCRA Storage 551
V7.E5.3. Requirements for Storage of Waste Military Munitions Under CE 551
V7.E5.3.1. Compliance with section 266.205(a) of Title 40, CFR..... 552
V7.E5.3.2. DoD Component Responsibilities 552
V7.E5.3.3. Loss of CE 553
V7.E5.4. Other Storage Standards 553
V7.E5.5. Unpermitted and Uncontrolled Loss Reporting..... 554
V7.E5.6. Closure of Facilities Storing Waste Military Munitions Under CE..... 554
V7.E5.7. Closure of Facilities Storing Waste Military Munitions Under RCRA..... 555
VOLUME 7 – ENCLOSURE 6: MPPEH 556
V7.E6.1. Scope 556
V7.E6.2. Functions 556

V7.E6.2.4. **(Added)(AF)** Training. 556
V7.E6.3. Collected MPPEH 557
V7.E6.3.1. Control 557
V7.E6.3.2. Siting 557
V7.E6.3.3. Marking and Securing 557
V7.E6.3.4. Transporting 558
GLOSSARY 560
G.1. Acronyms 560
G.2. Definitions 571
REFERENCES 610
(ADDED)(AF) FORMS ADOPTED 619

TABLES

V1.E3.T1. **(Added)(AF)** Likelihood of a Mishap 45
V1.E3.T2. **(Added)(AF)** Exposure 46
V1.E3.T3. **(Added)(AF)** Explosive Mishap Severity 47
V1.E3.T4. **(Added)(AF)** Explosives Safety Waiver or Exemption Review Elements International Legal Considerations 48
V1.E5.T1. **(Added)(AF)** EZs for ESs 75
V1.E5.T2. **(Added)(AF)** Sample Explosives Safety Site Plan Submittal Form 76
V1.E6.T1. Storage Compatibility Mixing Chart 91
V1.E8.T2. Expected Peak Incident Pressures from HD 1.1 Events 139
V1.E8.T3. Probability of Window Breakage from Incident Pressure 140
V1.E8.T4. General Blast Effects on Personnel – Eardrum Rupture 142
V1.E8.T5. General Blast Effects on Personnel – Lung Damage 142
V1.E8.T6. General Blast Effects on Personnel – Lethality Due to Lung Rupture 143
V1.E10.T7. Fire Divisions 162
V1.E10.T7.1. **(Added)(AF)** Fire Division Hazards and Actions 163
V1.E10.T8. Fire Division Symbols 164
V1.E10.T9. CG and Chemical Hazard Symbols Required for Storage of Chemical Ammunition and Substances 171
V1.E10.T10. Emergency Withdrawal Distances for Nonessential Personnel 175
V2.E4.T1. **(Added)(AF)** Lightning Sideflash Policy for Nuclear Weapon Configurations 199
V2.E5.T1. HD 1.1 IMD for Barricaded Open Storage Module 221
V2.E5.T2. Chamber Separation Distances Required to Prevent Damage and Propagation by Rock Spall 227
V3.E3.T1. HD 1.1 IBD and PTRD 251
V3.E3.T2. HD 1.1 HFD 255
V3.E3.T3. HFD for Open Stacks of Selected HD 1.1 AE 257
V3.E3.T3.1. **(Added)(AF)** HFD for Open Stacks of Selected HD 1.1 AE[a] (AMRAAM, AIM-120/WDU-33/B and WDU-41/B) 258
V3.E3.T4. HD 1.1 ILD 266
V3.E3.T5. HD 1.1 ILD from ECM 269
V3.E3.T6. HD 1.1 IMD Hazard Factors 273
V3.E3.T7. QD for HD 1.1 AE for K = 1.1, 1.25, 2, 2.75, 4.5, and 5 274
V3.E3.T8. QD for HD 1.1 AE for K = 6, 8, 9, 11, 18, and 40 276

V3.E3.T9. Summary of HD 1.2.1, 1.2.2, and 1.2.3 QD 280
V3.E3.T10. HD 1.2.1 QD (IBD, PTRD, ILD) for AE with NEWQD > 1.60 lbs [0.73 kg] 283
V3.E3.T11. HDD for HD 1.2.1 AE Stored in Structures That Can Contribute to the Debris Hazard 286
V3.E3.T12. HD 1.2.2 QD (IBD, PTRD, ILD) for AE with NEWQD ≤1.60 lbs [0.73 kg] 287
V3.E3.T13. HD 1.2.1, 1.2.2, and 1.2.3 Mixing Rules 290
V3.E3.T14. HD 1.3 QD 292
V3.E3.T15. HD 1.4 QD 296
V3.E3.T16. HD 1.6 QD 298
V3.E3.T17. **(Added)(AF)** HD 1.1 QD Criteria 301
V3.E3.T18. **(Added)(AF)** HD 1.2.1, 1.2.2, and 1.2.3 QD Criteria 306
V3.E3.T19. **(Added)(AF)** HD 1.3, 1.4 and 1.6 QD Criteria 311
V4.E3.T1. Application of AE Separation Distances for Airfields and Heliports 329
V4.E3.T2. HD 1.1 QD for Military Aircraft Parking Areas 331
V4.E3.T3. Minimum Hazard Factor for HASs to Prevent Simultaneous Detonation, Part 1 341
V4.E3.T4. Minimum Hazard Factor for HASs to Prevent Simultaneous Detonation, Part 2 342
V4.E3.T5. Minimum Hazard Factor for HASs for Asset Preservation, Part 1 344
V4.E3.T6. Minimum Hazard Factor for HASs for Asset Preservation, Part 2 345
V4.E3.T7. QD from a Third Generation HAS PES to an Unhardened ES 347
V4.E3.T8. QD from a First Generation HAS PES to an Unhardened ES 348
V4.E4.T9. Variation of MPS QD Factors with Loadout 352
V4.E5.T10. Criteria for Non-DoD Explosives Activities on DoD Installations 373
V4.E5.T11. QD Requirements for Armored and Non-armored Vehicles 379
V4.E5.T12. QD for BLAHAs and AHAs 380
V4.E5.T13. **(Added)(AF)** Minuteman TNT Equivalencies 397
V5.E3.T1. Default Maximum Case Fragment Distances Versus Diameter for Intentional Detonations 410
V5.E3.T2. Default Maximum Case Fragment Distances Versus Net Explosive Weight NEW for Intentional Detonations 413
V5.E4.T3. Hazard Classifications and Minimum QD For Energetic Liquids 432
V5.E4.T4. Factors to Use When Converting Energetic Liquid Densities 435
V5.E4.T5. Energetic Liquid Equivalent Explosive Weights 440
V5.E4.T6. QD Criteria for OSHA/NFPA Class I-III Flammable and Combustible Energetic Liquids Storage in Detached Buildings or Tanks 444
V5.E4.T7. QD Criteria for Energetic Liquid Oxidizer (Excluding LO_2) Storage in Detached Buildings or Tanks 445
V5.E4.T8. QD Criteria for LO_2 Storage in Detached Buildings or Tanks 447
V5.E4.T9. QD Criteria for LH_2 and Bulk Quantities of Hydrazines 448
V5.E5.T10. Distances to Protect Against Ground Shock 455
V5.E5.T11. Functions of Loading Density 456
V5.E5.T12. Debris Dispersal Function 458
V5.E5.T13. Off-axis Distance Ratios 461
V5.E5.T14. Values for Ratio, $D_{HYD}/V_E^{1/2.8}$ 461
V5.E5.T15. Values for Ratio, $R(\theta)/(D_{HYD}/V_E^{1/2.8})$, Without Mitigating Devices 463

V6.E4.T1. AELs 489
V6.E4.T2. PPE and Employee Exposure Potential....491
V6.E5.T1. Risk-Based Explosives Siting Acceptance Criteria 500
V7.E4.T1. HWCLs 530
V7.E4.T2. HBESLs....531
V7.E4.T3. **(Added)(AF)** NDAI MRESS Review Elements....533
V7.E4.T4. **(Added)(AF)** MRESS Review Requirements 541

FIGURES

V1.E3.F1. **(Added)(AF)** Sample Narrative for Air Force QD Deviation Request....36
V1.E3.F2. **(Added)(AF)** Waiver and Exemption Decision Nomograph....39
V1.E5.F1. **(Added)(AF)** EZ Examples 73
V1.E5.F2. **(Added)(AF)** Sample Automated Explosives Safety Siting Submittal Drawing....74
V1.E7.F1. Examples for Rounding of QD Calculations....137
V1.E10.F2. Fire Division Symbols....167
V1.E10.F3. Chemical Hazard Symbols 169
V1.E10.F4. Supplemental Chemical Hazard Symbols 170
V2.E5.F1. Determination of Barricade Length and Height to Prevent Prompt Propagation Due to High-Velocity, Low-Angle Fragments 211
V2.E5.F2. Portal Barricade Location, Height, and Width....213
V2.E5.F3. Typical Eight-Cell Open Storage Module....218
V2.E5.F4. Typical Underground Storage Facilities....223
V2.E5.F5. Paragraph V2.E5.8.3.5.1.2.1. Equations 225
V2.E5.F6. Paragraph V2.E5.8.5. Equations 229
V3.E3.F1. ECM Orientation Effects on IMD: Side-to-Side Orientation....316
V3.E3.F2. HPM Orientation Effects....316
V3.E3.F3. ECM Orientation Effects on IMD: Side-to-Side Orientation....317
V3.E3.F4. ECM Orientation Effects on IMD 317
V3.E3.F5. ECM Orientation Effects on IMD 318
V3.E3.F6. ECM Orientation Effects on IMD: Canted ECMs 318
V3.E3.F7. ECM Orientation Effects on IMD: ECMs of Significantly Different Lengths 319
V3.E3.F8. ECM Orientation Effects on Barricaded and Unbarricaded IMD and ILD....320
V4.E3.F1. HAS Orientation Effects 334
V4.E3.F2. **(Added)(AF)** Reduced MCEs and QDs for F-15 Aircraft in the Open 335
V4.E3.F3. **(Added)(AF)** Reduced MCEs and QDs for F-16 Aircraft in the Open 336
V4.E4.F2. Application of Separation Distances for Ship or Barge 356
V5.E5.F1. D_{ig}, Moderately Strong to Strong Rock ($w \leq 3.0$ lb/ft^3 [48.1 kg/m^3]) 454
V5.E5.F2. D_{ig}, Moderately Strong to Strong Rock ($w > 3.0$ lb/ft^3 [48.1 kg/m^3]) and Other Materials 454
V5.E5.F3. Decoupling Factor, f_g....454
V5.E5.F4. D_{id}, $C_c < 2.5W^{1/3}$ [$1.0Q^{1/3}$]) 457
V5.E5.F5. Decoupling Factor, f_d....457
V5.E5.F6. Distance Versus Overpressure Along the Centerline Axis....459
V5.E5.F7. Distance Versus Overpressure Off the Centerline Axis....460
V5.E5.F8. Overpressure at IBD....460
V5.E5.F9. On-axis IBD....460

V6.E3.F1. CCDR ESMRM Process Flow 471
V6.E3.F2. Explosives Safety Site Planning Process Decision Matrix (Locations that Can Meet Requirements) 473
V6.E3.F3. Explosives Safety Site Planning Process Decision Matrix (Locations that Cannot Meet Requirements) 473

INTENTIONALLY LEFT BLANK

GENERAL INFORMATION

1.1. PARAGRAPH NUMBERING. This publication is divided into 7 volumes. The initial numeric set (V#) refers to the volume number within the publication; the second set (E#) refers to the enclosure number; and subsequent numbers refer to the section and paragraph numbers. If there is no E#, the reference is to the main body of the volume.

1.2. USE OF THE TERM "MANUAL." The term "manual" is used throughout this document when referring to this DESR.

1.2.1. **(Added)(AF)** "Shall", "must", and "will" and other similar terms indicate a mandatory compliance provisions that must be waived or deviated from IAW AFI 33-360 and this manual. "Will" is also used to express a declaration of purpose for a future event.

1.2.2. **(Added)(AF)** "Should" indicates a preferred, but not mandatory, method of accomplishment.

1.2.3. **(Added)(AF)** "May" indicates an acceptable or suggested means of accomplishment.

1.2.4. **(Added)(AF)** "Sign" indicates a requirement to obtain and maintain a signature by digital, electronic, or hard copy means.

1.2.5. **(Added)(AF)** For purposes of this manual, the term "MAJCOM" includes Major Commands, Field Operating Agencies, Direct Reporting Units, and designated Air Component Commands (e.g., U.S. Air Forces Central (USAFCENT)).

1.2.6. **(Added)(AF)** With the exception of Tier-0 **(T-0)** identified requirements that cannot be waived at the Air Force level, commanders will ensure all deviations (e.g., waivers, exemptions, event waivers, non-quantity-distance (QD) waivers, and Secretary of the Air Force (SECAF) waivers and exemptions for new construction) to this manual are accomplished IAW **Volume 1 – Enclosure 3**. **(T-1).** All remaining waivers will be submitted IAW AFI 33-360.

1.3. APPLICABILITY.

1.3.1. DESR 6055.09 applies to:

1.3.1.1. OSD, the Military Departments, the Office of the Chairman of the Joint Chiefs of Staff and the Joint Staff, the Combatant Commands, the Office of the Inspector General of the Department of Defense, the Defense Agencies, the DoD Field Activities, and all other organizational entities in the DoD (referred to collectively in this volume as the "DoD Components").

1.3.1.2. DoD-titled ammunition and explosives (AE), wherever it is located.

1.3.1.3. DoD personnel and property, when potentially endangered by known host-nation or off-installation AE hazards.

1.3.1.4. DoD facilities siting and construction, except as indicated in paragraph **1.3.2.**

1.3.1.5. The evaluation of non-DoD explosives siting submissions on DoD installations, as described in section **V4.E5.21.**

1.3.1.6. **(Added)(AF)** Ensure host-nation officials receive appropriate notification of explosives-related activities. When such ammunition is not in U.S. custody, comply with U.S. standards to the extent consistent with agreements or arrangements with the host country concerned.

1.3.1.7. (Added)(AF) Air Force-owned and contractor-operated facilities. The Procuring Contract Officer (PCO) will ensure explosives safety requirements and procedures for compliance with current DoD and Air Force guidance is clearly specified in the contract. **(T-1).**

1.3.1.8. (Added)(AF) To Air Force contract personnel exposed to AE on Air Force installations. The Air Force will provide the same level of protection to contract personnel as they provide to Air Force civilian and military personnel. The installation weapons safety office will notify the contracting officer, in writing, of explosives hazards to Air Force contract personnel. **(T-1).**

1.3.1.9. (Added)(AF) U.S. units will document their adherence to these standards by showing that U.S. exposed sites (ESs) are located at the required separation distances from host-nation potential explosion sites (PESs). **(T-1).** U.S. ESs will be licensed according to **Volume 1 – Enclosure 5**, and host-nation PESs identified in explosives site plans. **(T-1).** The identification of host-nation PESs does not constitute "siting" because the U.S. does not authorize AE for host-nation facilities not under U.S. control. If a violation of Air Force or DoD QD criteria to U.S. targets is possible based on this analysis, obtain a waiver or exemption as outlined in **Volume 1 – Enclosure 3**. **(T-0).** If correction of the problem is beyond U.S. capabilities, notify the host-nation commander by letter from the waiver or exemption approval level. **(T-0).** Attach to this letter enough information to convey the location, nature and extent of the potential explosives hazards. While other countries are not obligated to follow U.S. rules, it may be helpful to explain to host-nations that U.S. QD standards are enforced on U.S. installations, and are based on testing, experience, and scientific analysis.

1.3.2. Provided the documentation requirements of paragraph **V1.E2.3.5.** are met, does not apply to:

1.3.2.1. Existing facilities, or those approved for construction in accordance with then-current editions of these standards. This exception applies for the balance of the useful lives of such facilities, provided:

1.3.2.1.1. The facility continues to be used for its intended purpose.

1.3.2.1.2. The explosives safety hazards are not increased.

1.3.2.1.3. Redesign or modification is not practicable.

1.3.2.1.4. The quantity of AE cannot be reduced for reasons of operational necessity.

1.3.2.2. Those planned facilities that do not meet these standards but have been certified by the DoD Component heads in accordance with section **V1.E3.4.** as essential for operational or other compelling reasons.

1.3.2.3. Other situations that, upon analysis by the DoD Component heads and the DDESB, are determined to provide the required degree of safety through use of protective construction or other specialized safety features.

1.4. POLICY. Pursuant to DoDD 6055.9E and consistent with peacetime, contingency, or wartime operational requirements and corresponding DoD military munitions requirements, it is DoD policy:

1.4.1. To provide the maximum possible protection to people and property from the potential damaging effects of DoD military munitions, and minimize exposures consistent with safe and efficient operations (i.e., expose the minimum number of people for the minimum time to the minimum amount of explosives or CAs). Applying the standards in this manual provides only the minimum protection criteria for personnel and property; greater protection should always be provided when practicable.

1.4.1. **(Added)(AF)** The maxim in the first sentence is known as the cardinal principle of explosives safety.

1.4.2. When outside the United States, to comply with host-nation, applicable multinational (MN), or U.S. explosives safety standards in this manual, whichever are more protective, unless standards applicability is mandated by international agreement (IA).

1.5. DESR 6055.09 REVISION PROCESS.

1.5.1. All proposed changes to this document will first be approved by formal vote of the DDESB.

1.5.2. Following board approval, the DDESB staff distributes , through the Correspondence and Task Management System (CATMS), the proposed change to the relevant DoD Components requesting their coordination. The coordination period will be 30 calendar days from the date of the request. If a timely response is not received from a Component, the lack of response will be considered as constituting no objection to the proposed change.

1.5.3. The DDESB staff will adjudicate any comments received from the DoD Components during coordination. Unresolvable comments that modify the board's approved change will be referred back to the board for consideration.

1.5.4. The DDESB will obtain a legal sufficiency review from the Office of General Counsel, Deputy General Counsel (Environment, Energy, and Installations), of the final proposed change prior to obtaining security review.

1.5.5. Upon a finding that the change is legally sufficient, the DDESB staff will send the change for security review.

1.5.6. Upon completion of security review, the DDESB staff will complete publication.

1.5.7. The change will be posted at https://www.denix.osd.mil/ddes.

INTENTIONALLY LEFT BLANK

VOLUME 1: GENERAL EXPLOSIVES SAFETY INFORMATION AND REQUIREMENTS

V1.1. INTRODUCTION. This volume provides general explosives safety information and requirements.

VOLUME 1 – ENCLOSURE 1: REFERENCES

See References section at the end of the manual.

VOLUME 1 – ENCLOSURE 2: RESPONSIBILITIES

V1.E2.1. USD(A&S). The USD(A&S) provides overall policy guidance for the DoD Explosives Safety Management Program (ESMP).

V1.E2.2. ASSISTANT SECRETARY OF DEFENSE FOR SUSTAINMENT (ASD(S)). Under the authority, direction, and control of the USD(A&S), the ASD(S), through the Executive Director, DDESB, collaborates with the Service-appointed voting DDESB members to maintain explosives safety standards in accordance with DoDD 6055.9E.

V1.E2.3. DoD COMPONENT HEADS. The DoD Component heads:

V1.E2.3.1. Implement these DoD explosives safety standards.

V1.E2.3.2. Comply with applicable federal and State laws and regulations for explosives safety. Where this manual conflicts with such laws and regulations, notify the Executive Director, DDESB, through the Component's board member, of the conflict. These standards are not intended to be so rigid as to prevent the DoD Components from accomplishing their assigned missions.

V1.E2.3.3. Issue guidance that implements these standards and provides unique requirements by Component.

V1.E2.3.4. Send a copy of any implementing and supplementary guidance to these standards to the Executive Director, DDESB.

V1.E2.3.5. Document the exceptions described in paragraph **1.3.2.** in permanent records. These records must include:

V1.E2.3.5.1. The effective date the applicable DoD explosives safety standards were first published.

V1.E2.3.5.2. The date the deviant facility was either approved for use from an explosives safety viewpoint, or was first used in a manner deviating from the standard.

V1.E2.3.5.3. **(Added)(AF)** Original purpose and quantity of explosives approved. **(T-1).**

V1.E2.3.5.4. **(Added)(AF)** Explosives safety criteria in effect at the time of construction. **(T-1).**

V1.E2.3.5.5. **(Added)(AF)** An explanation why redesign or modification is not feasible. **(T-1).**

V1.E2.3.5.6. **(Added)(AF)** An explanation why quantities cannot be reduced below existing levels. **(T-1).**

V1.E2.3.5.7. **(Added)(AF)** An explanation why current explosives safety criteria cannot be applied to the facility. **(T-1).**

V1.E2.3.5.8. **(Added)(AF)** A statement that risks are not greater than those assumed for the original siting. **(T-1).**

V1.E2.3.5.9. **(Added)(AF)** Written approval from the installation commander and the Major Command's Chief of Safety (MAJCOM/SE) when initially invoking this deviation. **(T-1).**

V1.E2.3.5.9.1. **(Added)(AF)** The installation Weapons Safety Manager (WSM) will validate the information required in paragraph **V1.E2.3.5.** at least every five years to see if mission changes allow the facility to be brought into compliance with current standards. **(T-1).** If compliance with current standards is not possible and the facility is still being used for its original purpose and IAW its original criteria, then continue to maintain the documentation that was generated at the onset. The installation WSM will ensure documentation of the periodic review is kept on file at the installation. **(T-1).**

V1.E2.3.5.9.2. **(Added)(AF)** Resiting such facilities requires compliance with these standards unless guidance of paragraph **1.3.2.** is met or a deviation is obtained IAW **Volume 1 – Enclosure 3**. **(T-1).**

VOLUME 1 – ENCLOSURE 3: DEVIATIONS

V1.E3.1. GENERAL. When strategic or compelling operational requirements necessitate deviation from these standards, the DoD Components will:

V1.E3.1.1. Acknowledge and accept the added risk to personnel or property.

V1.E3.1.2. Document the risk and methods used to reduce it to an acceptable level in relation to the operational requirements. A quantitative risk assessment (QRA) (such as that described in **Volume 6 – Enclosure 5**) may be used.

V1.E3.1.3. **(Added)(AF)** Ease of operation or convenience is not an acceptable reason for requesting a deviation.

V1.E3.1.4. **(Added)(AF)** Risk for non-QD hazards shall be assessed by safety professionals using AFI 91-202; all other personnel shall use AFI 90-802. **(T-1).** Risk for QD deviation hazards will be assessed IAW this manual. **(T-1).** AFI 90-802 excludes explosives safety covered under DoD DESR 6055.09.

V1.E3.1.5. **(Added)(AF)** Outside Continental United States (OCONUS) locations, commanders will ensure host-nation military and civilian personnel are provided the same level of protection as U.S. personnel. **(T-1).** Commanders will ensure host-nation commanders are notified when QD deviations to DoD standards place host-nation personnel at additional risk beyond normal QD requirements. **(T-1).** If required by Status of Forces Agreements (SOFA), basing, or other international agreements, host-nation approval must be reviewed to determine if host-nation approval must be obtained, or specific notice provided. **(T-0).** Notice or approval requirements must be fulfilled. Documents establishing U.S. physical presence or activities should be reviewed to identify any notice or approval requirements. See paragraph **1.3.1.** for additional guidance, when the presence of explosives in host-nation's facilities may present a ~~be~~ hazard to Air Force facilities and personnel.

V1.E3.1.6. **(Added)(AF)** Deviations need not be submitted when compensatory measures can be taken (e.g., temporarily reducing the authorized net explosive weight for quantity-distance (NEWQD) of a PES) that avoids the QD deviation. Document as prescribed in paragraphs **V1.E5.2.3.3.1.2.7.** and **V1.E5.2.3.3.13.**

V1.E3.1.7. **(Added)(AF)** Deviations need not be submitted for situations that, upon analysis by Headquarters Air Force Safety Center/Weapons Safety Division (AFSEC/SEW) and the DoD Explosives Safety Board (DDESB) are determined to provide the required degree of safety through the use of protective construction or other specialized safety features.

V1.E3.1.8. **(Added)(AF)** The host base weapons safety offices must maintain copies of current deviations and compensatory measures. **(T-1).**

V1.E3.1.9. **(Added)(AF)** Commanders will ensure operations or activities involving deviations are not allowed until the deviation is approved via event waiver (see section **V1.E3.6.**) or approved by the required risk acceptance authority (determined by the authority levels listed in section **V1.E3.9.**). **(T-1).**

V1.E3.1.10. (Added)(AF) Deviations for Non-DoD Explosives Activities on Air Force Installations.

V1.E3.1.10.1. **(Added)(AF)** Non-DoD explosives activities, that are non-compliant with the explosives safety standards in this manual and do not hazard DoD activities or violate QD criteria to DoD activities, will not be processed as deviations.

V1.E3.1.10.2. **(Added)(AF)** Instead, ESP packages involving such non-compliant, non-DoD explosives activities will:

V1.E3.1.10.2.1. **(Added)(AF)** Specify situations where non-compliance with explosives safety requirements exists. **(T-1).**

V1.E3.1.10.2.2. **(Added)(AF)** Include a risk acknowledgement letter signed by the non-DoD user. **(T-1).**

V1.E3.1.10.2.3. **(Added)(AF)** Include installation's weapons safety office recommendation for ESP approval or disapproval with supporting rationale and installation commander coordination. **(T-1).**

V1.E3.1.10.3. **(Added)(AF)** Coordinate with the non-DoD user prior to higher headquarters submission of the ESP.

V1.E3.2. WAIVERS. A waiver is a written authority that permits temporary deviation from these standards for strategic or compelling operational requirements. Generally, a waiver is granted for a period not to exceed 5 years pending termination of the waiver or correction of the waived conditions. Exceptional situations may require reissuance of a waiver to allow time for completion of the operation requiring the waiver or of the corrective action. In such cases, the next higher approval authority must reissue the waiver, except when the DoD Component head or the responsible Combatant Commander (CCDR) has issued the waiver. The DoD Components will review waivers for applicability and currency at intervals not to exceed 2 years. Waivers may be granted by an official with both:

V1.E3.2.1. The assigned responsibilities consistent with the level of risk.

V1.E3.2.1.1. **(Added)(AF)** Figure **V1.E3.F1.** is an example nomograph used to determine the risk level associated with the QD deviation. The approval level is determined per section **V1.E3.9.**

V1.E3.2.2. The authority to control the resources required to accomplish the corrective action.

V1.E3.2.3. **(Added)(AF)** See the information requirements listed in section **V1.E3.5.** (See section **V1.E3.4.** for Secretarial exemptions or certifications). **(T-0).**

V1.E3.2.4. **(Added)(AF)** Forward waivers as part of the ESP package. MAJCOMs will validate and submit Hybrid Safety Submissions (HSS)s to AFSEC/SEW for review and subsequent submission for final approval. **(T-1).** AFSEC/SEW will return packages failing to meet the test of strategic or compelling operational need (see paragraph **V1.E3.8.5.1.**), or packages omitting information requirements listed in section **V1.E3.5.** or section **V1.E3.4.** for Secretarial exemptions or certifications.

V1.E3.2.5. **(Added)(AF)** Accomplish reviews per paragraph **V1.E3.10. (T-1).**

V1.E3.3. EXEMPTIONS. An exemption is a written authority that permits long-term noncompliance with these standards for strategic or compelling operational requirements. The DoD Components will review exemptions for applicability and currency at intervals not to exceed 5 years. Exemptions may be granted by law, Congressional action, or the official assigned responsibilities consistent with the level of risk.

V1.E3.3.1. **(Added)(AF)** Long-term noncompliance is for more than 5 years.

V1.E3.3.2. **(Added)(AF)** Utilize the nomograph in Figure **V1.E3.F2.** to determine the risk level associated with the QD deviation. The approval level is determined per section **V1.E3.9.**

V1.E3.3.3. **(Added)(AF)** Comply with the information requirements listed in section **V1.E3.5.** or section **V1.E3.4.** for Secretarial exemptions or certifications. **(T-0).**

V1.E3.3.4. **(Added)(AF)** Forward exemptions as part of the ESP package. **(T-1).** MAJCOMs will validate and submit exemption HSSs to AFSEC/SEW for review and subsequent submission for final approval. AFSEC/SEW will return packages failing to meet the test of strategic or compelling operational need (see paragraph **V1.E3.8.5.1.**), or packages omitting information requirements listed in section **V1.E3.5.** or section **V1.E3.4.** for Secretarial exemptions or certifications. **(T-1).**

V1.E3.3.5. **(Added)(AF)** Reviews may be accomplished early to spread out workloads. Accomplish reviews per paragraph **V1.E3.10. (T-1).**

Figure V1.E3.F1. (Added)(AF) SAMPLE NARRATIVE FOR AIR FORCE QD DEVIATION REQUEST

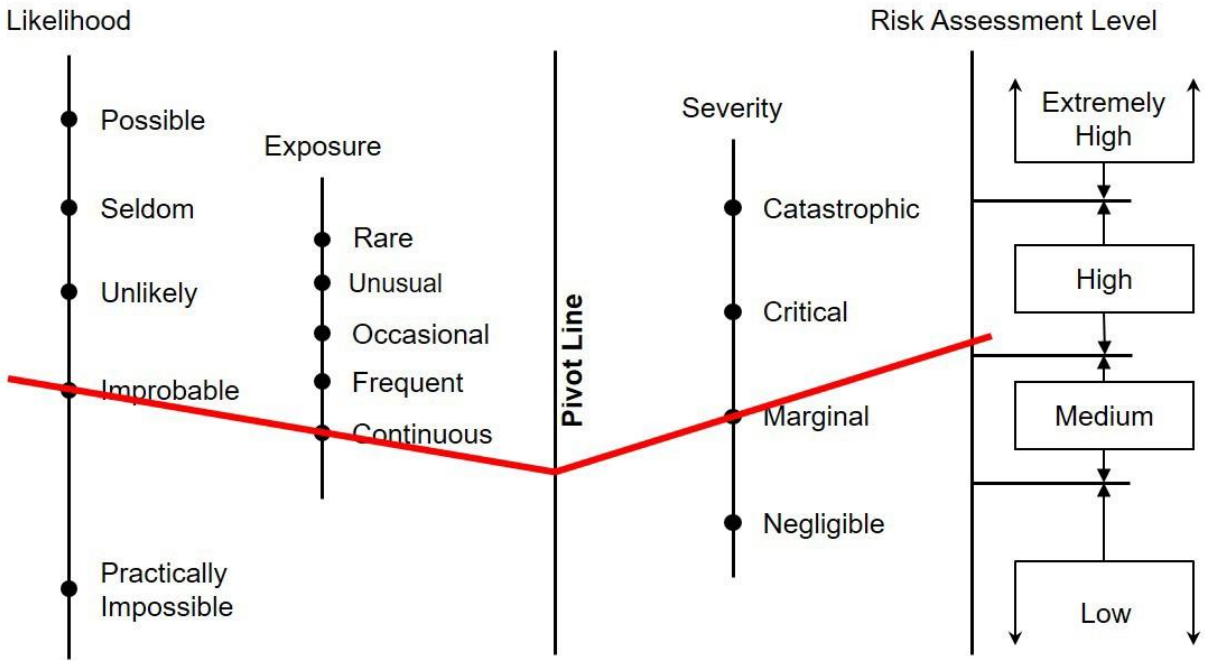

Notes: **(Added)(AF)**
1. **(Added)(AF)** Direct propagation of explosion is not expected.
2. **(Added)(AF)** Propagation of an explosion may occur at the ES, as either a direct result of a fire or as a result of equipment failure.
3. **(Added)(AF)** Unstrengthened buildings' damage may approximate 50 percent, or more, of the total replacement cost. Sensitive electronic equipment is expected to stop functioning.
4. **(Added)(AF)** Personnel may suffer serious injuries from fragments, debris, firebrands, or other objects. There is a two percent chance of eardrum damage to personnel.
5. **(Added)(AF)** Transport vehicles will incur extensive, but not severe, body and glass damage consisting mainly of dishing of body panels and cracks in shatter-resistant window glass.

V1.E3.4. SECRETARIAL EXEMPTIONS OR CERTIFICATIONS. A Secretarial Exemption or Certification is a written authority granted by a Secretary of a Military Department to deviate from the requirements of these standards to allow for the construction of new potential explosion sites (PESs) or exposed sites (ESs). To validate the strategic or compelling operational requirements and ensure the identification of risks and exposures, review these exemptions or certifications at intervals not to exceed 5 years.

V1.E3.4.1. **(Added)(AF)** The SECAF, or designated representative, approves all planned construction for locations not meeting QD standards. Exception: construction activities performed in support of contingency operations at contingency locations that do not exceed the established military construction (MILCON) low-cost threshold. This exception is not applicable to enduring locations as defined by DoDI 3000.12.

V1.E3.4.2. **(Added)(AF)** Forward Secretarial waivers and exemptions as part of the ESP package. **(T-1).** MAJCOMs will validate and submit Secretarial new construction exemption HSSs to AFSEC/SEW for review and subsequent submission for final approval. AFSEC/SEW will return packages failing to meet the test of strategic or compelling operational need, or packages omitting information requirements listed in section **V1.E3.8. (T-1).**

V1.E3.4.3. **(Added)(AF)** Commanders will ensure temporary QD departures to workers performing construction are assessed and approved IAW section **V1.E3.9. (T-1).**

V1.E3.4.4. **(Added)(AF)** Comply with section **V1.E3.8.** for information requirements and paragraph **V1.E3.10.** for review process requirements. **(T-1).**

V1.E3.5. WAIVER AND EXEMPTION INFORMATION. The DoD Components will maintain this information on waivers and exemptions.

V1.E3.5. **(Added)(AF)** Preparation of waivers and exemptions is a team effort involving installation safety, civil engineering, legal, and other agencies affected by the waiver or exemption. Involve all supporting and affected agencies to ensure thorough evaluation of the proposed waiver or exemption. (Figure **V1.E3.F1.** contains a sample narrative of a QD deviation request). Provide the following information:

V1.E3.5.1. Identification number (DoD Component-derived).

V1.E3.5.1.1. **(Added)(AF)** This number is developed using the format as described in paragraph **V1.E5.2.3.3.1.2.5.2.**

V1.E3.5.2. Classification (waiver or exemption), approval authority's title, and date of approval, expiration, or cancellation, as applicable.

V1.E3.5.3. Location.

V1.E3.5.4. Condition waived or exempted.

V1.E3.5.4. **(Added)(AF)** Cite specific reference that is being waived or exempted. **(T-1).**

V1.E3.5.5. Net explosive weight (NEW) or net explosive weight for quantity-distance (NEWQD) by hazard division (HD) (as described in paragraph **V1.E6.2.1.3.**) at a PES.

V1.E3.5.6. Distance from the PES to any ES and a brief description of the ES, to include: type, estimated value of any property involved, and location of the property (e.g., on or off installation).

V1.E3.5.7. Estimated number of DoD and non-DoD personnel located at the ES.

V1.E3.5.8. Calculated hazard distances (see the definition of "public access exclusion distance (PAED)" in the Glossary), as applicable.

V1.E3.5.9. Planned corrective action, to include the expected completion date.

V1.E3.5.9.1. Estimated cost to correct.

V1.E3.5.9.2. Military construction (MILCON) project number, if assigned.

V1.E3.5.9.3. **(Added)(AF)** Evaluation of feasible corrective actions and justification why they cannot be implemented (e.g., cost, mission impact). **(T-1).**

V1.E3.5.9.4. **(Added)(AF)** Pursue proposed corrective action or actions to ultimately correct the deviation. Several corrective actions may be pursued at the same time. For each corrective action being pursued provide associated cost estimate and schedule for completion.

V1.E3.5.9.5. **(Added)(AF)** If no corrective actions are feasible to ultimately correct the deviation, so state and provide justification.

V1.E3.5.10. **(Added)(AF)** Type of munitions involved. **(T-1).**

V1.E3.5.11. **(Added)(AF)** Strategic or compelling operational reasons for approving the waiver or exemption. **(T-1).**

V1.E3.5.12. **(Added)(AF)** Narrative explanation outlining the reason, or reasons, why the explosives safety standards could not be met and a discussion of reasonable alternatives considered and rejected. **(T-1).**

V1.E3.5.13. **(Added)(AF)** Risk assessment IAW **Volume 1 – Enclosure 9**. **(T-1).**

V1.E3.5.14. **(Added)(AF)** Waiver and exemption decision nomograph for each excepted PES to ES pair (see section **V1.E3.9.**). **(T-1).** This is only used to describe the level of risk assumed, not the required approval level as described in paragraph **V1.E3.9.2.** If the waiver and exemption decision nomograph (section **V1.E3.9.**) requires Secretarial approval, comply with the information requirements in section **V1.E3.4. (T-1).**

V1.E3.5.15. **(Added)(AF)** See **Volume 1 – Enclosure 5** for identifying waivers and exemptions in the ESP or Explosives Safety Siting Submittal Form.

V1.E3.5.16. **(Added)(AF)** Point of contact name, grade, phone, and e-mail.

Figure V1.E3.F2. (Added)(AF) Waiver and Exemption Decision Nomograph.

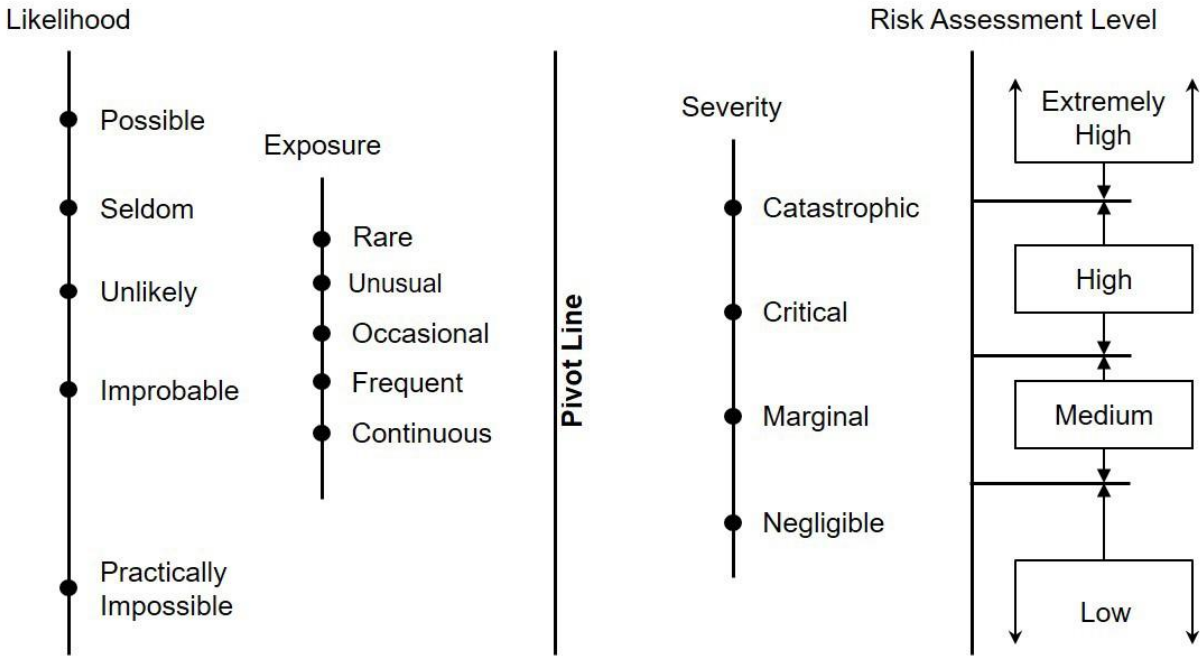

Title:_____Deviation Type: _____

V1.E3.6. (ADDED)(AF) EVENT WAIVERS (NON-RECURRING).

V1.E3.6.1. **(Added)(AF)** Event waivers provide written authority to temporarily deviate from requirements of this manual. This applies to situations occurring without sufficient time to comply with formal site planning procedures.

V1.E3.6.2. **(Added)(AF)** Event waivers are not used as a replacement for proper planning when formal explosives site planning approval can be obtained prior to the start of operations.

V1.E3.6.3. **(Added)(AF)** Event waivers are documented using a memorandum format and include information necessary to inform the responsible commander of the strategic or compelling operational reasons for the request, requirements of this manual that are non-compliant, and the risk they are accepting.

V1.E3.6.4. **(Added)(AF)** The responsible commander must approve the event waiver in writing prior to onset of operations, or as soon as possible thereafter, for the length of the operational requirement but not to exceed 365 days. **(T-1).** For operations planned beyond 365 days, formal DDESB site plan approval must be obtained prior to the waiver expiration. **(T-1).**

V1.E3.6.5. **(Added)(AF)** If the Air Force unit is a tenant on a non-Air Force installation, process according to governing directives.

V1.E3.6.6. **(Added)(AF)** Units will submit a copy of the approved event waiver to MAJCOM/SEW. **(T-1).** MAJCOM/SEW will then forward to AFSEC/SEW. Units utilizing an event waiver to conduct operations while awaiting DDESB site plan approval may include the waiver as part of the formal explosives site planning submission process.

V1.E3.7. (ADDED)(AF) NON-QD WAIVER.

V1.E3.7.1. **(Added)(AF)** A non-QD waiver is a written authority permitting a specific departure from mandatory non-QD requirements of this manual for strategic or compelling operational reasons. Generally, Volumes 3 through 5 of this manual contains QD requirements and the rest of the manual contains non-QD requirements. AFSEC/SEW must formally approve deviations from paragraph **V2.E4.2.1.**, "Sideflash Protection" or AFI 91-208.

V1.E3.7.1.1. **(Added)(AF)** Commanders will ensure non-QD waiver requests are documented as required in paragraph **V1.E3.7.4.** below, with the following changes:

V1.E3.7.1.1.1. **(Added)(AF)** For non-QD waivers from paragraph **V2.E4.2.1.**, there is an additional requirement for a detailed description of compensatory measures which have been developed and are in place. The description must include the reduced value of sideflash separation distance which will be observed. **(T-1).**

V1.E3.7.1.1.2. **(Added)(AF)** For non-QD waivers from paragraph **V2.E4.2.1.**, modify the requirement for a risk assessment (see **Volume 1 – Enclosure 9**) to include only a review of the trade-offs between any expected additional risk from the decreased sideflash separation distance and any expected increased safety due to the compensatory measures. **(T-1).** Develop on a case-by-case basis and in coordination with AFSEC/SEW, the requirements necessary to complete this assessment.

V1.E3.7.1.1.3. **(Added)(AF)** For non-QD waivers from HERO requirements, modify the requirement for a risk assessment (see **Volume 1 – Enclosure 9**) to include only a detailed technical evaluation of the electromagnetic hazards and electrically initiated device (EID) sensitivities involved, and a description of the operational need for the non-QD waiver. **(T-1).**

V1.E3.7.1.1.4. **(Added)(AF)** For non-QD waivers from paragraphs **V1.E3.7.1.1.2.** and **V1.E3.7.1.1.3.**, there is an additional requirement for a signed statement with the authority to accept any increased risk and acknowledge responsibility for any consequences resulting from performing operations under this deviation. **(T-1).**

V1.E3.7.2. **(Added)(AF)** MAJCOMs determine the criteria to identify, track and review base level non-QD waivers.

V1.E3.7.3. **(Added)(AF)** MAJCOMs will determine and document approval levels for all other non-QD waivers.

V1.E3.7.4. **(Added)(AF)** Document non-QD waivers using a memorandum format and include information requirements listed in section **V1.E3.5.**, as applicable.

V1.E3.7.5. **(Added)(AF)** Commanders responsible for the non-QD waivers will ensure they are reviewed every two years per MAJCOM guidance. **(T-2).**

V1.E3.8. (ADDED)(AF) SECRETERIAL EXEMPTIONS OR CERTIFICATIONS INFORMATION REQUIREMENTS.

V1.E3.8.1. **(Added)(AF)** This paragraph applies to all waivers and exemptions requiring Secretarial risk acceptance or new construction approval. To expedite processing of a HSS through SECAF, a standardized format is essential. Units seeking SECAF-level approval for waivers and exemptions will submit all required information electronically. **(T-1).** Include all HSS information specified in **Volume 1 – Enclosure 5** for site plan approval. Provide the following to ensure SECAF has the necessary information to make an informed risk decision.

V1.E3.8.2. **(Added)(AF)** MAJCOM/CC or CV/CD Memorandum. This memorandum requests Secretarial approval for the subject waivers or exemptions. It will contain specific strategic or compelling operational reasons necessary to support the request, validate reasonable measures were explored to mitigate or eliminate the explosives hazard, contain concurrence of risk below the MAJCOM level, acceptance of risk at the MAJCOM level, and, if applicable, proof of host-nation notification was consistent with international legal considerations.

V1.E3.8.3. **(Added)(AF)** Explosives QD Map. Provide a map detailing the spatial relationship between the PES and ES with QD deviations. **(T-1).**

V1.E3.8.4. **(Added)(AF)** Explosives Safety Risk Assessment. Combine all PES and ES QD violations in one assessment and include the following:

V1.E3.8.4.1. **(Added)(AF)** Waiver or exemption identification tracking numbers for each PES and ES violation. **(T-1).**

V1.E3.8.4.2. **(Added)(AF)** Likelihood, exposure, consequence, risk assessment level and approval authority. **(T-1).**

V1.E3.8.4.3. **(Added)(AF)** Specific standard not met. Cite the specific reference in this manual requiring the waiver or exemption. **(T-1).** Provide sufficient information to explain the nature of the exemption or waiver (e.g., inhabited building distance (IBD), public traffic route distance (PTRD), etc.), distance actual and the distance required.

V1.E3.8.4.4. **(Added)(AF)** Risk report identifying the expected explosives reaction effects to the ES; e.g., personnel, resources and facility, and estimated value of any property placed at risk. **(T-1).**

V1.E3.8.5. **(Added)(AF)** Justification – Options Considered – Corrective Actions. The agency responsible for introducing the PES or ES not meeting QD standards will provide:

V1.E3.8.5.1. **(Added)(AF)** A detailed explanation of the "strategic or compelling operational" reason for requesting the SECAF-level waiver or exemption. **(T-1).** A strategic reason relates to a national security, national defense, or military strategy. Joint doctrine defines strategy as a prudent idea, or set of ideas, for employing the instruments of national power in a synchronized and integrated fashion to achieve theater, national or multinational objectives. Issuance of an explosives safety waiver or exemption may be necessary to achieve a particular military strategic objective. A compelling reason is any other reason which would convince proper Air Force authority that something must be done. Ease of operation or convenience are not reasons for requesting a deviation.

V1.E3.8.5.2. **(Added)(AF)** Identify options considered to mitigate or eliminate the explosives hazard. **(T-1).** In the context of an explosives safety waiver or exemption, an option is reasonable if it is neither extreme nor excessive in light of the risk. Discuss any and all actions taken to mitigate or eliminate the effects of an explosives mishap. Consider such things as building techniques, personnel evacuation, tiered siting, or planned construction. If no options were feasible to mitigate or eliminate the current explosives hazard, state so and provide justification.

V1.E3.8.5.3. **(Added)(AF)** Corrective actions. Identify the proposed action or actions planned to ultimately correct the waiver or exemption. **(T-1).** A corrective action is feasible if it is capable of being accomplished using available resources within the time required. Several corrective actions, any one of which may correct the waiver or exemption, may be pursued at the same time. For each corrective action being pursued, provide associated cost estimate and schedule for completion. Installation safety staff will keep copies of supporting documentation for corrective actions being pursued. **(T-1).** Fully discuss all reasonable actions considered by the unit but rejected in favor of the proposed action. Give details as to why each of the other actions were not chosen. Discuss limitations to funding, real estate, or other constraints, as appropriate. If no actions are taken, justify why none can currently be implemented (e.g., cost, mission impact).

V1.E3.8.6. **(Added)(AF)** Legal Review. When a legal review is required, it will be provided by the approval authorities staff judge advocate. See Table **V1.E3.T4.** for legal review guidance for international locations.

V1.E3.8.7. **(Added)(AF)** Host-Nation Notification. If applicable, see paragraph **V1.E3.1.5.**

V1.E3.8.8. **(Added)(AF)** Options. Discuss fully all reasonable options considered by the unit but rejected in favor of the proposed action. Give details as to why each of the other options was not chosen. Discuss limitations to funding, real estate, or other constraints, as appropriate.

V1.E3.9. (ADDED)(AF) WAIVER AND EXEMPTION DECISION NOMOGRAPH.

V1.E3.9.1. **(Added)(AF)** The waiver and exemption decision nomograph is a tool to assess risk and determine the appropriate authority level for acceptance of risk at all locations for deviations from mandatory QD requirements.

V1.E3.9.2. **(Added)(AF)** Approval levels for operations within the United States (i.e., the fifty states, the District of Columbia, and U.S. territories). Consequence-based approval levels for these locations range from SECAF down to wing commander or installation commander level. The following are the required approval levels for each risk assessment level as specified in Figure **V1.E3.F2.**

V1.E3.9.2.1. **(Added)(AF)** Extremely High, SECAF. MAJCOM/CC or CV/CD may accept risk at this level for temporary QD departures to construction workers (see paragraph **V1.E3.4.3.**).

V1.E3.9.2.2. **(Added)(AF)** High, MAJCOM/CC or CV/CD.

V1.E3.9.2.3. **(Added)(AF)** Medium, NAF/CC or CV/CD. Where NAFs do not exist, MAJCOMs will identify an alternate intermediate command level between wing and MAJCOM; if there is no intermediate command level, MAJCOM approval is required in place of NAF.

V1.E3.9.2.4. **(Added)(AF)** Low, wing commander or installation commander. This risk decision authority may not be further delegated below wing or installation commander level. If there is no wing or installation command level, then NAF/CC or CV/CD or MAJCOM/CC or CV/CD approval is required.

V1.E3.9.3. **(Added)(AF)** Approval levels for operations outside of the United States (i.e., the fifty states, the District of Columbia, and U.S. territories). Consequence-based approval levels for these locations will follow the Chairman of the Joint Chiefs of Staff Instruction (CJCSI) 4360.01B and Geographic Combatant Commander's supplemental guidance, see **Volume 6 – Enclosure 3** of this manual for additional guidance. If the Geographic Combatant Commander delegates risk decision authority to the MAJCOM commander, the command may also use the medium and low risk approval levels specified in paragraphs **V1.E3.9.2.3.** and **V1.E3.9.2.4.**

V1.E3.9.4. **(Added)(AF)** Elevation Authority. USAF/SE may elevate any QD deviation to the Air Force Chief of Staff for informational purposes.

V1.E3.9.5. **(Added)(AF)** During the initial stages of operations at contingency operating locations, follow Geographic Combatant Commander supplemental guidance to CJCSI 4360.01B to address DoD military munitions-related risk and consequence management.

V1.E3.9.6. **(Added)(AF)** The nomograph is a two-step process. First, conduct a risk assessment to categorize the level of risk. Then plot the criteria on the nomograph and determine the approval level.

V1.E3.9.7. **(Added)(AF)** Risk Assessment. Risk levels are calculated based on three criteria:

V1.E3.9.7.1. **(Added)(AF)** Likelihood. The likelihood of a mishap is the relative probability an explosives mishap may occur based on the type of explosives involved, the level

of activity at the PES, and external threats to the location. Each excepted PES is categorized according to one of the five likelihood levels identified in Table **V1.E3.T1.** Contact AFSEC/SEW when Table **V1.E3.T1.** fails to describe explosive operations or locations adequately.

V1.E3.9.7.2. **(Added)(AF)** Exposure. Exposure is the amount of time personnel and resources at an ES are exposed to a PES. It is expressed as man-hours per year. Use Table **V1.E3.T2.** to categorize each excepted ES.

V1.E3.9.7.3. **(Added)(AF)** Severity. The possible severity of an explosives mishap is based on the worst-case type and amount of explosives present, the construction of both the PES and ES, and the distance between the PES and ES. Information in **Volume 1 – Enclosure 8** is used to estimate the potential damage and injuries from a mishap explosion. Severity is categorized based on the effect on personnel, mission capability, and other resources according to Table **V1.E3.T3.**

V1.E3.9.8. **(Added)(AF)** Plotting the Nomograph. Each deviation pair has three data points as defined in paragraph **V1.E3.9.7.** Plot each data point on the applicable nomograph. Draw a straight line from the center of the Likelihood point through the center of the Exposure point to the Pivot Line. From this point on the Pivot Line, draw a straight line through the center of the Severity point to the Risk Assessment Level line.

Table V1.E3.T1. (Added)(AF) Likelihood of a Mishap.

Category Likelihood	Storage	Maintenance, Inspection, Assembly, Disassembly	Operations	Transportation	Destruction	Testing
Possible. Over a typical career, a mishap can be expected to occur on an intermittent basis within the USAF.		Dangerously unserviceable items awaiting destruction.				Initial tests of new systems.
Seldom. Over a typical career, a mishap can be expected to occur randomly within the USAF.	Any operating stocks in an area subject to hostile action such as rockets, missiles, air attacks, or terrorists.	Any operating location in an area subject to hostile actions such as rockets, missiles, air attacks, or terrorists.	Any explosives operations in an area subject to hostile actions such as rockets, missile, air attacks, or terrorists.			
	Dangerously unserviceable items awaiting destruction.	Hazardous environments with gases, fibers, etc.				
Unlikely. Over a typical career, a mishap can be expected to occur infrequently within the USAF.		Unserviceable (but not dangerous) items.	TDY operations during exercises, contingencies, or alert.		Burning, detonation, and static firing areas.	
		Circuit checks.	Hot Cargo Missions of unserviceable or unpackaged material.			
		TDY during contingencies or exercises.				
Improbable. Over a typical career, a mishap will rarely occur within the USAF.	Operating stocks in storage requiring handling more than once each month.	Home station during contingencies or exercises.	Home station activities during exercises, contingencies or alert.	Railheads requiring application of QD.		Testing operational systems.
	Unserviceable (but not dangerous) items in storage.	Pyrotechnics.	TDY operations during peacetime.			
		Functional tests not placing voltage across firing circuits.	Flightline holding areas or ready service storage locations outside munitions storage areas.			
		Outdoor operations during inclement weather.	Deployed ground-based missile meant to be employed in a non-mobile mission for offensive or defensive purposes.			
Practically Impossible. So rare, a mishap is not expected to occur during a typical career.	Serviceable items in extended storage requiring handling less than once each month.	Paint and packing.	Home station flightline explosive activities during peacetime.			
		Operations involving no exposed explosives.	ICBM Launch Facilities.			
			Hot Cargo Missions of serviceable packaged material.			

Table V1.E3.T2. (Added)(AF) Exposure.

CATEGORY	***LIMITS***	***EXAMPLE***
Rare	*≤ 48 man-hours per year*	*Three people @ two workdays per year OR one person @ six workdays per year*
Unusual	*≤ 288 man-hours per year*	*Three people @ one workday per month OR 36 people @ one workday per year*
Occasional	*≤ 1,248 man-hours per year*	*Three people @ one workday per week OR one person @ three workdays per week*
Frequent	*≤ 10,440 man-hours per year*	*10 people @ four hours per day OR 260 people @ five days per year*
Continuous	*≥ 10,441 man-hours per year*	*10 people @ eight hours per day OR 260 people @ 10 days per year*

Table V1.E3.T3. (Added)(AF) Explosive Mishap Severity.

RESOURCE	CATASTROPHIC	CRITICAL	MARGINAL	NEGLIGIBLE
Buildings	- Separation is ≤ IMD - Unstrengthened buildings will suffer severe structural damage approaching total destruction - Mission curtailed - Costs equal to or greater than $2,000,000 loss	- Separation is > IMD or equal to ILD - Unstrengthened buildings will suffer at least 50 percent damage and could approach total destruction - Mission interrupted - $500,000 but less than $2,000,000 loss	- Separation is > ILD or equal to incremental PTR - Unstrengthened building loss expected to equal at least 20 and as much as 50 percent - Mission degraded - $50,000 but less than $500,000 loss	- Separation is ≥ full PTR but < IBD separation - Unstrengthened building loss expected to equal approximately 5 - 10 percent of the replacement costs - Mission unaffected - Must be less than $50,000 loss
Personnel (Unrelated)	- Separation is IMD or less - ≤ K11; ≥ 8 pounds per square inch (psi) overpressure - Personnel are likely to be seriously injured due to blast, fragments, debris, and translation (i.e., being struck against hard objects) - A 20 percent or better chance of eardrum rupture	- Separation is ILD or less - ≤ K18; ≥ 3.5 psi overpressure - A 2 - 15 percent chance of eardrum damage - Personnel may suffer serious injuries from fragments, debris, firebrands, or other objects	- Separation is greater than ILD or equal to incremental PTR - Occupants of exposed, unstrengthened structures may be injured by blast effects, building debris and displacement or suffer temporary hearing loss	- At least full PTR but less than IBD - Occupants of exposed, unstrengthened structures may be injured by secondary blast effects, such as falling building debris - Personnel in the open are not expected to be killed or seriously injured by blast effects but, fragments and debris may cause some injuries
Personnel (Related)	- Separation is barricaded ILD or less - ≤ K9; ≥ 12 psi overpressure - Personnel will be subjected to serious injury or death from direct blast, building collapse, or translation (i.e., being struck against hard objects)	- Separation is IMD or less - ≤ K11; ≥ 8 psi overpressure - Personnel are likely to be seriously injured due to blast, fragments, debris, and translation (i.e., being struck against hard objects) - A 20 percent or better chance of eardrum rupture	- Separation is less than ILD - < K18; >3.5 psi overpressure - A 2-15 percent chance of eardrum damage - Personnel may suffer serious injuries from fragments, debris, firebrands, or other objects	- Separation is ≥ to ILD but < IBD - > K18; ≤ 3.5 psi overpressure - A 2 percent chance of eardrum damage - Personnel may suffer injuries from fragments, debris, firebrands, or other objects
Vehicles (Unrelated)	- < K9; >12 psi - Barricaded Aboveground Magazine Distance - K6; ≥ 27 psi -- Vehicles will be overturned and crushed by the blast - Costs equal to or greater than $2,000,000 loss	- Separation is barricaded ILD but < ILD - K9; 12 psi, but < K18; >3.5 psi - Vehicles will be heavily damaged, probably to the extent of total loss or severely damaged with minor engine damage, and total glass breakage - $500,000 but less than $2,000,000 loss	- Separation is ≥ ILD but < incremental PTR - K18; 3.5 psi, but < K24; >2.3 psi - Vehicles will incur extensive, but not severe, body and glass damage consisting mainly of body panel dishing, and cracks in shatter resistant windows - $50,000 but less than $500,000 loss	- Separation is ≥ incremental PTR but < full PTR - K24 - K30; 2.3 - 1.7 psi - Vehicles should suffer little damage, unless they are hit by a fragment or the blast causes a momentary loss of control - Must be less than $50,000 loss

Table V1.E3.T3. (Added)(AF) Explosive Mishap Severity, Continued.

Aircraft	**PARKED AIRCRAFT** **-** < K18; >3.5 psi thru K11; 8 psi **--** Aircraft will be damaged heavily by blast and fragments; destruction by resulting fire is likely **-** Barricaded ILD; K9; 12 psi **--** Aircraft will be damaged beyond economical repair both by blast and fragments **-** Barricaded AGM; K6; 27 psi **--** Aircraft will be destroyed by blast, thermal, and debris effects - Mission curtailed - Costs equal to or greater than $2,000,000 loss	**AIRCRAFT IN FLIGHT** **-** K30; 1.7 psi -- Aircraft that are landing or taking off may lose control and crash **PARKED AIRCRAFT** **-** < K24; > 2.3 psi thru K18; 3.5 psi -- Aircraft are expected to suffer considerable structural damage from blast -- Fragments and debris are likely to cause severe damage - Mission interrupted - $500,000 but less than $2,000,000 loss	**PARKED AIRCRAFT** - < K30; >1.7 psi thru K24; 2.3 psi -- Aircraft may suffer some damage to the fuselage from blast and possible fragment penetration, but must be operational with minor repair - Mission degraded - $50,000 but less than $500,000 loss	**PARKED AIRCRAFT** **-** ≥ K30; ≤ 1.7 psi -- Parked military and commercial aircraft will likely sustain minor damage due to blast, but must remain airworthy - Mission unaffected - Must be less than $50,000 loss

Table V1.E3.T4. (Added)(AF) Explosives Safety Waiver or Exemption Review Elements International Legal Considerations.

Ask: Is this a location outside of the United States (e.g., the fifty states, the District of Columbia, and the U.S. Territories)? If the answer is yes:
1. International agreements related to the U.S. presence or activities must be examined to identify if there are any relevant provisions pertaining to explosives safety waivers or exemptions in order to ensure obligations of the United States and foreign partners are met. **(T-1).** The legal review must be accomplished and should list and address any applicable agreements. **(T-1).**
2. The legal review should identify any relevant notification or approval requirements which may be found in basing agreements, SOFAs, or other agreements.
• The legal review should identify whether notification or approval is required by any international agreements. If there are none for a particular location, the legal review should state there are no relevant international agreements or notification or approval requirements.
• The legal review should indicate what notice or approval was obtained by the relevant commander or the delegated authority, how that notice or approval was conveyed, and address how this met all applicable requirements under the applicable agreement(s) or was made in accordance with DESR 6055.09_AFMAN 91-201, paragraph **V1.E3.1.5.**
• If the international agreements with the host-nation are silent on notification or approval of explosives safety waivers and exemptions, notification is to be made in accordance with DESR 6055.09_AFMAN 91-201, paragraph **V1.E3.1.5.**
• The legal opinion should address any other relevant obligations to the host-nation.
• Source: DESR 6055.09_AFMAN 91-201, paragraph **V1.E3.1.5.**

V1.E3.10. (ADDED)(AF) PERIODIC REVIEWS FOR WAIVERS AND EXEMPTIONS.

V1.E3.10.1. **(Added)(AF)** Commanders will ensure periodic reviews of waivers and exemptions are documented (T-1), and include the following:

V1.E3.10.1.1. **(Added)(AF)** Confirmation of the continued existence of the waiver or exemption. **(T-1).**

V1.E3.10.1.2. **(Added)(AF)** Verification of the accuracy of the previous data associated with the waiver or exemption. **(T-1).**

V1.E3.10.1.3. **(Added)(AF)** Validation of the strategic or compelling operational reasons for initial approval of the waiver or exemption. **(T-1).**

V1.E3.10.1.4. **(Added)(AF)** Validation that mitigating actions and stipulations are still in force. **(T-1).**

V1.E3.10.1.5. **(Added)(AF)** Reassessment of proposed corrective actions. Identify any changes to proposed corrective actions and the reasons for those changes. **(T-1).**

V1.E3.10.1.6. **(Added)(AF)** Current cost estimates for proposed corrective actions, if available. **(T-1).**

V1.E3.10.1.7. **(Added)(AF)** Status of progress towards accomplishing corrective actions and eliminating the waiver or exemption. **(T-1).**

V1.E3.10.1.8. **(Added)(AF)** Estimated date and schedule for completion of corrective actions. **(T-1).**

V1.E3.10.2. **(Added)(AF)** Submit copies of periodic review documentation through command channels to AFSEC/SEW.

V1.E3.10.3. **(Added)(AF)** Use the periodic review documentation to advocate funding, and other support required, for corrective action implementation.

V1.E3.10.4. **(Added)(AF)** Approval Levels for Reviews.

V1.E3.10.4.1. **(Added)(AF)** Reviews of non-QD waivers from paragraph **V2.E4.2.1.** "Sideflash Protection" or AFI 91-208 for "Modern Mobile Emitters (MME)" and any or all of its paragraphs, must be formally approved by AFSEC/SEW. **(T-1).**

V1.E3.10.4.2. **(Added)(AF)** MAJCOMs will determine and document approval levels for periodic review of all other waivers or exemptions.

V1.E3.10.4.3. **(Added)(AF)** Commanders will ensure waivers or exemptions are reviewed at the original approval level. **(T-1).** However, if PES to ES data has changed, reapply the nomograph to determine the approval level.

V1.E3.10.4.4. **(Added)(AF)** When completion of the corrective actions associated with a waiver exceeds 5 years, the next higher approval level must reissue a new waiver (unless last approved by SECAF). **(T-1).**

V1.E3.10.5. **(Added)(AF)** Cancellation of Waivers and Exemptions. Units will notify MAJCOM's who will in turn notify AFSEC/SEW of waivers and exemptions no longer needed according to procedures outlined in MAJCOM supplements. **(T-1).**

VOLUME 1 – ENCLOSURE 4: ACCIDENT NOTIFICATION AND REPORTING REQUIREMENTS

V1.E4.1. SCOPE.

V1.E4.1.1. Enclosure 8 of DoD Instruction (DoDI) 6055.07 identifies the accidents that must be reported to the DDESB. Accident notifications and reports must be prepared in accordance with implementing regulations to DoDI 6055.07. This reporting requirement has been assigned report control symbol (RCS) DD-AT&L(AR)1020 in accordance with Volume 1 of DoD Manual (DoDM) 8910.01.

V1.E4.1.2. This enclosure describes the minimum data that accident notifications and reports submitted to the DDESB must include. Submit any missing data in subsequent reports.

V1.E4.1.3. Other reporting and record-keeping requirements of DoDI 6055.07 (e.g., reporting to Occupational Safety and Health Administration (OSHA), injury record-keeping) are unchanged by requirements to report to the DDESB. All workplace mishaps involving injury or illness to employees or government property damage, regardless of the extent of injury or damage costs, will be reported to the employee's supervisor and tracked in accordance with DoDI 6055.07.

V1.E4.1.4. Regardless of format, accident notifications and reports that contain similar data and are prepared in compliance with DoD Component criteria will satisfy these requirements.

V1.E4.1.5. Before submittal, the cognizant claims officer must review all accident notifications, reports, and data submitted pursuant to this enclosure to ensure the notification or report does not contain unsupported admissions or speculation that could cause harm to the government.

V1.E4.1.6. These notice and reporting requirements are in addition to, and not in place of, those required by applicable federal, State, interstate, and local laws and regulations.

V1.E4.1.7. All information accumulated pursuant to this enclosure will be collected, maintained, and used in compliance with DoD 5400.11-R.

V1.E4.2. SECURITY CLASSIFICATION. When possible, accident notifications and reports should be unclassified to ease dissemination of safety information to the DoD Components, industry, and friendly governments.

V1.E4.3. ACCIDENT NOTIFICATION REQUIREMENTS. The DoD Components must provide this data to the DDESB as soon as practical:

V1.E4.3.1. Name and location of the reporting activity.

V1.E4.3.2. Location of accident (activity, city, installation, building number or designation, road names, or similar information).

V1.E4.3.3. Item nomenclature or description (e.g., mark, model, federal supply class, national identification number, DoD identification code, Navy ammunition logistic code, ammonium nitrate/fuel oil).

V1.E4.3.4. Quantity involved (number of items and NEWQD).

V1.E4.3.5. Day, date, and local time of initial significant event and when discovered.

V1.E4.3.6. Narrative of the event (include type of operation involved).

V1.E4.3.7. Number of fatalities (military, DoD civilian, or other civilian).

V1.E4.3.8. Number of persons injured (military, DoD civilian, or other civilian).

V1.E4.3.9. Description of material damage (government or nongovernment).

V1.E4.3.10. Immediate action taken or planned (corrective, investigative, or explosive ordnance disposal (EOD) assistance).

V1.E4.3.11. Details of any CA hazard or contamination, if applicable.

V1.E4.3.12. Description of news media attention.

V1.E4.3.13. **(Added)(AF)** Names and contact information for witnesses to the accident.

V1.E4.4. ACCIDENT REPORTS. In addition to the accident notification data, the accident reporting data, as applicable, must be provided to the DDESB when accident investigations are concluded. CA accidents also require the inclusion of the data specified in section **V1.E4.5.**

V1.E4.4.1. Event Circumstances. Identify the type of operation or transportation mode engaged in at time of the accident. Include reference to applicable standard operating procedure (SOP) or regulatory document.

V1.E4.4.1.1. Description of accident.

V1.E4.4.1.2. Quantity, type, lot number, configuration, and packaging of AE or CAs involved in the accident.

V1.E4.4.1.3. Type of reaction or reactions.

V1.E4.4.1.3.1. Single reaction, such as detonation, deflagration, fire, release, or activation.

V1.E4.4.1.3.2. Multiple reaction, such as detonation and fire.

V1.E4.4.1.3.3. Communication of reactions, such as fire-caused fire, fire-caused detonation, and detonation-caused detonation, as well as the time between events.

V1.E4.4.1.4. Possible or suspected causes.

V1.E4.4.2. Event Effects. A copy of aerial and ground photographs taken of the accident site must be submitted to the DDESB as soon as possible after the occurrence. When applicable, include photographs (color, whenever possible), maps, charts, and overlays showing or listing:

V1.E4.4.2.1. Number of persons killed or injured (military, DoD civilian, or other civilian). Indicate cause of fatalities and injuries, and location of affected persons with respect to the accident origin.

V1.E4.4.2.2. Property damage at the accident origin (government or nongovernment).

V1.E4.4.2.3. Area containing property completely destroyed.

V1.E4.4.2.4. Area containing property damaged beyond economical repair.

V1.E4.4.2.5. Area containing repairable property damage.

V1.E4.4.2.6. Radii of glass breakage. When possible, include type and dimensions of glass broken at farthest point.

V1.E4.4.2.7. Locations and dimensions of craters.

V1.E4.4.2.8. When direct propagation has occurred, distances from the accident origin and whether propagation resulted from blast, fragments, or firebrands.

V1.E4.4.2.9. Approximate number, size, and location of hazardous fragments and debris.

V1.E4.4.2.10. Effect on production, operation, mission, or other activity.

V1.E4.4.3. Factors Contributing to or Limiting Event Effects. When applicable, describe the influence of these factors on the accident:

V1.E4.4.3.1. Environmental and meteorological conditions (e.g., lightning, cloud cover, wind direction and velocity, temperature, relative humidity, electromagnetic radiation, and electrostatic buildup or discharge).

V1.E4.4.3.2. Topography (e.g., hills, forests, and lakes).

V1.E4.4.3.3. Structural features at the accident origin (e.g., exterior and interior walls and bulkheads, roofs and overheads, doors and hatches, cells or magazines, earth cover, and barricades).

V1.E4.4.3.4. Safety features, other than structural, at the accident origin (e.g., remote controls, sprinkler or deluge systems, detectors, alarms, blast traps, and suppressive shielding).

V1.E4.4.4. Structures. When applicable, provide position, orientation, and type of construction of all structures, damaged or not, located within the maximum radius of damage or the applicable quantity-distance (QD), whichever is greater.

V1.E4.4.5. Vessels, Vehicles, and Mobile Equipment. When applicable, provide their location within the maximum radius of damage, or the applicable QD requirement, whichever is greater.

V1.E4.4.6. Personnel. When applicable, provide their location within the maximum radius of damage, or the applicable QD requirements, whichever is greater.

V1.E4.4.7. AE and CAs. When applicable, provide the location, type, configuration, and amounts of AE and CAs in adjacent locations, and describe the protection provided by structures at adjacent locations. This information is required out to the maximum radius of damage to any AE or CAs, or the applicable intermagazine distance (IMD) or intraline distance (ILD) requirements, whichever is greater.

V1.E4.4.8. Prevention of Future Accidents. Provide to the DDESB any supporting analyses, conclusions as to the cause(s) of the accident, and recommendations to prevent future accidents of a similar nature.

V1.E4.5. CA ACCIDENTS. In addition to the data required by section **V1.E4.4.**, each CA accident report must contain:

V1.E4.5.1. Personnel

V1.E4.5.1.1. CA safety training received.

V1.E4.5.1.2. The availability, type, and use of protective equipment.

V1.E4.5.1.3. A description of the emergency measures taken or performed at the scene of the accident.

V1.E4.5.1.4. A summary of applicable medical data.

V1.E4.5.1.5. A diagram showing locations where injuries occurred and indicating the distance and direction from the agent source.

V1.E4.5.2. Accident Area. The environmental and meteorological data required at the accident site by paragraph **V1.E4.4.3.1.** In addition, provide:

V1.E4.5.2.1. Facility filter types and facility ventilation and air turnover rates.

V1.E4.5.2.2. Rate and manner of agent release and any other data used to determine the downwind hazard.

V1.E4.5.2.3. Status and disposition of any CAs remaining at the accident site.

V1.E4.5.2.4. Details of any remaining CA hazard and contamination, if applicable.

VOLUME 1 – ENCLOSURE 5: REQUIRED EXPLOSIVES SAFETY SUBMISSIONS (ESSS)

V1.E5.1. ESS CATEGORIES. Refer to DoDI 6055.16 for descriptions of the possible categories of ESSs.

V1.E5.2. SITE AND GENERAL CONSTRUCTION PLANS REVIEW

V1.E5.2.1. Submission of Plans. These site and general construction plans must be submitted to the DDESB for review and approval:

V1.E5.2.1.1. New construction of:

V1.E5.2.1.1.1. AE facilities. See the Glossary for the definition of "AE facility."

V1.E5.2.1.1.2. Non-AE related facilities within QD arcs.

V1.E5.2.1.1.3. **(Added)(AF)** Non-explosives facilities within an explosives clear zone.

V1.E5.2.1.2. Facility modifications, change of mission, or change of operations that increase explosive hazards (e.g., personnel exposures, NEW, change in HD, nature of operation).

V1.E5.2.1.2. **(Added)(AF)** See paragraph **V1.E5.2.1.11.**

V1.E5.2.1.3. Change of use of non-AE related facilities that requires application of more stringent explosives safety criteria (e.g., an airfield previously restricted to DoD use only changed to joint DoD and non-DoD use).

V1.E5.2.1.3. **(Added)(AF)** See paragraph **V1.E5.2.1.11.**

V1.E5.2.1.4. **(Added)(AF)** Recurring training and exercise explosives activities occurring in fixed locations, except as allowed in paragraph **V1.E5.3.13.**

V1.E5.2.1.5. (Added)(AF) Purpose of Explosives Site Planning. Explosives site planning is a process used to manage the risks associated with explosives activities to ensure the minimum risk to personnel, equipment, and assets, while meeting mission requirements.

V1.E5.2.1.5.1. **(Added)(AF)** Planning for the proper location and construction of PESs, and ESs exposed to PESs, is a key element of the explosives site planning process.

V1.E5.2.1.5.2. **(Added)(AF)** This process also ensures that risks above those normally accepted for explosives activities are identified and presented to the appropriate

commander for approval. The explosives site planning process is applicable to enduring and non-enduring locations (see **Volume 6 – Enclosure 3**).

V1.E5.2.1.6. (Added)(AF) Responsibilities for Explosives Site Planning. Safety, in coordination with civil engineering, fire, health, security, legal, and environmental agencies, is responsible for performing explosives site planning.

V1.E5.2.1.7. (Added)(AF) Explosives Clear Zones.

V1.E5.2.1.7.1. **(Added)(AF)** The explosives clear zone is the area surrounding a PES as determined by the required inhabited building (IB) separation.

V1.E5.2.1.7.2. **(Added)(AF)** The IB separation is based on the sited, waivered, exempted, or actual explosives limits of the PES, whichever is greatest.

V1.E5.2.1.8. (Added)(AF) Monitoring of Explosives Clear Zones.

V1.E5.2.1.8.1. **(Added)(AF)** Safety and civil engineering will monitor and control construction and facility utilization inside explosives clear zones. **(T-1).**

V1.E5.2.1.8.2. **(Added)(AF)** Management of explosives safety clear zones is a cornerstone of the explosives site planning process.

V1.E5.2.1.9. (Added)(AF) Mapping Requirements for Explosives Clear Zones.

V1.E5.2.1.9.1. **(Added)(AF)** Explosives clear zones for all approved ESPs will be reflected on the installation Comprehensive Plan Maps IAW DoDI 8130.01 and AFI 32-10112. **(T-0).**

V1.E5.2.1.9.2. **(Added)(AF)** Explosives clear zones must reflect the DDESB-approved NEW and IB distance. **(T-1).**

V1.E5.2.1.9.3. **(Added)(AF)** The WSM assists civil engineering in determining the explosives clear zones required on appropriate base maps.

V1.E5.2.1.9.4. **(Added)(AF)** Do not change explosives clear zones on installation maps when they are expanded for a short-term situation (one year or less), such as an event waiver lasting less than a year.

V1.E5.2.1.10. (Added)(AF) Funding for Projects Requiring an ESP.

V1.E5.2.1.10.1. **(Added)(AF)** Prior to approval of an ESP, expend only limited Air Force funds on the ESP project. **(T-1).**

V1.E5.2.1.10.2. **(Added)(AF)** All funds spent prior to ESP approval may be placed at risk if explosives safety standards are not followed properly. The investment could be lost if

ESP approval is contingent on changes or new facility requirements that were not considered or adequately addressed during the ESP preparation and review process.

V1.E5.2.1.10.3. **(Added)(AF)** It is strongly suggested that at least preliminary ESP approval be obtained before awarding a contract for new construction of explosives facilities or non-explosives facilities within an explosives clear zone (see paragraph **V1.E5.2.1.13.**).

V1.E5.2.1.11. (Added)(AF) Facility Modifications or Change in Use. Existing explosives facilities and exposed facilities within explosives clear zones may require modification or change in use to meet changing mission requirements. Evaluate such modifications and changes in use to determine if they affect the application of explosives safety requirements as approved in the original ESP. **(T-1).**

V1.E5.2.1.11.1. **(Added)(AF)** Develop and submit a new ESP if the facility modification or change in use involves the following:

V1.E5.2.1.11.1.1. **(Added)(AF)** A change in the classification of the facility for QD purposes (e.g., an explosive storage facility is changed to an operating location). **(T-1).**

V1.E5.2.1.11.1.2. **(Added)(AF)** Changes in HD, NEWQD or NEW for intentional detonation sites. **(T-1).**

V1.E5.2.1.11.1.3. **(Added)(AF)** Changes impacting the explosives clear zone (increase or reduction). **(T-1).**

V1.E5.2.1.11.1.4. **(Added)(AF)** Increase in overall floor space, to include vertical additions. **(T-1).**

V1.E5.2.1.11.1.5. **(Added)(AF)** Introduction of additional personnel performing a different function. **(T-1).**

V1.E5.2.1.11.1.6. **(Added)(AF)** Compromise of the effectiveness of built-in safety features (e.g., opening is made in a substantial dividing wall (SDW)). **(T-1).**

V1.E5.2.1.11.1.7. **(Added)(AF)** The installation of a new lightning protection (LPS) system or the modification to an existing LPS. **(T-1).**

V1.E5.2.1.11.2. **(Added)(AF)** For other modifications or changes in use submit a memorandum describing the facility modification or change in use to the MAJCOM. The MAJCOM will ensure the facility modification or change in use does not affect the explosives safety criteria applied in the original ESP and submits the change to AFSEC/SEW to formally amend the ESP. **(T-1).**

V1.E5.2.1.11.3. **(Added)(AF)** For ESPs where no construction is involved, do not start explosives operations or non-explosives operations within explosives clear zones until an

event waiver is approved per **Volume 1 – Enclosure 3** or an ESP is approved by the DDESB. **(T-1).**

V1.E5.2.1.12. (Added)(AF) ESP Development and Installation-Level Coordination.

V1.E5.2.1.12.1. **(Added)(AF)** The civil engineer or facility user notifies weapons safety as soon as a need is identified to build, modify, or change the use of any explosives facility or non-explosives facility located within an explosives clear zone. Weapons safety determines the need for an ESP and solicits the information to prepare the request.

V1.E5.2.1.12.2. **(Added)(AF)** The civil engineer assists safety in development of the ESP by providing current maps or drawings and technical facility design assistance. Also, the civil engineer supplies facility design information such as construction, grounding, technical facility design assistance, and LPS information.

V1.E5.2.1.12.3. **(Added)(AF)** Site for maximum weights based on actual separation distances or capacity for storage locations; however, for other locations site for mission essential quantity (MEQ) or operational limits.

V1.E5.2.1.12.4. **(Added)(AF)** Coordinate the ESP with civil engineering and the user. Coordinate with fire, health, security, legal and environmental agencies, as appropriate.

V1.E5.2.1.12.5. **(Added)(AF)** Coordinate the ESP with Bioenvironmental Engineering if it involves biological and chemical fillers, liquid propellants, toxic gases, sonic hazard areas, any form of electromagnetic radiation, laser or other directed energy weapons affecting health or the environment on-installation (including radioactive sources and microwave generators and industrial x-ray). The MAJCOM will forward an information copy of the ESP to the Air Force Medical Support Agency (AFMSA/SG3PB), 1400 Key Blvd, Suite 400, Arlington VA 22209. **(T-1).**

V1.E5.2.1.12.6. **(Added)(AF)** When tenant facilities, including those of other services, are exposed, coordinate the ESP with the tenant unit. For ESPs that expose host-nation tenant facilities or areas, notify the host-nation commander of the exposure and obtain host-nation approval, taking into account any notification or approval requirements in international agreements or SOFA. **(T-1).**

V1.E5.2.1.12.7. **(Added)(AF)** In cases where the explosives clear zone encroaches onto adjacent government agencies, such as another Air Force, or an Army, Navy or Marine installation, obtain written acknowledgement from the exposed service component for inclusion in the ESP. It will be up to the acknowledging agency to update their maps to reflect the explosives clear zone for their future planning purposes.

V1.E5.2.1.12.8. **(Added)(AF)** Review and approve ESPs involving contractors through the Defense Plant Representative Office, Administrative Contract Office and the Designated Acquisition Official's safety office prior to Air Force processing. **(T-1).** Local level coordinates with responsible contracting officer.

V1.E5.2.1.13. (Added)(AF) ESP Contents. ESPs contain the information described in paragraph **V1.E5.2.3.3.** In some instances, a compressed timeline (such as that imposed by the design and build process) may require contract award or site preparation activities (e.g., facility demolition, grading or other site preparation) before all of the information required in paragraph **V1.E5.2.3.3.** is available. In these instances, request preliminary ESP approval. Preliminary ESPs will include the information required in paragraph **V1.E5.2.3.3.**, except for facility construction drawings and any required structural engineering analyses. **(T-1).** Specifically address the action required for approval (e.g. contract award, facility demolition). Submit a request for final ESP approval as soon as the construction drawings and any required structural engineering analyses are completed.

V1.E5.2.1.14. (Added)(AF) ESP Submission and MAJCOM and Air Force-Level Coordination Process.

V1.E5.2.1.14.1. **(Added)(AF)** The ESP originates at the installation level (see paragraph **V1.E5.2.3.3.2.9.**). The primary means for originating an ESP is the automated Explosives Safety Siting Program. MAJCOM/SEW reviews the ESP for accuracy and compliance with the standards in this manual and applicable MAJCOM supplements. MAJCOMs then electronically submit the coordinated ESP to AFSEC/SEW (unless the ESP is approved by the MAJCOM per paragraph **V1.E5.2.1.15.**). Include a MAJCOM endorsement stating approval along with any changes, modifications or specific precautionary measures considered necessary. After review by AFSEC/SEW, the ESP is endorsed and electronically submitted to the DDESB for approval. Reviewing agencies provide the ESP originator and previous review agency a copy of comments or changes made affecting the original intent of the ESP. Any change affecting the content of the unit's automated Explosives Safety Siting Program database requires updates made at the unit.

V1.E5.2.1.14.1.1. **(Added)(AF)** For nuclear weapons capable facilities, AFSEC/SEW ensures the Air Force Nuclear Safety Design Certification Program has been completed prior to ESP submission to the DDESB (see AFI 91-101).

V1.E5.2.1.14.2. **(Added)(AF)** Air Force Host to Tenant Relationships. ESPs for tenant units are sent through host installation and tenant command channels. In cases where the host violates explosives safety quantity-distance (ESQD) to a tenant facility, the host MAJCOM obtains coordination from the tenant MAJCOM before processing the ESP. Where no QD deviation exists, provide an information copy of the ESP to the tenant MAJCOM when processing to AFSEC/SEW. If required by the tenant MAJCOM, the ESP must meet the requirements of the tenant MAJCOM supplement to this manual. **(T-1).**

V1.E5.2.1.14.3. **(Added)(AF)** Inter-service Host to Tenant Relationships.

V1.E5.2.1.14.3.1. **(Added)(AF)** When an Air Force unit is tenant on an Army, Navy, or Marine installation, request ESP approval through that service. **(T-0).** The ESP must meet the QD requirements of this manual in addition to all host agency criteria. **(T-1).** Submit an information copy of the ESP request through the MAJCOM to AFSEC/SEW.

V1.E5.2.1.14.3.2. **(Added)(AF)** Tenant Army, Navy, or Marine units forward ESP requests through Air Force host installation channels. Air Force host assists tenant units in preparing the ESP. In cases where the Air Force host violates ESQD to a tenant facility, the host MAJCOM obtains coordination from the tenant MAJCOM equivalent before processing the ESP. Where no QD deviation exists, provide an information copy of the ESP to the tenant MAJCOM equivalent when processing to AFSEC/SEW.

V1.E5.2.1.14.3.3. **(Added)(AF)** AFSEC/SEW will coordinate with the applicable service component before processing the ESP. In cases where the Air Force host violates ESQD to a tenant facility, AFSEC/SEW obtains coordination from the applicable service component before processing the ESP. Where no QD deviation exists, an information copy of the ESP is sent to the applicable service component when processing for final approval.

V1.E5.2.1.14.3.4. **(Added)(AF)** AFSEC/SEW coordinates requests for ESP approval with the applicable service component if an Air Force explosives clear zone encroaches onto an adjacent Air Force, Army, Navy, or Marine installation.

V1.E5.2.1.14.3.5. **(Added)(AF)** MAJCOM/SEW may request expeditious AFSEC/SEW processing of an ESP. Requests for expeditious ESP processing will include the information required in paragraph **V1.E5.2.3.3.1.2.18. (T-1).**

V1.E5.2.1.14.3.6. **(Added)(AF)** Nuclear facilities must undergo a nuclear certification process prior to ESP submission (see AFI 63-125). **(T-1).**

V1.E5.2.1.15. (Added)(AF) ESP Approval.

V1.E5.2.1.15.1. **(Added)(AF)** Except as authorized in paragraph **V1.E5.2.1.15.2.**, ESPs are approved by DDESB. ESPs with waivers or exemptions are submitted as HSSs to the DDESB for final approval IAW **Volume 1 – Enclosure 3**. Do not start new construction until authorized by an approved ESP. **(T-1).** Do not commence explosives operations or events unless authorized by an approved event waiver IAW **Volume 1 – Enclosure 3**. **(T-1).** Deviation documentation requirements prescribed in **Volume 1 – Enclosure 3** are addressed in the ESP submission to the MAJCOM and AFSEC/SEW.

V1.E5.2.1.15.1.1. **(Added)(AF)** Once the ESP is reviewed by AFSEC/SEW, AFSEC/SEW submits the ESP to the DDESB or back to the MAJCOM if additional information is needed to gain DDESB approval.

V1.E5.2.1.15.1.2. **(Added)(AF)** If additional criteria is needed to complete the ESP package, provide it within 45 days of AFSEC/SEW initial review comments or provide notification to AFSEC/SEW from the MAJCOM with a status of delay and an estimated response date. **(T-1).**

V1.E5.2.1.15.1.3. **(Added)(AF)** If continued delays are encountered, AFSEC/SEW will return the ESP as disapproved with a detailed explanation of the reason for disapproval. **(T-1).** At this time, the deviation for operations to commence is invalidated. The entire ESP may be resubmitted under a new control number once all criteria are met and included

in the ESP submission. If included in the ESP request, preliminary ESP approval may authorize some construction planning activities to begin per paragraph **V1.E5.2.1.13.**

V1.E5.2.1.15.2. **(Added)(AF)** Approval levels for unique situations are as follows:

V1.E5.2.1.15.2.1. **(Added)(AF)** ESPs for training and exercise areas using flares, simulators, and smoke producing devices (HD 1.2.2, 1.3 and 1.4 only), and not within an established clear zone, are approved by the MAJCOM. This applies to recurring training locations and not to exercise support activities that move each time IAW exercise scenarios. Document required separation distances per paragraph **V5.E3.2.10.6.** for exercise support activities that do not have a fixed location. **(T-1).**

V1.E5.2.1.15.2.2. **(Added)(AF)** MAJCOM/SEWs approve ESPs for installation of weapons storage vaults (WSV) in hardened aircraft shelters (HASs) with previously approved ESPs by the MAJCOM/SEW.

V1.E5.2.1.15.2.3. **(Added)(AF)** The PCO for Air Force contracts involving explosives or ammunition approves ESPs for Contractor Owned Contractor Operated (COCO) facilities on non-government land. The contractor prepares and submits these ESPs. Do not forward these ESPs to either AFMC/SEW, AFSEC/SEW, or the DDESB. The Defense Contract Management Agency evaluates the ESP and provides approval or disapproval recommendations to the PCO.

V1.E5.2.1.15.2.4. **(Added)(AF)** The DDESB approves ESPs for Government Owned Contractor Operated (GOCO) facilities and COCO facilities on government land. Waivers and exemptions are approved by the responsible PCO and Air Force command level as prescribed in **Volume 1 – Enclosure 3**.

V1.E5.2.1.15.2.5. **(Added)(AF)** The DDESB approves ESPs for non-DoD explosives activities on Air Force installations per paragraph **V1.E5.2.1.17.**

V1.E5.2.1.16. (Added)(AF) Maintenance of Approved ESPs. Approved ESPs (including the approval letter) are maintained by the installation safety office.

V1.E5.2.1.17. (Added)(AF) ESPs for Non-DoD Explosives Activities on Air Force Installations.

V1.E5.2.1.17.1. **(Added)(AF)** ESPs for non-DoD explosives activities on Air Force installations will include a risk assessment for all exposed government personnel, equipment, and assets (within or outside the explosives clear zone) and documented risk acceptance by the responsible commander. **(T-1).** The responsible commander must consider the possible impact to current and future DoD mission requirements in the event of a mishap. **(T-1).** Non-DoD user insurance coverage for government equipment and assets will not, by itself, be adequate justification for exposure to unacceptable risk.

V1.E5.2.1.17.2. **(Added)(AF)** ESPs for non-DoD explosives activities on Air Force installations will either be prepared IAW the requirements of this section, or will be "foot print"

only ESPs. **(T-1).** Foot print ESPs contain only the information necessary to determine the explosives clear zone (e.g., do not include building design, LPS, etc., unless it is used to determine the explosives clear zone).

V1.E5.2.1.17.3. **(Added)(AF)** ESP approval alone does not authorize the conduct of non-DoD explosives activities on Air Force installations (see section **V4.E5.21.**).

V1.E5.2.1.17.4. **(Added)(AF)** See section **V4.E5.21.** for QD criteria for non-DoD explosives activities on Air Force installations, and paragraph **V1.E3.1.10.** for guidance on deviations to this manual.

V1.E5.2.1.18. (Added)(AF) Siting a Non-Explosives ES. For new construction, modification, or change in use of non-explosives facilities within an explosives clear zone it is acceptable to submit an ESP for the non-explosives facilities. Comply with all applicable requirements of this section and include QD evaluations for all PESs within the evaluation zone (EZ). **(T-1).** See paragraph **V1.E5.2.3.3.2.4.**, Table **V1.E5.T1.**, and Figure **V1.E5.F1.**

V1.E5.2.1.19. (Added)(AF) ESPs Involving Deviations. Include the information required per **Volume 1 – Enclosure 3** for ESPs involving deviations.

V1.E5.2.1.20. (Added)(AF) Tiered ESPs. Tiered ESPs are useful when the NEWQD of a PES varies because of operational requirements. It may also be useful when it is not practical on a daily basis to meet the required QD separation from a PES to all ESs for the largest possible NEWQD. Under the tiered ESP concept, the responsible commander takes management actions (e.g., removal of personnel or equipment, re-designation of ESs, etc.) before introducing explosives or increasing the NEWQD of a PES. **(T-1).**

V1.E5.2.1.20.1. **(Added)(AF)** To prepare tiered ESPs, determine the NEWQD required for each type of activity at the PES and the QD separation required to each ES for each NEWQD. **(T-1).** In instances where the required QD separation cannot be met at a given NEWQD, determine if management actions may be taken to meet the required QD separation. **(T-1).** If the required QD separation cannot be met even with management actions, process a waiver or exemption IAW **Volume 1 – Enclosure 3**. **(T-1).**

V1.E5.2.1.20.2. **(Added)(AF)** Prepare a management plan to document management actions required for each tier of the ESP. Implement this management plan as a base operations plan, operating instruction, agreement, supplement or other appropriate publication. The management plan must specify:

V1.E5.2.1.20.2.1. **(Added)(AF)** Description of each management action required. **(T-1).**

V1.E5.2.1.20.2.2. **(Added)(AF)** Conditions where each management action is directed and when the action takes place. **(T-1).**

V1.E5.2.1.20.2.3. **(Added)(AF)** The organization responsible for implementing each management action. **(T-1).**

V1.E5.2.1.20.2.4. **(Added)(AF)** Requirement for periodic review of the management plan to ensure continued viability of the planned management actions. **(T-1).**

V1.E5.2.1.20.3. **(Added)(AF)** Tiered ESPs will.

V1.E5.2.1.20.3.1. **(Added)(AF)** Include the ESP or ESS Form for each tier, and assign a separate ESP action number to each tier. **(T-1).**

V1.E5.2.1.20.3.2. **(Added)(AF)** Reference the document implementing the management plan required in paragraph **V1.E5.2.1.20.2.** It is not necessary to include a copy of this document. **(T-1).**

V1.E5.2.2. Vulnerable Facility Construction. Although site plans for construction of vulnerable facilities (e.g., schools, high-rise buildings, restaurants) located on a DoD installation that are outside but near QD arcs are not required, it is recommended that they be submitted to the DDESB for review and comment.

V1.E5.2.3. Site Plan Submission Requirements

V1.E5.2.3.1. Preliminary. When required by the DoD Component, preliminary site plan submissions must include, at a minimum, the information specified in paragraphs **V1.E5.2.3.3.1.** through **V1.E5.2.3.3.6.** and **V1.E5.2.3.3.12.** If sufficient detail is available, the preliminary and final site plan submissions can be combined into a final site plan submission.

V1.E5.2.3.2. Final. A final site plan submission must include the information in paragraphs **V1.E5.2.3.3.1.** through **V1.E5.2.3.3.12.**

V1.E5.2.3.3. Site Plan Contents. A site plan should consist of:

V1.E5.2.3.3.1. The DoD Component's approval, in the transmittal document, of the proposal, along with any changes, modifications, or specific precautionary measures considered necessary.

V1.E5.2.3.3.1.1. (Added)(AF) Components of the ESP. ESPs must include all the information needed for the reviewer to determine if the explosives safety requirements of this manual are being met. **(T-1).** Although the exact contents of an ESP may vary depending on the activity sited, ESPs generally include a transmittal letter, Explosives Safety Siting Submittal Form, a site location map, and various attachments. For some ESPs, a transmittal letter containing pertinent information and a map may be all that is necessary. Other ESPs may require documentation such as detailed drawings, engineering analyses, risk assessments, commanders' risk acceptances, etc., in order to verify compliance with explosives safety requirements (see paragraph **V1.E5.2.3.3.2.9.**).

V1.E5.2.3.3.1.2. (Added)(AF) Transmittal Letter.

V1.E5.2.3.3.1.2.1. **(Added)(AF)** The transmittal letter is important for getting an ESP successfully reviewed and approved; and will be signed by the installation commander. **(T-1).** Generally, explain all aspects of the siting and attempt to answer any questions before they are raised. Consider that personnel reviewing the ESP may not be familiar with the base, or operation, including unique terminology, and do not know the mission or specific circumstances. Include the ESP action number in the subject line of the memorandum. ESP action numbers are developed as follows:

V1.E5.2.3.3.1.2.1.1. **(Added)(AF)** The requesting MAJCOM designation followed by the tenant MAJCOM designation, if appropriate (e.g., USAFE-AFAFRICA, or AFMC-ACC).

V1.E5.2.3.3.1.2.1.2. **(Added)(AF)** The installation where the PES is located (e.g., Hill AFB, Ramstein AB, or Logan IAP).

V1.E5.2.3.3.1.2.1.3. **(Added)(AF)** Calendar year designation (e.g., 18, or 19).

V1.E5.2.3.3.1.2.1.4. **(Added)(AF)** An (S) identifier followed by a sequence number (e.g., S26, or S39). Number each request sequentially for each calendar year (e.g., the first ESP for the calendar year would be S1). Canceled requests will not affect the number of subsequent requests (e.g., if USAFE-Ramstein-14-S10 were canceled, the next ESP submitted for Ramstein AB in 2014 would be S11.

V1.E5.2.3.3.1.2.1.5. **(Added)(AF)** If the ESP involves only compensatory measures that avoid all QD deviations, include the statement, "WITH COMPENSATORY MEASURES" immediately following the ESP action number.

V1.E5.2.3.3.1.2.1.6. **(Added)(AF)** If the transmittal letter is for more than one ESP, include the ESP action number for each ESP (e.g., PACAF-Hickam-14-S5, S6, and S10, or AMC-Scott-15-S20 through S34).

V1.E5.2.3.3.1.2.2. **(Added)(AF)** Begin the letter by explaining the purpose of the submission (e.g., Request routine processing for subject site plan for final approval.). If new construction is involved, include this statement in the subject line: "Involving new Construction." This ensures reviewing and approval authorities correctly prioritize the submission request for review.

V1.E5.2.3.3.1.2.3. **(Added)(AF)** State the reason(s) for the request (e.g., "to construct a new maintenance and inspection facility," or "to increase the NEWQD at an existing aboveground magazine"). Clearly identify whether new construction is requested; expeditious and new construction ESPs receive priority processing.

V1.E5.2.3.3.1.2.4. **(Added)(AF)** If the ESP replaces an existing ESP include a cancellation statement (e.g., "The modification to this facility cancels ESP AFMC-Hill-02-S7.").

V1.E5.2.3.3.1.2.5. **(Added)(AF)** State whether or not all explosives safety criteria are met. If there are deviations, provide a unique deviation identification tracking number for each waiver or exemption. This number is developed using the format as described in paragraphs **V1.E5.2.3.3.1.2.1.1.** through **V1.E5.2.3.3.1.2.1.5.**, with the following modifications:

V1.E5.2.3.3.1.2.5.1. **(Added)(AF)** Use the identifier (W) for waivers or (E) for exemptions instead of (S) for the identification tracking number in the Notes section on the Explosives Safety Siting Submittal Form for the applicable exposure.

V1.E5.2.3.3.1.2.5.2. **(Added)(AF)** This unique identification number is based on the approval level, installation, and calendar year. Each installation uses its own numbering sequence (e.g., ACC-Hill-15-W01) as the first MAJCOM-level waiver identification number at Hill AFB for calendar year 2015. Use 388FW-Hill-15-W01 for the first wing-level waiver identification number.

V1.E5.2.3.3.1.2.5.3. **(Added)(AF)** Subsequent ESP submissions with QD deviations within the same calendar year use the next available identification number at that installation for the type of deviation required (e.g., the next MAJCOM-level waiver identification number at Hill AFB would be ACC-Hill-15-W02 while the first MAJCOM-level exemption would use ACC-Hill-15-E01). This method allows accurate tracking of deviations based on the approval level, installation and calendar year.

V1.E5.2.3.3.1.2.5.4. **(Added)(AF)** Include superseded waiver or exemption identification numbers, if applicable.

V1.E5.2.3.3.1.2.6. **(Added)(AF)** If the ESP has any unique characteristics, explain what criteria are being applied and the basis for the application.

V1.E5.2.3.3.1.2.7. **(Added)(AF)** Describe compensatory measures if they are necessary to meet QD standards. Units will develop a means to assure continued implementation of compensatory measures. **(T-2).**

V1.E5.2.3.3.1.2.8. **(Added)(AF)** For ESPs involving new construction, include the project identification and Programming, Design, and Construction number.

V1.E5.2.3.3.1.2.9. **(Added)(AF)** Discuss any future plans that may impact this siting. State that the Base Facilities Board has reconciled this particular ESP with the base comprehensive plan. Provide meeting minutes, dated reference or written record of reconciliation.

V1.E5.2.3.3.1.2.10. **(Added)(AF)** Explain the format being used to record QD evaluation (e.g., “The attached form and map shows all exposures and required separations.”).

V1.E5.2.3.3.1.2.11. **(Added)(AF)** Provide a narrative description of the relevant explosives safety aspects of the facility design.

V1.E5.2.3.3.1.2.11.1. **(Added)(AF)** If the facility includes an LPS, state that it meets all design requirements of this manual, National Fire Protection Association (NFPA) 780, AFI 32-1065, and attach LPS drawings. For PESs, if the facility does not include an LPS, state what deviation is being applied per section **V2.E4.4.**, address any requirements relevant to that deviation, and attach the commander's risk acceptance if required.

V1.E5.2.3.3.1.2.11.2. **(Added)(AF)** If protective construction features not previously approved by the DDESB are to be used (e.g., personnel shields, blast-resistant construction), include a structural engineering analysis and construction drawings (see paragraph **V1.E5.2.3.3.2.8.3.**). Provide a summary of the results of the structural engineering analysis.

V1.E5.2.3.3.1.2.11.3. **(Added)(AF)** Describe how compliance with the glass panel design requirements of **Volume 1 – Enclosure 9** are met. Attach a glass breakage risk assessment if required.

V1.E5.2.3.3.1.2.11.4. **(Added)(AF)** Describe results of WSM HERO survey.

V1.E5.2.3.3.1.2.11.5. **(Added)(AF)** Describe unique safety aspects of the facility design such as the presence of hazardous locations, use of conductive floors, etc.

V1.E5.2.3.3.1.2.11.6. **(Added)(AF)** If the facility design is a standard design that the DDESB has previously reviewed and declared acceptable, construction drawings do not need to be submitted. Identify the drawing number and the source of previous DDESB approval (e.g., DDESB TP 15). HASs may be referred to by type (e.g., 3rd GEN, Korean TAB VEE). Contact MAJCOM/SEW if definitive drawing numbers are unknown. Describe any planned deviations from the standard design for purposes of local site adaptation (e.g., addition of gunite cover to an earth-covered magazine (ECM) to protect from erosion); do not make changes to standard designs that affect the explosives safety characteristics of the facility.

V1.E5.2.3.3.1.2.12. **(Added)(AF)** For tiered ESPs, identify the management plan implementation document.

V1.E5.2.3.3.1.2.13. **(Added)(AF)** Describe the EZ used. State if the EZ does not exceed the IB distance, or if there are no PESs in the EZ.

V1.E5.2.3.3.1.2.14. **(Added)(AF)** State if a commander's authorized risk acceptance option is being applied and the derivative paragraph, table, or note option allowing the commanders risk acceptance.

V1.E5.2.3.3.1.2.15. **(Added)(AF)** Identify and explain the purpose of all attachments.

V1.E5.2.3.3.1.2.16. **(Added)(AF)** Address compliance with ESP coordination requirements (e.g., notification or coordination with host-nation officials, discussions with tenant units, etc.).

V1.E5.2.3.3.1.2.17. **(Added)(AF)** Staff agency point of contact in the event clarification is necessary.

V1.E5.2.3.3.1.2.18. **(Added)(AF)** If expeditious processing is being requested, include the following:

V1.E5.2.3.3.1.2.18.1. **(Added)(AF)** On the subject line of the memorandum state, for example "Request for EXPEDITIOUS processing of Explosives Site Plan (ESP) for AFSPC-Vandenberg-14-S2." Explain the reasons why expeditious processing is necessary (e.g., compelling mission or construction impact). These reasons must show sufficient mission impact to warrant the expeditious processing, or the ESP will be reviewed according to the routine processing procedures.

V1.E5.2.3.3.1.2.18.2. **(Added)(AF)** Date when approval is needed and why it is needed by that date (e.g., "Approval is required by 15 June 2014 to support planned contract award for new construction.").

V1.E5.2.3.3.1.3. (Added)(AF) ESP Submittal Form. Use the ESP submittal form to provide PES and ES information and to validate required QD separation. Prepare a separate Submittal Form for each PES (or ES in the case of an ES ESP) to be sited. See paragraph **V1.E5.2.3.3.2.10.** for alternative Submittal Form formats. Instructions for completing the Explosives Safety Siting Submittal Form are provided in Table **V1.E5.T2.** Include the following information on the ESP Submittal Form:

V1.E5.2.3.3.1.3.1. **(Added)(AF)** ESP action number (see paragraph **V1.E5.2.3.3.1.2.1.**). Action number will be placed in the "Location" block.

V1.E5.2.3.3.1.3.2. **(Added)(AF)** For explosives locations, identify all ESs and PESs within the IB distance, and all PESs within the EZ if it is larger than the IB distance. For ESPs with an IB distance less than 100 feet, ensure exposures requiring a minimum separation distance (e.g., 100 feet for parking lots exclusively supporting the PES) are identified. For non-explosive locations, identify all PESs within the EZ. For some non-explosive locations, it may not be necessary to identify all PESs (e.g., unmanned miscellaneous structures requiring 50-foot separation from any PES can be sited by merely identifying the nearest PES).

V1.E5.2.3.3.1.3.3. **(Added)(AF)** The EZ is based on the QD type of the ES (e.g., Operating Location, combat aircraft parking area (CAPA)), and the largest NEWQD PES on the installation. To determine the size of the EZ, when a K Factor is required use the largest HD 1.1 NEWQD authorized in a single PES on the installation or within the established clear zone (maximum of 500,000 pounds) (see Table **V1.E5.T1.**). For other HDs, use the minimum prescribed distances found in the appropriate QD tables. See Figure **V1.E5.F1.** for examples of EZs.

V1.E5.2.3.3.1.3.4. **(Added)(AF)** For all PESs and ESs, provide the following:

V1.E5.2.3.3.1.3.4.1. **(Added)(AF)** Assigned civil engineering building number or other identifier (e.g., Bldg 123, or F123).

V1.E5.2.3.3.1.3.4.2. **(Added)(AF)** Applicable Tables **V3.E3.T17.**, **V3.E3.T18.**, and **V3.E3.T19.** description (e.g., ECM, or Related Facility). Identify the presence of barricades if they affect the QD required.

V1.E5.2.3.3.1.3.4.3. **(Added)(AF)** Primary operation normally expected at the facility (e.g., shipping and receiving, maintenance and inspection, or bomb build-up). If facility type determines QD criteria applied, include definition of building such as Korean TAB VEE, 3rd Gen HAS, 26x60 igloo, 26x40 igloo, etc. Show definitive drawing numbers when available.

V1.E5.2.3.3.1.3.4.4. **(Added)(AF)** The organization whose assets or people will be in the facility. Include the MAJCOM, Wing, Squadron, and show unit designations by number and alpha designation (e.g., USAFE-52FW). Include the branch of service if other than the Air Force.

V1.E5.2.3.3.1.3.5. **(Added)(AF)** For all PES, provide the NEWQD for all HDs (HD 1.2.3, 1.5, and 1.6 may be omitted unless quantities will be present). Include maximum credible event (MCE) for HD 1.2.1. Include MCE and parenthetical fragment distance for HD 1.2.3. If no MCE is specified, use the NEWQD of the single round. If no NEWQD is provided, contact AFSEC/SEW. For HD 1.4, site per mission requirements. If MEQ or Op Limit is desired, use 3,001 or greater. If no explosives in a particular HD will be present, then leave blank. For multiple room facilities, show values for each room where explosives will be present. Where IM is not provided between rooms or cubicles, show overall values for the facility. If explosives are unpackaged see **Volume 1 – Enclosure 6**. The explosive authorization must always show the sited, waived, or exempted weights, whichever is greater.

V1.E5.2.3.3.1.3.6. **(Added)(AF)** It is important to ensure facilities or locations being sited, whether explosive or non-explosive, within the IBD and EZ comply with QD requirements. Accomplish this by conducting a paired relationship evaluation. Evaluate an explosives facility or location as both a PES and an ES. This is a two-way evaluation where the most restrictive distance between the pair is documented. A non-explosive ES is a one-way evaluation from surrounding PESs to the ES.

V1.E5.2.3.3.1.3.7. **(Added)(AF)** Identify the actual separation between each pair.

V1.E5.2.3.3.1.3.8. **(Added)(AF)** Using applicable Tables **V3.E3.T17.**, **V3.E3.T18.**, or **V3.E3.T19.** and applicable notes, identify the most restrictive (greatest)

separation distance required between each pair for each HD, and the appropriate K-factor, minimum distance or rule used to determine this distance.

V1.E5.2.3.3.1.3.9. **(Added)(AF)** For each instance where the required separation is greater than the actual separation, provide the deviation identification number (see paragraph **V1.E5.2.3.3.1.2.5.**).

V1.E5.2.3.3.1.3.10. **(Added)(AF)** For ESPs with waivers or exemptions, include the following:

V1.E5.2.3.3.1.3.10.1. **(Added)(AF)** Describe the explosive effects the PES will have on the unit's mission, or other supported agencies (see **Volume 1 – Enclosure 8**).

V1.E5.2.3.3.1.3.10.2. **(Added)(AF)** Describe any corrective actions, compensatory measures, and controls to achieve safety during operations if the ESP is approved. State whether corrective action can or cannot be done locally with available funds or other resources. If there is no planned construction or other corrective actions, explain why. Show planned or programmed (funded and unfunded) actions to eliminate deviations. Such action might include recommendations to higher headquarters, assigning priorities, funding revisions to standard facilities, etc. If there are other local projects underway that involve funding, show the following: construction priority assigned, Military Construction Program item number, and fiscal year for construction. Include any operational controls necessary.

V1.E5.2.3.3.1.3.10.3. **(Added)(AF)** Give the reason for the request. Describe impact if requested action is not approved.

V1.E5.2.3.3.2. Drawings at a scale of 1 inch equals not more than 400 feet (ft) or metric equivalent. Smaller scale drawings may periodically be necessary to properly reflect certain distance and structure relationships within the area surrounding a given project. When standard drawings exist for a building or group of buildings that the DDESB has reviewed and declared acceptable, these definitive drawings do not need to be resubmitted. In such cases, the site plan must note the definitive drawings for each building or structure to be constructed.

V1.E5.2.3.3.2. **(Added)(AF)** A sample submittal drawing is provided in Figure **V1.E5.F2.**

V1.E5.2.3.3.2.1. **(Added)(AF)** When there is reasonable doubt about the accuracy of the mapped location, it is the responsibility of all participants in the explosives site planning process to define a locally acceptable method for determining the measurement accuracy required between the PES-ES locations.

V1.E5.2.3.3.2.2. **(Added)(AF)** If the base boundary is not shown on the map, certify the relationship of the explosives clear zone to the base boundary in the transmittal letter.

V1.E5.2.3.3.2.3. **(Added)(AF)** When siting a PES, show all ESs within IBD of the PES. When there is an EZ larger than the IB clear zone of the PES being sited show the EZ (with dashed line) and the PESs in it.

V1.E5.2.3.3.2.4. **(Added)(AF)** When siting an ES, show the EZ (dashed line) and all PESs in the EZ.

V1.E5.2.3.3.2.5. **(Added)(AF)** Use color coding to simplify and speed the review process. Identify the PESs in red and ESs in green. Highlight the clear zone lines in red.

V1.E5.2.3.3.2.6. **(Added)(AF)** Include ESP action number, title and scale.

V1.E5.2.3.3.2.7. **(Added)(AF)** When siting multiple PESs, show the IBD clear zone for each PES. Show a blended clear zone if it provides additional clarity.

V1.E5.2.3.3.2.8. (Added)(AF) Construction Drawings and Structural Engineering Analyses.

V1.E5.2.3.3.2.8.1. **(Added)(AF)** For facilities not being constructed IAW a previously DDESB-approved design (see paragraph **V1.E5.2.3.3.1.2.11.2.**), construction drawings showing applicable safety and protective features are required. These drawings must show, at a minimum, the following information:

V1.E5.2.3.3.2.8.1.1. **(Added)(AF)** Floor layout, roofs, windows, and general materials used. **(T-1).**

V1.E5.2.3.3.2.8.1.2. **(Added)(AF)** SDWs, vent walls, firewalls, operational shields and barricades. **(T-1).**

V1.E5.2.3.3.2.8.1.3. **(Added)(AF)** Exits and fire protection system installations. **(T-1).**

V1.E5.2.3.3.2.8.1.4. **(Added)(AF)** Types of floor finish, electrical systems and equipment, and ventilation systems and equipment. **(T-1).**

V1.E5.2.3.3.2.8.1.5. **(Added)(AF)** Hazardous waste disposal systems. **(T-1).**

V1.E5.2.3.3.2.8.1.6. **(Added)(AF)** LPS and static grounding systems. See paragraph **V1.E5.2.3.3.2.8.2.** for detailed LPS drawing requirements. **(T-1).**

V1.E5.2.3.3.2.8.1.7. **(Added)(AF)** Process equipment. **(T-1).**

V1.E5.2.3.3.2.8.1.8. **(Added)(AF)** Auxiliary support structures. **(T-1).**

V1.E5.2.3.3.2.8.1.9. **(Added)(AF)** Drawings, specifications, rationale and base security manager approval of physical security designs when the design is different than standard construction methods used for explosive facilities. **(T-1).**

V1.E5.2.3.3.2.8.1.10. **(Added)(AF)** Do not submit drawings (e.g., for landscapes or pavements) that are not relevant to QD or safety protective factors. **(T-1).**

V1.E5.2.3.3.2.8.2. **(Added)(AF)** LPS drawings will include:

V1.E5.2.3.3.2.8.2.1. **(Added)(AF)** Elements of the LPS, such as air terminals, masts, overhead wires, grounding electrode system and a description of the surge protection. **(T-1).**

V1.E5.2.3.3.2.8.2.2. **(Added)(AF)** Top, front, side, and additional views as necessary depicting the dimensions (spacing and height) between design elements. Front and side elevations depicting air terminals and the 100-foot radius (200-foot diameter) rolling sphere zone of protection is suggested to facilitate the ESP review process. **(T-1).**

V1.E5.2.3.3.2.8.3. **(Added)(AF)** For protective construction features not previously approved by the DDESB, provide construction drawings and a structural engineering analysis including:

V1.E5.2.3.3.2.8.3.1. **(Added)(AF)** Statement of the design objectives in terms of protection categories to be obtained (see DDESB TP 15).

V1.E5.2.3.3.2.8.3.2. **(Added)(AF)** The explosives quantities involved.

V1.E5.2.3.3.2.8.3.3. **(Added)(AF)** The design loads applied.

V1.E5.2.3.3.2.8.3.4. **(Added)(AF)** Any material properties and structural behavior assumptions made.

V1.E5.2.3.3.2.8.3.5. **(Added)(AF)** References and the sources of methods used.

V1.E5.2.3.3.2.9. (Added)(AF) Automated Explosives Safety Siting. Units will use the automated Explosives Safety Siting Program for ESP development. **(T-1).** In the event the unit does not have access to ESS due to location, then use manual means of ESP development, but submit it electronically to the greatest extent possible.

V1.E5.2.3.3.2.10. (Added)(AF) Alternative Submittal Form Formats. In some instances, modifications to the Explosives Safety Siting Submittal Form or a substitute format may be acceptable. Provide a description of the proposed alternative format, and justification for its use, to the MAJCOM for approval. MAJCOM/SE will coordinate with AFSEC/SEW prior to granting approval. **(T-1).** Any alternative format used must provide the information required in paragraph **V1.E5.2.3.3.1.3. (T-1).**

Figure V1.E5.F1. (Added)(AF) EZ Examples.

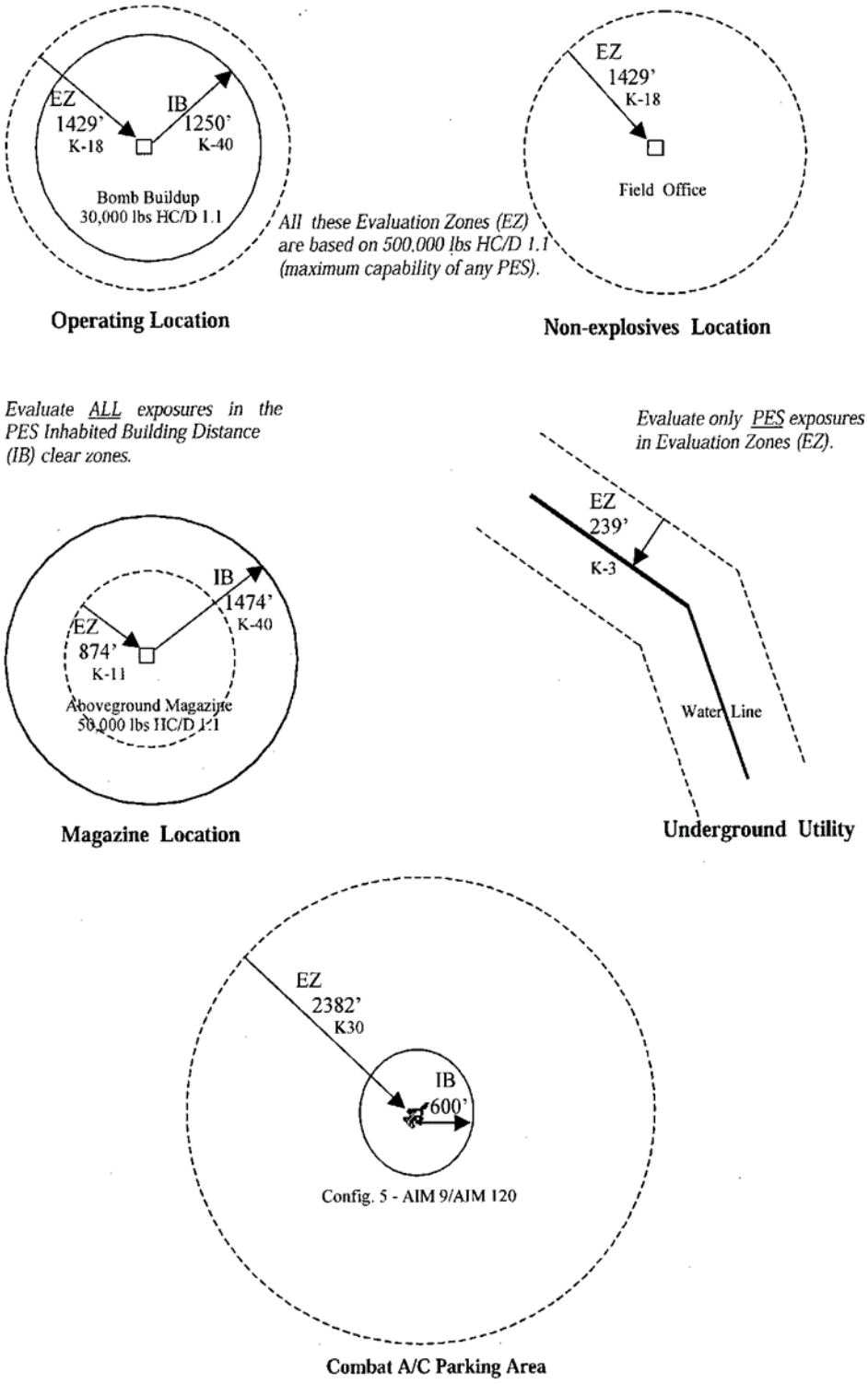

Figure V1.E5.F2. (Added)(AF) Sample Automated Explosives Safety Siting Submittal Drawing.

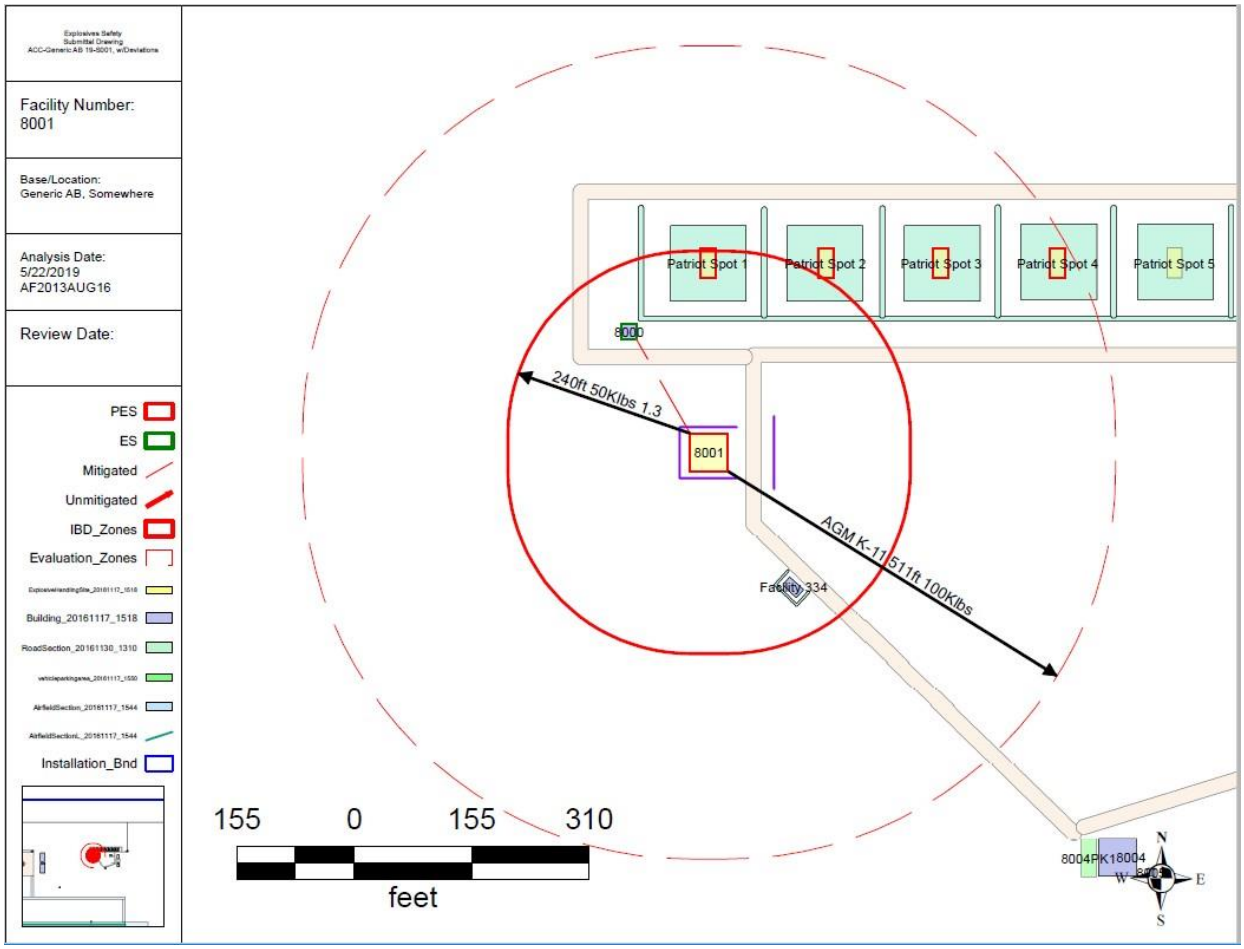

Table V1.E5.T1. (Added)(AF) EZs for ESs.

Exposed Site	Evaluation Zone (feet)	Evaluation Zone (K-Factor)
Earth Covered Magazine	874	K-11
Aboveground Magazine	874	K-11
Barricaded Module	874	K-11
Operating Location	1429	K-18
Remote Operating Location	1429	K-18
Combat Aircraft Parking Area	2382	K-30
Aircraft Explosives Cargo Parking Area	2382	K-30
Flightline Munitions Holding Area	874	K-11
Hardened Aircraft Shelter	1429	K-18
Defensive Missile Battery	874	K-11
Airfield Military Use Only Runway	2382	K-30
Airfield Military Use Only Taxiway	2382	K-30
Airfield Joint, Military/Non Military Use Runway	3969(4)	K-50(4)
Airfield Joint, Military/Non Military Use Taxiway	2382	K-30
Non-Explosives Loaded Aircraft	3969	K-50
Passenger Load/Unload Area	2382	K-30
Facilities For Combat Aircraft Alert Forces	1429	K-18
Aboveground Utilities	2382	K-30
Underground Utilities	239	K-3
Aboveground Bulk POL Facilities	3969(4)	K-50(4)
Public Traffic Route	2382	K-30
Recreation Area/Facility	2382	K-30
Related Facility	1429(3)	K-18(3)
Inhabited Building Distance	3969(4)	K-50(4)

Notes: **(Added)(AF)**

1. **(Added)(AF)** Base EZs shown on 500,000 pounds NEWQD at the applicable K factor for the paired relationship. Use smaller EZs based on the largest amount of HD 1.1 authorized in a single PES on the installation or within the established clear zone. For other HDs, use the prescribed distances found in the appropriate QD tables.
2. **(Added)(AF)** EZs that are smaller than the IB clear zone of the PES being sited have no effect because all the facilities within that IB zone are already listed.
3. **(Added)(AF)** In addition to the PESs in the EZ, list those PESs that have an IB relationship to the ES.
4. **(Added)(AF)** Use EZs for IB targets only to determine if an ESP is required. Only prepare an ESP for ESs requiring IB distance from all PESs if they are located within an explosives clear zone.

Table V1.E5.T2. (Added)(AF) Sample Explosives Safety Site Plan Submittal Form.

EXPLOSIVES SAFETY SITE PLAN

SECTION I - GENERAL INFORMATION

INSTALLATION:	LOCATION:	DATE:	QD Engine: AF2013AUG16
Generic AB, Somewhere	ACC-Generic AB 19-S001, w/Deviations	22 May 2019	ESS: 6.1.3.19.8

SECTION II - DATA ON FACILITY TO BE SITED

FAC # & OWNER	FACILITY DESC	RQD IBD	RQD PTR	1.1 (xx)	1.2.1 MCE	1.2.2	1.2.3 MCE (xx)	1.3	1.4
8001 US Army 555 ADA	AGM Magazine, Abv Gnd, BAR	240 ft	240 ft					50000 lbs	

SECTION III - PES/ES QD PAIRED RELATIONSHIPS WITH FACILITIES BEING SITED

FAC # & OWNER	FACILITY DESC	ACT & RQD DIST	ORIEN-TATION	1.1 (xx)	1.2.1 MCE	1.2.2	1.2.3 MCE (xx)	1.3	1.4
8000 US Army 555 ADA IL	AGU Electrical Pwr Generator	Actual: 142.45 ft Required: 163 ft	As ES Related: A Barricaded					163 ft T12.12 IMD/ILD	
See Exemption Package: ACC-Generic AB 19-E001 for details.									
Patriot Spot 1 US Army 555 ADA IM	MLP Missile Defense Battery	Actual: 204.44 ft Required: 163 ft	As ES Barricaded					163 ft T12.12 IMD/ILD	
		Actual: 204.44 ft Required: 83 ft	As PES (reverse) Barricaded	0 lbs 0 ft T12.1 AGM(B) :AGM(B)				5755 lbs 83 ft T12.12 IMD/ILD	
Patriot Spot 2 US Army 555 ADA IM	MLP Missile Defense Battery	Actual: 236.28 ft Required: 163 ft	As ES					163 ft T12.12 IMD/ILD	
		Actual: 236.28 ft Required: 83 ft	As PES (reverse)	0 lbs 0 ft T12.1 AGM(UB) :AGM(UB)				5755 lbs 83 ft T12.12 IMD/ILD	
Patriot Spot 3 US Army 555 ADA NA	MLP Missile Defense Battery	Actual: 339.19 ft Required: 83 ft	As PES (reverse)	0 lbs 0 ft T12.1 AGM(UB) :AGM(UB)				5755 lbs 83 ft T12.12 IMD/ILD	
Patriot Spot 4 US Army 555 ADA NA	MLP Missile Defense Battery	Actual: 471 ft Required: 83 ft	As PES (reverse)	0 lbs 0 ft T12.1 AGM(UB) :AGM(UB)				5755 lbs 83 ft T12.12 IMD/ILD	

SECTION IV - EXPOSURES NOT REQUIRING QD

These facilities have been classified as non-applicable for the purposes of QD. Such facilities might include roads, railways, boundaries, or parking lots.

Name	PES Side	Distance	Type	Notes
Facility Facility 334 (Object 336)	NA	161.44 ft	NAF	Trash Receptacle/Dumpster. No QD is required.

1 of 1

Table V1.E5.T2. (Added)(AF) Sample Explosives Safety Site Plan Submittal Form, Continued.

Notes **(Added)(AF)**:
1. **(Added)(AF)** The following sections describe the information provided in a submittal form created using the automated Explosives Safety Siting Program.
2. (Added)(AF) Section I – General Information.
3. **(Added)(AF)** Installation: Used to record the installation ID.
4. **(Added)(AF)** Location: Provides the location of the PES or ES being sited and must include the ESP ID number.
5. **(Added)(AF)** Date: Used to record the date the ESP was created.
6. **(Added)(AF)** QD Engine or automated Explosives Safety Siting Program Version: Documents the QD engine or version number, as well as, the automated Explosives Safety Siting Program build or version number used to create the ESP.
7. (Added)(AF) Section II – Data on Facility Being Sited.
8. **(Added)(AF)** Column 1: Provides the assigned civil engineering building number or other identifier as well as the owning command and unit.
9. **(Added)(AF)** Column 2: Documents the assigned type code and facility description (e.g., EOL, Explosives Operating Facility).
10. **(Added)(AF)** Column 3: Identifies the largest required IBD. This value corresponds to the IBD zone on the submittal map. If the facility being sited is a non-explosives ES, the RQD IBD column will be blank.
11. **(Added)(AF)** Column 4: Identifies the largest required PTR. If the facility being sited is a non-explosives ES, the RQD PTR column will be blank.
12. **(Added)(AF)** Columns 5 through 10: Documents the HD NEWQDs, (xx), and MCEs for the facility being sited. If the facility being sited is a non-explosives ES, the HD columns will be blank. For HD 1.2.1. MCE > 450, the ESS dataset must reflect 451.
13. (Added)(AF) Section III – PES or ES QD Paired Relationships with Facility Being Sited.
14. **(Added)(AF)** If the ES is a non-explosives location, it will have a single line entry unless it falls within multiple sectors of a segmented clear zone. In this case, it will have a single line entry for each sector. If the ES is also a PES, and within the established IBD zone, it will have a two line entry; one as an ES and one as a PES (reverse). If the ES is a PES beyond IBD but within the EZ, it will have a single line entry (reverse).
15. **(Added)(AF)** Columns 1 and 2: Provides the same data described for Columns 1 and 2 in Section II above.
16. **(Added)(AF)** Column 3: Used to record the Actual Distance and Required Distance for the paired relationship. The required distance corresponds to the largest required distance found in columns 5 through 10.
17. **(Added)(AF)** Column 4: This column is used to describe the orientation of the ES from the PES being sited as well as the orientation of the ES to the PES (reverse) when the ES is also a PES. The automated Explosives Safety Siting Program-related code is also provided when applicable.
18. **(Added)(AF)** Columns 5 through 10:

Table V1.E5.T2. (Added)(AF) Sample Explosives Safety Site Plan Submittal Form, Continued.

19. **(Added)(AF)** For a non-explosives ES, a single line entry will be used unless the ES falls in multiple sectors of a segmented zone. In this case, a single line entry will be used for each sector. Each column will list the required distance and exposure type (IMD, ILD, PTRD, etc.) If deviations are involved, the information for the HD causing the waiver or exemption will be in red. Ensure "Submittal Notes" reference the deviation number assigned to the waiver or exemption.
20. **(Added)(AF)** For an ES that's also a PES, use a multiple line entry. One for the ES as an ES from the PES being sited and one for the ES as a PES to the PES being sited. As a PES, columns will also document the NEWQD, MCE, and (xx) of the ES when applicable.
21. **(Added)(AF)** If the ES is also a PES beyond IBD but within the EZ, use a single line entry to show reverse siting requirements as a PES.
22. (Added)(AF) Section IV – Exposures Not Requiring QD.
23. **(Added)(AF)** Use this section to identify ESs not requiring QD. Typically, these facilities will have a type code of NAF (non-applicable facility). Include information in the Notes column explaining why QD does not apply.

V1.E5.2.3.3.3. The distances between the facility to be constructed or modified and all ESs within QD arcs impacted by the project, to include on- and off-installation power transmission and utility lines, the installation's boundary, public railways, and public highways.

V1.E5.2.3.3.4. A description of use and occupancy of each ES within inhabited building distance (IBD), or the risk-based evaluation distance for risk-based site plans, of the facility to be constructed or modified.

V1.E5.2.3.3.5. The NEW for each AE HD that will be stored or handled in the facility to be constructed or modified or that will impact the project.

V1.E5.2.3.3.6. Anticipated personnel limits for the new or modified facility, to include a breakdown by room or bay, when appropriate.

V1.E5.2.3.3.7. Approved drawings or, when approved drawings are not used, general construction details to include materials used, dividing walls, vent walls, firewalls, roofs, operational shields, barricades, exits, types of floor finish, fire protection system installations, electrical systems and equipment, ventilation systems and equipment, hazardous waste disposal systems, lightning protection systems (LPSs), static grounding systems, process equipment, and auxiliary support structures.

V1.E5.2.3.3.8. A summary of the design procedures for any engineering protections that the DDESB has not already approved. The summary must include: a statement of the design objectives in terms of protection categories to be obtained, such as those defined in Unified Facilities Criteria 3-340-02; the explosives quantities involved, the design loads applied; any material properties and structural behavior assumptions made; references; and the sources of methods used. Only engineers who are experienced in the field of structural dynamics and who

use design procedures accepted by professionals in that field may design explosion resistant facilities.

V1.E5.2.3.3.9. Information on the type and arrangement of explosives operations or chemical processing equipment.

V1.E5.2.3.3.10. A topography map with contours (when terrain features are considered to provide natural barricading) or topography that otherwise influences the facility's layout, as in some chemical operations.

V1.E5.2.3.3.11. When CAs are involved, information on:

V1.E5.2.3.3.11.1. Personnel protective clothing and equipment to be used.

V1.E5.2.3.3.11.2. Treatment of all effluent and waste materials and streams.

V1.E5.2.3.3.11.3. The adequacy of medical support.

V1.E5.2.3.3.11.4. The average wind speed and direction.

V1.E5.2.3.3.11.5. Other support facilities pertinent to chemical safety.

V1.E5.2.3.3.11.6. The warning and detection systems to be used.

V1.E5.2.3.3.11.7. Any hazard analysis performed.

V1.E5.2.3.3.12. An indication of any deviations from pertinent safety standards caused by local conditions.

V1.E5.2.3.3.13. **(Added)(AF)** For waivers or exemptions, the responsible commander's signature shows the request is needed for the mission and risks are acceptable for strategic or compelling operational reasons. For compensatory measures, the responsible commander's signature shows the compensatory measures are acceptable and will be enforced and any remaining collateral damage, or loss, to facilities or equipment have been accepted.

V1.E5.2.3.4. Records

V1.E5.2.3.4.1. The installation that submits the site plan must maintain a copy of:

V1.E5.2.3.4.1.1. The complete site plan and the final safety submission.

V1.E5.2.3.4.1.2. The DDESB approval.

V1.E5.2.3.4.2. Installations must develop and maintain current (i.e., with the latest site plan approval) installation maps, and drawings that show QD arcs or risk-based evaluation distances, as applicable.

V1.E5.2.3.4.3. Installations must reconcile site plans with the installation's master planning documents.

V1.E5.3. SITE PLANS NOT REQUIRED. Site plans are not required to be submitted to the DDESB for these specific situations; however, the DoD Components must specify siting and documentation requirements for these situations:

V1.E5.3.1. Storage and associated handling of HD 1.4S (see paragraph **V3.E3.4.3.**).

V1.E5.3.2. Interchange yards limited to those operations described in section **V4.E5.5.**

V1.E5.3.3. Inspection stations where only the operations described in section **V4.E5.9.** are performed.

V1.E5.3.4. Parking of aircraft loaded with specific munitions (see paragraph **V4.E3.5.2.**) while in designated aircraft parking areas that meet airfield criteria, and associated handling of these munitions, provided the quantity of munitions involved in the operation is limited to a single aircraft load.

V1.E5.3.4.1. **(Added)(AF)** Hung ordnance areas, arm or de-arm areas, and hot pit refueling areas not used as parking areas, unless they are located in an explosives clear zone (see paragraphs **V4.E3.1.7.** and **V4.E3.1.8.**). In that case site areas as a non-explosives ES.

V1.E5.3.5. The handling of HD 1.3 and HD 1.4 material ($\leq$ 300 lbs NEW) [$\leq$ 136.1 kg] necessary for ships' security and safety at sea (see paragraph **V4.E4.1.2.2.**).

V1.E5.3.6. Storage of, and operations involving, limited quantities of HD 1.2.2, HD 1.3, or HD 1.4 for reasons of operational necessity, as permitted by paragraph **V3.E3.2.11.**, Footnote a of Table **V3.E3.T14.**, and Footnote g of Table **V3.E3.T15.**

V1.E5.3.6. **(Added)(AF)** For AF licensing of these locations see paragraph **V6.E3.6.1.4.**

V1.E5.3.6.1. **(Added)(AF)** Air Force licensed explosives storage locations, unless they are located in an explosives clear zone. In that case site locations as a non-explosives ES.

V1.E5.3.6.2. **(Added)(AF)** Explosives operations associated with licensed explosives storage locations.

V1.E5.3.7. Certain joint or MN non-enduring locations (i.e., combat operating bases (COBs) and combat outposts) where responsibility for determining explosives safety requirements, given all operational and force protection considerations, has been given to geographical CCDRs, in accordance with paragraph **V6.E3.1.1.**

V1.E5.3.8. Inert storage accessed by personnel related to the explosives mission.

V1.E5.3.9. Locations used for a demilitarization processing operation of expended .50-caliber and smaller cartridge casings that meet the requirements of paragraphs **V4.E5.18.1.** and **V4.E5.18.2.** and are located outside of IBD from all PESs.

V1.E5.3.10. Site and general construction plans or amendments to existing plans need not be submitted to the DDESB for facility modifications, mission changes, changes in operations, NEW increases, or HD additions that do not:

V1.E5.3.10.1. Increase explosives safety or CA risks.

V1.E5.3.10.2. Identify requirements for additional or increased explosives or CA hazard controls.

V1.E5.3.10.3. Increase any QD arcs.

V1.E5.3.11. Roll-on/roll-off (RORO) meeting the requirements of section **V4.E5.11.**

V1.E5.3.12. The movement of security force ammunition issued to security forces for designated missions.

V1.E5.3.13. **(Added)(AF)** Activation of simulators and smoke-producing devices in single or small quantities when used in conjunction with exercises and training (to include readiness inspections). See paragraph **V5.E3.2.10.6.** for guidance.

V1.E5.3.14. **(Added)(AF)** Unmanned, non-explosives miscellaneous structures requiring only fire protection distance separation do not require an ESP, even if new construction is involved.

VOLUME 1 – ENCLOSURE 6: HAZARD CLASSIFICATION, STORAGE AND COMPATIBILITY PRINCIPLES

V1.E6.1. HAZARD CLASSIFICATION. To ease identification of hazard characteristics for storage and transportation, the DoD must apply:

V1.E6.1.1. DoD AE hazard classification procedures found in Army Technical Bulletin 700-2/Naval Sea Systems Command Instruction 8020.8C/Technical Order 11A-1-47 as the basis for assigning hazard classifications to all AE for both storage and transportation applications.

V1.E6.1.2. The applicable Department of Transportation (DOT) hazardous materials regulations, in accordance with parts 171 through 177 of Title 49, Code of Federal Regulations (CFR).

V1.E6.1.3. The United Nations' (UN) international system of classification developed for the transport of dangerous goods, found in UN Publication ST/SG/AC.10/1.

V1.E6.1.4. (Added)(AF) Hazard Classification Authorities. The Air Force hazard classification authorities are assigned to AFSEC/SEW, 96th Test Wing Safety (TW/SES), and Air Force Life Cycle Management Center Munitions Division (AFLCMC/EBHE). TO 11A-1-47 lists Army and Navy hazard classification authorities.

V1.E6.1.5. (Added)(AF) Requirement for DoD Hazard Classification. Except as allowed in section **V1.E6.4.**, DoD hazard classifications are required as follows:

V1.E6.1.5.1. **(Added)(AF)** An interim hazard classification (IHC) must be assigned to explosives under development, test articles, components, and commercial products not having a final hazard classification (FHC) if they are transported or stored on DoD property. **(T-1).** DoD hazard classification authorities document the IHC in letters. These letters must be included in storage and shipment documentation until the classification is finalized. **(T-1).** The agency obtaining the IHC must renew it upon termination (as specified in the letter). **(T-1).** This applies if the item is still in the inventory or until an FHC is determined. IHCs assigned by Army and Navy classification authorities are acceptable to the Air Force.

V1.E6.1.5.2. **(Added)(AF)** An FHC must be assigned for explosives items that have become operationally fielded and items requiring commercial shipping OCONUS. **(T-1).** DoD FHCs are listed in the Joint Hazard Classification System (JHCS). Access to the JHCS can be made through the Defense Ammunition Center at https://mhp.redstone.army.mil/MHPMAIN.ASPX. Final DoD hazard classifications assigned by Army and Navy hazard classification authorities are acceptable to the Air Force.

V1.E6.2. DoD HAZARD CLASSIFICATION SYSTEM

V1.E6.2.1. Hazard Classes and Divisions. The DoD hazard classification system consists of nine hazard classes plus a non-regulated category that applies when explosives and hazardous

materials are present in an item, but not to a degree that meets the criteria for assignment to one of the nine classes.

V1.E6.2.1.1. AE is assigned to the class that represents an item's predominant hazard characteristic. Class 1 applies to AE where the explosive hazard predominates. The six Class 1 divisions and three division 1.2 subdivisions, which are outlined in paragraphs **V1.E6.2.1.1.** through **V1.E6.2.1.6.**, are used to indicate the character and predominance of explosive hazards. The three division 1.2 subdivisions are only applicable for storage applications.

V1.E6.2.1.1. **(Added)(AF)** The six Class 1 divisions and three division 1.2 subdivisions are outlined in paragraphs **V1.E6.2.1.3.1.** through **V1.E6.2.1.3.6.**

V1.E6.2.1.1.1. **(Added)(AF)** DOT Classes 2 through 9. The DoD inventory includes AE items assigned to Class 2 (Gases), Class 3 (Flammable Liquids and Combustible Liquids), Class 4 (Flammable Solids, Spontaneously Combustible, and Dangerous When Wet), Class 5 (Oxidizer and Organic Peroxide), Class 6 (Poison (Toxic) and Poison Inhalation Hazard), Class 7 (Radioactive), Class 8 (Corrosive), and Class 9 (Miscellaneous). Although some of these items contain a small amount of explosives, the predominant hazard is not an explosive reaction. They are assigned to Classes 2 through 9 based on the predominant hazard.

V1.E6.2.1.1.1.1. **(Added)(AF)** The DoD hazard classification system classifies articles that contain riot control substances, without explosives components, and bulk toxic materials as HD 6.1. Any item that contains explosives, but is not assigned to Class 1 due to its predominant hazard, is considered to have a NEW of zero for QD determinations. Items that fall into this category do not contribute to the NEW calculated for the storage site. Even though such items are assigned to another class, they will still have a DoD storage compatibility group (CG) designation, and may be combined in storage with compatible Class 1 items. When Classes 2 through 9 ammunition items are stored alone, they do not require siting or licensing, except as an ES.

V1.E6.2.1.1.2. **(Added)(AF)** Not-Regulated Category. This category applies when explosives and hazardous materials are present in an item, but not to the degree that criteria for assignment to one of the nine classes are met. Items that contain a hazardous material, but that have been designated Not-Regulated, do not require storage or handling as a hazardous material. The explosive weight of Not-Regulated items is not considered for QD purposes.

V1.E6.2.1.2. In addition to the classes, divisions, subdivisions, and non-regulated category, 13 compatibility groups (CGs) are used for segregating AE on the basis of similarity of function, features, and accident effects potential. Furthermore, a parenthetical number is used to indicate the minimum separation distance (MSD) (in hundreds of feet) necessary for protection from debris, fragments, and firebrands when distance alone is relied on for such protection. This number is placed to the left of the hazard classification designators 1.1 through 1.3 (e.g., (18)1.1, (08)1.2.3, or (02)1.3).

V1.E6.2.1.2.1. **(Added)(AF)** Compatibility Groups. In developing the various CGs, the following factors are considered: chemical and physical properties, design characteristics,

inner and outer packaging configurations, hazard class and division, NEWQD, rate of deterioration, sensitivity to initiation, and effects of deflagration, explosion, or detonation. The CGs are described in paragraph **V1.E6.2.2.**

V1.E6.2.1.3. To simply express an item's hazard classification, this manual uses the term "HD" to avoid repeatedly using the more cumbersome terminology "Subdivision X of Division Y of Class Z." The six Class 1 divisions and three hazard subdivisions are:

V1.E6.2.1.3.1. HD 1.1. Mass explosion.

V1.E6.2.1.3.1.1. **(Added)(AF)** Blast is the primary hazard in this division. HD 1.1 items may be expected to mass detonate when a small portion is initiated by any means. These explosions generally cause severe structural damage to adjacent objects. Propagation may occur so rapidly to unprotected explosives stored near the initially exploding stack that quantities must be considered as a single source for QD purposes. The combined shock wave, in this case, is the same as a single detonation of a charge equal to the total quantity of the stacks (see simultaneous detonation in the Glossary). Items in this division also generally present a fragmentation hazard, either from the case of the explosive device or from the packaging or the facility where the explosives are stored.

V1.E6.2.1.3.1.2. **(Added)(AF)** HD 1.1 items include bulk HE, some propellants, mines, bombs, demolition charges, some missile warheads, some rockets, palletized projectiles loaded with bulk trinitrotoluene (TNT) or Comp B, mass-detonating cluster bomb/dispenser unit (CBU), and ammunition components having mass-detonating characteristics.

V1.E6.2.1.3.2. HD 1.2. Non-mass explosion, fragment producing. (See section **V3.E3.2.**)

V1.E6.2.1.3.2.1. HD 1.2.1. Those items with a NEWQD > 1.60 pounds (lbs) [0.73 kilograms (kg)] or that exhibit fragmentation characteristics similar to or greater than (higher density, longer distance) M1 105-millimeter (mm) projectiles, regardless of NEWQD.

V1.E6.2.1.3.2.2. HD 1.2.2. Those items with an NEWQD $\leq$ 1.60 lbs [0.73 kg] or that at most exhibit fragmentation characteristics similar to high-explosive 40-mm ammunition regardless of NEWQD.

V1.E6.2.1.3.2.3. HD 1.2.3. AE that exhibits no reaction more severe than burning in the liquid fuel or external fire, bullet impact, and slow heating tests. Additionally, in the sympathetic reaction tests, all acceptors in packages surrounding the donor package exhibit at most an explosion reaction.

V1.E6.2.1.3.3. HD 1.3. Mass fire, minor blast or fragment.

V1.E6.2.1.3.4. HD 1.4. Moderate fire, no significant blast or fragment.

V1.E6.2.1.3.5. HD 1.5. Explosive substance, very insensitive (with mass explosion hazard).

V1.E6.2.1.3.6. HD 1.6. AE that exhibits no reaction more severe than burning in the liquid fuel or external fire, bullet impact, and slow heating tests. Additionally, all acceptors exhibit at most an explosion reaction in the sympathetic reaction tests.

V1.E6.2.2. Storage and Transportation CGs. The 13 CGs are assigned to AE based on similarity of function, features, and accident effects potential.

V1.E6.2.2.1. Group A. Initiating (primary) explosives. Bulk initiating explosives that have the necessary sensitivity to heat, friction, or percussion to make them suitable for use as initiating elements in an explosive train. Examples include bulk lead azide, lead styphnate, mercury fulminate, tetracene, dry cyclotrimethylenetrinitramine (also known as cyclonite, hexogen, or royal demolition explosive (RDX)), and dry pentaerythritol tetranitrate (PETN).

V1.E6.2.2.2. Group B. Detonators and similar initiating devices not containing two or more effective protective features. Items containing initiating (primary) explosives that are designed to initiate or continue the functioning of an explosive train. Examples include detonators, blasting caps, small arms primers, and fuzes.

V1.E6.2.2.3. Group C. Bulk propellants, propelling charges, and devices containing propellant with, or without, its own means of ignition. Examples include bulk single-, double-, or triple-base and composite propellants, rocket motors (solid propellant), and propelled AE with inert projectiles.

V1.E6.2.2.4. Group D. Bulk black powder, bulk high explosives (HE) (secondary explosives), and AE without a propelling charge but containing HE (secondary explosives) without its own means of initiation (i.e., no initiating device is present or the device has two or more effective protective features). Examples include bulk trinitrotoluene (also known as TNT), Composition B, and black powder; bulk wet RDX or PETN; and bombs, projectiles, cluster bomb units, depth charges, and torpedo warheads.

V1.E6.2.2.5. Group E. AE containing HE (secondary explosives) without its own means of initiation and either containing, or packaged with, a solid propelling charge. Examples include artillery AE, rockets, and guided missiles.

V1.E6.2.2.6. Group F. AE containing HE (secondary explosives) with its own means of initiation (i.e., the initiating device present has less than two effective protective features) and with or without a solid propelling charge. Examples include grenades, sounding devices, and similar items having explosive trains with fewer than two effective protective features.

V1.E6.2.2.7. Group G. Illuminating, incendiary, and smoke- (including hexachlorethane (HC)) or tear-producing AE, excluding those that are water-activated or that contain white phosphorus (WP) or a flammable liquid or gel. Examples include flares, signals, and pyrotechnic substances.

V1.E6.2.2.8. Group H. AE containing WP. AE in this group contains fillers that are spontaneously flammable when exposed to the atmosphere. Examples include WP and plasticized white phosphorus (PWP).

V1.E6.2.2.9. Group J. AE containing flammable liquids or gels other than those that are spontaneously flammable when exposed to water or the atmosphere. Examples include liquid- or gel-filled incendiary AE, fuel-air explosive devices, and flammable liquid-fueled missiles and torpedoes.

V1.E6.2.2.10. Group K. AE containing toxic CAs. AE in this group contain chemicals specifically designed for incapacitating effects more severe than lachrymation (producing tears). Examples include artillery or mortar AE (fuzed or unfuzed), grenades, rockets and bombs filled with a lethal or incapacitating CA. (See Footnote d of Table **V1.E6.T1.**)

V1.E6.2.2.11. Group L. AE not included in other CGs and having characteristics that present a special risk that does not permit storage with other types of AE, other kinds of explosives, or dissimilar AE of this group. Examples include water-activated devices, pyrophorics and phosphides and devices containing these substances, prepackaged hypergolic liquid-fueled rocket engines, triethyl aluminum (TEA), thickened TEA (TPA), and damaged or suspect AE of any group. Different types of AE in CG L presenting similar hazards may be stored together.

V1.E6.2.2.12. Group N. AE containing only extremely insensitive detonating substances (EIDS). An example is HD 1.6 AE.

V1.E6.2.2.13. Group S. AE that presents no significant hazard and is packaged or designed so that any hazardous effects from accidental functioning are limited to the extent that they do not significantly hinder firefighting. Examples include explosive switches or valves and small arms ammunition.

V1.E6.2.3. Sensitivity Groups (SGs). For the purpose of storage within a high performance magazine (HPM) (see paragraph **V1.E6.3.7.**) or where ARMCO, Inc. or equivalent earth-filled steel bin revetments (see paragraph **V2.E5.4.5.**) or substantial dividing walls (SDWs) are used to reduce the maximum credible event (MCE), each HD 1.1 and HD 1.2 AE item is designated into one of five SGs based on the item's physical attributes. Directed energy weapons are further identified by assigning the letter "D" following the SG designation (e.g., SG 2D). The SG assigned to an HD 1.1 and HD 1.2 AE item is found in the Joint Hazard Classification System (JHCS).

V1.E6.2.3.1. The five SGs, in relative order from least sensitive to most sensitive, are:

V1.E6.2.3.1.1. SG 2: Non-robust military munitions (see the definition of "non-robust munitions" in the Glossary).

V1.E6.2.3.1.2. SG 1: Robust military munitions (see the definition of "robust munitions" in the Glossary).

V1.E6.2.3.1.3. SG 3: Fragmenting military munitions (see the definition of "fragmenting military munitions" in the Glossary).

V1.E6.2.3.1.4. SG 4: Cluster bomb/dispenser unit (CBU) military munitions (see the definition of "CBU military munitions" in the Glossary).

V1.E6.2.3.1.5. SG 5: Sympathetic detonation (SD) sensitive military munitions (see the definition of "SG" in the Glossary).

V1.E6.2.3.2. Item-specific testing or analyses can be used to change an item's SG.

V1.E6.3. STORAGE AND COMPATIBILITY PRINCIPLES

V1.E6.3.1. Separate storage of AE by HD and type provides the highest degree of safety. Because separate storage is generally not feasible, mixed storage—subject to compliance with these standards—is normally implemented when such storage facilitates safe operation and promotes overall storage efficiency.

V1.E6.3.2. The CG assigned to AE determines what can be stored with the AE so as to avoid significantly increasing an accident's probability or, for a given quantity, the magnitude of an accident's effects. Only compatible AE will be stored together.

V1.E6.3.3. AE may not be stored with dissimilar substances or articles (e.g., flammable or combustible materials, acids, or corrosives) that may present additional hazards to the AE unless they are determined to be compatible. Nonregulated AE and AE assigned to Classes 2 through 9 may have a CG assigned for storage purposes. When so assigned, the AE may be stored in an explosives magazine in accordance with the CG. The explosive weight of nonregulated AE and AE assigned to Classes 2 through 9 is not considered for QD purposes.

V1.E6.3.4. The DoD hazard classification system classifies articles that contain riot control substances, without explosives components, and bulk toxic CAs as HD 6.1.

V1.E6.3.5. AE in damaged packaging, in a suspect condition, or with characteristics that increase risk in storage are not compatible with other AE and will be stored separately (as CG L).

V1.E6.3.6. If different types of CG N munitions are mixed together and have not been tested to ensure non-propagation, the mixed munition types are individually considered to be HD 1.2.1 D or HD 1.2.2 D, based on their NEWQD or overriding fragmentation characteristics.

V1.E6.3.7. Because of its construction (see section **V2.E5.7.**), each HPM storage cell is treated as a separate magazine for the purposes of meeting compatibility and mixing requirements. Within an HPM cell, all current compatibility and mixing regulations apply. The

maximum allowable NEWQD is 30,000 lbs [13,608 kg] in an HPM cell and 60,000 lbs [27,215 kg] in the loading dock with these restraints:

V1.E6.3.7.1. When SG 1, 2, or 3 AE is present in an HPM cell, the allowable NEWQD in all cells (adjacent, across, and diagonal) and in the loading dock remains the maximum.

V1.E6.3.7.2. When SG 4 AE is present in an HPM cell, the allowable NEWQD in each adjacent cell and in the cell directly across from it is reduced to 15,000 lbs [6,804 kg]. The allowable NEWQD in diagonal cells and in the loading dock remains the maximum.

V1.E6.3.7.3. When SG 5 AE is present in an HPM, the NEWQD of all cells and the loading dock must be summed for QD purposes.

V1.E6.3.7.4. When directed energy weapons are present in an HPM, they must be oriented in such a manner that if initiation were to occur, the consequences would be directed away from any other cell. Otherwise, the NEWQD of all cells and the loading dock must be summed for QD purposes.

V1.E6.3.7.5. When HDs and SGs are mixed within an HPM cell, the most sensitive SG associated with the AE in that cell controls the allowable NEWQD in each adjacent cell. For example, when HD 1.3, HD 1.4, and HD 1.6 items are stored with HD 1.1 or HD 1.2 items, the most sensitive SG of the HD 1.1 and HD 1.2 items controls the storage requirements.

V1.E6.3.8. **(Added)(AF)** AE may not be stored with unrelated non-AE items (e.g., powered lift trucks, dunnage, empty boxes, unused pallets, excess packing material). **(T-1).**

V1.E6.3.9. **(Added)(AF)** AE may be stored with related noncombustible equipment as necessary to support approved contingency or war plans requiring ready use of such equipment.

V1.E6.3.10. **(Added)(AF)** Treat AE received without an assigned hazard classification as HD 1.1L and place in segregated storage. Contact AFSEC/SEW for assistance.

V1.E6.3.11. **(Added)(AF)** Segregate serviceable AE from unserviceable AE, including lots suspended from issue and use. Put them in a separate facility or segregate them physically within the same facility. If they remain in the same facility, clearly separate the unserviceable items using ropes, tape, painted lines, or other highly visible means.

V1.E6.3.12. (Added)(AF) Found-on-Installation AE. The following provisions apply to found-on-installation AE:

V1.E6.3.12.1. **(Added)(AF)** Treat unidentified found-on-installation AE of an unknown HD as HD 1.1L. If local munitions or EOD technicians can identify a found-on-installation AE item sufficiently to determine that it is the same as a stock listed, hazard classified item, then it may be stored IAW that hazard classification.

V1.E6.3.12.2. **(Added)(AF)** Found-on-installation AE will not be placed in a licensed facility, regardless of hazard classification. **(T-1).** Ball cartridges, .50 caliber and smaller, and all gauge of shotgun shells, may be treated as HD 1.4C; these same items may be treated as HD 1.4S if this hazard classification can be definitely established.

V1.E6.3.12.3. **(Added)(AF)** Recognize that unidentified AE may contain viable chemical or biological warfare agents, including recovered munitions from historic burial or off-shore disposal sites. If AE is suspected to contain chemical or biological warfare agents, activate local incident management system and wait for confirmation from the appropriate agency (Fire Department, EOD, Emergency Management, and Bioenvironmental Engineering). Contact the MAJCOM Treaty Compliance Officer if the item is identified as a chemical or biological munitions item.

V1.E6.3.13. (Added)(AF) Dangerously Unserviceable AE. Treat dangerously unserviceable AE as CG L and store in an isolated location separated from other AE storage facilities by IMD. Dangerously unserviceable items are those having a substantially greater probability of inadvertent or unintentional activation than a normal item (e.g., unexploded ordnance (UXO), discarded military munitions (DMM), and components thereof, even when rendered safe; or other unserviceable explosives or components that have undergone abnormal or unknown environments (e.g., aircraft crash, natural disaster, or other unknown conditions).

V1.E6.4. MIXED CG STORAGE. AE of different CGs may be mixed in storage only as indicated in Table **V1.E6.T1.** Exceptions exist when applying **Volume 6 – Enclosure 3** at basic load ammunition holding areas (BLAHAs) and ammunition holding areas (AHAs) described in section **V4.E5.24.**, and at locations a DoD Component designates to store AE packaged and configured for rapid response (e.g., rapid deployment force) for which the DDESB has approved the site plan. Such designated locations are authorized to mix CGs, without complying with the compatibility and mixing requirements, as operationally required to achieve the optimum load needed by the intended receiving troops. The MCE allowable at any of these storage sites must be limited to 8,818-lbs NEWQD [4,000-kg net explosive quantity (NEQ)]. When computing QD requirements for such sites, Volumes 3 and 4 of this manual apply.

V1.E6.4. **(Added)(AF)** Separate storage of AE by HD and type provides the highest degree of safety. Because such storage is generally not feasible, mixed storage—subject to compliance with this manual—is normally implemented when such storage facilitates safe operation and promotes overall storage efficiency. The CG assigned to AE indicates what can be stored with the AE without increasing significantly either an accident's probability or, for a given quantity, the magnitude of an accident's effects. AE of different CG may only be mixed in storage as follows:

V1.E6.4.1. **(Added)(AF)** Exclude the following AE for NEWQD determination at such storage sites:

V1.E6.4.1.1. **(Added)(AF)** Propelling charges in HD 1.2 fixed, semi-fixed, mortar, and rocket AE.

V1.E6.4.1.2. **(Added)(AF)** The NEWQD of HD 1.3 items, except at sites that contain only HD 1.3 items. At such sites, HD 1.3 QD applies.

V1.E6.4.2. **(Added)(AF)** In the application of this paragraph, to separate loading AE, the explosive weight of propelling charges is generally excluded when matched pairs of projectiles and propelling charges are at the site. However, if the quantity of propelling charges at the site exceeds the maximum usable for the quantity of projectiles at the site, sum the explosive weights of all propelling charges and projectiles at the site for NEWQD determination.

Table V1.E6.T1. Storage Compatibility Mixing Chart[a, b, c, d, e, f, g, h, i, j]

CGs	A	B	C	D	E	F	G	H	J	K	L	N	S
A	X	Z											
B	Z	X	Z	Z	Z	Z	Z					X	X
C		Z	X	X	X	Z	Z					X	X
D		Z	X	X	X	Z	Z					X	X
E		Z	X	X	X	Z	Z					X	X
F		Z	Z	Z	Z	X	Z					Z	X
G		Z	Z	Z	Z	Z	X					Z	X
H								X					X
J									X				X
K										Z			
L													
N		X	X	X	X	Z	Z					X	X
S		X	X	X	X	X	X	X	X			X	X

a	An "X" at an intersection indicates that the groups may be combined in storage. Otherwise, mixing is either prohibited or restricted in accordance with Footnote b.
b	A "Z" at an intersection indicates that, when warranted by operational considerations or magazine non-availability and when safety is not sacrificed, the DoD Components may approve mixed storage of limited quantities of some items from different groups. Such approval documentation must be kept on site. Component approval of mixed storage in compliance with Z intersections does not require a waiver or exemption. Mixed storage of items within groups where no X or Z exists at that pair's intersection beyond the prohibitions and limitations of Footnote g, however, requires an approved waiver or exemption. Examples of acceptable storage combinations include: 1. HD 1.1A initiating explosives with HD 1.1B fuzes not containing two or more effective protective features. 2. HD 1.3C bulk propellants or bagged propelling charges with HD 1.3G pyrotechnic substances. **(Added)(AF)** Approval from at least the MSA Commander is required in writing.
c	Equal numbers of separately packaged components of hazard-classified complete rounds of any single type of AE may be stored together. When so stored, compatibility is that of the complete round.
d	CG K requires separate storage from other groups, and also may require separate storage within the group. The controlling DoD Component will determine which items under CG K may be stored together and which must be stored separately. Such documentation must be kept on site.
e	Non-Class 1 AE may be assigned the same CG as Class 1 AE containing similar hazard features, but where the explosive hazard predominates as described in paragraph **V1.E6.2.1.1.** Non-Class 1 AE and Class 1 AE assigned the same CG may be stored together.
f	The DoD Components may authorize AE-designated "Practice" or "Training" by nomenclature, regardless of the CG assigned, to be stored with the tactical AE it simulates. Such documentation must be kept on site.
g	The DoD Components may authorize the mixing of CGs, except items in CG A, K, and L, in limited quantities generally of 1,000 lbs [454 kg] total NEWQD or less. Such documentation must be kept on site.
h	For purposes of mixing, all AE must be packaged in its standard storage and shipping container. AE containers will not be opened for issuing items from storage locations. Outer containers may be opened in storage locations for inventorying and for magazines storing only HD 1.4 items, unpacking, inspecting, and repackaging the HD 1.4 ammunition.
i	When using the Z mixing authorized by Footnote b for articles of either CG B or CG F, each will be segregated in storage from articles of other CGs by means that prevent propagation of CG B or CG F articles to articles of other CGs.
j	If dissimilar HD 1.6N AE are mixed together and have not been tested to ensure non-propagation, the mixed AE are individually considered to be HD 1.2.1D or HD 1.2.2D based on their NEWQD or overriding fragmentation characteristics for purposes of transportation and storage. When mixing CG N AE with CG B through CG G or with CG S, see paragraphs **V1.E7.2.3.1.1.**, **V1.E7.2.3.4.**, **V1.E7.2.3.10.**, and **V1.E7.2.3.11.** to determine the HD for the mixture.

V1.E6.5. (ADDED)(AF) STORAGE AND TRANSPORTATION WITHOUT DOD HAZARD CLASSIFICATION. Occasionally, it may be necessary to store or transport explosive substances or articles that do not have a DoD-assigned FHC or IHC. Since such items are not listed in the JHCS, the unit having custody of these items must exercise care in maintaining appropriate approval and hazard classification documentation at the storage installation. **(T-0).** Such documentation may include Department of Energy (DOE) IHC, DOT EX-numbers, or locally-assigned storage hazard classifications established IAW procedures approved by AFSEC/SEW. Paragraphs **V1.E6.6.**, **V1.E6.7.**, **V1.E6.8.**, **V1.E6.9.**, and **V1.E6.10.** describe the circumstances and the respective applicable conditions for storing or transporting AE without DoD hazard classification.

V1.E6.6. (ADDED)(AF) EXPLOSIVES WITH DOE HAZARD CLASSIFICATIONS.

V1.E6.6.1. **(Added)(AF)** An item covered by a DOE IHC may be stored and offered for military or commercial transportation using that classification, subject to the requirements of paragraph **V1.E6.6.3.** A copy of the applicable DOE IHC must be maintained at the installation where the items are stored, and must be carried with shipping papers on board each conveyance used to transport the items under that IHC. **(T-0).**

V1.E6.6.2. **(Added)(AF)** An item covered by a DOE FHC may be stored and offered for military or commercial transportation using that classification, subject to the requirements of paragraph **V1.E6.6.3.** For storage using DOE FHCs, installation records must reflect the DOT EX-number, Class, HD, CG, and NEW for each item stored. **(T-0).**

V1.E6.6.3. **(Added)(AF)** Restrictions on the use of DOE hazard classifications:

V1.E6.6.3.1. **(Added)(AF)** Treat DOE assigned HD 1.2 as HD 1.2.1 and DOE assigned HD 1.5 as HD 1.1 unless an Air Force hazard classification authority determines a different hazard classification applies (see paragraph **V1.E6.1.4.**).

V1.E6.6.3.2. **(Added)(AF)** Use the CG assigned by DOE.

V1.E6.6.3.3. **(Added)(AF)** The NEWQD equals the NEW and for QD purposes, the NEWQD of articles hazard classified by DOE as HD 1.4S or as Not-Regulated will equal zero. See paragraphs **V3.E3.2.4.** and **V3.E3.2.3.1.** for MCE for HD 1.2.1.

V1.E6.6.3.4. **(Added)(AF)** Only store or transport items in the same or equivalent packaging they were hazard classified.

V1.E6.7. (ADDED)(AF) DOD-OWNED NON-STOCK-LISTED COMMERCIAL EXPLOSIVES. A unit may have a requirement to purchase a non-stock-listed commercial explosive product for evaluation or use. Although such items are not standard military inventory items, they are DoD-owned explosives once purchased. Commercial products are items that are not unique to military use and that are legally available for purchase and use by the general public or private businesses (e.g. commercial small arms ammunition, components and propellants; power tool cartridges; fire extinguisher cartridges; signal devices; pest control

devices; theatrical special effects items; commercial demolition materials; and blasting agents). The following requirements apply to such explosives:

V1.E6.7.1. **(Added)(AF)** Hazard Classification. The unit may request a DoD IHC for a non-stock-listed commercial explosive item. Alternatively, store and offer the item for military or commercial transportation using the classification assigned for the product by DOT, subject to the requirements of paragraph **V1.E6.7.6.** The classification assigned to commercial small arms cartridges by the manufacturer as prescribed in 49 CFR Part 173.56(h) may also be used for storage and transportation without a DoD hazard classification.

V1.E6.7.2. **(Added)(AF)** Requirements for Purchase.

V1.E6.7.2.1. **(Added)(AF)** Commanders must ensure the requirements below are accomplished prior to purchase of a non-stock-listed commercial explosive item for operational use.

V1.E6.7.2.1.1. **(Added)(AF)** Safety certification as specified in AFI 91-205. **(T-1).**

V1.E6.7.2.1.2. **(Added)(AF)** Purchase approval from Air Force Life Cycle Management Center (AFLCMC)/EBHE. Submit requests for approval according to AFMAN 21-201. Requirements for non-stock-listed commercial explosives for research and development (R&D) activities will comply with applicable MAJCOM supplements to this manual. **(T-1).**

V1.E6.7.2.2. **(Added)(AF)** AFSEC/SEW approves emergency requirements to purchase non-stock-listed commercial explosives.

V1.E6.7.3. **(Added)(AF)** Adoption into the DoD Inventory. Commercial explosive items adopted as standard DoD inventory items, as evidenced by centralized item management by an AFLCMC or by another military service and assignment of a National Stock Number (NSN), must be covered by a DoD IHC or FHC **(T-0).**

V1.E6.7.4. **(Added)(AF)** Commercial Fireworks. Commercial fireworks will not be purchased by the Air Force under any circumstances. **(T-1).**

V1.E6.7.5. **(Added)(AF)** For commercial products black powder, smokeless powder, and cartridges for small arms received as HD Class 4.1, refer to TB 700-2 for classification and storage.

V1.E6.7.6. **(Added)(AF)** DOT Hazard Classifications. For storage using DOT hazard classifications, installation files must have the DOT EX-number, Class, HD, CG, and NEW for each product stored. **(T-1).**

V1.E6.7.6.1. **(Added)(AF)** Treat DOE or DOT assigned HD 1.2 as HD 1.2.1, and DOE or DOT assigned HD 1.5 as HD 1.1, unless an Air Force hazard classification authority determines a different hazard classification might apply (see paragraph **V1.E6.1.4.**)

V1.E6.7.6.2. **(Added)(AF)** Use the CG assigned by DOT.

V1.E6.7.6.3. **(Added)(AF)** The NEWQD equals the NEW and for QD purposes, the NEWQD of articles hazard classified by DOT as HD 1.4S or as Not-Regulated will equal zero. See paragraph **V3.E3.2.4.** and **V3.E3.2.3.1.** for MCE for HD 1.2.1.

V1.E6.7.6.4. **(Added)(AF)** Only transport and store items in the same or equivalent packaging they were hazard classified in.

V1.E6.8. (ADDED)(AF) MANUFACTURING, R&D ITEMS. In manufacturing, R&D environments, explosives samples, substances, subassemblies, and items may be acquired, produced, and stored without DoD, DOT or DOE hazard classifications, provided they comply with paragraph **V1.E6.7.2.1.** and applicable MAJCOM supplements. **(T-1).**

V1.E6.8.1. **(Added)(AF)** Transport and store these items on-installation IAW locally assigned hazard classifications provided a formal procedure for establishing and documenting the hazard classifications is approved by the MAJCOM/SEW and AFSEC/SEW.

V1.E6.8.2. **(Added)(AF)** Commanders must ensure these items are not offered for transportation from the installation or development location until the necessary DoD, DOT, or DOE hazard classification is assigned. **(T-1).** Contact installation Logistics Readiness Squadron (LRS) when traversing a public roadway between gates or sites on the same installation.

V1.E6.8.3. **(Added)(AF)** Commanders must ensure these items have EOD procedures available prior to use. **(T-1).** The responsible test organization ensures local EOD activities receive a Source Data Package prior to delivery of test assets. Develop the Source Data Package according to DID DI-SAFT-80931 and TO 00-5-3.

V1.E6.9. (ADDED)(AF) FOREIGN EXPLOSIVES. Foreign-owned military AE items brought onto Air Force installations to support multinational military training, exercises, operations or cargo airlift operations may be stored IAW the hazard classifications assigned by the appropriate foreign competent authorities, (AFSEC/SEW will not assign hazard classifications to foreign AE) provided:

V1.E6.9.1. **(Added)(AF)** MAJCOMs document procedures for obtaining AFSEC/SEW approval of these items.

V1.E6.9.2. **(Added)(AF)** The procedures required in paragraph **V1.E6.9.1.** must:

V1.E6.9.2.1. **(Added)(AF)** Require MAJCOM/SEW to obtain and forward to AFSEC/SEW shipping documents for each foreign munitions item requiring hazard classification and storage on an Air Force installation.

V1.E6.9.2.2. **(Added)(AF)** Require MAJCOM/SEW to obtain and forward to AFSEC/SEW a written request from the multinational forces to the Air Force installation where AE items will be stored to include expected duration AE items will be stored and expectation

regarding explosives safety requirements. Require the installation to provide documentation stating they can support the storage of AE and approve the request.

V1.E6.9.2.3. **(Added)(AF)** Require the installation to maintain documentation of AFSEC/SEW review and approval of each item.

V1.E6.9.2.4. **(Added)(AF)** Require the installation to maintain documentation of the foreign hazard classification of each item.

V1.E6.9.3. **(Added)(AF)** Hazard classification documentation approved by the multinational forces' competent authorities for their explosives and munitions is acceptable (in lieu of IHCs) for military air transportation between the foreign departure points and foreign destinations, regardless of whether an intermediate stopover in the U.S. occurs. Such approval documentation is similarly acceptable for in-transit storage of multinational forces' explosives and munitions on U.S. installations worldwide. At a minimum, multinational approval documentation includes: the assigned proper shipping name, United Nations identification number, hazard class or division and CG, the quantity of articles per package, and must be written in English. A copy of the multinational hazard classification approval documentation accompanies military air shipments and are kept on file at installations where multinational forces' explosives and munitions are temporarily stored during transit. Explosives and munitions classed HD 1.2 by multinational forces' competent authorities are managed as HD 1.2.1 when sited on real property controlled by the U.S., or when possessed by U.S. forces.

V1.E6.9.4. **(Added)(AF)** DoD IHCs assigned IAW TO 11A-1-47 accompanying airlift cargo may be used without AFSEC/SEW approval.

V1.E6.10. (ADDED)(AF) NON-DOD-OWNED EXPLOSIVES. Storage of non-DoD-owned explosives on Air Force installations is prohibited except for specific exceptions stated in AFI 32-9003 and Title 10 United States Code 2692 with 1998 Authorization Act changes, storage, treatment, and disposal of nondefense toxic and hazardous materials. Some of these exceptions require approval from the SECAF. Units will forward requests through their MAJCOMs. **(T-1).** Obtain coordination from MAJCOM A4, Judge Advocate (JA), SE and AFSEC/SEW prior to forwarding to Air Force Civil Engineer Center (AFCEC) for action. **(T-1).** Paragraph **V1.E6.10.1.** identifies situations that do not require approval. When non-DoD-owned explosives are stored on an Air Force installation under one of the exceptions, DOE or DOT hazard classifications may be used subject to the requirements in paragraph **V1.E6.10.2.** Commanders must ensure commercial launch vehicles also comply with paragraph **V1.E6.10.3. (T-1).**

V1.E6.10.1. **(Added)(AF)** Situations Not Requiring Approval.

V1.E6.10.1.1. **(Added)(AF)** Ammunition that is privately-owned by military members or their dependents can be stored on an Air Force installation, if the military member is assigned to that installation, or lives in billeting or a dormitory on that installation.

V1.E6.10.1.2. **(Added)(AF)** Non-DoD-owned explosives that may be, or have been, used in connection with an activity of the DoD, or in connection with a service to be performed

on a DoD installation for the benefit of the DoD, can be stored, or disposed of, on an Air Force installation (see section **V4.E5.21.**).

V1.E6.10.1.3. **(Added)(AF)** Non-DoD-owned explosives may be temporarily stored or disposed of on an Air Force installation in order to provide emergency life-saving assistance to civil authorities (see section **V4.E5.21.**).

V1.E6.10.1.4. **(Added)(AF)** Non-DoD-owned explosives that constitute military resources intended to be used during peacetime civil emergencies IAW applicable DoD regulations may be stored on an Air Force installation (see section **V4.E5.21.**).

V1.E6.10.1.5. **(Added)(AF)** Explosives of other Federal agencies meeting the definition of "DoD Explosives Operations and Storage" may be stored on an Air Force installation when no alternative solutions are available provided all other storage requirements can be met.

V1.E6.10.2. **(Added)(AF)** DOE or DOT Hazard Classifications. For storage using a DOE IHC, a copy of the applicable DOE IHC must be maintained at the installation where the items are stored. **(T-1).** For storage using a DOE FHC, installation records must reflect the DOT EX-number, Class, HD, CG, and NEW for each item stored. **(T-1).** For storage using DOT hazard classifications, installation files must have the DOT EX-number, Class, Division, CG, and NEW, for each item stored. **(T-1).** The following additional requirements apply:

V1.E6.10.2.1. **(Added)(AF)** Items classed by DOE or DOT as HD 1.2 must be treated as HD 1.2.1 and HD 1.5 items must be treated as HD 1.1. If a different hazard classification might apply, contact an Air Force hazard classification authority (see paragraph **V1.E6.1.4.**) to determine the correct classification.

V1.E6.10.2.2. **(Added)(AF)** Use the CG assigned by DOE or DOT.

V1.E6.10.2.3. **(Added)(AF)** The NEWQD equals the NEW. For QD purposes, the NEWQD of articles hazard classified by DOE or DOT as HD 1.4S or as Not-Regulated equal zero. See paragraphs **V3.E3.2.4.** and **V3.E3.2.3.1.** for MCE for HD 1.2.1.

V1.E6.10.2.4. **(Added)(AF)** Transport or store items only in the same or equivalent packaging in which they were hazard classified.

V1.E6.10.2.5. **(Added)(AF)** For commercial products black powder, smokeless powder, and cartridges for small arms received as HD Class 4.1, refer to TB 700-2 for classification and storage.

V1.E6.10.3. **(Added)(AF)** Commercial Launch Vehicles.

V1.E6.10.3.1. **(Added)(AF)** The responsible commander contacts the responsible MAJCOM/SEW, who in turn contacts the AFSEC/SEW hazard classification authority for the assignment of an HD 1.3 hazard classification of a rocket motor.

V1.E6.10.3.2. **(Added)(AF)** For commercial launch vehicles fueled by liquid propellants, the explosive equivalents of the fuel combinations (see **Volume 5 – Enclosure 4**) may be used instead of the total weight of fuel in the vehicle for QD purposes. Lesser weights, based on launch vehicle failure analyses, may be used with the approval of AFSEC/SEW and DDESB. Likewise, a commercial solid rocket booster or booster section located at a DoD range launch facility may be stored using an NEWQD less than 100 percent of the propellant weight only with approval of AFSEC/SEW and DDESB.

V1.E6.11. (ADDED)(AF) HAZARD CLASSIFICATION OF UNPACKAGED ITEMS.

DOD Hazard Classification "procedures result in a hazard classification for the AE transportation and storage configuration only". When ammunition or explosive items are not in the form and packaging they are normally stored and shipped (i.e., out of packaging), different hazard classifications may apply due to changes in spacing, orientation, confinement, and other factors. Sometimes testing of unpackaged components may be required in order to demonstrate the validity of classifications used for siting unpackaged ammunition, or conservative assumptions must be made about the potential severity of an accidental explosion. Contact an Air Force hazard classification authority for assistance in determining the hazard classification of an unpackaged item (see paragraph **V1.E6.1.4.**).

V1.E6.11.1. **(Added)(AF)** The hazard classification for some unpackaged items may be given in paragraph **V1.E6.11.2.** Not-Regulated CG S items were classed based on how the unpackaged item reacts. Therefore, the presence or absence of packaging does not change that designation.

V1.E6.11.2. **(Added)(AF)** The following are hazard classifications for certain unpackaged items:

V1.E6.11.2.1. **(Added)(AF)** All HD 1.2. out of the packaging will be treated as HD 1.1 unless otherwise identified.

V1.E6.11.2.2. **(Added)(AF)** Cartridges, 40 mm, High Explosive Dual-Purpose (HEDP), M433 stored in CNU 541/E Containers (modified MK 387 MOD 0 containers with CEMCOM buffer liners) are HD 1.2.2, with an NEWQD of 0.102 pounds per cartridge. This hazard classification is for storage only, not for transportation. CNU 541/E Containers are no longer available; however, this information is provided for existing containers.

V1.E6.11.2.3. **(Added)(AF)** Cartridges, 40 mm, General Purpose, M406 stored in 18-round Ammunition Carrying Vests folded into M2A1 or M548 Ammunition Cans with plastic projectile covers installed are hazard classified as HD 1.2.2E, SG-3. This hazard classification is for storage only and requires each cartridge to be securely nested into a projectile cover made by cutting the 3-round plastic supports from approved bandoleer packs into single-round supports. This hazard classification is for storage only, not for transportation. 40 mm HE/HEDP are HD 1.1. when out of approved packaging configuration.

V1.E6.11.2.4. **(Added)(AF)** 20 mm and 30 mm High Explosive Incendiary (HEI) cartridges, designated HD 1.2.2 when packaged, remain HD 1.2.2 when unpackaged.

V1.E6.11.2.5. **(Added)(AF)** Cartridges for small arms which have inert or tracer projectiles, are below .50 caliber, and are not in their standard packaging are classified as HD 1.4S when kept in closed metal ammunition boxes. They are considered HD 1.4C in other containers.

V1.E6.11.2.6. **(Added)(AF)** CBU-87/89/97/103/104/105, T-1 is considered HD 1.2.2 out of shipping containers.

V1.E6.11.2.7. **(Added)(AF)** 2.75-in Infrared Illuminating Warheads (M278) and the 2.75-in White Phosphorus (WP) (M156) stored in a Launch Adapter Unit (LAU)-131 launcher or transportation modules (out of shipping containers) are classified as HD 1.2.1. This hazard classification does not apply to public transportation.

V1.E6.11.2.8. **(Added)(AF)** HD 1.3 Minuteman missile stages with an HD 1.1 type (CL1/AODS) destruct system installed are considered HD 1.3.

V1.E6.11.2.9. **(Added)(AF)** Guided Bomb Unit (GBU)-39/B Small Diameter Bomb (SDB), GBU-39A/B SDB Focused Lethality Munition (FLM), and GBU-39B/B Laser SDB out of container constraints are listed below. In an all-up-round container (AURC) they are HD 1.2.3.

V1.E6.11.2.9.1. **(Added)(AF)** Out of packaging hazard classification for GBU-39/B SDB I configurations is HD 1.2.3 with the following limitations:

V1.E6.11.2.9.1.1. **(Added)(AF)** HD 1.2.3 for approved configurations listed in approved TOs - as of the date of this manual - provided warhead to warhead distance of > 2.5” between cases and > 8.5” warhead center to center separation is maintained.

V1.E6.11.2.9.1.2. **(Added)(AF)** Mixed loads between GBU-39/B and GBU-39A/B are not allowed when in out of packaging configuration. Mixed Loads are defined as a GBU-39/B and a GBU-39A/B collocated on the same BRU-61/A.

V1.E6.11.2.9.1.3. **(Added)(AF)** Cannot be located next to non-GBU-39/B AE while in an out of packaging configuration.

V1.E6.11.2.9.1.4. **(Added)(AF)** MCE of a unpackaged GBU-39/B remains a single GBU-39/B (i.e., MCE 37 lb) for both containers and NEWQD = 37 lb.

V1.E6.11.2.9.2. **(Added)(AF)** Out of packaging hazard classification for GBU-39A/B SDB FLM configurations is HD 1.2.3 with the following limitations:

V1.E6.11.2.9.2.1. **(Added)(AF)** HD 1.2.3 for approved configurations listed in currently approved TOs - as of the date of this manual- provided warhead to warhead distance of > 2.5” between cases and > 8.5” warhead center to center separation is maintained.

V1.E6.11.2.9.2.2. **(Added)(AF)** Mixed loads between GBU-39A/B and GBU-39/B are not allowed when in unpackaged configuration. Mixed Loads are defined as a GBU-39A/B and a GBU-39/B collocated on the same BRU-61/A.

V1.E6.11.2.9.2.3. **(Added)(AF)** Cannot be located next to non-GBU-39A/B AE while in an unpackaged configuration.

V1.E6.11.2.9.2.4. **(Added)(AF)** MCE of an unpackaged GBU-39A/B SDB FLM is 137.4 lbs and NEWQD = 137.4 lbs for both containers. The primary reason for the increased MCE for unpackaged configurations is the lack of modeling or numerical simulation of an unpacked sympathetic reaction and uncertainties in the tungsten's contribution to the explosive reaction.

V1.E6.11.2.9.3. **(Added)(AF)** GBU-39B/B Laser SDB out of container are HD 1.1. In an AURC they are HD 1.2.3.

V1.E6.12. (ADDED)(AF) LOCALLY WRITTEN INSTRUCTIONS. Conduct all explosives operations IAW written instructions. Item TOs generally fulfill this requirement, but may not address all local conditions. Locally written instructions may be required to address the items in section **V1.E6.13.** Locally written instructions may take the form of crew briefings, safety briefings, local operating instructions, etc. The items in section **V1.E6.13.** may be addressed by one or more of these methods.

V1.E6.12.1. **(Added)(AF)** Locally written instructions will be:

V1.E6.12.1.1. **(Added)(AF)** Approved by the squadron commander or equivalent. **(T-1).** Unit commanders and Additional Duty Weapons Safety Representatives will identify and document all lesson plans, unit checklists, and local operating procedures, which could affect nuclear surety, explosives and weapons safety, or missile safety and provide them to the wing WSM, and all other involved organizations, for coordination prior to implementation and annually thereafter. **(T-1).**

V1.E6.12.1.2. **(Added)(AF)** Available at the work site. **(T-1).**

V1.E6.12.1.3. **(Added)(AF)** Written in the language workers understand. **(T-1).**

V1.E6.12.1.4. **(Added)(AF)** Briefed to all workers prior to beginning an explosives operation. **(T-1).** Ensure workers understand the instructions prior to beginning the operation.

V1.E6.12.2. **(Added)(AF)** Locally written instructions are not required for EOD emergency operations in connection with render safe procedures (RSP) or disposal for level 1 EOD emergency response operations.

V1.E6.12.3. **(Added)(AF)** Locally written instructions are required for level 2 EOD emergency response operations when the time required to develop and gain approval of these procedures will not compromise safety or increase the risks posed to life, property, health, or the

environment due to the unstable condition of the munition(s) under response. See AFMAN 32-3001 for explosives or munitions emergency response.

V1.E6.12.4. **(Added)(AF)** Locally produced checklists and work cards concerning nuclear operations require approval according to TO 00-5-1.

V1.E6.12.5. **(Added)(AF)** Develop and process locally produced operating instructions according to AFI 33-360.

V1.E6.13. (ADDED)(AF) CONTENTS OF LOCALLY WRITTEN INSTRUCTIONS. Include the following information, as applicable, in locally written instructions. The MAJCOM will determine if additional items are required.

V1.E6.13.1. **(Added)(AF)** Personnel limits (see section **V1.E6.16.**).

V1.E6.13.2. **(Added)(AF)** Explosives limits, including HD and CG of the explosives involved (see section **V1.E6.17.**).

V1.E6.13.3. **(Added)(AF)** Exact locations where operations are done.

V1.E6.13.4. **(Added)(AF)** Safety requirements, to include special requirements for personal protective clothing, blast and fragmentation hazards, and equipment. Additionally, static grounding requirements per section **V2.E3.4.1.** of this manual when handling or storing EIDs.

V1.E6.13.5. **(Added)(AF)** Step-by-step procedures for doing the task (refer to specific steps in the TO for applicable portions of the operation).

V1.E6.13.6. **(Added)(AF)** Actions to be taken during an emergency.

V1.E6.14. (ADDED)(AF) PERSONNEL QUALIFICATIONS. Before conducting intentional detonation operations involving live munitions (e.g., EOD operations or range clearance, not including the MMRP); evaluate the need for having emergency medical support onsite in the risk assessment.

V1.E6.14.1. **(Added)(AF)** Train personnel who work with explosives IAW AFI 91-202 and qualified in the tasks to be performed.

V1.E6.14.2. **(Added)(AF)** Personnel must understand all safety standards, requirements, and precautions that apply to the operation. **(T-1).**

V1.E6.14.3. **(Added)(AF)** The supervisor must be knowledgeable of all hazards involved in the operation, convey emergency procedures to workers, casuals, and visitors, and maintain strict housekeeping standards (see section **V1.E6.17.**). The supervisor must also know what steps to take when abnormal conditions arise. **(T-1).**

V1.E6.15. (ADDED)(AF) PERSONNEL LIMITS. Design explosives operations to ensure minimum exposure of personnel to explosives, in compliance with the cardinal principle. Supervisors are responsible for enforcing personnel limits.

V1.E6.15.1. **(Added)(AF)** Buddy System. Good industrial safety practices may dictate use of the buddy system even though only one person may be required to perform the work. Use of the buddy system does not violate the cardinal principle.

V1.E6.15.2. **(Added)(AF)** EOD Procedures. Conduct EOD procedures IAW requirements of AFMAN 32-3001, Joint Service EOD 60-Series manuals, and EOD Tactical Decision Aid.

V1.E6.15.3. **(Added)(AF)** Casuals. Casuals are persons not normally part of an explosives operation but have duties that require their presence, such as quality assurance, safety, or inspection personnel.

V1.E6.15.4. **(Added)(AF)** Visitors. Visitors are non-essential personnel with limited access. Stop operations when visitors are present, or processs a non-QD waiver IAW section **V1.E3.7. (T-3).**

V1.E6.15.5. **(Added)(AF)** Posting Personnel Limits. Clearly post personnel limits for the operations being conducted at each explosives operating location. **(T-1).** Posted limits will distinguish between supervisors, workers, and casuals. **(T-1).** Locally written instructions containing personnel limits will suffice in lieu of posting. **(T-1).**

V1.E6.15.5.1. **(Added)(AF)** Do not post personnel limits at aircraft parking locations, even if used for uploading or downloading explosives.

V1.E6.15.5.2. **(Added)(AF)** Do not post personnel limits at storage locations or licensed explosives storage locations.

V1.E6.16. (ADDED)(AF) EXPLOSIVES LIMITS. Design explosives operations to ensure minimum exposure of personnel to explosives in compliance with the cardinal principle. Only the explosives needed to ensure a safe and efficient work flow will be present in an operating location when operations are being conducted. Comply with CG mixing requirements, if possible, to minimize the likelihood and severity of a mishap. Supervisors are responsible for enforcing explosives limits (see section **V1.E6.4.**).

V1.E6.16.1. **(Added)(AF)** Managing Explosives Limits. Use the NEWQD limits from approved explosive site plans when posting limits. Identify the HD and NEWQD explosive limits at all explosives locations, to include MCE for HD 1.2.1, MCE for HD 1.2.3, and (xx) for HD 1.2.3. Monitor limits using the following methods:

V1.E6.16.1.1. **(Added)(AF)** Managed in an Air Force approved database when used to track NEWQD at the explosives storage or operating locations.

V1.E6.16.1.2. **(Added)(AF)** Identified on a properly displayed explosives facility license, AF Form 2047, at a Licensed location (see paragraph **V6.E3.6.1.4.**).

V1.E6.16.1.3. **(Added)(AF)** Documented in a locally written instruction (see section **V1.E6.12.**).

V1.E6.16.1.4. **(Added)(AF)** Posted clearly at storage locations and operating locations.

V1.E6.16.2. **(Added)(AF)** Posting Operating Limits. For explosives operating locations, clearly post the HD and NEWQD limits (to include MCE for HD 1.2.1, MCE for HD 1.2.3, and (xx) for HD 1.2.3) for the operation being conducted, if less than the authorized explosives limits. These limits may be expressed in terms of the specific explosives items, such as "two Air Intercept Missile (AIM)-9 missiles." Locally written instructions containing HD and NEWQD will suffice in lieu of posting (see section **V1.E6.12.**).

V1.E6.17. (ADDED)(AF) HOUSEKEEPING. The following are minimum precautions:

V1.E6.17.1. **(Added)(AF)** Non-explosives Waste Materials.

V1.E6.17.1.1. **(Added)(AF)** Do not commingle non-explosives waste materials (e.g., oily rags, combustible scrap, wood, paper, and flammable packing materials) with explosives residue. **(T-1).**

V1.E6.17.1.2. **(Added)(AF)** Place non-explosives waste materials in approved, properly marked containers. **(T-1).**

V1.E6.17.1.3. **(Added)(AF)** Place non-explosives waste material containers outside of explosives facilities, except for containers required at work locations during operations. **(T-1).**

V1.E6.17.1.4. **(Added)(AF)** Empty non-explosives waste material containers at working locations as often as needed, but at least once each workday or shift. **(T-1).**

V1.E6.17.1.5. **(Added)(AF)** Contact the base environmental management office for additional guidance for managing and disposing of waste materials. Personnel will follow the base Hazardous Waste Management Plan for proper management of potential hazardous waste and installation environmental will provide necessary site specific supplemental guidance regarding waste characterization and hazardous waste disposal.

V1.E6.17.2. **(Added)(AF)** Explosives Residue.

V1.E6.17.2.1. **(Added)(AF)** Provide grounded, covered, self-closing containers for explosives residue and materials containing explosives residue (e.g., rags, clothing). **(T-1).**

V1.E6.17.2.2. **(Added)(AF)** Cover explosives residue and waste materials containing explosives residue with water or oil, if this does not add to the hazard. **(T-1).** Number 10

mineral oil is useful for covering pyrotechnic, tracer, flare, and similar mixtures. If using water, immediately immerse the items to reduce production of dangerous gases.

V1.E6.17.2.3. **(Added)(AF)** Remove explosives residue and materials containing explosives residue at frequent intervals and before leaving at the end of the duty day or shift. **(T-1).** Place in the disposal area or an isolated temporary collection point.

V1.E6.17.2.4. **(Added)(AF)** When using isolated temporary collection points, set up time and quantity limits to ensure timely movement of collected material to the disposal area. Do not store collected material in the disposal area.

V1.E6.17.2.5. **(Added)(AF)** Ensure explosive residue is managed as Material Potentially Presenting an Explosive Hazard (MPPEH) until certified to be free of explosives material in accordance with DoDI 4140.62 and AFMAN 21-201, section 3.13. Disposal of resulting waste will be disposed IAW environmental standards and locally written instructions or base Hazardous Waste Management Plan approved by the base environmental management office.

V1.E6.17.3. **(Added)(AF)** Cleaning Compounds.

V1.E6.17.3.1. **(Added)(AF)** Do not use cleaning compounds containing wax or oil on conductive floors or surfaces. **(T-1).**

V1.E6.17.3.2. **(Added)(AF)** Do not use cleaning agents that include caustic alkalis in locations containing explosives residue (sensitive explosives compounds may be formed). **(T-1).**

V1.E6.17.3.3. **(Added)(AF)** Remove explosives residue IAW the item TO.

V1.E6.17.3.4. **(Added)(AF)** Use non-abrasive cleaning compounds; such compounds are often combustible but not volatile. **(T-1).** Closed cup flash point of cleaning compounds must meet the Class IIIB Liquid as defined by NFPA 30.

V1.E6.18. (ADDED)(AF) HANDLING OF EXPLOSIVES. This paragraph applies to the handling of explosives and movement of explosives within the immediate vicinity of an explosives operation.

V1.E6.18.1. **(Added)(AF)** Only trained personnel under the supervision of an individual who understands the hazards and risks involved in the operation are to handle explosives.

V1.E6.18.2. **(Added)(AF)** Handle detonators, initiators, squibs, and other such electrically or mechanically initiated devices in protective containers during storage, transportation, and inspection. **(T-1).** Use containers designed to prevent item-to-item contact. Mark containers to identify the contents.

V1.E6.18.3. **(Added)(AF)** Do not use nails to secure covers or make repairs on explosives containers unless there is no hazard to the explosive item or danger of penetrating protective coverings. **(T-1).** Exercise special care when using pneumatic- or cartridge-actuated nail guns.

V1.E6.18.4. **(Added)(AF)** Do not tumble, drag, drop, throw, roll, or "walk" munitions. **(T-1).** Containers designed with skids may be pushed or pulled for positioning.

V1.E6.18.5. **(Added)(AF)** Do not roll unpalletized conventional HE bombs or other explosives unless authorized by the item TO and lugs or other projections have been removed or if they are protected by dunnage rails. **(T-1).**

V1.E6.18.6. **(Added)(AF)** Always consider vehicle and handling equipment type, type of load, and prevailing weather, and surface conditions when determining if safe movement is feasible.

V1.E6.18.7. **(Added)(AF)** Restraining devices designed for use with vehicle and handling equipment will be used IAW applicable TOs.

V1.E6.19. (ADDED)(AF) PORTABLE EQUIPMENT. Ensure portable equipment, which includes lighting systems and electrical cords, meets the requirements listed in AFMAN 91-203.

V1.E6.20. (ADDED)(AF) REQUIREMENTS FOR TEST, DISASSEMBLY, AND MODIFICATION OF EXPLOSIVES ITEMS.

V1.E6.20.1. **(Added)(AF)** Modify, test, or disassemble explosives items only under the following circumstances:

V1.E6.20.1.1. **(Added)(AF)** When authorized by item TO.

V1.E6.20.1.2. **(Added)(AF)** When the MAJCOM and the weapons system's program manager grant approval.

V1.E6.20.1.3. **(Added)(AF)** When EOD personnel perform RSP, technical intelligence gathering, or for special projects authorized per AFMAN 32-3001.

V1.E6.20.2. **(Added)(AF)** Allow only technically qualified personnel to test, disassemble, or modify explosives items.

V1.E6.20.3. **(Added)(AF)** Before starting operations, supervisors must ensure all requirements of section **V1.E6.12.** have been met.

V1.E6.20.4. **(Added)(AF)** Dry run all new procedures with inert or simulated explosives items when possible.

V1.E6.20.5. **(Added)(AF)** Handling new or test munitions (versus operational munitions) requires personnel certification. Use inert items when possible for certification.

V1.E6.20.6. **(Added)(AF)** Do not use suspended munitions (code condition J) unless specifically authorized by the munition's program managers for:

V1.E6.20.6.1. **(Added)(AF)** Dry runs.

V1.E6.20.6.2. **(Added)(AF)** Personnel or test procedure certification, verification, or validation.

V1.E6.20.6.3. **(Added)(AF)** Electrical testing of aircraft or other weapons systems.

V1.E6.20.7. **(Added)(AF)** Comply with section **V1.E6.21.** for electrical testing of explosives items. **(T-1).**

V1.E6.20.8. **(Added)(AF)** Comply with section **V1.E6.22.** for weapons system testing involving live explosives. **(T-1).**

V1.E6.20.9. **(Added)(AF)** Comply with paragraph **V1.E9.3.2.** to determine the need for protective shielding and remotely controlled operations. **(T-1).**

V1.E6.21. (ADDED)(AF) ELECTRICAL TESTING OF EXPLOSIVES ITEMS.

V1.E6.21.1. **(Added)(AF)** Follow instructions in specific weapon or weapons system TOs for testing individual explosives items or weapon systems containing explosives items. Where there is doubt about the safety or adequacy of any test procedure or instrumentation, submit a request for advice or assistance to the program manager responsible for the TO.

V1.E6.21.2. **(Added)(AF)** Ensure electrical test equipment introduced to a hazardous location meets the requirements of **Volume 2 – Enclosure 3**.

V1.E6.21.3. **(Added)(AF)** In developing specific weapon and weapons system TOs, the responsible engineering function must consider the following guidance:

V1.E6.21.3.1. **(Added)(AF)** Electrical or electronic test equipment must use the weakest possible power source. **(T-1).** If feasible, require the use of battery-powered equipment instead of a 110-volt source.

V1.E6.21.3.2. **(Added)(AF)** The test power source must be incapable of initiating the explosive item being tested. **(T-1).** Where greater power is used, provide positive safeguards to prevent delivery of enough power to initiate the item. **(T-1).**

V1.E6.21.3.3. **(Added)(AF)** Unless the test equipment is incapable of initiating the item being tested, operational shields must be provided, where needed, to protect personnel from injury (see paragraph **V1.E9.3.2.**). **(T-1).**

V1.E6.21.3.4. **(Added)(AF)** Special attention must be given to the ventilation requirements of equipment containing vacuum tubes and the possibility of malfunction of equipment using resistors and other devices for limiting testing power. **(T-1).**

V1.E6.21.3.5. **(Added)(AF)** The explosive item, test equipment, and leads must be protected from exposure to electromagnetic (induction and radiation fields) and electrostatic energy of more than an order of magnitude less than that required to initiate an explosion (see AFI 91-208). **(T-1).**

V1.E6.22. (ADDED)(AF) USE OF LIVE EXPLOSIVES FOR WEAPONS SYSTEM TESTING. Do not use live explosives items for verification, validation, or electrical testing of aircraft or other weapons systems except as follows:

V1.E6.22.1. **(Added)(AF)** The conduct of research, development, test and evaluation (RDT&E) and operational test and evaluation flight testing or "Built-In Test" checks or other low-current aircraft testing with live explosives installed, as long as doing so does not conflict with other applicable guidance such as TO 11A-1-33.

V1.E6.22.2. **(Added)(AF)** If an inert item is available, but a live item is scheduled to be used, provide the MAJCOM's Munitions Division (A4W), Weapons Safety (SEW), and Operations Training (A3T) with the test plan and a risk assessment that includes appropriate personnel protection for their approval (see section **V1.E9.3.**). **(T-1).**

V1.E6.22.3. **(Added)(AF)** If an inert item is not in the inventory and a live item is used, only qualified personnel with test squadron commander approval will perform the test. **(T-1).** Coordinate test plans with the weapons safety office.

V1.E6.22.4. **(Added)(AF)** If an inert item is not in the inventory and a live item is used, operational command personnel can perform the test provided approval is obtained from, and the test plan and a risk assessment (including appropriate personnel protection) is approved by MAJCOM, A4W, SEW, and A3T (see section **V1.E9.3.**).

V1.E6.22.5. **(Added)(AF)** Live weapons are used for validation and verification testing in the development of EOD technical procedures IAW DoDD 5160.62.

V1.E6.23. (ADDED)(AF) PLACES OF PUBLIC ASSEMBLY. In-use small arms ammunition HD 1.4S may be carried into places of public assembly. Because of varying circumstances, MAJCOM will determine authorization to carry all other in-use AE (except HD 1.1) into places of public assembly and incorporated into the MAJCOM supplement to this manual. HD 1.1 AE will not be taken into places of public assembly except when required by immediate security needs.

V1.E6.24. (ADDED)(AF) STATIC OR PUBLIC DISPLAYS.

V1.E6.24.1. **(Added)(AF)** Refer to AFI 11-209, AFMAN 10-1004, and TO 00-80G, for procedures concerning display of aircraft.

V1.E6.24.2. **(Added)(AF)** Do not display, load, or install live explosives items on display aircraft. Do not render explosives items inert for this purpose unless authorized by the system's

program manager. Paragraphs **V1.E6.24.3.** and **V1.E6.24.4.** specify exceptions for aircraft on display.

V1.E6.24.3. **(Added)(AF)** Remove live or expended ammunition from aircraft gun systems or safe the gun systems mechanically and electrically before placing the aircraft on display.

V1.E6.24.4. **(Added)(AF)** Operational aircraft may be displayed without removing egress and aircrew flight equipment explosive components, including captive missiles with HD 1.4 items only, provided:

V1.E6.24.4.1. **(Added)(AF)** Proper TO safety precautions are followed.

V1.E6.24.4.2. **(Added)(AF)** Visiting personnel do not have access to explosives items or their actuating controls. Ensure constant surveillance of visiting personnel to prevent such access.

V1.E6.24.5. **(Added)(AF)** Remove ejection cartridges from external stores release systems and ensure safety pins and devices cannot be easily removed.

V1.E6.24.6. **(Added)(AF)** Munitions displays must be marked IAW TO 11A-1-53, and certified IAW TO 11A-1-60. **(T-1).**

V1.E6.25. (ADDED)(AF) FIREWORKS DISPLAYS AND AIRSHOW EVENTS.

Commercial fireworks are extremely hazardous, even in the hands of trained experts. Safety personnel will ensure all safety requirements are provided to the base contracting office prior to the selection of the commercial firm that will be conducting the display. **(T-1).** For additional guidance see AFMAN 10-1004.

V1.E6.25.1. **(Added)(AF)** Regular Air Force personnel and on-duty Air Force civilian personnel will not take part in the transportation, storage, and setup or functioning of commercial fireworks for on-installation fireworks displays. **(T-1).**

V1.E6.25.2. **(Added)(AF)** Units must contract with properly licensed commercial firms to provide all necessary transportation, storage and security, setup, and functioning of fireworks for on-installation displays. **(T-1).** Contractors must comply with safety guidelines in NFPA 1123 and AFI 91-202 for Contract Performance Assessment. **(T-1).**

V1.E6.25.3. **(Added)(AF)** All off-installation opportunities to store commercially purchased explosives intended for use in USAF sponsored (on-installation) air shows must be exhausted prior to considering use of the Munitions Storage Area (MSA) or other sited on-installation facilities (see sections **V4.E5.21.** and **V1.E6.10.**). **(T-1).**

V1.E6.25.3.1. **(Added)(AF)** Only store commercial explosives having an approved safety data sheet (SDS), DOT or other federally recognized certification identifying the items HD, NEW, and CG.

V1.E6.25.3.2. **(Added)(AF)** Commercial explosives must be packaged in the original shipping configuration. **(T-1).**

V1.E6.25.3.3. **(Added)(AF)** Separate commercial and DoD explosives by a minimum of IMD.

V1.E6.25.3.4. **(Added)(AF)** Commercial explosives will be handled, stored, and transported by the commercial firm responsible for the explosives display. Munitions personnel will only escort contract personnel to and from the storage facility and open the facility for contractor access. **(T-1).**

V1.E6.25.4. **(Added)(AF)** Commercially purchased explosives will not be handled or transported by DoD (civilian or military) personnel on or off-duty. **(T-1).** Exception: EOD personnel providing emergency assistance or response may handle or transport commercial explosives (e.g., life-saving attempts, preserving high value military resources, or operating under specific approval from MAJCOM).

V1.E6.25.5. **(Added)(AF)** Commercial firms responsible for the explosives display must be properly licensed and insured. **(T-1).**

V1.E6.25.5.1. **(Added)(AF)** Commercial firms will comply with all established DoD safety regulations. **(T-1).**

V1.E6.25.5.2. **(Added)(AF)** Commercial firms will take all unused and expended munitions items with them off-installation at the completion of the display. **(T-1).**

V1.E6.25.5.3. **(Added)(AF)** Commercial firms will ensure fire extinguishers and properly equipped vehicle for explosives transportation are provided. **(T-1).**

V1.E6.25.6. **(Added)(AF)** Display site will meet the requirements of paragraphs **V5.E3.2.12.**, **V5.E3.2.11.1.1.**, and **V5.E3.2.11.3.** and the following:

V1.E6.25.6.1. **(Added)(AF)** Will be freshly mowed or pre-burned within 48 hours of the display. **(T-1).** For controlled burns contact the Wildland Fire Program Manager, Installation Fire Chief, and refer to AFI 32-2001 and AFI 32-7064.

V1.E6.25.6.1.1. **(Added)(AF)** If the area is mowed, it is highly recommended the display area be saturated with water the night prior to the show.

V1.E6.25.6.1.2. **(Added)(AF)** Area will be inspected for rock and other debris which could contribute to a secondary fragment hazard. **(T-1).** Items discovered will be removed from the site. **(T-1).**

V1.E6.25.6.2. **(Added)(AF)** If USAF resources or equipment are to be used, the responsible installation commander must accept the risk for the loss of the resources and any associated damages if this option is elected. **(T-1).** If USAF fuel resources are used, they will be

delivered in portable (fuel bowser) delivery systems prior to the explosives being delivered to the site. **(T-1).**

V1.E6.25.6.3. **(Added)(AF)** Crowd lines for demonstrations will be the greater of paragraph **V5.E3.2.6.1.1.** or by separation specified in the International Council of Airshows, "Pyrotechnics and Special Effects for Air Shows". **(T-2).** Request a copy from the contractor providing pyrotechnics for the air show.

V1.E6.25.7. **(Added)(AF)** Installation WSMs with the assistance of Munitions, EOD, Base and Airfield Operations, Legal, and Fire Department personnel will complete a comprehensive explosives risk assessment for the scheduled explosives display event and forward to the MAJCOM/SEW for concurrence. **(T-1).** The assessment will include:

V1.E6.25.7.1. **(Added)(AF)** A scaled map of the display site with applicable safe zones depicted. **(T-1).**

V1.E6.25.7.2. **(Added)(AF)** A list of all compensatory measures used in the Risk Assessment to meet required safety standards. **(T-1).**

V1.E6.25.7.3. **(Added)(AF)** A list of explosives being used in the display (i.e., nomenclature, HD, and NEW, quantity). **(T-1).**

V1.E6.25.7.4. **(Added)(AF)** Scheduled sequence of events for the display cradle to grave (timeline and explanation of event). **(T-1).**

V1.E6.25.7.5. **(Added)(AF)** Severe weather action or evacuation plan. **(T-1).**

V1.E6.25.7.6. **(Added)(AF)** Misfire or dud procedures. **(T-1).**

V1.E6.25.7.7. **(Added)(AF)** Responsible commanders acceptance of risk. **(T-1).**

V1.E6.25.8. **(Added)(AF)** Over flight of the explosives demonstration site will be restricted to no closer than 500 feet aboveground level by either DoD or commercial aircraft. **(T-1).**

V1.E6.26. (ADDED)(AF) HUNTING.

V1.E6.26.1. **(Added)(AF)** Commanders will ensure hunting will not hazard explosives stored on open pads or in light structures. **(T-1).**

V1.E6.26.2. **(Added)(AF)** Hunting may be permitted in and around the MSA if PTR distance is maintained from all sited explosives facilities. This paragraph does not apply to Bird or Wildlife Aircraft Strike Hazard (BASH) and Entomology functions. The local commander issues written permission and develops local operating instructions for hunting around MSAs on an installation. **(T-1).**

V1.E6.26.3. **(Added)(AF)** MAJCOMs may require additional procedures or restrictions due to unique circumstances or conditions.

V1.E6.27. (ADDED)(AF) TRAINING INVOLVING BLANK AMMUNITION (INCLUDING DYE-MARKING CARTRIDGES). Firing weapons (.50 caliber or less) using blank ammunition is permitted (including within an explosives storage area) but is subject to safety and operational requirements found in the specific weapons TO, AFMAN 31-129, AFI 36-2654, and the following requirements:

V1.E6.27.1. **(Added)(AF)** Develop written procedures containing the following provisions:

V1.E6.27.1.1. **(Added)(AF)** Use of a designated disinterested official to certify only blanks are loaded. **(T-1).**

V1.E6.27.1.2. **(Added)(AF)** Provision of readily available fire extinguishers. **(T-1).**

V1.E6.27.1.3. **(Added)(AF)** Misfire procedures. **(T-1).**

V1.E6.27.1.4. **(Added)(AF)** Expended brass turn-in procedures. **(T-1).**

V1.E6.27.1.5. **(Added)(AF)** Notification of appropriate agencies (e.g., safety, munitions flight chief, fire department, hospital, and Security Forces). **(T-1).**

V1.E6.27.2. **(Added)(AF)** Coordinate written procedures with the installation weapons safety office. **(T-1).** Obtain approval from the explosives storage area commander or flight chief when blanks are used within an explosives storage area. **(T-1).**

V1.E6.27.3. **(Added)(AF)** Except for security forces conducting required training, all other training will be done at a minimum of PTR separation from sited explosives facilities. **(T-1).**

V1.E6.28. (ADDED)(AF) MILITARY WORKING DOG EXPLOSIVES. Military Working Dog explosives training aids (including HD 1.1) may be transported and handled by qualified personnel in areas that provide realistic and effective training, see AFI 31-121.

V1.E6.28.1. **(Added)(AF)** Preclude exposure of personnel not related to the training through prudent scheduling and selection of training sites. Provide non-essential personnel separation per paragraph **V4.E5.17.4. (T-1).**

V1.E6.28.2. **(Added)(AF)** Post proper fire symbols and explosives operation signs at training sites (see **Volume 1 – Enclosure 10**). **(T-1).**

V1.E6.28.3. **(Added)(AF)** Train using locally written instructions (see section **V1.E6.12.**). **(T-1).** These instructions must include a documented post-training inventory of explosives samples ensuring no explosives are inadvertently left at the training site or discarded. **(T-1).**

V1.E6.28.4. **(Added)(AF)** Inform the weapons safety office, Fire Department, and EOD (if applicable) before conducting operations. **(T-1).**

V1.E6.29. (ADDED)(AF) REPAIRING CONTAINERS. Except as allowed in section **V1.E6.33.**, do not repair containers of explosives in storage facilities containing other explosives. **(T-1).**

V1.E6.30. (ADDED)(AF) REMOTELY CONTROLLED OPERATIONS. Provide personnel protection per paragraph **V1.E9.3.2.** and site per **Volume 1 – Enclosure 7** and **Volume 3 – Enclosure 3**. **(T-1).** Develop locally written instructions to ensure operations are terminated when operating or related personnel perform duties at distances or locations not providing the required protection (see section **V1.E6.12.**). **(T-1).**

V1.E6.31. (ADDED)(AF) FLIGHTLINE MUNITIONS HOLDING AREAS. Where practical and when it will not create an airfield obstruction or foreign object debris hazard identify these areas by a physical boundary (such as rope and stanchions). Post signs to keep unauthorized personnel out of the area and to prohibit smoking within 50 feet. Post explosives limits and ensure authorizations are not exceeded. Provide fire extinguishers and post fire symbols. If providing permanent shelter for personnel, position missiles so the shelter is out of radial alignment with the warheads. Secure according to AFI 31-101 and DoDM 5100.76 or return munitions to MSA for storage.

V1.E6.32. (ADDED)(AF) SECURITY RESPONSE TEAM AMMUNITION AT THE MISSILE ALERT FACILITY (MAF). Ammunition issued to security response team members performing duties at the MAF is considered "in use" and explosives siting and licensing requirements do not apply. The Security Control Center is the only authorized location for maintaining 40 mm ammunition while in use inside the MAF. Applicable units will use section **V1.E6.12.** and this paragraph to develop locally written instructions that prescribe acceptable practices to ensure maximum protection of personnel when security response team ammunition is present at the MAF. **(T-1).**

V1.E6.33. (ADDED)(AF) OPERATIONS IN EXPLOSIVES STORAGE SPACES CONTAINING EXPLOSIVES. AE containers will not be opened for the purpose of issuing items from storage locations. **(T-1).** The following operations are authorized in explosives storage spaces:

V1.E6.33.1. **(Added)(AF)** Palletizing, removing and replacing shipping crates incidental to transportation.

V1.E6.33.2. **(Added)(AF)** Replacing unserviceable strapping on boxes.

V1.E6.33.3. **(Added)(AF)** Necessary functional testing or sampling specifically authorized by technical data for performance in a storage location (e.g., checking color-coded humidity indicators). Testing engineers will coordinate proposed testing and sampling authorizations with the Nonnuclear Munitions Safety Board (NNMSB). **(T-1).**

V1.E6.33.4. **(Added)(AF)** Opening bolted or latched special storage containers housing self-contained weapons or missiles for authorized testing, missile reprogramming, sampling or transfer to transport trailer or vehicle, and installing control surfaces and argon bottles on AIM-9 series missiles.

V1.E6.33.5. **(Added)(AF)** Minor repair, cleaning, painting or re-stenciling of AUR or containers. Solvents and paints used must not create a hazardous atmosphere within the storage space. **(T-1).** Bioenvironmental or fire department services will evaluate the potential for hazardous atmospheres (see **Volume 2**). **(T-1).**

V1.E6.33.6. **(Added)(AF)** Removing bomb or CBU fuze well plugs for inspection if they can be easily unscrewed as prescribed in the TO. Remove plugs from the storage location for cleaning. If the plug binds or there is evidence of exposed explosives, move bombs to an operating location before starting repairs. Clean threads and cavities with approved cleaning solvents.

V1.E6.33.7. **(Added)(AF)** Opening outer containers to remove inner packages. Complete any further processing of these items in an approved operating location.

V1.E6.33.8. **(Added)(AF)** Opening "lite" boxes for inventory purposes.

V1.E6.33.9. **(Added)(AF)** Opening containers of HD 1.4 explosives to allow inventory. Unpack, inspect, and repack in the storage location if building content is limited to HD 1.4 items.

V1.E6.33.10. **(Added)(AF)** Some repairs and minor modifications of large missile motors may be accomplished in missile storage facilities. A risk assessment, reviewed by weapons safety, must be accomplished showing the risk to move the motor is greater than the risk to perform the work in the storage location (see **Volume 1 – Enclosure 9**). **(T-1).**

V1.E6.33.11. **(Added)(AF)** Nuclear weapons maintenance in a WSV-configured HAS or PAS, consistent with applicable weapon system safety rules.

V1.E6.33.12. **(Added)(AF)** Permissive action link operations, minor surface repair, cleaning, or stenciling of weapons or containers is authorized for nuclear weapons in any explosives storage space IAW applicable weapons system safety rules (WSSRs) and technical orders (TO).

V1.E6.33.13. **(Added)(AF)** Other operations as approved by AFSEC/SEW based on a risk assessment and mission requirements (see **Volume 1 – Enclosure 9**).

V1.E6.34. (ADDED)(AF) SELECTION OF EXPLOSIVES STORAGE METHOD.

V1.E6.34.1. **(Added)(AF)** ECM storage is preferable for all types of explosives (see section **V2.E5.5.**). From an explosives safety and reliability standpoint, give priority to the use of ECMs for items requiring protection from the elements, long-term storage, or high security protection.

V1.E6.34.2. **(Added)(AF)** Indoor storage is preferable for all types of explosives and is mandatory for bulk HE, solid propellants and pyrotechnics, except as allowed by paragraph **V1.E6.39.2.2.**

V1.E6.34.3. **(Added)(AF)** Outdoor storage is considered a temporary expedient. Use only when coordinated with the wing Safety Office, Security Forces, and approved by the Maintenance Group Commander (or equivalent), or as allowed per section **V2.E5.6.** barricaded modules.

V1.E6.34.4. **(Added)(AF)** Where outdoor storage is approved, consider the use of barricaded open storage modules for high-density storage in a limited land area (see section **V2.E5.6.**).

V1.E6.34.5. **(Added)(AF)** Any magazine or warehouse-type building that gives protection from the weather and meets QD and security requirements is allowed for storing explosives.

V1.E6.34.6. **(Added)(AF)** Units may use other types of standard magazines built according to approved drawings. MAJCOMs may approve use of existing magazines of other descriptions (including contractors' facilities) if they provide the proper degree of protection and safety.

V1.E6.35. (ADDED)(AF) EXPLOSIVES STORAGE IN OPERATING LOCATIONS.

Explosives may be stored in an operating location when operations are not being conducted, provided all other storage criteria are met.

V1.E6.36. (ADDED)(AF) EXPLOSIVES STORAGE FACILITY MAINTENANCE.

V1.E6.36.1. **(Added)(AF)** Practice good housekeeping in all locations.

V1.E6.36.2. **(Added)(AF)** Keep structures in good condition and suitable for the storage of munitions types and HDs involved.

V1.E6.36.3. **(Added)(AF)** Certain items containing explosives have stringent temperature limitations (see applicable TO). Take precautions to ensure these limits are not exceeded.

V1.E6.37. (ADDED)(AF) EXPLOSIVES STOCKS MAINTENANCE.

V1.E6.37.1. **(Added)(AF)** Keep outer containers in good condition and securely closed.

V1.E6.37.2. **(Added)(AF)** Stacks of containers must be stable and arranged in magazines or other approved locations according to storage drawings or directives. **(T-1).**

V1.E6.37.3. **(Added)(AF)** Provide ventilation when required by civil engineering, logistics and health directives.

V1.E6.37.4. **(Added)(AF)** Block storage is allowed if stack ventilation is maintained when required by civil engineering, logistics or health directives.

V1.E6.37.5. **(Added)(AF)** Maintain aisles so each stack may be inspected.

V1.E6.37.6. **(Added)(AF)** Inert and live AE or munitions components may be stored together, however, physically separate inert items from the live items they represent.

V1.E6.38. (ADDED)(AF) MARKING OF EXPLOSIVES STOCKS.

V1.E6.38.1. **(Added)(AF)** Keep boxes properly closed and clearly marked to show contents and quantity. Requirements of TO 11A-1-10 and the item TO apply.

V1.E6.38.2. **(Added)(AF)** For dangerously unserviceable, unserviceable, or suspended lots, mark each package or stack to show its exact status. The markings must be clear to prevent inadvertent issue or loss of information. **(T-1).**

V1.E6.38.3. **(Added)(AF)** Properly packed AE may not be stored with loose AE items, single inner packages (nonmetal), or explosives in unserviceable containers.

V1.E6.38.4. **(Added)(AF)** Properly packed AE may be stored with nonstandard boxes of AE IAW CG.

V1.E6.39. (ADDED)(AF) MUNITIONS IN AUSTERE AREAS.

V1.E6.39.1. **(Added)(AF)** The austere area provisions of paragraph **V1.E6.39.2.** for explosives storage areas are authorized for use in:

V1.E6.39.1.1. **(Added)(AF)** All zones where hostilities exist.

V1.E6.39.1.2. **(Added)(AF)** Areas approved by Pacific Air Forces (PACAF), United States Air Forces in Europe-United States Air Forces Africa (USAFE-AFAFRICA) and United States Air Forces Central (USAFCENT), where arrangement under section **V6.E3.5.** allows their application.

V1.E6.39.1.3. **(Added)(AF)** All bare or limited bases.

V1.E6.39.1.4. **(Added)(AF)** Other areas as may be approved by AFSEC/SEW.

V1.E6.39.2. **(Added)(AF)** Austere Area Provisions.

V1.E6.39.2.1. **(Added)(AF)** Minimum separations must prevent simultaneous detonation of explosives on opposite sides of an approved barricade and minimize the possibility of later, non-simultaneous propagating explosions. **(T-1).** Use greater separations where possible.

V1.E6.39.2.2. **(Added)(AF)** Open storage is authorized for all HD of munitions and explosives. Give priority for cover to items requiring protection from the elements, considering the type of packing material involved.

V1.E6.39.2.3. **(Added)(AF)** Avoid single stacks of large quantities of mass-detonating explosives. Smaller stacks may limit losses due to accident or enemy action and often results in decreased land area requirement. Smaller stacks reduce the distance required between the explosives storage area and other exposures, such as flightline areas, inhabited buildings, or bulk petroleum, oils, and lubricants (POL) storage.

V1.E6.39.2.4. **(Added)(AF)** When normal aboveground magazine separation is not feasible, use barricaded open storage modules (see section **V2.E5.6.**). Large quantities of explosives may be stored in this manner with relative safety.

V1.E6.39.2.5. **(Added)(AF)** If land is scarce and covered storage is necessary, consider the use of approved steel arch ECMs. These sectionalized, corrugated-arch structures allow storage of maximum amounts of mass-detonating explosives with minimum space between ECMs. They are available in any practical length in widths up to 30 feet. The commonly-used earth cover gives acceptable protection against propagation of an explosion from one ECM to another.

V1.E6.40. (ADDED)(AF) PRIVATELY-OWNED AMMUNITION. Store privately-owned ammunition allowed on an Air Force installation as follows:

V1.E6.40.1. **(Added)(AF)** Base housing residents (i.e., military families living in government-provided family housing) can store their privately-owned ammunition in their quarters.

V1.E6.40.2. **(Added)(AF)** Billeting and dormitory residents cannot store their privately-owned ammunition in their quarters. **(T-1).**

V1.E6.40.3. **(Added)(AF)** Store privately-owned ammunition in a licensed or sited explosives storage location (except as noted in paragraph **V6.E3.6.1.4.23.**).

V1.E6.40.4. **(Added)(AF)** Do not store privately-owned ammunition in an MSA (see paragraph **V1.E6.10.1.1.**). **(T-1).**

V1.E6.41. (ADDED)(AF) GOVERNMENT ARMS AND AMMUNITION. MAJCOMs may authorize the storage of DoD firearms in explosives storage facilities within the MSA to meet operational commitments. Coordinate with MAJCOM/A4/SEW to authorize storage.

V1.E6.42. (ADDED)(AF) EXPLOSIVES TRANSPORTATION. This section gives safety requirements for transporting explosives and for operating vehicles and materials handling equipment (MHE) in explosives locations. In-use ammunition items that accompany security forces or other defense forces are not governed by transportation rules. Physically secure all

onboard ammunition not loaded in a weapon or secured to an individual for immediate use during transport. QD criteria does not apply to munitions and explosives in the transportation mode. Precautions should be taken to ensure minimum exposure of people and property during all phases of transportation. Limit the time munitions and explosives are in the transportation mode to the absolute minimum necessary to complete the task.

V1.E6.42.1. (Added)(AF) Federal Regulation. 49 CFR regulates commercial shipments of hazardous material, including explosives, by rail, motor vehicle, cargo aircraft and ship within the U.S. (except maritime explosives). 49 CFR rules only apply on military installations when specifically prescribed. For transporting explosives and munitions on an Air Force installation use the criteria in this manual. For transporting military explosives and munitions off an Air Force installation, but in an Air Force conveyance and operated by Air Force personnel, apply the rules in 49 CFR as prescribed in Air Force and Department of Defense (DoD) directives.

V1.E6.42.2. (Added)(AF) DoD Directives. In addition to this manual, the following directives apply to military shipments of hazardous materials within the defense transportation system: AFJI 11-204, AFMAN 13-526, AFMAN 24-204, AFMAN 24-306, TO 11N-45-51 plus supplements, Defense Transportation Regulation (DTR) 4500.9-R-Part II, AFMAN 24-210, AFI 24-602, Volume 2, AFI 24-301, and MIL-STD-129.

V1.E6.42.3. (Added)(AF) Local Laws Regulating Transportation of Explosives and Dangerous Articles. Each state and nearly all local and foreign governments have laws or ordinances regulating transportation of explosives and other dangerous articles within their jurisdiction. Obey local laws where state, local or host-nation governments have jurisdiction. Where there is exclusive federal jurisdiction, local laws may not apply. Where there is a conflict, contact your MAJCOM for clarification.

V1.E6.42.4. (Added)(AF) Hazard Classification Requirements for Transportation. Explosives, to be acceptable for transportation by any mode, must have an assigned hazard classification (HD; storage CG; DOT class, markings, shipping name and label; and United Nations serial number), except as noted in paragraph **V1.E6.42.5. (T-0).** Developmental items, test articles, components, and certain commercial items that contain explosives, but without a final classification must be assigned an IHC. See **Volume 1 – Enclosure 6** for hazard classification procedures.

V1.E6.42.5. (Added)(AF) Commercial Explosives Hazard Classification Requirements for Transportation. Commercial explosive items purchased for official use must have a hazard classification assigned IAW TO 11A-1-47 before transportation and use, except as provided in this paragraph. **(T-0).** Store, transport, or offer for transportation, commercial explosives that have not been examined, hazard classified, and approved by DoD IAW 49 CFR Part 173.56 (b) (2) provided one of the following paragraphs is complied with:

V1.E6.42.5.1. **(Added)(AF)** The explosive has been designated, in writing, by the Associate Administrator for Hazardous Materials Safety (AAHMS), Research and Special Programs Administration, DOT, as "Not Regulated."

V1.E6.42.5.2. **(Added)(AF)** The explosive has been approved for transportation, in writing, by the AAHMS in a Classification of Explosives, Competent Authority Approval, or in a Confirmation of Acceptability of a foreign Competent Authority Approval, and the hazard classification of the explosive is HD 1.4S.

V1.E6.42.6. (Added)(AF) Compatibility of Explosives During Transportation. 49 CFR Part 177.848 provides guidance for separating and segregating hazardous materials, including different explosives, in the various modes of commercial transportation. Explosives transported on a public highway by Air Force motor vehicles, operated by Air Force personnel, will be separated and segregated using the rules in 49 CFR, except as otherwise provided in this manual or other applicable military directives.

V1.E6.42.6.1. **(Added)(AF)** When an item containing explosives is assigned to other than Hazard Class 1 because of the predominant hazard, a CG is still assigned (see paragraph **V1.E6.2.1.1.1.**). For these items, compatibility for transportation, and temporary storage incident to transportation, must be based on rules for the assigned hazard class, not on the CG. The CG for these items applies only to long term storage.

V1.E6.42.6.2. **(Added)(AF)** Cargo-configured items that may be shipped in the same Air Force aircraft are listed in AFMAN 24-204 and TO 11N-45-51 series. Procedures for submitting a compatibility waiver for air transportation of explosives is contained in AFMAN 24-204. The following exceptions to the above standards are permitted:

V1.E6.42.6.2.1. **(Added)(AF)** Development of new items for transportation by combining previously hazard classified components into an increased state of assembly to meet a valid military need. Use normal hazard classification procedures in TO 11A-1-47 to obtain the hazard classification approval for transportation applicable to the new configuration.

V1.E6.42.6.2.2. **(Added)(AF)** Movement of assembled or partially assembled explosive items between servicing explosives locations and aircraft loading points or other such locations on the same military installation, when the assembly has not been classed and approved as provided in TO 11A-1-47, but is necessary to meet valid operational requirements. If the operational requirement is expected to continue or can be anticipated, seek hazard classification approval.

V1.E6.42.6.2.3. **(Added)(AF)** Movement in a military vehicle of minimum quantities of explosive items necessary for demolition operations, to include proficiency training. blasting caps, demolition explosives and unserviceable (but not dangerously unserviceable) munitions may be transported by the same vehicle, provided MAJCOM approves the mixing of all applicable CGs. See paragraph **V1.E6.42.20.** for restrictions concerning the carrying of explosives inside passenger compartments.

V1.E6.42.6.2.4. **(Added)(AF)** Transport dangerously unserviceable munitions in a separate military vehicle. If transport in a separate military vehicle is not possible, segregate and sandbag from other explosives being transported. Transport dangerously unserviceable munitions according to paragraph **V1.E6.42.10.**

V1.E6.42.6.2.5. **(Added)(AF)** Movement by a DoD-owned vehicle, operated by DoD personnel, of mixed loads consisting of components (not otherwise compatible for transportation), in the numbers and of the type's necessary to assemble a number of complete rounds of a single type, when essential to meet operational requirements, and when separate (unmixed) movement is not feasible. See DTR 4500.9-R-Part II for procedures where such exceptions to compatibility rules are required.

V1.E6.42.6.2.6. **(Added)(AF)** Movement by a DoD-owned vehicle, operated by DoD personnel, or a mixed load of small quantities of items (not to exceed 1,000 pounds total NEWQD) from CGs B through J, N, and S. The NEWQD of HD 1.4S items need not be included.

V1.E6.42.6.2.7. **(Added)(AF)** Movement by Security Forces of mixed loads of ammunition in performance of their duties.

V1.E6.42.7. (Added)(AF) Compatibility of Explosives During Temporary Storage. Table **V1.E6.T1.**, 49 CFR, or AFMAN 24-204 criteria may be used for temporary mixing of explosives while undergoing packing and unpacking operations or while in temporary storage awaiting shipment. Do not store other dangerous articles with these explosives. Shipping, receiving and storage facilities must comply with QD criteria of this manual for the HD involved.

V1.E6.42.8. (Added)(AF) Packaging. Packaging of explosives offered for shipment must comply with TO 11A-1-10, 49 CFR, Parts173.1 – 173.477, or AFMAN 24-204 specifications, as appropriate. **(T-0).** Follow these instructions:

V1.E6.42.8.1. **(Added)(AF)** Locally made packaging must meet the construction and marking requirements in 49 CFR, or must conform to a military Certification of Equivalency for the item being packed. **(T-0).**

V1.E6.42.8.2. **(Added)(AF)** Mark each package to identify contents. The DOT marking consist of the Proper Shipping Name; United Nations Identification Number; and the DOT EX-number, NSN or other product code as specified in the hazard classification. See AFMAN 24-204, TO 11N-45-51, or the JHCS, as appropriate. For Transportation Protective Service Material, mark IAW Defense Transportation Regulations and MIL-STD-129.

V1.E6.42.8.3. **(Added)(AF)** If an item is not listed in above references, contact 406 SCM/GULAA, Hill AFB UT 84056-5609, per instructions in TO 11A-1-10, for the required data.

V1.E6.42.8.4. **(Added)(AF)** Do not open or repair a package in a railcar, motor vehicle, or aircraft unless it is essential for inflight safety or to safely unload a damaged package. Avoid re-nailing boxes because of the potential to strike the explosives with the nail.

V1.E6.42.8.5. **(Added)(AF)** If a package is damaged or defective, remove it from the transporting vehicle at the earliest opportunity for repair.

V1.E6.42.9. (Added)(AF) Shipment of Damaged Explosives or Explosives that Failed To Function. If it is necessary to ship an explosive item that has been damaged, subjected to abnormal force or has failed to function, ask the responsible program manager for shipping, packing, marking and safety instructions. For damaged or failed-to-function AE, EOD must determine that it is safe to ship prior to munitions requesting shipping instructions from the program manager for the munition. **(T-1).**

V1.E6.42.10. (Added)(AF) Transporting Dangerously Unserviceable Explosive Items for Disposal. Package and mark dangerously unserviceable items such as partially burned signals as specified in the item TO or EOD technical publications. Consult EOD before transporting dangerously unserviceable items. **(T-1).** DoD personnel who are properly trained in procedures to be followed and specific hazards of the material may routinely transport dangerously unserviceable items and explosive residue. Inspect vehicles using DD Form 626. **(T-1).**

V1.E6.42.11. (Added)(AF) Explosives Movement Routes on-Installation. Designate the safest possible primary and alternate explosives movement routes to cover all phases of movement. **(T-1).** Identify routes and any limitations on explosives quantities by HD on-installation maps. **(T-1).** Avoid built-up areas and key, mission-oriented facilities and equipment to the maximum extent possible. Movements of munitions within an MSA, airfield or to and from licensed storage locations and transportation of explosives in support of the training of working dogs are not restricted to designated routes.

V1.E6.42.12. (Added)(AF) Incoming Explosives Shipments. Review guidance in the Transportation Facilities Guide maintained by Surface Deployment and Distribution Command (SDDC). Contact the base transportation officer for this guide. The base transportation officer is responsible for maintaining the base information current in the SDDC database. Clearly state in notification procedures the NEWQD (and MCE if applicable), by HD, that can be received at unloading facilities (e.g., railheads, ports, hot cargo pads, etc.).

V1.E6.42.13. (Added)(AF) In-Transit Explosives Shipments or Secure Holding. When the SDDC or carrier requests temporary storage for in-transit shipments of explosives, DoD installations must accept arms ammunition and explosives (AA&E) shipments for safe haven or secure hold regardless of arrival time or final destination. **(T-0).** If safe haven or secure hold cannot be provided, the DoD activity will provide, in coordination with civil law enforcement authorities, assistance and escort to a suitable location. **(T-1).** Protection of shipment will be commensurate with the sensitivity of the AA&E. Under safe haven conditions or secure hold, explosives safety QD requirements must be considered, but these requirements will not eliminate the responsibility to provide safe haven or secure hold to mitigate shipment vulnerability. See **Volume 1 – Enclosure 3** for an event waiver if a properly sited location is not used. Furthermore, DoD installations and activities will provide a secure holding or safe haven for AA&E shipments during emergency (vehicle breakdowns, criminal, terrorist threat, etc.) and non-emergency conditions. **(T-1).** Coordinate with the base transportation officer to ensure the

Transportation Facilities Guide correctly reflects the NEWQD (and MCE if applicable), by HD, that can be held at the Secure Explosives Holding Area. See DTR, Part II, Chapter 205.Q, AFI 31-101, and AFI 10-2501 for information.

V1.E6.42.14. (Added)(AF) Inspection of Incoming Explosives Shipments. A representative of the LRS Commander will inspect all incoming motor vehicles carrying Hazard Class 1 explosives and other hazard class items that carry an explosives CG, to include HD 1.4 shipments more than 1,001 lbs, at a designated inspection station before further routing on-installation. **(T-1).**

V1.E6.42.14.1. **(Added)(AF)** Inspection stations do not require explosives siting if they are limited to the activities described in section **V4.E5.9.** Apply QD criteria per this manual if the inspection station is also used as explosives storage or suspect vehicle holding area. Do not perform vehicle inspections at the station if it is in use as an explosives storage area or suspect vehicle holding area. The inspection station may be used as an interchange yard. Remove vehicles promptly after the inspection is completed.

V1.E6.42.14.2. **(Added)(AF)** Inspect Defense Transportation System (DTS) scheduled vehicles using DD Form 626. Inspect non-DTS scheduled vehicles using a locally generated form approved by the LRS Commander and the WSM or use the DD Form 626.

V1.E6.42.14.3. **(Added)(AF)** Once a vehicle has passed the initial inspection, a visual inspection of the external condition of the cargo may be done at any suitable location, including the unloading point.

V1.E6.42.14.4. **(Added)(AF)** Move any vehicle found or suspected to be in a hazardous condition to a suspect vehicle holding area, isolated from other locations, by the proper QD criteria per section **V4.E5.10.**, unless it is more hazardous to move the vehicle.

V1.E6.42.15. (Added)(AF) Inspection of Outgoing Explosives Shipments. This paragraph does not apply to the departure of in-transit explosives shipments. Shipping activities will inspect all vehicles to be used for off-installation shipments of explosives before and after loading for compliance with safety regulations. **(T-1).**

V1.E6.42.15.1. **(Added)(AF)** Complete DD Form 626 according to DTR 4500.9-R- Part II, Chapter 204. Inspect non-DTS scheduled vehicles using a locally generated form approved by the LRS Commander and the WSM or use the DD Form 626. **(T-1).**

V1.E6.42.15.2. **(Added)(AF)** Maintain a record of the vehicle number, the type of explosive cargo, and the number of each seal applied to the vehicle. **(T-1).**

V1.E6.42.15.3. **(Added)(AF)** Drivers must be qualified to operate the vehicle and knowledgeable of the explosives being transported and associated hazards. **(T-1).** In addition, Air Force civilian drivers must have a Commercial Driver's License, with a hazardous materials endorsement, to transport explosives off a military installation. **(T-1).** See AFI 24-301.

V1.E6.42.15.4. **(Added)(AF)** Use DD Form 2890 to instruct drivers on the nature of their cargo, firefighting methods, and other specific precautions for the particular shipment. **(T-1).** Information on the preparation and use of DD Form 2890 is in DTR 4500.9-R-Part II, Chapter 204.

V1.E6.42.15.5. **(Added)(AF)** At overseas units, use bilingual instructions on the DD Form 626 where needed.

V1.E6.42.15.6. **(Added)(AF)** Use applicable technical data when special purpose vehicles are authorized to transport explosive loads.

V1.E6.42.15.7. **(Added)(AF)** Develop written procedures with the base LRS to ensure procedures and requirements for military vehicles or drivers transporting explosives (assembled or partially assembled in a delivery mode) across or on public highways from one part of a base to another are compliant with the DTR 4500.9-R-Part II, Chapters 204 and 205. Examples may include the transportation of munitions from a preparation area across the highway to the main base flightline, or on the highway to a nearby auxiliary field. If this is a daily operation, there must be an agreement with local authorities on any local restrictions to be imposed. **(T-1).** OCONUS locations must comply with host-nation requirements, including any notice requirements contained in host-nation law or applicable international agreements. **(T-1).** If host-nation law or applicable international agreements are silent on notification, OCONUS locations (outside of operational areas) should consider notifying host-nation authorities of the movement of explosives regardless of any legal obligation to do so.

V1.E6.42.15.8. **(Added)(AF)** Externally inspect commercial carriers used to move explosives over public highways from one area to another area of an installation before entering the second area. Inspection is not required if the carrier was escorted or under surveillance en route.

V1.E6.42.16. (Added)(AF) Interchange Yards. Use this location for the exchange of tractor-trailers between the common carrier and the base activity involved. Interchange yards do not require explosives siting if they are limited to the activities described in section **V4.E5.5.** Apply QD if the interchange yard is also used as explosives storage or suspect vehicle holding area. Do not perform vehicle interchange operations at the yard if it is in use as an explosives storage area or suspect vehicle holding area. The interchange yard may be used as an inspection station. Remove vehicles promptly.

V1.E6.42.17. (Added)(AF) Holding Yards. Move explosives-loaded vehicles to a holding yard if they cannot be dispatched to unloading points promptly. See section **V4.E5.8.** for holding yard siting requirements. Holding yards may be used for interchange and inspection activities.

V1.E6.42.18. (Added)(AF) Classification Yards. Where the volume of vehicle traffic necessitates, establish a classification yard primarily for receiving, classifying, switching, and dispatching explosives-laden vehicles. Classification yards do not require explosives siting if they are limited to the activities described in section **V4.E5.3.** Apply QD criteria per this manual

if the classification yard is also used as explosives storage or suspect vehicle holding area. Classification yards may also be used as interchange yards and vehicles will be removed promptly.

V1.E6.42.19. (Added)(AF) Transportation and Movement of Explosives by Motor Vehicle. The transportation and handling of explosives applies to DoD rental vehicles when used to transport DoD explosives on military installations. Do not transport DoD explosives in privately owned vehicles (POV) s under any circumstance. **(T-1).**

V1.E6.42.20. (Added)(AF) Transporting Explosives in Passenger Compartments. Do not transport explosives in a passenger compartment of a vehicle, except as authorized below.

V1.E6.42.20.1. **(Added)(AF)** Minimum essential personnel and limited quantities of HD 1.4, 1.3, and 1.2.2 explosives, as approved by the local OI, may be transported together in cargo portion of vehicles (including Metro type vans used on the flightline) or in vehicles used as runway supervisory units.

V1.E6.42.20.2. **(Added)(AF)** Egress system assembled components may be transported in the cargo compartment of Metro-type vehicles.

V1.E6.42.20.3. **(Added)(AF)** For emergency responses in vehicles without separate cargo compartments (e.g., robot vans, Metro-type vehicles, High Mobility Multipurpose Wheeled Vehicle (HMMWV), EOD Base Support Emergency Response Vehicle, Mine Resistant Ambush Protected (MRAP) family of vehicles); EOD units are authorized to transport minimum essential quantities of all HDs inside the vehicle. Ensure explosives are secured to prevent movement during transit. Separate incompatible explosives to the maximum extent possible.

V1.E6.42.20.4. **(Added)(AF)** Basic load munitions issued to emergency response personnel in the performance of their duties are exempt from these requirements. Basic loads can include HD 1.1 40 mm grenades, Light Anti-Armor Weapon (LAW) rockets, etc. However, comply with all requirements of paragraph **V1.E6.42.20.** for transportation of re-supply stocks ensuring explosive resupply stocks are secured to prevent movement during transit.

V1.E6.42.20.5. **(Added)(AF)** When units responsible for demolition operations are issued vehicles without separate cargo compartments, such vehicles may be used to transport minimum quantities of explosives necessary to support demolition. Use trailers to the maximum extent possible.

V1.E6.42.21. (Added)(AF) Transporting EIDs. When transporting items containing EIDs, fully consider EMR hazards (see AFI 91-208). Vehicles with plastic bed liners may be used to transport EIDs that are in their original sealed outer package, box, or container. Metal ammo-type containers may be used to transport EIDs in vehicles with plastic bed liners if the containers provide the protection required by paragraph **V1.E6.18.2.** and are bonded to the metal body of the vehicle.

V1.E6.42.22. (Added)(AF) Transporting Aircraft Seats and Survival Kits. Aircraft seats and survival kits with explosive devices installed must contain required safety pins and devices and be secured to prevent movement during transit. **(T-1).**

V1.E6.42.23. (Added)(AF) Packaging. Transport explosives in their approved storage and shipping packaging. **(T-1).** If less than a single shipping package is transported, pack the explosives separately from other items in enclosed, clearly marked metal or wooden containers. **(T-1).**

V1.E6.42.24. (Added)(AF) Placarding.

V1.E6.42.24.1. **(Added)(AF)** Use DOT placards as outlined in Subpart F of 49 CFR Parts 172.500 – 172.560. When transporting munitions off the installation in a foreign country comply with host-nation requirements. **(T-1).**

V1.E6.42.24.2. **(Added)(AF)** Commanders may omit placards on-installation where necessary to avoid attention of hostile forces. Instruct all personnel in proper emergency actions.

V1.E6.42.24.3. **(Added)(AF)** Where tow vehicle and trailer combinations are used on-installation, placard the tow vehicle on the front and the last trailer on the rear. **(T-1).** Placard explosives loaded trailers in between on each side. **(T-1).**

V1.E6.42.24.4. **(Added)(AF)** Placard materials handling equipment only when used in the same manner as a transport vehicle or trailer.

V1.E6.42.24.5. **(Added)(AF)** CG letters may be omitted from the placard if the vehicle remains on the installation.

V1.E6.42.24.6. **(Added)(AF)** Placards are not required when transporting nuclear weapons or on any explosives loaded vehicle in a nuclear weapons storage area.

V1.E6.42.24.7. **(Added)(AF)** Properly placard vehicles transporting canine explosive scent kits.

V1.E6.42.25. (Added)(AF) Motor Vehicle Inspection. Prior to use, inspect motor vehicles used to transport explosives to determine that:

V1.E6.42.25.1. **(Added)(AF)** Fire extinguishers are available, filled, and in good working order per paragraph **V1.E10.6.15.**

V1.E6.42.25.2. **(Added)(AF)** Electric wiring is in good condition and properly attached.

V1.E6.42.25.3. **(Added)(AF)** Chassis, motor, pan, and underside of body is reasonably free of oil, grease, and fuel.

V1.E6.42.25.4. **(Added)(AF)** Fuel tank and feed lines are secure and not leaking.

V1.E6.42.25.5. **(Added)(AF)** Brakes, steering, lights, horn, and windshield wipers are functioning properly.

V1.E6.42.25.6. **(Added)(AF)** Tires are properly inflated and serviceable IAW TO 36-1-191.

V1.E6.42.26. (Added)(AF) Load Protection and Stability.

V1.E6.42.26.1. **(Added)(AF)** Cover exposed ferrous metal in the cargo compartment before transporting explosives that are not packaged in DOT specified containers or equivalent. **(T-1).**

V1.E6.42.26.2. **(Added)(AF)** Use only static resistant and noncombustible or flameproof tops or coverings. **(T-1).**

V1.E6.42.26.3. **(Added)(AF)** Fasten safety chains between towing vehicles and trailers carrying explosives when lunette and pintle fastenings are used. **(T-1).** Safety chains are not required when using specifically designed breakaway control safety features prescribed by the pertinent TO.

V1.E6.42.26.4. **(Added)(AF)** Ensure lifting devices on vehicles or handling equipment have a serviceable mechanism designed to prevent sudden dropping of the load in the event of power failure. **(T-1).**

V1.E6.42.26.5. **(Added)(AF)** Do not extend loads on the tines of a forklift more than one-third of the height of the top tier of containers above the backrest. **(T-1).**

V1.E6.42.26.6. **(Added)(AF)** Ensure forklifts use skids or pallets to move containers of explosives, except when containers are designed with fully enclosed stirrups (360 degrees) for forklift tines. **(T-1).**

V1.E6.42.26.7. **(Added)(AF)** Munitions may be carried on forklift tines when the weapon body is long enough to be firmly supported on both tines and strong enough to prevent damage.

V1.E6.42.26.8. **(Added)(AF)** Ensure munitions loads (AE and inert AE components) on all types of vehicles and handling equipment are stable and secure before movement. Load stability is required for all movements, to include rewarehousing or other activities conducted between one or more storage magazines, storage pads or other operating location. For on-installation movements, munitions loads (AE and inert AE components) must be restrained, blocked, braced, tied down or otherwise secured to the vehicle to prevent movement and must not damage explosives or containers. **(T-3).**

V1.E6.42.26.9. **(Added)(AF)** Consider vehicle and handling equipment type, type of load, and the prevailing weather and road conditions when determining if safe transport is feasible. This guidance pertains to MSAs as well as applicable flightline operations.

V1.E6.42.27. (Added)(AF) Loading and Unloading.

V1.E6.42.27.1. **(Added)(AF)** Chock explosives loaded vehicles, munitions materials handling equipment (MMHE) (except MHU-196 and MHU-204 trailers) and MHE (trailers, universal ammunition loading system (UALS), etc.) during loading or unloading operations, or when parked and the driver is not behind the wheel. **(T-1).** Chocking MHE or MMHE is not required if the explosives load is lowered and completely resting on the ground.

V1.E6.42.27.2. **(Added)(AF)** To the maximum extent possible, position munitions cargo vehicles to permit loading and unloading from each side of the cargo bed. Access munitions from the side closest to the load unless access can only be obtained from one side.

V1.E6.42.27.3. **(Added)(AF)** Except as required in the event of an electrical storm (see section **V2.E4.6.**), do not leave explosives-laden vehicles unattended unless they are parked in a properly designated area, such as the weapons storage area, holding yard or flightline munitions holding area.

V1.E6.42.27.4. **(Added)(AF)** Do not load or unload explosives from a motor vehicle while the engine is running, except under the following conditions:

V1.E6.42.27.4.1. **(Added)(AF)** Where the engine is required to provide power to vehicle mechanical handling equipment used in loading and unloading the vehicle.

V1.E6.42.27.4.2. **(Added)(AF)** Where necessary for emergency operations or timing for exercises simulating execution of emergency plans. In this case, small loads or packages of explosives delivered to aircraft, requiring only momentary unloading time, may be removed from a vehicle while the motor is running.

V1.E6.42.27.4.3. **(Added)(AF)** Engines of diesel-powered vehicles may continue to run during loading or unloading of explosives except when exposed explosives or hazardous locations are involved.

V1.E6.42.27.4.4. **(Added)(AF)** Adequate ventilation is provided to prevent unnecessary build-up of exhaust gases.

V1.E6.42.27.4.5. **(Added)(AF)** Do not leave vehicles at aircraft or storage locations longer than needed to complete explosives loading or unloading. If a delay occurs, move the vehicle from location.

V1.E6.42.27.4.6. **(Added)(AF)** Refuel trucks before loading explosives.

V1.E6.42.28. (Added)(AF) Vehicle Refueling.

V1.E6.42.28.1. **(Added)(AF)** Refuel non-explosives loaded vehicles and equipment at least 100 feet from structures or sites containing explosives. **(T-1).**

V1.E6.42.28.2. **(Added)(AF)** When refueling explosives-loaded vehicles, maintain a bonded path between the tank being filled and the tank being emptied and ground the entire system. **(T-1).** Refer to section **V2.E3.4.** for further guidance on static grounding.

V1.E6.42.28.2.1. **(Added)(AF)** When refueling is completed, remove refueling vehicle from the storage area. **(T-1).**

V1.E6.42.28.2.2. **(Added)(AF)** Use the smallest available size of refueling unit. **(T-1).**

V1.E6.42.28.2.3. **(Added)(AF)** One person must be present during the entire operation. **(T-1).**

V1.E6.42.28.2.4. **(Added)(AF)b**During refueling, stop motors of vehicle being refueled and refueling truck (unless refueling truck motor drives the pump). **(T-1).**

V1.E6.42.28.2.5. **(Added)(AF)** In event of a fuel spill, immediately notify the base fire department. **(T-1).** Do not start motors of refueling truck or unit being refueled until area is rendered safe. **(T-1).**

V1.E6.42.29. (Added)(AF) Battery-Powered MHE. Battery-powered MHE is preferred for handling explosives and used when possible.

V1.E6.42.29.1. **(Added)(AF)** Mount electrical cables to prevent catching on stationary objects or damage by cutting or abrasion. Protect cables to prevent short-circuiting as far as practicable.

V1.E6.42.29.2. **(Added)(AF)** Securely fasten batteries and give battery boxes ample ventilation, with ventilation openings that prevent access to the cell terminals from the outside.

V1.E6.42.29.3. **(Added)(AF)** Equip with a dead-man switch and a main service switch that can be operated from the driving position.

V1.E6.42.30. (Added)(AF) Gasoline or Diesel-Powered MHE.

V1.E6.42.30.1. **(Added)(AF)** Equip with a standard muffler and air cleaner.

V1.E6.42.30.2. **(Added)(AF)** Ensure gas caps are in place.

V1.E6.42.30.3. **(Added)(AF)** If necessary, install a deflector plate to prevent overflow from the fuel tank from reaching motor or exhaust pipe.

V1.E6.42.30.4. **(Added)(AF)** On gravity feed fuel systems or on pump systems that can be siphoned, install an emergency shutoff valve at the fuel tank or in the feed line. **(T-1).**

V1.E6.42.30.5. **(Added)(AF)** Protect fuel lines from rupture due to vibration.

V1.E6.42.30.6. **(Added)(AF)** Securely fasten electrical connections to prevent accidental disconnection that might result in sparks or fire.

V1.E6.42.30.7. **(Added)(AF)** Do not use equipment in areas classified as hazardous locations.

V1.E6.42.31. (Added)(AF) Liquefied Petroleum (LP) and Compressed Natural Gas (CNG) Fueled Vehicles. Motor vehicles or other equipment used to transport explosives using LP or CNG for propulsion must have a fuel system which complies with the current edition of the NFPA 58, regarding Engine Fuel Systems.

V1.E6.42.32. (Added)(AF) Exposed Explosives Precautions. Do not use battery, gasoline or diesel-powered vehicles and materials handling equipment inside any structure or building containing exposed explosives. Use vehicles or equipment within the vicinity of structures containing exposed explosives providing:

V1.E6.42.32.1. **(Added)(AF)** Gasoline or diesel-powered units have exhaust system spark arrestors and, where applicable, carburetor flame arrestors (standard air cleaners).

V1.E6.42.32.2. **(Added)(AF)** Spark arrestors will meet military specifications for the particular equipment and are installed so they will not become clogged in normal operation (AFMAN 91-203, and TO 38-1-23).

V1.E6.42.32.3. **(Added)(AF)** Vehicle operators inspect spark arrestors before each daily use and clean them if there is an excess of carbon particles. **(T-1).**

V1.E6.42.33. (Added)(AF) Storage of Powered MHE. Store battery, gasoline, LP, CNG, or diesel-powered equipment in a magazine, storehouse or other suitable location that contains only non-explosives materials. Keep equipment at least 10 feet from combustible material. Keep aisles clear at all times and space to minimize spread of fire from one unit to another. Equipment essential for daily operations may be parked in fire-resistive buildings containing explosives. The following minimum requirements must be met:

V1.E6.42.33.1. **(Added)(AF)** Use properly rated fire walls and closed doors to completely separate equipment from bays, rooms or cubicles containing explosives. **(T-1).**

V1.E6.42.33.2. **(Added)(AF)** Ensure designed fire-resistant ratings for the enclosures containing explosives are not degraded. **(T-1).**

V1.E6.42.33.3. **(Added)(AF)** Battery charging must comply with AFMAN 91-203. **(T-1).**

V1.E6.42.33.4. **(Added)(AF)** Weapons safety and fire protection personnel must review the local situation for any additional measures necessary to enhance safety. **(T-1).**

V1.E6.42.34. (Added)(AF) Operating Powered MHE Inside Structures. Concentration of carbon monoxide in the operating area must not exceed the current occupational exposure limit. **(T-1).** Consult the local bioenvironmental engineer for a determination of exposure levels, applicable exposure standards, and recommended controls.

V1.E6.42.35. (Added)(AF) Maintenance of Vehicles Carrying Explosives.

V1.E6.42.35.1. **(Added)(AF)** Only operator inspection and maintenance normally related to the operation of a vehicle will be done on explosives-laden vehicles. **(T-1).** Such maintenance includes servicing with fuel, oil, air, lubrication and water, changing tires, fuses, hoses and drive belts, etc.

V1.E6.42.35.2. **(Added)(AF)** No maintenance will be done on an explosives-loaded vehicle or trailer that would increase the probability of fire or would require the use of heat-producing equipment. **(T-1).**

V1.E6.42.35.3. **(Added)(AF)** No restrictions are imposed on tractor maintenance when the tractor is separated by at least 100 feet from an explosives-loaded trailer.

V1.E6.42.35.4. **(Added)(AF)** Do not elevate a vehicle to shift the load or place excessive strain on the tie downs when tires are being changed. **(T-1).**

V1.E6.42.35.5. **(Added)(AF)** Vehicles carrying nuclear weapons are subject to the maintenance restrictions in TO 11N-45-51 series.

V1.E6.42.36. (Added)(AF) Transportation of Explosives by Rail. For operations involving rail cars, refer to the following regulations for safety devices, safeguards, design of equipment, rail car placarding, inspections, leakage, seals and sealing, loading, bracing, certificates, etc. Refer to 49 CFR Parts 171 – 180, 49 CFR Part 218, DOT safety regulations, and DTR 4500.9-R-Parts II and III. When loading freight cars, refer to Bureau of Explosives Pamphlets 6 and 6A and 49 CFR Part 174 for guidance unless specific instructions or car loading drawings are available for the items involved. Refer to Bureau of Explosives Pamphlet 6C for guidance in securing truck bodies or trailers on flat cars; and for loading, blocking, and bracing of the cargo within, or on, such vehicles or containers. Obtain Bureau of Explosives pamphlets by writing: Bureau of Explosives, Transportation Technology Center, Inc., 55500 DOT Road, Pueblo, CO 81001 or http://www.boe.aar.com/index.html.

V1.E6.42.36.1. **(Added)(AF)** Locomotives. Carry portable fire extinguishers on all locomotives and other self-propelled rail vehicles IAW paragraph **V1.E10.6.15.2.**

V1.E6.42.36.2. **(Added)(AF)** Control vegetation along the railroad right-of-way on the base per paragraph **V1.E10.6.8.**

V1.E6.42.37. (Added)(AF) Tools for Loading and Unloading Railcars. Steel tools, used with reasonable care, may be used inside cars if explosives are not exposed. When explosives are exposed, take special care to prevent sparks.

V1.E6.42.38. (Added)(AF) Rail Interchange Yards. Use this location for the exchange of railcars between the common carrier and the base activity involved. Interchange yards do not require explosives siting if they are limited to the activities described in section **V4.E5.5.** Apply QD criteria per this manual if the interchange yard is also used as explosives storage or suspect vehicle holding area. The interchange yard may be used as an inspection station. Remove railcars promptly.

V1.E6.42.39. (Added)(AF) Rail Holding Yards. If explosives-loaded railcars cannot be dispatched to unloading points promptly, move the railcars to a holding yard. See section **V4.E5.8.** for holding yard siting requirements. Holding yards may be used for interchange and inspection activities.

V1.E6.42.40. (Added)(AF) Rail Classification Yards. Where the volume of rail traffic necessitates, establish a classification yard primarily for receiving, classifying, switching, and dispatching explosives-laden railcars. Classification yards do not require explosives siting if they are limited to the activities described in section **V4.E5.3.** Apply QD criteria per this manual if the classification yard is also used as explosives storage or suspect vehicle holding area. The classification yard may be used as an interchange yard. Remove railcars promptly.

V1.E6.42.41. (Added)(AF) Transportation of Explosives by Air. Air transportation of explosives by commercial aircraft is regulated by 49 CFR Parts 171 – 180, DOT safety regulations, and DTR 4500.9-R-Parts II and III. Instructions about explosives-laden military aircraft (and certain DoD contract airlift operations) are in AFJI 11-204, AFMAN 24-204, applicable aircraft TOs, and other parts of this manual. Transportation of impulse cartridges (HD 1.4 only) in aircraft travel pods or bomber aircraft equipment bays is permitted if these cartridges are packed correctly in the original DOT shipping containers. Govern this procedure by locally approved operating instructions IAW section **V1.E6.12.** More hazardous explosives (such as aircraft flares) are not authorized by this manual for this type of carriage. See guidance in paragraph **V1.E6.42.1.** for using NEWQD during transportation.

V1.E6.42.42. (Added)(AF) Transportation of Explosives by Water. Transportation of explosives and other hazardous materials by water in vessels engaged in commercial service is regulated by the United States Coast Guard. Shipments overseas must be made according to the regulations of the carrier, the United States Coast Guard, 49 CFR Parts 171 – 180, DTR 4500.9-R-Parts II and III, or the Department of the Army. **(T-0).**

VOLUME 1 – ENCLOSURE 7: QD, DETERMINING NEWQD, AND QD PRINCIPLES, MEASUREMENTS, AND CALCULATIONS

V1.E7.1. GENERAL. The damage or injury potential of explosions is normally determined by the separation distance between a PES and an ES, the ability of the PES to suppress blast overpressure and primary and secondary fragments, and the ability of the ES to resist explosion effects.

V1.E7.1.1. These standards:

V1.E7.1.1.1. Define permissible exposures for both accidental and intentional detonations.

V1.E7.1.1.2. Set minimum criteria for separation distances between PESs and ESs by taking into account anticipated explosion effects, suppression, and resistance.

V1.E7.1.1.3. Establish explosives safety siting criteria (QD relationships) for PESs and ESs based on blast, fragment, firebrand, thermal, and ground shock effects. QD is determined by the effect requiring the greatest distance.

V1.E7.1.2. If the QD requirements of these standards cannot be met, risk-based siting may be used in accordance with conditions and criteria in **Volume 6 – Enclosure 5**.

V1.E7.1.3. **(Added)(AF)** When an appropriate degree of protection can be provided either by hardening an ES or construction of a PES to suppress explosion effects, these factors may be taken into account and the distance required by the standard QD tables may be reduced. Submit construction designs with rationale or test results with the ESP. **(T-1).** See **Volume 2 – Enclosure 5**.

V1.E7.1.4. **(Added)(AF)** QD separation does not apply to AE in the transportation mode (see section **V1.E6.42.**).

V1.E7.2. DETERMINING THE QUANTITY OF EXPLOSIVES

V1.E7.2.1. General. The NEWQD in an AE facility is calculated as shown in paragraphs **V1.E7.2.2.** and **V1.E7.2.3.** If DDESB-approved buffer configurations are provided, the NEWQD is the explosives weight of the largest stack plus the explosives weight of the buffer material, excluding the NEW of HD 1.4. Where the DDESB has approved an HE equivalence for a propellant or pyrotechnic, then this HE equivalence may be used in determining NEWQD. The JHCS provides explosives weights for all DoD hazard classified AE.

V1.E7.2.2. Determining the NEWQD for a Single HD

V1.E7.2.2.1. Mass-explosion (HD 1.1). The NEWQD is the total high explosive weight (HEW) and the total net propellant weight (NPW). For HD 1.1, NEWQD equals the NEW.

V1.E7.2.2.1. **(Added)(AF)** Determine the QD using Table **V3.E3.T17.** and section **V3.E3.1.**

V1.E7.2.2.2. Non-mass Explosion, Fragment Producing (HD 1.2)

V1.E7.2.2.2.1. HD 1.2.1. The NEWQD is the HEW plus the NPW in all HD 1.2.1 items. In certain situations, the MCE, as outlined in paragraph **V3.E3.2.6.**, must be used as the basis for determining applicable QD.

V1.E7.2.2.2.2. HD 1.2.2. The NEWQD is the HEW plus the NPW in all HD 1.2.2 items.

V1.E7.2.2.2.3. HD 1.2.3. The NEWQD is the HEW plus the NPW in all HD 1.2.3 items. This material is treated as HD 1.3; however, a minimum IBD will apply, as outlined in paragraph **V3.E3.2.13.**

V1.E7.2.2.2.4. **(Added)(AF)** Determine the QD using Table **V3.E3.T18.** and section **V3.E3.2.**

V1.E7.2.2.3. Mass Fire, Minor Blast, or Fragment (HD 1.3). The NEWQD is the HEW plus the NPW plus the total weight of pyrotechnics in all HD 1.3 items.

V1.E7.2.2.3. **(Added)(AF)** Determine the QD using Table **V3.E3.T19.** and section **V3.E3.3.**

V1.E7.2.2.4. Moderate Fire, No Blast, or Fragment (HD 1.4). The NEWQD is the HEW plus the NPW plus the total weight of pyrotechnics in all HD 1.4 items.

V1.E7.2.2.4. **(Added)(AF)** Determine the QD using Table **V3.E3.T19.** and section **V3.E3.4.**

V1.E7.2.2.5. Explosive Substance, Very Insensitive (with Mass Explosion Hazard) (HD 1.5). The NEWQD is the HEW plus the NPW in all HD 1.5 items. For HD 1.5, NEWQD equals the NEW.

V1.E7.2.2.5. **(Added)(AF)** Treat as HD 1.1 for siting purposes and comply with paragraph **V1.E7.2.2.1. (T-1).**

V1.E7.2.2.6. Explosive Article, Extremely Insensitive (HD 1.6). The NEWQD is the total weight of EIDSs in all HD 1.6 items. However, the weight of EIDSs in a single HD 1.6 item must also be considered, as specified in Table **V3.E3.T15.**, for determining QD.

V1.E7.2.2.6. **(Added)(AF)** Determine the QD using Table **V3.E3.T19.** and section **V3.E3.5.**

V1.E7.2.2.7. Exclusions. Munitions' fillers that do not contribute to explosive effects (e.g., colored and HC smoke, dyes, irritants, WP, PWP, and TPA) are excluded when determining NEWQD.

V1.E7.2.2.8. **(Added)(AF)** When all AE in the PES is HD 6.1, determine the QD using section **V3.E3.6.**

V1.E7.2.2.9. **(Added)(AF)** When all AE in the PES are energetic liquids, determine the QD using **Volume 5 – Enclosure 4**.

V1.E7.2.2.10. **(Added)(AF)** When siting more than one type of AE, determine separately the QD criteria as required for each type of AE per section **V1.E7.2.** Base required QD separations on the most restrictive QD determined.

V1.E7.2.2.11. **(Added)(AF)** TO 11N-20-7, Nuclear Safety Criteria, provides active materials storage standards for nuclear weapons and when more restrictive, those requirements override QD criteria in this manual. Upon receipt of a joint test assembly, organizations will use parent war reserve weapon explosives criteria for storage and transportation while the assembly remains in Air Force custody.

V1.E7.2.2.12. **(Added)(AF)** If unable to verify QD criteria for a specific weapon system or a given situation, contact the appropriate MAJCOM for instructions. Such cases may include unusual circumstances, configurations, protection or hazards. Storage and handling of some ammunition items are MAJCOM unique and do not fit into any criteria contained in this manual. In such cases, request guidance in writing through command channels to AFSEC/SEW, describing the specific situation, explaining the ammunition item and how it will be stored and handled. The AFSEC/SEW letter of approval may be incorporated into the MAJCOM supplement to this manual.

V1.E7.2.3. Determining the NEWQD for Mixed HDs

V1.E7.2.3.1. General

V1.E7.2.3.1.1. The presence of HD 1.4 does not affect the NEWQD of mixed HDs. However, for QD determinations, HD 1.4 criteria must be considered.

V1.E7.2.3.1.2. When HD 1.1 is mixed with any other HD, treat the mixture as HD 1.1, except as noted in paragraph **V1.E7.2.3.2.**

V1.E7.2.3.1.3. HD 1.5 is always treated as HD 1.1.

V1.E7.2.3.1.4. When dissimilar HD 1.6 are mixed and have not been tested to ensure non-propagation, the mixed HD 1.6 AE must be individually considered either HD 1.2.1 or HD 1.2.2, based on their individual NEWQD or overriding fragmentation characteristics.

V1.E7.2.3.2. HD 1.1 with HD 1.2 (HD 1.2.1, HD 1.2.2, and HD 1.2.3). Use whichever of these generates the largest QD:

V1.E7.2.3.2.1. Sum the NEWQD for HD 1.1 and NEWQD for HD 1.2 and treat the mixture as HD 1.1.

V1.E7.2.3.2.2. The NEWQD of the mixture is the NEWQD of the HD 1.2 subdivision requiring the largest QD.

V1.E7.2.3.3. HD 1.1 with HD 1.3. Sum the NEWQD for HD 1.1 and the NEWQD for HD 1.3 and treat the mixture as HD 1.1.

V1.E7.2.3.3. **(Added)(AF)** AFSEC/SEW may grant exceptions to this guidance when analyses or test results demonstrate that the HD 1.1 (for liquid propellants) will not cause detonation of the HD 1.3.

V1.E7.2.3.4. HD 1.1 with HD 1.6. Sum the NEWQD for HD 1.1 and the NEWQD for HD 1.6 and treat the mixture as HD 1.1.

V1.E7.2.3.5. HD 1.2.1 with HD 1.2.2. The NEWQD for the mixture is the NEWQD of the subdivision requiring the largest QD.

V1.E7.2.3.6. HD 1.2.1 with HD 1.2.3. The NEWQD for the mixture is the NEWQD of the subdivision requiring the largest QD.

V1.E7.2.3.7. HD 1.2.2 with HD 1.2.3. The NEWQD for the mixture is the NEWQD of the subdivision requiring the largest QD.

V1.E7.2.3.8. HD 1.2.1 with HD 1.2.2 with HD 1.2.3. The NEWQD for the mixture is the NEWQD of the subdivision requiring the largest QD.

V1.E7.2.3.9. HD 1.2 (HD 1.2.1, HD 1.2.2, and HD 1.2.3) with HD 1.3. The NEWQD for the mixture is the NEWQD of the HD requiring the largest QD.

V1.E7.2.3.10. HD 1.2 (HD 1.2.1, HD 1.2.2, and HD 1.2.3) with HD 1.6. Treat the HD 1.6 as HD 1.2.3 and determine NEWQD in accordance with paragraphs **V1.E7.2.3.6.** through **V1.E7.2.3.8.**, as applicable.

V1.E7.2.3.11. HD 1.3 with HD 1.6. Sum the NEWQD for the HD 1.6 and the NEWQD for the HD 1.3 and treat the mixture as HD 1.3.

V1.E7.2.4. **(Added)(AF)** Where explosives are located in a common facility or location and are further subdivided into cells or stacks by IMD or equivalent protection (such as for multicubicals), the cell or stack with the greatest NEWQD may be used for explosives siting if specifically allowed by this manual or approved by AFSEC/SEW. Where IMD or equivalent protection is not provided, use the total NEWQD of all explosives.

V1.E7.2.5. **(Added)(AF)** For HD 1.2.1, use the MCE as outlined in paragraphs **V3.E3.2.1.** and **V3.E3.2.3.1.** as the basis for determining applicable QD.

V1.E7.2.6. **(Added)(AF)** For HD 1.2.3, use the MCE as outlined in paragraph **V1.E5.2.3.3.1.3.5.** as the basis for determining applicable QD.

V1.E7.2.7. **(Added)(AF)** Base the NEWQD of a host-nation PES that may be hazarding Air Force facilities and personnel on the maximum NEWQD the host-nation indicates will ever be present at that PES location. If the NEWQD cannot be obtained from the host-nation, the responsible safety staff must estimate the type and quantity of explosives. Base estimates on knowledge of the host-nation's military mission and type of facility involved (such as ECM, aircraft shelter, or maintenance facility). As a general rule, use the maximum NEWQD that would be allowed in a similar Air Force facility.

V1.E7.3. QD PRINCIPLES

V1.E7.3.1. The bases for determining required separation distances (i.e., QD) are:

V1.E7.3.1.1. The HD types and NEWQD of AE present in an AE facility.

V1.E7.3.1.2. The NEWQD of the HD requiring the greatest separation establishes the QD for the facility when the facility is used for multiple operations.

V1.E7.3.1.3. The NEWQD for the HPM is based on its MCE (i.e., the sum of the contents of an individual open cell and the loading dock, rather than the aggregate NEWQD for the entire magazine). The MCE for the HPM must not exceed 60,000 lbs [27,215 kg].

V1.E7.3.2. The bases for subdividing a quantity of AE into smaller units for the purpose of QD reduction are:

V1.E7.3.2.1. Separation by Time. When two or more stacks of equal NEWQD detonate within short time intervals, the blast waves will coalesce. A short time interval is defined as a time in milliseconds (ms) that is less than $4.0W^{1/3}$ [$5.21Q^{1/3}$] of any one stack in lbs [kg] for lateral (side-to-side) target positions and less than $5.6W^{1/3}$ [$7.29Q^{1/3}$] of any one stack in lbs [kg] for axial target positions. (In the preceding formulas, the unit for the constant is $ms/lbs^{1/3}$ [$ms/kg^{1/3}$].) The combined shock wave, after coalescence, will be that of a single detonation of a charge equal to the summation of the several stacks. When coalescence does not occur, the MCE for the stacks is equal to the NEWQD for one stack.

V1.E7.3.2.2. Separation by Barriers. Barriers designed in accordance with the principles of Unified Facilities Criteria 3-340-02 must ensure no propagation between AE stacks. When barriers are constructed in accordance with this guidance or when supported by test data, the MCE is equal to the NEWQD of the AE stack with the largest QD requirement. Otherwise, QD computations must be based upon the summation of NEWQD for all of the AE stacks. Barrier design must include adequate standoff distances and take into account acceptor AE sensitivity.

V1.E7.3.3. The QD criteria for a PES-ES pair, when both contain AE, are determined by considering each location, in turn, as a PES and an ES. The quantity of AE permitted in each PES will be the amount permitted by the distance specified in the appropriate QD tables. The separation distance required for the pair is the greater of the two separation distances. An exception is permitted for service magazines supporting an AE operation; per paragraphs **V3.E3.1.1.1.1.8.**, **V3.E3.1.1.2.1.9.**, and **V3.E3.1.4.** the separation distance in this instance may be based only on the AE in the service magazine.

V1.E7.3.3. **(Added)(AF)** The quantity of explosives allowed in a PES is the most restrictive amount based on analyzing the nearest intermagazine (IM), intraline (IL), public traffic route (PTR), IB or other ES, subject to the NEWQD limitations in the respective volumes and enclosures in this manual. Where there are two or more adjacent ESs, the quantity allowed at the PES is the smallest of the amounts permitted by considering each ES in turn.

V1.E7.3.4. Flight ranges for units (e.g., rockets, missile motors, and cartridge or propellant actuated devices) in a propulsive state must be disregarded because it is impractical to specify QD separations that allow for their designed flight range.

V1.E7.4. QD MEASUREMENTS

V1.E7.4.1. Separation distances are measured along straight lines. For large intervening topographical features such as hills, measure over or around the feature, whichever distance is shorter. For golf courses, measure to the nearest edge of the tee or green or to the centerline of fairways.

V1.E7.4.2. Measurements of distance for determining the maximum allowable quantity of AE must be made to the nearest part of an ES from:

V1.E7.4.2.1. The nearest wall of the PES.

V1.E7.4.2.2. The exterior of the nearest intervening wall to the controlling AE stack, when the PES is subdivided.

V1.E7.4.2.3. **(Added)(AF)** The outside of the nearest wall of the compartment containing the greatest quantity distance hazard, when the PES is subdivided so that mass detonation between compartments will not occur.

V1.E7.4.2.4. **(Added)(AF)** The stack face of an open storage PES, such as modules and revetments.

V1.E7.4.2.5. **(Added)(AF)** The explosives carried externally on an aircraft parked either in the open or inside an approved lightweight shelter.

V1.E7.4.2.6. **(Added)(AF)** The nearest external wall of the shelter or stall containing explosives or explosives-loaded aircraft, in a HAS.

V1.E7.4.2.7. **(Added)(AF)** The center of large missile silos and the outer edge of launchers or launch pad structures.

V1.E7.4.2.8. **(Added)(AF)** The edge of a facility pad if used to hold munitions.

V1.E7.4.2.9. **(Added)(AF)** The nearest edge of the aircraft cargo hold for internally loaded explosives.

V1.E7.4.3. When an AE conveyance (e.g., railroad car or motor vehicle) containing AE is not separated from a PES in such a manner as to prevent mass detonation, then the conveyance and PES must be considered as a unit and their NEWQD summed. The separation distance must be measured from the nearest outside wall of the PES or conveyance, as appropriate, to an ES. If the AE are separated so that mass detonation will not occur, the separation distance must be measured from the nearest controlling PES or conveyance to an ES.

V1.E7.4.3. **(Added)(AF)** This does not apply to temporary staging for the purpose of loading or unloading.

V1.E7.4.4. (Added)(AF) Measuring to an ES. Measure to an ES, from a PES, as follows:

V1.E7.4.4.1. **(Added)(AF)** The nearest edge of a non-explosives location, building, or taxiway.

V1.E7.4.4.2. **(Added)(AF)** The outside of the nearest wall of the structure or room containing people, for an occupied ES.

V1.E7.4.4.3. **(Added)(AF)** The stack face of an open storage PES, acting as an ES.

V1.E7.4.4.4. **(Added)(AF)** The outside of the nearest wall of the structure or room containing explosives, for an ES requiring IMD.

V1.E7.4.4.5. **(Added)(AF)** The centerline of a runway.

V1.E7.4.4.6. **(Added)(AF)** The nearest edge of an open recreational area.

V1.E7.4.4.7. **(Added)(AF)** The nearest edge of the aircraft cargo hold for internally-loaded explosives.

V1.E7.4.4.8. **(Added)(AF)** The edge of the roadway or pavement, for an ES requiring PTRD.

V1.E7.4.4.9. **(Added)(AF)** The nearest point of an aircraft, if aircraft survivability is required.

V1.E7.4.4.10. **(Added)(AF)** The nearest AE (internal or external) on an aircraft, if only IMD or ILD protection is required.

V1.E7.5. QD CALCULATIONS

V1.E7.5.1. QD K-factors. Throughout this manual, NEW is used to calculate QD by means of a formula of the type D (ft) = $K \bullet W^{1/3}$, where "D" is the distance in feet, "K" is a factor (also called K-factor) that is dependent upon the risk assumed or permitted, and "W" is the NEW or NEWQD in pounds. When metric units are used, the symbol "Q" denotes NEQ in kilograms. In the formula D (m) = $K_m \bullet Q^{1/3}$, the distance "D" is expressed in meters.

V1.E7.5.1.1. The units of the K-factor are $ft/lb^{1/3}$ ("K" in the English system) and $m/kg^{1/3}$ ("K_m" in the metric system).

V1.E7.5.1.2. The value of "K" in English units is approximately 2.52 times "K_m." For example, if D (m) = $6 \bullet Q^{1/3}$, then D (ft) = $15.12 \bullet W^{1/3}$.

V1.E7.5.1.3. Distance requirements determined by the formula with English units are sometimes expressed by the value of "K," using the terminology K9, K11, K18, to mean K = 9, K = 11, and K = 18.

V1.E7.5.1.4. **(Added)(AF)** Tables **V3.E3.T7.** and **V3.E3.T8.** provide a listing of distances for various K-factors at various NEWQDs.

V1.E7.5.2. Rounding. When performing QD calculations using formulas, resulting answers with a decimal value of 0.5 or more may be rounded up to the nearest whole number, and resulting answers with a decimal value of less than 0.5 may be rounded down to the nearest whole number. See Figure **V1.E7.F1.** for examples.

Figure V1.E7.F1. Examples of Rounding QD Calculations

If calculating the required distance:

$D = K(NEWQD)^{1/3} = 40(1{,}500 \text{ lbs})^{1/3} = 457.89 \text{ ft} = 458 \text{ ft}$

$D = K(NEWQD)^{1/3} = 18(200 \text{ lbs})^{1/3} = 105.26 \text{ ft} = 105 \text{ ft}$

If calculating the allowable NEWQD:

$NEWQD = (D/K)^3 = (1{,}150 \text{ ft}/40)^3 = 23{,}763.67 \text{ lbs} = 23{,}764 \text{ lbs}$

$NEWQD = (D/K)^3 = (700 \text{ ft}/18)^3 = 58{,}813.44 \text{ lbs} = 58{,}813 \text{ lbs}$

VOLUME 1 – ENCLOSURE 8: REACTION EFFECTS

V1.E8.1. INTRODUCTION. This enclosure describes the expected effects of AE reactions.

V1.E8.2. HD 1.1 EFFECTS

V1.E8.2.1. Blast

V1.E8.2.1.1. Blast Wave Phenomena. In an incident involving HD 1.1 or HD 1.1 with any other HD (known as an HD 1.1 event), the violent release of energy creates a sudden and intense pressure disturbance termed the "blast wave." The blast wave is characterized by an almost instantaneous rise from ambient pressure to a peak incident pressure. This pressure increase, or "shock front," travels radially outward from the detonation point, with a diminishing velocity that is always in excess of the speed of sound in that medium. Gas molecules making up the front move at lower velocities. This velocity, which is called the "particle velocity," is associated with the "dynamic pressure," or the pressure formed by the winds produced by the shock front.

V1.E8.2.1.1.1. As the shock front expands into increasingly larger volumes of the medium, the incident pressure decreases and the duration of the pressure-pulse generally increases.

V1.E8.2.1.1.2. If the shock wave impinges a rigid surface (e.g., a building) at an angle to the direction of the wave's propagation, a reflected pressure is instantly developed on the surface and this pressure rises to a value that exceeds the incident pressure. This reflected pressure is a function of the incident wave's pressure and the angle formed between the rigid surface and the plane of the shock front.

V1.E8.2.1.2. Partially Confined Explosions. When an explosion occurs within a structure, the peak pressure associated with the initial shock front will be both high and amplified by reflections within the structure. In addition, the accumulation of gases from the explosion will exert additional pressure on the structure and increase the load duration within the structure. This effect may damage or destroy the structure unless the structure is designed to either withstand or vent the gas and shock pressures. Structures that have one or more strengthened walls may be vented for relief of excessive gas by using frangible construction for the remaining walls or roof or using openings such as windows or vents. This type of construction will allow the gas from an internal explosion to spill out of the structure. Once released from confinement, these pressures, referred to as "exterior" or "leakage" pressures, expand radially and may affect external structures or personnel.

V1.E8.2.1.3. Expected Blast Pressures at QD. Table **V1.E8.T2.** presents the incident pressures expected at various K-factors from HD 1.1 events.

Table V1.E8.T2. Expected Peak Incident Pressures from HD 1.1 Events

Location	K-Factor (ft/lb$^{1/3}$)	Incident Pressure (psi)
	K_m-Factor [m/kg$^{1/3}$]	*Incident Pressure [kPa]*
Barricaded Aboveground IMD	6	27
	2.38	*186.2*
Barricaded ILD	9	12
	3.57	*82.7*
Unbarricaded Aboveground IMD	11	8
	4.36	*55.2*
Unbarricaded ILD	18	3.5
	7.14	*24.1*
Public Traffic Route Distance (PTRD)		
W < 100,000 lbs	24	2.3
Q < 45,400 kg	*9.52*	*15.9*
W > 250,000 lbs	30	1.7
Q > 113,400 kg	*11.9*	*11.7*
IBD		
W < 100,000 lbs	40	1.2
Q < 45,400 kg	*15.87*	*8.3*
W > 250,000 lbs	50	0.9
Q > 113,400 kg	*19.84*	*6.2*

V1.E8.2.1.4. General Blast Effects on Structures

V1.E8.2.1.4.1. Conventional Structures. Conventional structures generally are designed to withstand roof-snow loads of 0-50 pounds per square foot (lbs/ft^2) [0-2.4 kPa] or wind loads up to 90 miles per hour [145 kilometers per hour], or both. At 90 miles per hour [145 kilometers per hour], the wind load equates to 0.14 psi [1.0 kPa]. Given the pressures shown in Table **V1.E8.T2.** for the selected K-factors, it is evident that, even at IBD, conventional structures may not provide complete protection from the blast. Generally, the weakest portions of any conventional structure are the windows. Table **V1.E8.T3.** provides the probability of breaking typical windows at various K-factors and associated incident pressures from HD 1.1 events.

Table V1.E8.T3. Probability of Window Breakage from Incident Pressure

K-Factor (ft/lb$^{1/3}$)	Incident Pressure (psi)	Probability of Breakage (%) for Windows Facing PES		
K_m-Factor [m/kg$^{1/3}$]	*Incident Pressure [kPa]*	Window 1[a]	Window 2[b]	Window 3[c]
40 *15.87*	1.2 *8.3*	85	100	100
50 *19.84*	0.9 *6.2*	60	100	100
60 *23.80*	0.7 *4.8*	41	100	100
70 *27.77*	0.6 *4.1*	26	100	100
80 *31.74*	0.5 *3.4*	16	94	100
90 *35.70*	0.4 *2.8*	10	76	100
100 *39.67*	0.3 *2.1*	6	55	100
150 *59.51*	0.2 *1.4*	1	8	49
328 *130.12*	0.0655 *0.45*	0	0.1	0.8

a	12-inch x 24-inch x 0.088-inch float annealed (area = 2 ft^2) *30.5-centimeters (cm) x 61-cm x 0.223-cm float annealed (area = 0.186 square meters (m^2))*
b	24-inch x 24-inch x 0.088-inch float annealed (area = 4 ft^2) *61-cm x 61-cm x 0.223-cm float annealed (area = 0.372 m^2)*
c	42-inch x 36-inch x 0.12-inch float annealed (area = 10.5 ft^2) *106.7-cm x 91.4-cm x 0.305-cm float annealed (area = 0.975 m^2)*

V1.E8.2.1.4.2. Aboveground Structures (AGSs). These generally are considered conventional structures and provide little protection from blast or fragmentation, as described in paragraph **V1.E8.2.5.**

V1.E8.2.1.4.3. Earth-Covered Magazines (ECMs). High reflected pressure and impulse produced by an explosion at an adjacent ECM can damage doors and headwalls and propel debris into an ECM so that explosion is communicated by impact of such debris upon the contents. When separated from each other by the minimum distances required by Table **V3.E3.T6.**, ECMs (as addressed in section **V2.E5.5.**) provide virtually complete protection of AE against the propagation effects of an explosion. However, AE in adjacent ECMs may be damaged and structural damage ranging from cracks in concrete to damage to ventilators and doors to complete structural failure may occur. When ECMs containing HD 1.1 AE are sited so that any one is in the forward sector of another, the two must be separated by distances greater than the minimum permitted for side-to-side orientations. The greater distances are required

primarily for the protection of door and headwall structures against blast from a PES forward of the exposed magazine, and to a lesser extent due to the directionality of effects from the source.

V1.E8.2.1.4.4. Underground Storage Facilities. Underground facilities sited in accordance with **Volume 5 – Enclosure 5** provide a high degree of protection against propagation of an explosion between chambers, and between underground and aboveground structures. An HD 1.1 explosion in an underground storage facility causes very high pressures of prolonged duration. Blast waves and the accompanying gas flows will travel throughout the underground facility at high velocity.

V1.E8.2.1.4.5. Barricaded Open Storage Modules. Barricaded open storage modules, as addressed in section **V2.E5.6.**, provide a high degree of protection against propagation of explosion. However, if flammable materials are present in nearby cells, subsequent propagation of explosion by fire is possible. When an explosion occurs, AE in adjacent modules separated by K1.1 [K_m 0.44] will be thrown tens of meters, covered with earth, and unavailable for use until extensive uncovering operations, and possibly maintenance, are completed. Items at K2.52 [K_m 1.0] separation distance from a donor explosion are expected to be readily accessible.

V1.E8.2.1.4.6. HPMs. When separated from other AE storage magazines by the minimum distances required by Table **V3.E3.T6.**, the HPM provides virtually complete protection of AE against the propagation effects of an explosion. The HPM's 2-story transfer and storage areas are enclosed by a pre-engineered metal building, which may be severely damaged as a result of an explosion at a nearby PES. The amount of damage to be expected at various pressure levels is described in paragraph **V1.E8.2.5.** Access to the AE in an HPM may require extensive cleanup and the use of a mobile crane, unless special design considerations are incorporated into the metal building design. The HPM contains multiple storage cells, which are designed to limit the MCE, as discussed in paragraph **V1.E7.3.1.3.** In the event of an internal explosion involving the MCE, the pre-engineered metal building can be expected to be completely destroyed, and AE not involved in the explosion can be expected to be significantly damaged and no longer usable.

V1.E8.2.1.5. General Blast Effects on Personnel. Tables **V1.E8.T4.** through **V1.E8.T6.** describe the expected effects of blast on personnel.

V1.E8.2.1.6. Computation of Blast Effects. Many of the blast effects described in paragraphs **V1.E8.2.1.1.** through **V1.E8.2.1.5.** were computed with the DDESB Blast Effects Computer (DDESB Technical Paper 17, which can be used to estimate similar effects associated with various NEWs, facilities, and distances.

Table V1.E8.T4. General Blast Effects on Personnel – Eardrum Rupture

Effect	Incident Pressure (psi) *[kPa]*	K-Factor (ft/lb$^{1/3}$) *[m/kg$^{1/3}$]*	Probability Minor[a] (%)	Moderate[b] (%)	Major[c] (%)
Eardrum Rupture	3.0 *20.7*	20.0 *7.87*	3.2	0.2	0
	3.6 *24.5*	17.9 *7.08*	7.3	0.7	0
	4.9 *33.8*	14.6 *5.78*	21.0	3.9	0
	6.6 *45.7*	12.2 *4.84*	41.3	12.8	0.2
	9.0 *62.1*	10.3 *4.10*	63.7	29.8	1.5
	15.0 *103.6*	8.0 *3.16*	88.8	65.0	15.1
	74.4 *513.0*	3.9 *1.55*	100	99.8	97.8

a	Minor rupture includes minor slits and linear disruption of the drum fibers, producing a mesh-like effect.
b	Moderate rupture consists of large tears or multiple small holes or tears.
c	Major rupture is total disruption of the drum with large flaps of drum.

Table V1.E8.T5. General Blast Effects on Personnel – Lung Damage

Effect	Incident Pressure (psi) *[kPa]*	Pulse Duration (ms)
Threshold Lung Damage (standing person)	191.0 *1,316.9*	0.2
	87.6 *604.0*	0.5
	50.0 *344.8*	1
	32.5 *224.1*	2
	19.3 *133.1*	5
	14.4 *99.3*	10
	12.1 *83.4*	20
	10.9 *75.2*	50
	10.5 *72.4*	100

Table V1.E8.T6. General Blast Effects on Personnel – Lethality Due to Lung Rupture

Effect[a]	Probability	Weight	Range	K-Factor	Incident Pressure	Pulse Duration	Positive Impulse
	%	(lbs)	(ft)	(ft/lb$^{1/3}$)	(psi)	(ms)	(psi-ms)
		[kg]	*[m]*	*[m/kg$^{1/3}$]*	*[kPa]*		*[Pa-s]*
Lethality Due to Lung Rupture	1	8,000	95.0	4.75	47.2	31.3	317.5
		3,628.7	*29.0*	*1.88*	*325.4*		*2,189.1*
		27,000	155.0	5.19	38.5	47.4	437.9
		12,247.0	*47.2*	*2.06*	*265.4*		*3,019.2*
		125,000	277.6	5.55	33.0	80.9	685.2
		56,699.0	*84.6*	*2.20*	*227.5*		*4,724.2*
	50	8,000	76.1	3.80	79.0	33.0	393.5
		3,628.7	*23.2*	*1.51*	*544.7*		*2,713.1*
		27,000	128.4	4.28	60.1	47.8	526.7
		12,247.0	*39.1*	*1.70*	*414.4*		*3,631.5*
		125,000	234.1	4.68	48.8	78.4	805.1
		56,699.0	*71.4*	*1.86*	*336.5*		*5,551.0*
	99	8,000	57.7	2.89	146.8	32.6	493.4
		3,628.7	*17.6*	*1.15*	*1,012.1*		*3,401.8*
		27,000	103.8	3.46	97.9	50.8	643.2
		12,247.0	*31.6*	*1.37*	*675.0*		*4,434.7*
		125,000	195.8	3.92	73.8	81.8	956.5
		56,699.0	*59.7*	*1.56*	*508.8*		*6,594.8*

a	Lethality due to lung rupture is caused by a combination of pressure and impulse. This combination will vary with the charge weight.

V1.E8.2.2. Fragments. An important consideration in the analysis of the hazards associated with an explosion is the effect of any fragments produced. Although most common in HD 1.1 or HD 1.2 events, fragmentation may occur in any incident involving AE. Depending on their origin, fragments are referred to as "primary" or "secondary" fragments.

V1.E8.2.2.1. Primary fragments result from the shattering of a container (e.g., shell casings, kettles, hoppers, and other containers used in the manufacture of explosives, or rocket engine housings) in direct contact with the explosive. These fragments usually are small, initially travel at thousands of feet per second, and may be lethal at long distances from an explosion.

V1.E8.2.2.2. Secondary fragments are debris from structures and other items in close proximity to the explosion. These fragments, which are somewhat larger in size than primary fragments and initially travel at hundreds of feet per second, do not normally travel as far as primary fragments.

V1.E8.2.2.3. The earth cover of an underground facility may rupture and create a significant debris hazard.

V1.E8.2.2.4. A hazardous fragment is one having an impact energy of 58 ft-lbs [79 joules] or greater.

V1.E8.2.2.5. The hazardous fragment distance (HFD) is the distance at which the areal density of hazardous fragments or debris becomes one per 600 ft^2 [55.7 m^2].

V1.E8.2.3. Thermal Hazards

V1.E8.2.3.1. General. Thermal hazards from an HD 1.1 event are generally of less concern than blast and fragment hazards.

V1.E8.2.3.2. Personnel. It normally takes longer to incur injury from thermal effects than from either blast or fragmentation effects because both blast and fragmentation occur almost instantaneously. The time available to react to a thermal event increases survivability.

V1.E8.2.3.3. Structures, Material, and AE. The primary thermal effect on structures, material, and AE is their partial or total destruction by fire. The primary concern with a fire involving AE is that it may transition to a more severe reaction, such as a detonation.

V1.E8.2.4. Ground Shock and Cratering

V1.E8.2.4.1. General

V1.E8.2.4.1.1. In an airburst, there may be a downward propagation of ground shock and cratering may be reduced or eliminated.

V1.E8.2.4.1.2. In a surface burst, ground shock is generated and cratering can be significant.

V1.E8.2.4.1.3. A buried or partially buried detonation produces the strongest ground shock; however, if the explosion is deep enough, no crater will be formed.

V1.E8.2.4.2. Underground Facilities. AE protection can be achieved by proper chamber spacing. An HD 1.1 explosion will produce ground shocks that may rupture the earth cover and eject debris, as addressed in **Volume 5 – Enclosure 5**.

V1.E8.2.5. Expected Consequences

V1.E8.2.5.1. Barricaded Aboveground Magazine (AGM) Distance - $6W^{1/3}$ ft [$2.38Q^{1/3}$ m] - 27 psi [186.1 kPa]

V1.E8.2.5.1.1. Effects at This Distance

V1.E8.2.5.1.1.1. Unstrengthened buildings will be destroyed.

V1.E8.2.5.1.1.2. Personnel will be killed by blast, debris, or impact against hard surfaces.

V1.E8.2.5.1.1.3. Transport vehicles will be overturned and crushed by the blast.

V1.E8.2.5.1.1.4. Explosives-loaded vessels will be damaged severely, with propagation of explosion likely.

V1.E8.2.5.1.1.5. Aircraft will be destroyed by blast, thermal, and debris effects.

V1.E8.2.5.1.2. Control. Barricading is required. Barricades are effective in preventing immediate propagation of explosion by high-velocity, low-angle fragments. However, they provide only limited protection against any delayed propagation of explosives caused by a fire resulting from high-angle firebrands. Exposed structures containing high-value, mission-critical equipment or personnel may require hardening. The presence of barricades does not reduce required PTRD and IBD.

V1.E8.2.5.2. Barricaded ILD - $9W^{1/3}$ ft [$3.57Q^{1/3}$ m] - 12 psi [82.7 kPa]

V1.E8.2.5.2.1. Effects at This Distance

V1.E8.2.5.2.1.1. Unstrengthened buildings will suffer severe structural damage approaching total destruction.

V1.E8.2.5.2.1.2. Personnel will be subject to severe injuries or death from direct blast, building collapse, or translation.

V1.E8.2.5.2.1.3. Aircraft will be damaged beyond economical repair both by blast and fragments. If the aircraft are loaded with explosives, delayed explosions are likely to result from subsequent fires.

V1.E8.2.5.2.1.4. Transport vehicles will be damaged heavily, probably to the extent of total loss.

V1.E8.2.5.2.1.5. Improperly designed barricades or structures may increase the hazard from flying debris, or may collapse in such a manner as to increase the risk to personnel and equipment.

V1.E8.2.5.2.2. Control. Barricading is required. Direct propagation of explosion between two explosive locations is unlikely when barricades are placed between them to intercept high-velocity, low-angle fragments. Barricades are effective in preventing immediate propagation of explosion by high-velocity, low-angle fragments. However, they provide only limited protection against any delayed propagation of explosives caused by a fire resulting from high-angle firebrands. Exposed structures containing high-value, mission-critical equipment or personnel may require hardening. The presence of barricades does not reduce required PTRD and IBD.

V1.E8.2.5.3. Unbarricaded AGM Distance - $11W^{1/3}$ ft [$4.36Q^{1/3}$ m] - 8 psi [55.3 kPa]

V1.E8.2.5.3.1. Effects at This Distance

V1.E8.2.5.3.1.1. Unstrengthened buildings will suffer damage approaching total destruction.

V1.E8.2.5.3.1.2. Personnel are likely to be injured seriously due to blast, fragments, debris, and translation.

V1.E8.2.5.3.1.3. There is a 15-percent risk of eardrum rupture.

V1.E8.2.5.3.1.4. Explosives-loaded vessels are likely to be damaged extensively and delayed propagation of explosion may occur.

V1.E8.2.5.3.1.5. Aircraft will be damaged heavily by blast and fragments; destruction by resulting fire is likely.

V1.E8.2.5.3.1.6. Transport vehicles will sustain severe body damage, minor engine damage, and total glass breakage.

V1.E8.2.5.3.2. Control. Barricading will significantly reduce the risk of propagation of explosion and injury of personnel by high-velocity, low-angle fragments.

V1.E8.2.5.4. Unbarricaded ILD - $18W^{1/3}$ ft [$7.14Q^{1/3}$ m] - 3.5 psi [24 kPa]

V1.E8.2.5.4.1. Effects at This Distance

V1.E8.2.5.4.1.1. Direct propagation of explosion is not expected.

V1.E8.2.5.4.1.2. Delayed propagation of an explosion may occur at the ES, as either a direct result of a fire or as a result of equipment failure.

V1.E8.2.5.4.1.3. Damage to unstrengthened buildings may approximate 50 percent or more of the total replacement cost.

V1.E8.2.5.4.1.4. There is a 2-percent chance of eardrum damage to personnel.

V1.E8.2.5.4.1.5. Personnel may suffer serious injuries from fragments, debris, firebrands, or other objects.

V1.E8.2.5.4.1.6. Fragments could damage the decks and superstructure of cargo ships and overpressure could buckle their doors and bulkheads on weather decks.

V1.E8.2.5.4.1.7. Aircraft can be expected to suffer considerable structural damage from blast. Fragments and debris are likely to cause severe damage to aircraft at distances calculated from the formula $18W^{1/3}$ [$7.2Q^{1/3}$] when small quantities of explosives are involved.

V1.E8.2.5.4.1.8. Transport vehicles will incur extensive, but not severe, body and glass damage consisting mainly of dishing of body panels and cracks in shatter-resistant window glass.

V1.E8.2.5.4.2. Control. Suitably designed suppressive construction at the PES or protective construction at the ES may be practical for some situations. Such construction is encouraged when there is insufficient distance to provide the required protection.

V1.E8.2.5.5. PTRD (under 100,000 lbs of HE) - $24W^{1/3}$ ft [$9.52Q^{1/3}$ m] - 2.3 psi [15.8 kPa]

V1.E8.2.5.5.1. Effects at This Distance

V1.E8.2.5.5.1.1. Unstrengthened buildings can be expected to sustain damage that equates to approximately 20 percent of the replacement cost.

V1.E8.2.5.5.1.2. Occupants of exposed structures may suffer temporary hearing loss or injury from blast effects, building debris, and displacement.

V1.E8.2.5.5.1.3. Although personnel in the open are not expected to be killed or seriously injured by blast effects, fragments and debris may cause some injuries. The extent of these injuries depends largely upon the PES structure and the amount and fragmentation characteristics of the AE involved.

V1.E8.2.5.5.1.4. Vehicles on the road should suffer little damage, unless they are hit by a fragment or the blast causes a momentary loss of control.

V1.E8.2.5.5.1.5. Aircraft may suffer some damage to the fuselage from blast and possible fragment penetration, but should be operational with minor repair.

V1.E8.2.5.5.1.6. Cargo-type ships should suffer minor damage to deck structure and exposed electronics from blast and possible fragment penetration, but such damage should be readily repairable.

V1.E8.2.5.5.2. Control. Barricading can reduce the risk of injury or damage due to fragments for limited quantities of AE at a PES. When practical, suitably designed suppressive construction at the PES or protective construction at the ES may also provide some protection.

V1.E8.2.5.6. PTRD (over 250,000 lbs of HE) - $30W^{1/3}$ ft [$11.9Q^{1/3}$ m] - 1.7 psi [11.7 kPa]

V1.E8.2.5.6.1. Effects at This Distance

V1.E8.2.5.6.1.1. Unstrengthened buildings can be expected to sustain damage that equates to approximately 10 percent of the replacement cost.

V1.E8.2.5.6.1.2. Occupants of exposed, unstrengthened structures may be injured by secondary blast effects, such as falling building debris.

V1.E8.2.5.6.1.3. Pilots of aircraft that are landing or taking off may lose control and crash.

V1.E8.2.5.6.1.4. Parked military and commercial aircraft will likely sustain minor damage due to blast, but should remain airworthy.

V1.E8.2.5.6.1.5. Although personnel in the open are not expected to be killed or seriously injured by blast effects, fragments and debris may cause some injuries. The extent of these injuries will largely depend upon the PES structure, the NEW, and the fragmentation characteristics of the AE involved.

V1.E8.2.5.6.2. Control. Barricading or the application of minimum fragmentation distance requirements may reduce the risk of injury or damage due to fragments for limited quantities of AE at a PES.

V1.E8.2.5.7. IBD - $40W^{1/3}$ ft to $50W^{1/3}$ ft [$15.87Q^{1/3}$ m to $19.8Q^{1/3}$ m] - 1.2 psi to 0.90 psi [8.3 kPa to 6.2 kPa]

V1.E8.2.5.7.1. Effects at This Distance

V1.E8.2.5.7.1.1. Unstrengthened buildings can be expected to sustain damage that equates to approximately five percent of the replacement cost.

V1.E8.2.5.7.1.2. Personnel in buildings are provided a high degree of protection from death or serious injury; however, glass breakage and building debris may still cause some injuries.

V1.E8.2.5.7.1.3. Personnel in the open are not expected to be injured seriously by blast effects. Fragments and debris may cause some injuries. The extent of injuries will depend upon the PES structure and the NEW and fragmentation characteristics of the AE involved.

V1.E8.2.5.7.2. Control. Elimination of glass surfaces is the best control. If glass surfaces are deemed necessary, reducing the use of glass or the size of any glass surfaces and using blast-resistant glass will provide some relief. For new construction, building design characteristics—including consideration of how any required glass surfaces are oriented and the use of blast-resistant glass—can reduce glass breakage and structural damage.

V1.E8.3. HD 1.2 EFFECTS

V1.E8.3.1. Blast

V1.E8.3.1.1. HD 1.2, when not stored with HD 1.1 or HD 1.5, is not expected to mass detonate. In an incident involving HD 1.2, when stored by itself or with HD 1.3, HD 1.4, or HD

1.6 (an HD 1.2 event), AE can be expected to explode sporadically and burn. Fire will propagate through the mass of the AE over time, though some AE may not explode or burn. Blast effects from the incident are limited to the immediate vicinity and are not considered to be a significant hazard.

V1.E8.3.1.2. An HD 1.2 event may occur over a prolonged period of time. Generally, the first reactions are relatively nonviolent and typically begin a few minutes after flames engulf the AE. Later reactions tend to be more violent. Reactions can continue for some time (hours), even after a fire is effectively out. Generally, smaller AE tends to react earlier in an incident than larger AE.

V1.E8.3.1.3. The results of an accidental explosion in an underground facility will depend on the type and quantity of munitions, the type of explosion produced, and the layout of the facility. Hazards created outside the underground facility will likely not be as severe as those produced by HD 1.1 or HD 1.3 material.

V1.E8.3.2. Fragments

V1.E8.3.2.1. The primary hazard from an HD 1.2 event is fragmentation. Fragmentation may include primary fragments from AE casings or secondary fragments from containers and structures. At longer ranges, primary fragments are the major contributors to fragment hazards.

V1.E8.3.2.2. During an HD 1.2 event, fragmentation may damage exposed facilities extensively. However, less fragmentation damage can be expected from a given quantity of HD 1.2 than would be expected from the corresponding quantity of HD 1.1 because not all the HD 1.2 will react.

V1.E8.3.3. Thermal Hazards

V1.E8.3.3.1. An incident involving a quantity of HD 1.2 poses considerably less thermal risk to personnel than an incident involving corresponding quantities of either HD 1.1 or HD 1.3 because an HD 1.2 event's progressive nature allows personnel to evacuate the area immediately.

V1.E8.3.3.2. An HD 1.2 event's progressive nature provides an opportunity for a fire suppression system, if installed, to put out a fire in its early stages.

V1.E8.3.4. Ejected Items. In HD 1.2 events, a reaction may eject (lob) unreacted AE or AE components from the event site. These ejected items subsequently may react.

V1.E8.3.5. Propelled Items. In HD 1.2 events, some AE or AE components may become propulsive and travel well beyond IBD.

V1.E8.3.6. Firebrands. In an incident involving only HD 1.2 or HD 1.2 with HD 1.4, firebrands are considered to be a hazard only in the immediate vicinity of the incident site.

V1.E8.3.7. Expected Consequences

V1.E8.3.7.1. The expected consequences for HD 1.2 AE are similar to those for HD 1.1. The effects of HD 1.2 AE are NEW dependent.

V1.E8.3.7.2. Fragments pose the principal hazard to personnel in the open, to aircraft, and to occupied vehicles.

V1.E8.3.7.3. Airblast, fragment, and thermal hazards to buildings and parked aircraft or vehicles cannot be predicted reliably because the effects will depend on the MCE.

V1.E8.4. HD 1.3 EFFECTS

V1.E8.4.1. Gas Pressures. In an incident involving only HD 1.3 or HD 1.3 with HD 1.4 (an HD 1.3 event):

V1.E8.4.1.1. Where sufficient venting is provided, gas pressures generated by the event are not a significant concern. Examples of sites with sufficient venting include open storage and non-confinement structures where internal pressures do not exceed 1-2 psi [6.9-13.8 kPa].

V1.E8.4.1.2. Insufficient venting may result in substantial internal gas pressures. In such situations, these pressures may blow out vent panels or frangible walls and, in some instances, cause partial or complete structural failure.

V1.E8.4.1.3. Where there is minimal venting and structural containment (extreme confinement), a detonation of the HD 1.3 may occur with effects similar to those of an HD 1.1 explosion. For example, HD 1.3 AE is considered HD 1.1 (mass explosion) for QD purposes when stored in underground chambers.

V1.E8.4.2. Fragments. In an HD 1.3 event, fragments are considerably less hazardous than those produced by HD 1.1 and HD 1.2 events. Internal gas pressures may produce fragments from the bursting of containers or the rupture of containment facilities. In general, such fragments will be large and of low velocity; for exceptions, see paragraph **V1.E8.4.1.3.**

V1.E8.4.3. Thermal Hazards. In an HD 1.3 event, heat flux presents the greatest hazard to personnel and assets. Energetic materials in HD 1.3 articles include fuel components and oxidizers. Burning these materials emits fuel-rich flammable gases, fine particles, or both. This unburned material may ignite when it comes in contact with air and cause a large fireball, which will expand radially from the ignition site and could wrap around obstacles, even those designed to provide line-of-sight protection from HD 1.1 events. Shields and walls can be designed to provide protection from thermal effects, as described in **Enclosure 9** of this volume.

V1.E8.4.3.1. The nominal spherical fireball expected from the rapid burning of HD 1.3 can be calculated by $D_{FIRE} = 10 \times W_{EFF}^{1/3}$, where "$D_{FIRE}$" is the diameter of the fireball (ft) and "W_{EFF}" is the quantity of HD 1.3 involved (lbs), multiplied by a 20-percent safety factor (e.g., "W" of 100 lbs = "W_{EFF}" of 120 lbs) [D_{FIRE} (m) = 3.97 x W_{EFF} (kg) $^{1/3}$].

V1.E8.4.3.2. In addition to the fireball itself, the thermal flux from the fireball can ignite fires out to IMD.

V1.E8.4.4. Propelled Items. In an HD 1.3 event, some AE or AE components may become propulsive and travel well beyond IBD.

V1.E8.4.5. Firebrands. In an HD 1.3 event, a severe fire-spread hazard may result from firebrands projected from the incident site. Firebrands can be expected to be thrown more than 50 ft [15.2 m] from an HD 1.3 event. Firebrands can ignite fires well beyond the distance to which a fireball poses a threat.

V1.E8.4.6. Expected Consequences

V1.E8.4.6.1. Exposed personnel may receive severe burns from fireballs or flash burning in an HD 1.3 event. The hazard distance is dependent on the quantity and burning rate of the HD 1.3 involved.

V1.E8.4.6.2. Radiant heat, sparks, or firebrands may ignite or heat may damage (e.g. searing, buckling) buildings, vehicles, and aircraft.

V1.E8.4.6.3. Personnel in nearby buildings, vehicles, or aircraft may be injured unless evacuated before heat conditions reach hazardous levels.

V1.E8.5. HD 1.4 EFFECTS

V1.E8.5.1. Blast. There is no blast associated with an incident involving only HD 1.4 (an HD 1.4 event).

V1.E8.5.2. Fragmentation. An HD 1.4 event will not produce fragments of appreciable energy (i.e., greater than 14.8 ft-lbs [20 joules]). Fragments from HD 1.4S have energies less than or equal to 5.9 ft-lbs [8 joules].

V1.E8.5.3. Thermal Hazard. AE given this designation are considered to provide only a moderate fire hazard. A fireball or jet of flame may extend 3 ft [1 m] beyond the location of the HD 1.4 event. A burning time of less than 330 seconds (5.5 minutes) for 220 lbs [100 kg] of the HD 1.4 AE is expected.

V1.E8.5.4. Firebrands. No fiery projections are expected beyond 50 ft [15.2 m].

V1.E8.5.5. CG S Items. HD 1.4 AE assigned a CG S designation (see paragraph **V1.E6.2.2.13.**) is the most benign of all AE. In an HD 1.4 event that only involves CG S, the expected blast, thermal, and projection effects will not significantly hinder firefighting or other emergency responses.

V1.E8.5.6. Expected Consequences. There may be minor consequences (projection, fire, smoke, heat, or loud noise) beyond the AE itself.

V1.E8.6. HD 1.5 EFFECTS. HD 1.5 effects are similar to those produced by HD 1.1, without the fragmentation effects.

V1.E8.7. HD 1.6 EFFECTS. HD 1.6 effects are similar to those produced by HD 1.3.

VOLUME 1 – ENCLOSURE 9: PERSONNEL PROTECTION

V1.E9.1. SCOPE AND APPLICATION. This enclosure establishes blast, fragment, and thermal hazards protection principles. It applies to all operations and facilities within an explosives safety QD arc in which personnel are exposed to AE hazards. Unified Facilities Criteria 3-340-02 contains design procedures to protect personnel, facilities, and equipment and prevent propagation of explosions.

V1.E9.2. RISK ASSESSMENT. The responsible DoD Component must perform a risk assessment on new or modified operations and facilities involving AE. Based upon such an assessment, engineering design criteria for facilities and operations must be developed for use in the selection of equipment, shielding, engineering controls (ECs), and protective clothing for personnel.

V1.E9.2.1. The risk assessment must include:

V1.E9.2.1.1. Initiation sensitivity.

V1.E9.2.1.2. Quantity of materials.

V1.E9.2.1.3. Heat output.

V1.E9.2.1.4. Rate of burn.

V1.E9.2.1.5. Potential ignition and initiation sources.

V1.E9.2.1.6. Protection capabilities of shields, various types of clothing, and fire protection systems.

V1.E9.2.1.7. Personnel exposure.

V1.E9.2.2. New or modified facilities located within the IBD arc of any PES, and that include glass panels and contain personnel, must have a glass breakage personnel hazards risk assessment conducted.

V1.E9.2.2. **(Added)(AF)** As described in paragraph **V1.E9.4.9.2.**

V1.E9.2.3. **(Added)(AF)b**Explosives safety criteria in this manual helps commanders make informed decisions on the proper mix of combat readiness and safety. This criteria specifies minimum acceptable standards for explosives safety. Compliance with these criteria still entails a significant risk to personnel, assets and facilities. Risk Management (RM) may be used to further reduce, mitigate, or accept risks (see paragraph **V1.E9.2.5.**).

V1.E9.2.4. **(Added)(AF)** Explosives risk assessments are a subset of the commander's overall RM program. An explosives risk assessment analyzes hazards associated with

transporting, storing, disposing of, handling or firing AE materials. Explosives risk assessments may range from examining the relationship between a PES and an ES to determine what effect one has on the other in the event of an accidental explosion, to ascertaining the worst credible event ramifications of an explosives handling mishap. Although risk assessments are required when explosives safety standards cannot be met, they must also be routinely used in other instances as a commander's management tool (e.g., combat loaded aircraft parked on an open ramp, separated by K11, meet the required QD separation per this manual). **(T-1).** However, commanders must also be advised that in this situation the total destruction of adjacent aircraft is certain and that propagation is likely in the event of an explosion on one of the combat loaded aircraft. **(T-1).** The commander must also be apprised of the probability of such an event happening. **(T-1).**

V1.E9.2.5. (Added)(AF) Risk Management.

V1.E9.2.5.1. **(Added)(AF)** According to AFI 90-802 the following RM principles apply: (1) Accept no unnecessary risk, (2) Make risk decisions at the appropriate level, (3) Integrate RM into operations, activities and planning at all levels, (4) Apply the process cyclically and continuously.

V1.E9.2.5.2. **(Added)(AF)** Refer to Air Force Pamphlet (AFPAM) 90-803 for methods on eliminating or reducing risk to support the five-step process of RM. The RM process may not be used to violate directives or other regulatory guidance; normal waiver or variance procedures must be followed in all cases. For waivers or exemptions to criteria in this manual, refer to **Volume 1 – Enclosure 3**.

V1.E9.2.6. (Added)(AF) System Safety. System safety, governed by Military Standard (MIL-STD)-882E, is the application of engineering and management principles, criteria, and techniques to optimize all aspects of safety within the constraints of operational effectiveness, time, and cost throughout all phases of the system life cycle. Similar to the RM processes, the system safety processes require the remaining risk to be accepted by the appropriate authority.

V1.E9.2.7. (Added)(AF) Professional Assistance for Risk Assessments and System Safety Analyses. Units may require engineering support from civil, structural, electrical, safety, etc. to complete a risk assessment. Contact your MAJCOM/SEW for assistance.

V1.E9.2.8. (Added)(AF) Safety Certification of Munitions Systems. All operational nonnuclear munitions systems used by the Air Force require safety certification as specified in AFI 91-205. **(T-1).**

V1.E9.2.9. (Added)(AF) Risk Assessments for Explosives Equipment. Risk assessments for new or modified explosives equipment are typically accomplished as part of the munitions safety certification process and resultant engineering controls are incorporated into the design. Procedural controls are documented in the item TO or other operating procedures and instructions. For explosives equipment unique to the local environment, perform a risk assessment and document any required procedural controls in a locally written instruction (see section **V1.E6.12.**). **(T-1).**

V1.E9.2.10. (Added)(AF) Risk Assessment for Explosives Operations. Risk assessments for new or modified explosives operations are typically accomplished as part of the safety certification of munitions systems and resultant engineering controls are incorporated into the munitions system, equipment, or facility design. Procedural controls are documented in the item TO or other operating procedures and instructions. For explosives operations unique to the local environment, risk assessments are implemented through the ESP; document any operational limitations in a locally written instruction to ensure safety (see section **V1.E6.12.**). **(T-1).**

V1.E9.2.11. (Added)(AF) Risk Assessments for Explosives Facilities.

V1.E9.2.11.1. **(Added)(AF)** Responsible agencies perform risk assessments when they establish a definitive drawing for proposed new explosives facilities. **(T-1).** No further risk assessments need to be accomplished.

V1.E9.2.11.2. **(Added)(AF)** Design agents are responsible for the risk assessment of new or modified explosives facilities not having a definitive drawing. Design agents must accomplish the risk assessment as part of the design process. **(T-1).**

V1.E9.2.11.3. **(Added)(AF)** When protective construction is required for the new or modified explosives facility (or any exposed facility), commanders will ensure the requirement for risk assessments, systems safety analyses, and engineering analyses as well as the requirements for protective construction design (see section **V2.E5.1.**) are accomplished IAW AFI 32-1023.

V1.E9.2.11.4. **(Added)(AF)** When protective construction is not required for the new or modified explosives facility (or any exposed facility), the ESP satisfies the risk assessment requirement.

V1.E9.2.11.5. **(Added)(AF)** Risk assessments for modifications to explosives facilities assess whether the modification will cause additional hazards or reduce the effectiveness of built-in safety features of the facility.

V1.E9.2.11.6. **(Added)(AF)** All occupied facilities with windows within IBD will be evaluated for glass hazards. **(T-1).**

V1.E9.2.12. (Added)(AF) Purpose of Glass Breakage Risk Assessments.

V1.E9.2.12.1. **(Added)(AF)** In the event of an explosives mishap, glass can present a significant hazard to personnel in exposed facilities out to distances well beyond the IBD arc.

V1.E9.2.12.2. **(Added)(AF)** Glass breakage risk assessments determine the extent of this hazard and identify potential mitigation techniques to reduce the hazard to an acceptable level. If the hazard cannot be reduced to an acceptable level, the glass breakage risk assessment can be used to ensure the approving authority makes an informed risk acceptance decision.

V1.E9.2.13. (Added)(AF) Requirements for Performance of Glass Breakage Risk Assessments.

V1.E9.2.13.1. **(Added)(AF)** Glass breakage risk assessments, performed IAW paragraph **V1.E9.2.14.**, are required as follows:

V1.E9.2.13.1.1. **(Added)(AF)** For modified operations in an existing occupied facility (when acting as an exposure) within an IBD arc. If the risk assessment reveals a hazard to personnel, use engineering mitigation actions, if feasible, to eliminate the hazard or reduce it to an acceptable level. Remaining risk must be accepted by the responsible Commander (see section **V1.E9.4.**). **(T-1).**

V1.E9.2.13.1.2. **(Added)(AF)** For existing occupied facilities (when acting as an exposure) within the proposed IBD arc of a new PES. If the risk assessment shows there is a hazard to personnel, use engineering mitigation actions, if feasible, to eliminate the hazard or reduce it to an acceptable level. Remaining risk must be accepted by the responsible commander (see section **V1.E9.4.**). **(T-1).**

V1.E9.2.13.1.3. **(Added)(AF)** For existing occupied facilities (when acting as an exposure) within the IBD arc of an existing PES where modified operations increase the explosive hazard of the PES. If the risk assessment shows there is a hazard to personnel, use engineering mitigation actions, if feasible, to eliminate or reduce the hazard to an acceptable level. Remaining risk must be accepted by the responsible commander (see section **V1.E9.4.**). **(T-1).**

V1.E9.2.13.1.4. **(Added)(AF)** For new occupied facilities located within the IBD arc of any existing PES.

V1.E9.2.13.2. **(Added)(AF)** Glass breakage risk assessments are recommended in the following situations:

V1.E9.2.13.2.1. **(Added)(AF)** As a baseline assessment for all existing occupied buildings within an existing IBD arc.

V1.E9.2.13.2.2. **(Added)(AF)** As a baseline assessment for all existing occupied buildings of a sensitive nature (e.g., schools, off-installation buildings, on-installation buildings with significant public access such as a commissary, buildings with large amounts of glass panels, etc.) inside or near IBD arcs.

V1.E9.2.14. (Added)(AF) Methodology for Glass Breakage Risk Assessments.

V1.E9.2.14.1. **(Added)(AF)** The tool(s) selected for performing a glass breakage risk assessments are based on the intent of the analysis. If the intent is to demonstrate windows will not break due to design, placement, or treatment, then a detailed software based assessment is required. If, however, the intent is to only demonstrate a hazard exists and injuries are possible, the information found in **Volume 1 – Enclosure 8** of this manual may be sufficient for obtaining information to support responsible commanders risk acceptance.

V1.E9.2.14.2. **(Added)(AF)** Glass breakage risk assessments identify the risk to personnel from glass breakage and, if necessary, evaluate the effect of engineering mitigation

actions to reduce the risk to an acceptable level. Protection level "Medium" as defined in Unified Facilities Criteria (UFC) 4-010-01 is considered acceptable levels of protection (see section **V1.E9.4.**).

V1.E9.2.14.3. **(Added)(AF)** Glass breakage risk assessments must:

V1.E9.2.14.3.1. **(Added)(AF)** Consider the presence and distance of personnel from glass panels. **(T-1).**

V1.E9.2.14.3.2. **(Added)(AF)** Evaluate the worst case event likely to expose glass panels to blast hazards. **(T-1).** Glass panels that are exposed to multiple explosives facilities would necessitate evaluation only for the explosives facility that would place the maximum blast loading on the glass panels. Blast loading from HD 1.2.1 AE is based on the MCE. Blast loading from HD 1.2.3 AE will be based on the NEWQD of the largest single round.

V1.E9.2.14.3.3. **(Added)(AF)** Show the anticipated blast loading (i.e., the facility producing the blast loading, the actual separation distance, what HD and NEWQD produces the blast loading, and what the glass panel parameters (type, size, pane thickness) are). **(T-1).**

V1.E9.3. PERMISSIBLE EXPOSURES

V1.E9.3.1. Accidental Ignition or Initiation of Explosives

V1.E9.3.1.1. When a risk assessment indicates that there is an unacceptable risk from an accidental explosion or a flash fire, personnel must be provided protection from blast, fragments, and thermal effects, to include respiratory and circulatory hazards.

V1.E9.3.1.2. When required, personnel protection must limit incident blast overpressure to 2.3 psi [15.9 kPa], fragments to energies of less than 58 ft-lbs [79 joules], and thermal fluxes to prevent the onset of second-degree burns. To prevent the onset of second-degree burns, heat fluxes and exposure times experienced by personnel should be less than that given by the equation $t = 200q^{-1.46}$ where "t" is the time in seconds that a person is exposed and "q" is the received heat flux in kilowatts (kW) per m^2.

V1.E9.3.1.3. K24 [K_m9.52] distance provides the required level of protection for blast and thermal effects only.

V1.E9.3.1.4. Shields that comply with Military Standard MIL-STD-398A provide acceptable protection for blast, thermal, and fragment effects.

V1.E9.3.1.5. **(Added)(AF)** Protective Shielding and Remotely Controlled Operations.

V1.E9.3.1.5.1. **(Added)(AF)** Equipment specialists will perform a risk assessment to determine if an operation requires protective shielding and must be remotely controlled for personnel protection. **(T-1).** Specify shielding and remote control requirements in the item TO. **(T-1).** As a minimum, personnel must use protective shielding when test procedures cannot

ensure explosives are totally isolated and protected from potentially harmful environments such as electrical current or heat. **(T-1).** Operations such as continuity checks of electrically actuated explosives devices, propellant cutting, explosives component assembly, modification, or disassembly and demilitarization may require shielding or be accomplished from a remote controlled location.

V1.E9.3.1.5.2. **(Added)(AF)** The use of protective shielding or remotely controlled operations must be approved as part of the ESP. **(T-1).** (see paragraph **V1.E5.2.3.3.2.8.3.**)

V1.E9.3.1.5.3. **(Added)(AF)** The TO managing agency must ensure safe design and testing of specific protective devices when required by a TO. Test for a 25 percent overload and obtain approval from the NNMSB. **(T-1).**

V1.E9.3.1.5.4. **(Added)(AF)** When a using command establishes a requirement for protective devices, that command must ensure that these devices are of a safe design. Test for a 25 percent overload. **(T-1).**

V1.E9.3.2. Intentional Ignition or Initiation of AE. At operations (e.g., function, proof, lot acceptance testing) where intentional ignition or initiation of AE are conducted and where shielding is required, as determined on a case-by-case basis by the DoD Component concerned, personnel protection must:

V1.E9.3.2.1. Meet the requirements of paragraph **V1.E9.3.1.2.**

V1.E9.3.2.2. Limit overpressure levels in personnel-occupied areas to satisfy MIL-STD-1474E.

V1.E9.3.2.3. Contain or defeat all fragments.

V1.E9.3.2.4. Limit thermal flux and exposure time to prevent the onset of second-degree burns. To prevent the onset of second-degree burns, heat fluxes and exposure times experienced by personnel should be less than that given by the equation $t = 200q^{-1.46}$ where "t" is the time in seconds that a person is exposed and "q" is the received heat flux in kW/m^2. Shields that comply with MIL-STD-398A provide acceptable protection.

V1.E9.3.2.5. **(Added)(AF)** Comply with testing requirements of paragraph **V1.E9.3.1.5.3.** or **V1.E9.3.1.5.4. (T-1).**

V1.E9.3.2.6. **(Added)(AF)** The use of protective shielding must be approved as part of the ESP (see paragraph **V1.E5.2.3.3.2.8.3.**). **(T-1).** This applies to intentional detonations for protection of essential personnel provided the QD requirements of paragraph **V1.E5.2.3.3.2.8.3.** are met.

V1.E9.3.2.7. **(Added)(AF)** Areas used for intentional detonations meet the requirements of paragraphs **V1.E9.3.2.1.** through **V1.E9.3.2.6.** for protection of essential personnel provided the QD requirements of paragraph **V1.E5.2.3.3.2.8.3.** are met.

V1.E9.3.2.8. **(Added)(AF)** EOD proficiency training ranges will meet the requirements of paragraphs **V1.E9.3.2.1.** and **V1.E9.3.2.6.** for protection of essential personnel provided the QD requirements of paragraph **V5.E3.2.11.3.** are met.

V1.E9.3.2.9. **(Added)(AF)** Static test firing of propellant-loaded items must meet the requirements of paragraph **V1.E9.3.1.2.** for protection of operating personnel. **(T-1).**

V1.E9.4. PROTECTIVE MEASURES. Personnel protection may be achieved by:

V1.E9.4.1. Eliminating or establishing positive control of ignition and initiation stimuli.

V1.E9.4.2. Using sufficient distance or barricades to protect from blast or fragments.

V1.E9.4.3. Using fire detection and extinguishing systems (e.g., infrared actuated deluge systems) in those areas where exposed, thermally energetic materials that have a high probability of ignition and a large thermal output are handled. Such systems must maximize the speed of detection, have adequate capacity to extinguish potential flash fires in their incipient state, and maximize the speed of the application of the extinguishing agent.

V1.E9.4.4. Using thermal shielding between the thermal source and personnel in AE operational areas, where it is essential for personnel to be present and the risk assessment indicates that an in-process thermal hazard exists. Any shielding used must comply with MIL-STD-398A. When shielding is either not possible or inadequate, to include a failure to protect exposed personnel's respiratory and circulatory systems, augmentation with improved facility engineering design and personnel protective clothing and equipment may be necessary.

V1.E9.4.5. Using thermal protective clothing that is capable of limiting bodily injury to prevent second-degree burns with personnel taking turning-evasive action, when the maximum quantity of combustible material used in the operation is ignited. To prevent the second-degree burns, heat fluxes and exposure times experienced by personnel should be less than that given by the equation $t = 200q^{-1.46}$ where "t" is the time in seconds that a person is exposed and "q" is the received heat flux in kW/m^2.

V1.E9.4.6. Using protective clothing capable of providing respiratory protection from the inhalation of hot vapors or any toxicological effects, when the risk assessment indicates that inhaling combustion products would result in adverse effects.

V1.E9.4.7. Minimizing the number and size of glass panels in an ES and, if possible, orienting the ES to minimize blast loads on glass panels, when a risk assessment as described in section **V1.E9.2.** indicates that a glass hazard is present.

V1.E9.4.7.1. When use of window panels is determined to be necessary and a risk assessment determines that there will be an associated glass hazard, blast-resistant windows of sufficient strength, as determined by an engineering analysis, must be used for:

V1.E9.4.7.1.1. Existing ESs, upon major modification or modified operations.

V1.E9.4.7.1.2. New construction; however, the use of glass panels in new construction should be avoided.

V1.E9.4.7.2. The framing and sash of such panels must be of sufficient strength to retain the panel in the structure for the expected blast loads from an explosion at any PES.

V1.E9.4.7.3. **(Added)(AF)** Minimize or remove glass panels on the side of facilities facing the explosives facilities.

V1.E9.4.7.4. **(Added)(AF)** Use tempered glass that breaks into small pieces with rounded edges.

V1.E9.4.7.5. **(Added)(AF)** Use glazing, anti-shatter films, nets, or blast curtains. Where films are used, the base fire department notes this type of construction on pre-fire plans to facilitate fire-fighting personnel entry in emergencies.

V1.E9.4.8. **(Added)(AF)** Unless otherwise specified, the design requirements in this section apply to all existing and new construction of explosives facilities, to include specific explosives facility designs covered in **Volume 2 – Enclosure 5**. Unless specifically excluded, the requirements in this section apply to licensed explosives storage locations and to locations involving explosives operations not requiring explosives siting. This section also provides requirements for the construction, maintenance, and repair of explosives facilities as well as equipment in these facilities.

V1.E9.4.9. (Added)(AF) Glass Panels in Facilities Exposed to Explosives Hazards.

V1.E9.4.9.1. **(Added)(AF)** Provide engineering analyses and design details, as part of the ESP package, to demonstrate compliance with paragraph **V1.E9.4.7.** The analyses must include the information addressed in paragraph **V1.E9.4.7.**

V1.E9.4.9.2. **(Added)(AF)** For modification of an existing occupied facility within an IBD arc, remove existing glass panels, if practical, as part of the scope of modification. Do not add glass panels unless deemed operationally necessary. If existing glass panels are not removed or the addition of glass panels is deemed operationally necessary, perform a risk assessment and use engineering mitigation actions to eliminate the hazard or process a waiver or exemption IAW **Volume 1 – Enclosure 3** or comply with paragraphs **V1.E9.4.7.** and **V1.E9.4.9.1. (T-1).**

V1.E9.4.9.3. **(Added)(AF)** Existing glass panels that are replaced due to damage (e.g., cracked or broken) must be replaced with equivalent strength or stronger glass panels. **(T-1).**

V1.E9.4.9.4. **(Added)(AF)** Glass skylights will not be used in any facility within an IBD arc. **(T-1).**

V1.E9.4.10. **(Added)(AF)** Using SDWs, or properly rated fire walls, to protect from fragment or thermal hazards.

V1.E9.4.11. **(Added)(AF)** UFC 3-340-02 contains design procedures to achieve personnel protection, protect facilities and equipment, and prevent propagation of explosions.

V1.E9.5. QRA. A QRA tool for risk management of explosives storage and operating scenarios, and the associated exposures (related or unrelated personnel and facilities) to those scenarios, can provide for a comparison of risks before acceptance of risks associated with the selected scenarios. See **Volume 6 – Enclosure 5** for additional information on QRA.

V1.E9.6. (ADDED)(AF) HEALTH HAZARD ASSESSMENTS.

V1.E9.6.1**. (Added)(AF)** Using organizations must ensure Bioenvironmental Engineering conducts a health hazard assessment of the work area and operation when dust or concentrations of vapors, fumes, or gases from explosives, equipment, or other chemicals in the work area are present. **(T-1).**

V1.E9.6.2**. (Added)(AF)** The squadron commander must accept bioenvironmental assessment risks before operations may begin. **(T-1).**

V1.E9.7. (ADDED)(AF) ENVIRONMENTAL ASSESSMENTS. Using organizations must ensure each explosives operation is evaluated for compliance with environmental standards. **(T-1).** Include all solid and hazardous wastes generated during all phases of the operation in the evaluation. **(T-1).** Identify requirements for the control, storage, and disposition of solid and hazardous wastes in written procedures. **(T-1).**

VOLUME 1 – ENCLOSURE 10: HAZARD IDENTIFICATION FOR FIREFIGHTING AND EMERGENCY PLANNING

V1.E10.1. SCOPE AND APPLICATION

V1.E10.1.1. This enclosure establishes standard firefighting hazard identification measures to ensure a minimum practicable risk in fighting fires involving AE. These identification measures are based on the classification of AE fires into four fire divisions according to their predominant hazard. This enclosure also provides guidelines to DoD Components for the development of emergency plans, which include safety, security, and environmental protection. These plans must be coordinated with local authorities.

V1.E10.1.2. Paragraphs **V1.E10.1.2.1.** through **V1.E10.1.2.6.** are outside the scope of this enclosure and are the responsibility of the DoD Component:

V1.E10.1.2.1. Firefighting procedures.

V1.E10.1.2.2. Training of firefighting personnel.

V1.E10.1.2.3. Use and maintenance of firefighting equipment and vehicles.

V1.E10.1.2.4. Provision of water supply and alarm systems.

V1.E10.1.2.5. First-aid measures.

V1.E10.1.2.6. Other measures required in firefighting.

V1.E10.1.3. AE hazard symbols and supplemental symbols, including CA symbols as described in section **V1.E10.4.**, are for firefighting situations.

V1.E10.2. FIRE DIVISIONS. There are four fire divisions. Fire division 1 indicates the greatest hazard. The hazard decreases with ascending fire division numbers from 1 to 4 and is related to the HD as shown in Table **V1.E10.T7.**

V1.E10.2.1. **(Added)(AF)** Table **V1.E10.T7.1.** provides further guidance for fire divisions and possible actions to be taken.

Table V1.E10.T7. Fire Divisions

Fire Division	Predominant Hazard	HD
1	Mass explosion	1.1 and 1.5
2	Non-mass explosion, fragment producing	1.2 and 1.6
3	Mass fire, minor blast or fragment	1.3
4	Moderate fire, no blast or fragment	1.4

Table V1.E10.T7.1. (Added)(AF) Fire Division Hazards and Actions.

FIRE DIVISION	MATERIALS	HAZARD	ACTION/REMARKS
1	HD 1.1, HD 1.5, and Class IV liquid propellants	Mass explosion	1. Do not fight fire unless rescue attempt is planned. 2. If there is suitable separation to symbol 1 materials and fire chief approves, fire-fighting forces may attempt to extinguish the fire. 3. If personal safety is in doubt, take cover.
2	HD 1.2 and HD 1.6	Non-mass explosion, fragment producing	1. Give alarm; attempt to extinguish fire if in early stage. 2. Firefighting forces must fight fire. If not possible, prevent spread of fire. 3. Detonation of items could occur. Provide protection from fragments.
3	HD 1.3	Mass fire, minor blast or fragment	1. May be fought if explosives not directly involved. 2. If WP munitions are involved, smoke is liberated. a. WP munitions may explode. b. Immerse Phosphorus in water or spray with water continuously. 3. For fires involving hexachlorethane (HC) and incendiaries use dry sand or dry powder in early stage. 4. For fires involving pyrotechnics and magnesium incendiaries. a. Protect adjacent facilities and equipment. b. Do not use carbon dioxide, Halon extinguishers or water on or near munitions. c. Allow magnesium to cool unless upon flammable material. In this case, use a 2-inch layer of dry sand or powder on the floor and rake the burning material onto this layer and re-smother.
4	HD 1.4	Moderate fire, no blast or fragment	1. Fight these fires. 2. Expect minor explosions and hot fragments.

V1.E10.3. FIRE DIVISION SYMBOLS

V1.E10.3.1. The four fire divisions are represented by four distinctive symbols so that firefighting personnel can recognize the hazards. A fire division number is shown on each symbol. For the purpose of identifying these symbols from long range, the symbols differ in shape, as described in Table **V1.E10.T8.**

Table V1.E10.T8. Fire Division Symbols

Shape	Fire Division Symbol
Octagon	1
Cross	2
Inverted Triangle	3
Diamond	4

V1.E10.3.2. The shape and dimensions of the symbols are shown in Figure **V1.E10.F2.** This shape and color scheme is consistent with UN, North Atlantic Treaty Organization (NATO), and International Maritime Organization requirements. For application on doors or lockers inside buildings, half-sized symbols may be used.

V1.E10.3.2.1. **(Added)(AF)** Obtaining Firefighting Symbol Decals. NSN of standard and half-size decals are listed in Figures **V1.E10.F2.**, **V1.E10.F3.**, and **V1.E10.F4.** Make backing for fire symbol decals the shape of the decal and out of non-combustible material. If heat from the fire burns off the numbers, the fire department can act on the shape. AFVA 91-216 is available through publication channels.

V1.E10.3.2.2. **(Added)(AF)** Purpose of Posting Firefighting Symbols. Firefighting symbols are used as a back-up precaution for alerting response personnel to explosives or chemicals present. Firefighting symbols posted on nuclear, chemical, or conventional weapon storage sites will comply with paragraph **V1.E10.3.2.3.** unless otherwise directed by the Base Fire Chief (direction must be in writing). **(T-1).** These written directions notify personnel that local conditions (i.e., security considerations) may make it undesirable to identify munitions with fire symbols at the actual storage locations.

V1.E10.3.2.3. **(Added)(AF)** Posting Requirements for Firefighting Symbols.

V1.E10.3.2.3.1. **(Added)(AF)** Post the fire symbol and chemical symbol that applies to the most hazardous material present at nonnuclear explosives locations. **(T-1).**

V1.E10.3.2.3.2. **(Added)(AF)** When non-Class 1 hazardous items or materials are stored or used in a facility, without other items of Class 1, identify the predominant hazard to guide emergency response personnel. **(T-1).** In this case, placards are required IAW NFPA and OSHA regulations. **(T-0).** Do not display NFPA and OSHA placards concurrently with Class 1 fire symbols. **(T-1).**

V1.E10.3.2.3.3. **(Added)(AF)** Post firefighting symbols when AE or chemical agents are placed in a facility or location, and remove the symbols when the AE or chemical agents are removed. **(T-1).** The person in charge of the operation is responsible for posting or changing the symbols.

V1.E10.3.2.3.4. **(Added)(AF)** Notify the Emergency Communication Center (ECC) each time firefighting symbols are changed. **(T-1).**

V1.E10.3.2.3.5. **(Added)(AF)** Half-sized symbols may be used on doors or lockers inside buildings. Additionally, half-size symbols may also be used for individual bays on structures where full size symbols prohibit the proper functioning of the doors. Post full size symbols for the highest hazard and applicable sets to be visible from all approach roads. **(T-1).**

V1.E10.3.2.3.6. **(Added)(AF)** Licensed Explosives Storage Locations.

V1.E10.3.2.3.6.1. **(Added)(AF)** Post symbols on exterior and interior entrances to rooms licensed for storing AE. **(T-1).**

V1.E10.3.2.3.6.2. **(Added)(AF)** Post symbols on lockers or containers licensed for storing AE. **(T-1).**

V1.E10.3.2.3.6.3. **(Added)(AF)** Posting symbols on the exterior of buildings containing licensed storage locations are optional, provided the Base Fire Chief approves in writing. When posted, ensure symbols are visible from all approach roads.

V1.E10.3.2.3.7. **(Added)(AF)** Non-Flightline Sited Explosives Locations.

V1.E10.3.2.3.7.1. **(Added)(AF)** Ensure symbols are visible from all approach roads. **(T-1).**

V1.E10.3.2.3.7.2. **(Added)(AF)** When one symbol applies to all AE within a storage area or on a service road, it may be posted at the entry control point or row entrance.

V1.E10.3.2.3.7.3. **(Added)(AF)** Post individual symbols on each door of a multicube storage magazine. **(T-1).** Post the symbol for the highest hazard and applicable sets to be visible from all approach roads. **(T-1).**

V1.E10.3.2.3.8. **(Added)(AF)** Flightline Sited Explosives Locations.

V1.E10.3.2.3.8.1. **(Added)(AF)** Identify aircraft loaded with nonnuclear weapons with symbols posted at each aircraft or aircraft shelter. **(T-1).**

V1.E10.3.2.3.8.2. **(Added)(AF)** One fire symbol may be posted at the entry point (point of entry for fire-fighting personnel) to an aircraft area. **(T-1).**

V1.E10.3.2.3.8.3. **(Added)(AF)** Notify the ECC when each aircraft is loaded or unloaded. Give aircraft parking location and type of explosives involved. **(T-1).**

V1.E10.3.2.3.8.4. **(Added)(AF)** During mass loading of three or more aircraft, when a fire truck is present, notify the ECC as soon as the last loading is complete. **(T-1).**

V1.E10.3.3. At the discretion of the DoD Components, circumstances (e.g., security) may make it undesirable to post fire symbols at an AE storage site.

V1.E10.3.4. **(Added)(AF)** Exceptions to Posting Firefighting Symbols.

V1.E10.3.4.1. **(Added)(AF)** Locations with aircraft having only exempted devices according to paragraph **V4.E3.5.2.** This exception does not apply to explosives cargo.

V1.E10.3.4.2. **(Added)(AF)** Missile sites with a single type of weapon system, such as intercontinental ballistic missile (ICBM) sites.

V1.E10.3.4.3. **(Added)(AF)** Locations with 1,000 rounds or less of HD 1.4 small arms ammunition.

V1.E10.3.4.4. **(Added)(AF)** When, by agreement, host-nation symbols are used.

V1.E10.3.4.5. **(Added)(AF)** When the responsible commander temporarily orders them removed for emergency security purposes.

V1.E10.3.4.6. **(Added)(AF)** Locations storing or maintaining nuclear weapons or both nuclear and nonnuclear weapons. Maintain a map or listing of munitions locations. Use line numbers or symbols from TO 11N-20-11 for nuclear weapons. Provide this information to the Fire Department. Update as changes occur.

V1.E10.3.4.7. **(Added)(AF)** Aircraft loaded with nuclear weapons or with nonnuclear and nuclear weapons within the same designated area.

V1.E10.3.4.8. **(Added)(AF)** Aircraft in a designated explosives parking area if described in a local publication. Include the class or division, governing symbol, emergency procedures and the requirement to notify the Fire Department.

V1.E10.3.4.9. **(Added)(AF)** Locations storing only assembled aircrew flight equipment (e.g., parachutes, aircrew flight equipment kits, life rafts, life preservers, etc.) containing authorized explosives, when approved by the Base Fire Chief or authority having jurisdiction.

Figure V1.E10.F2. Fire Division Symbols

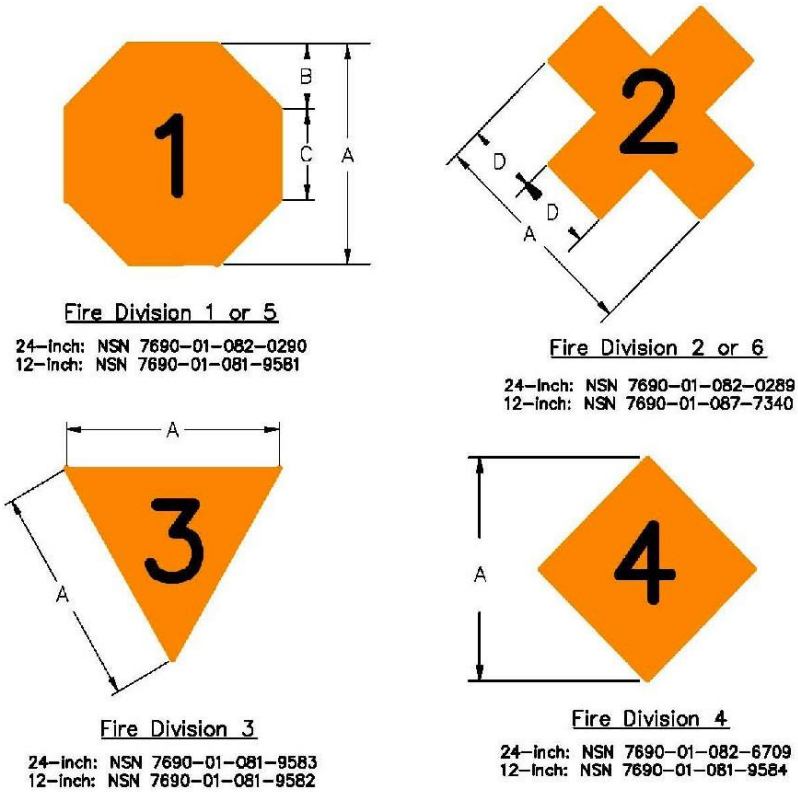

Dimensions	Large Symbol		Small Symbol	
	inches	metric (mm)	inches	metric (mm)
A	24	610	12	305
B	7	178	3.5	89
C	10	254	5	127
D	8	203	4	102
Letters (height)	10	254	5	127
Letters (thickness)	2	51	1	25

Colors (in accordance with Federal Standard 595C or General Services Administration (GSA) Catalog)
Background: Orange #12246
Letters: Black #17038

NSN = national stock number

V1.E10.4. CA AND CHEMICAL MUNITION HAZARD SYMBOLS

V1.E10.4.1. The storage of CAs and chemical munitions requires the use of chemical hazard symbols. These symbols as identified in Figures **V1.E10.F3.** and **V1.E10.F4.** must be used in conjunction with fire symbols, where appropriate. Some of the common CAs used in AE, the CG of that AE, and the chemical hazard symbols required in storage are specified in Table **V1.E10.T9.**

V1.E10.4.2. Paragraphs **V1.E10.4.2.1.** through **V1.E10.4.2.5.** describe these symbols, the hazards indicated by the symbols, and the recommended protective clothing and equipment to be used for fighting fires involving these CAs and chemical munitions. The DoD Components must determine protective clothing requirements for other than firefighting situations.

V1.E10.4.2. **(Added)(AF)** Where respiratory protection (self-contained breathing apparatus (SCBA) and protective masks) are used, personnel must implement a workplace respiratory protection program IAW AFI 48-137. **(T-1).** Reference the item TO, or contact Bioenvironmental Engineering for protective clothing requirements for situations other than firefighting. See AFI 10-2501 for further guidance.

V1.E10.4.2.1. Set 1 of chemical hazard symbol 1 requires full protective clothing as identified in Figure **V1.E10.F3.** and Table **V1.E10.T9.** and indicates the presence of highly toxic CAs that may cause death or serious damage to body functions. These types of full protective clothing must be used:

V1.E10.4.2.1.1. Service-certified protective gas mask.

V1.E10.4.2.1.2. Impermeable suit.

V1.E10.4.2.1.3. Impermeable hood.

V1.E10.4.2.1.4. Impermeable boots.

V1.E10.4.2.1.5. Impermeable undergarments.

V1.E10.4.2.1.6. Impermeable coveralls.

V1.E10.4.2.1.7. Impermeable protective footwear.

V1.E10.4.2.1.8. Impermeable gloves.

Figure V1.E10.F3. Chemical Hazard Symbols

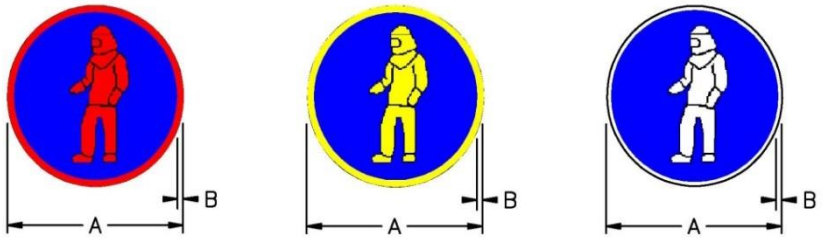

Symbol 1. Wear full protective clothing.

Background is blue, and figure and rim are as follows:

Red for Set 1 Protective Clothing:
24–inch: NSN 7690–01–081–9586
12–inch: NSN 7690–01–081–9585

Yellow for Set 2 Protective Clothing:
24–inch: NSN 7690–01–081–9587
12–inch: NSN 7690–01–082–0291

White for Set 3 Protective Clothing:
24–inch: NSN 7690–01–083–6272
12–inch: NSN 7690–01–081–9588

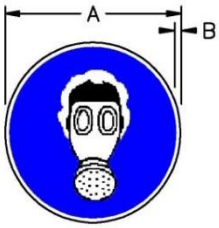

Symbol 2. Wear breathing apparatus.

Background is blue.
Figure and rim are white.
24–inch: NSN 7690–01–081–9589
12–inch: NSN 7690–01–082–6710

Symbol 3. Apply no water.

Background is white.
Circle and Diagonal are red.
Figures are in black.
24–inch: NSN 7690–01–082–2254
12–inch: NSN 7690–01–082–0292

Dimensions	Large Symbol		Small Symbol	
	inches	metric (mm)	inches	metric (mm)
A	24	610	12	305
B	.5	13	.25	6
C	2	51	1	25

Colors (in accordance with Federal Standard 595C or GSA Catalog)
Red #11105 White #17875
Blue #15102 Black #17038
Yellow #13538

Figure V1.E10.F4. Supplemental Chemical Hazard Symbols

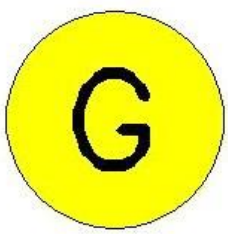

G–Type Nerve Agents

24–inch: NSN 7690–01–082–5418
12–inch: NSN 7690–01–081–7481

VX Nerve Agents

24–inch: NSN 7690–01–081–7483
12–inch: NSN 7690–01–081–7482

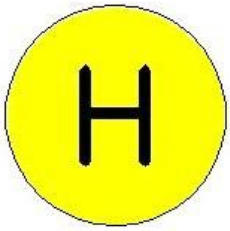

H–Type Mustard Agents

24–inch: NSN 7690–01–082–6713
12–inch: NSN 7690–01–083–1663

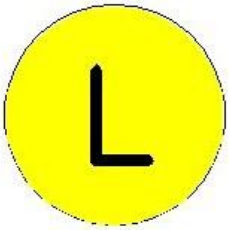

Lewisite

24–inch: NSN 7690–01–082–6715
12–inch: NSN 7690–01–082–6714

Colors (in accordance with Federal Standard 595C or GSA Catalog)
Background: Yellow #13538
Letters: Black #17038, measuring as follows:

12 inches [305 mm] high and 2 inches [51 mm] thick on a 24-inch [610-mm] diameter circle
6 inches [152 mm] high and 1 inch [25 mm] thick on a 12-inch [305-mm] diameter circle

Table V1.E10.T9. CG and Chemical Hazard Symbols Required for Storage of Chemical Ammunition and Substances

CAs and Munitions	CG[a]	Full Protective Clothing			Breathing Apparatus	Apply No Water
		Set 1	Set 2	Set 3		
Toxic Agents[b]	K	X				
Tear Gas, O-Chlorobenzol	G		X			
Smoke, Titanium Tetrachloride	G		X			
Smoke, Sulphur trioxide-chlorosulphonic acid solution	G		X			
Smoke, Aluminum-zinc oxide-hexachloroethane	G				X	X
WP	H			X		
PWP	H			X		
Thermite or Thermate	G				X	X
Pyrotechnic Material (common name for a magnesium incendiary mixture with an agent symbol of "PT")	G				X	X
Calcium Phosphide	L				X	X
Signaling Smokes	G				X	
Isobutyl methacrylate with oil	J				X	
Napalm	J			X		X
TEA	L			X		X

a	See **Enclosure 6** of this volume for information pertaining to CGs.
b	Toxic agents without explosives components that normally would be assigned to HD 6.1 may be stored as CG K.

V1.E10.4.2.2. Set 2 of chemical hazard symbol 1 requires full protective clothing as identified in Figure **V1.E10.F3.** and Table **V1.E10.T9.** and indicates the presence of harassing agents (e.g., riot control agents and smokes). Firefighting personnel equipped with normal heat-resistant clothing (e.g., bunker suits) and gas masks or self-contained breathing apparatuses (SCBAs) do not require the set 2 protective clothing. For all others, these types of protective clothing must be used:

V1.E10.4.2.2.1. Service-certified protective gas masks or SCBAs.

V1.E10.4.2.2.2. Permeable coveralls.

V1.E10.4.2.2.3. Protective gloves.

V1.E10.4.2.3. Set 3 of chemical hazard symbol 1 requires full protective clothing as identified in Figure **V1.E10.F3.** and Table **V1.E10.T9.** and indicates the presence of WP or other spontaneously combustible material. Firefighting personnel equipped with normal heat-resistant clothing (e.g., bunker suits) and gas masks or SCBAs do not require the set 3 protective clothing. For all others, this protective clothing must be used:

V1.E10.4.2.3.1. Service-certified protective gas masks or SCBAs.

V1.E10.4.2.3.2. Flame-resistant coveralls.

V1.E10.4.2.3.3. Flame-resistant gloves.

V1.E10.4.2.4. Chemical hazard symbol 2 requires the wearing of a breathing apparatus as identified in Figure **V1.E10.F3.** and Table **V1.E10.T9.** and indicates the presence of incendiary or readily flammable CAs that present an intense radiant heat hazard. Protective masks must be used to prevent inhalation of smoke from burning incendiary mixtures.

V1.E10.4.2.5. Chemical hazard symbol 3 warns against applying water as identified in Figure **V1.E10.F3.** and Table **V1.E10.T9.** and indicates a dangerous reaction will occur if water is used in an attempt to extinguish the fire.

V1.E10.5. FIREFIGHTING MEASURES

V1.E10.5.1. General

V1.E10.5.1.1. Firefighters should have a thorough knowledge of the hazards associated with AE fires and expected AE reactions. The DoD Component must brief the firefighting forces and other essential personnel on the known hazards and conditions existing at the fire scene before they approach the scene of the fire.

V1.E10.5.1.2. Fires involving AE will be fought according to the HD, fire division, progression of the fire, and procedures specified by the DoD Component. Special firefighting instructions addressing AE hazards will be developed according to the needs of the DoD Component.

V1.E10.5.1.3. All fires in the vicinity of AE must be immediately reported and:

V1.E10.5.1.3.1. Fought if the fire does not involve AE.

V1.E10.5.1.3.2. Not fought if the fire involves AE, or is supplying heat to the AE, or is so large that it cannot be extinguished with the equipment at hand. Personnel must be evacuated in accordance with paragraph **V1.E10.5.2.**

V1.E10.5.1.4. **(Added)(AF)** Each unit and installation fire protection agency with AE storage and operations must develop pre-incident plans as prescribed by AFI 32-2001. **(T-1).** Include all AE locations and operations, to include licensed explosives storage locations.

V1.E10.5.1.5. **(Added)(AF)** Each ECC will have an area map or computer-generated display showing all AE locations and operations and their firefighting symbols, to include licensed explosives storage locations. **(T-1).** This map must also show adjacent facilities at risk from explosives. **(T-1).** Whenever possible, ensure all sites have a civil engineering real property unique identifier.

V1.E10.5.2. Emergency Withdrawal Distances. Commanders are responsible for developing evacuation plans that include the applicable withdrawal distances as part of the installation's emergency planning, as described in section **V1.E10.6.**

V1.E10.5.2.1. Nonessential Personnel. These emergency withdrawal distances are intended for application in emergency situations only and are not used for facility siting.

V1.E10.5.2.1.1. The initial withdrawal distance for nonessential personnel must be at least IBD for the PES involved. If the fire involves AE, AE involvement is imminent, or the fire is or may become uncontrollable, then use the emergency withdrawal distances listed in Table **V1.E10.T10.** The emergency withdrawal distances depend on fire involvement and on whether or not the HD, fire division, and quantity of explosives are known. If fire is not affecting AE or involvement is not imminent, emergency authorities will determine the withdrawal distance based on the situation at hand.

V1.E10.5.2.1.2. Structures or protected locations offering equivalent protection for the distances in Table **V1.E10.T10.** may be used in lieu of relocating personnel from the structure or location to the specified emergency withdrawal distance.

V1.E10.5.2.2. Essential Personnel. Emergency authorities on site will determine the withdrawal distance for essential personnel at accidents. Emergency authorities will determine the essential personnel.

V1.E10.5.2.3. (Added)(AF) Nuclear Weapons. Nuclear weapons fire withdrawal distances are listed in TO 11N-20-11.

V1.E10.5.2.4. (Added)(AF) Improvised Explosive Device (IED) Withdrawal Distances. When determining more specific distances based upon suspicious or suspect devices use the Air Force "Recommended Improvised Explosive Device (IED) Minimum Evacuation Distance (MED)" chart provided in Air Force Tactics Techniques and Procedures (AFTTP) 3-4. The use of any secondary agency MED chart for explosive devices is prohibited due to the inconsistency of the mathematical methods used to determine their evacuation distances, which in most cases, recommend much smaller safety footprints. **(T-1).**

V1.E10.5.2.5. (Added)(AF) Withdrawal Distances for AE Not Involved in Fire (e.g., dropped munitions). Base the initial decision to evacuate non-essential personnel on the type of AE involved and its susceptibility to become more unstable, armed, or hazardous. Exercise good judgment, with regards to protecting personnel from the hazards of the AE or surrounding area. When evacuation is considered necessary, or is required by other technical guidance, clear

the area to a distance of 300 feet (125 feet for simulators and smoke producing devices). The incident commander, with recommendation from EOD, may adjust withdrawal distances.

V1.E10.5.3. Firefighting Involving CAs. AE containing both explosives and CAs, as indicated in Table **V1.E10.T9.**, requires special attention and precautions in firefighting. Fires involving such AE must be fought in accordance with their fire division characteristics. Responding personnel must consider the additional hazards and precautions discussed in **Volume 6 – Enclosure 4** for the CAs involved.

Table V1.E10.T10. Emergency Withdrawal Distances for Nonessential Personnel[a]

HD	Unknown Quantity (ft) *[m]*	Known Quantity (ft) *[m]*
Unknown, located in facility, truck, or tractor trailer	4,000 *[1,219]*	4,000 *[1,219]*
Unknown, located in railcar	5,000 *[1,524]*	5,000 *[1,524]*
1.1[b] and 1.5	Same as unknown facility, truck, trailer, or railcar, as appropriate	For Transportation: NEWQD ≤ 500 lbs: D = 2,500 ft *NEWQD ≤ 226.8 kg: D = 762 m* NEWQD > 500 lbs: D = 5,000 ft for railcars D = 4,000 ft for other modes *NEWQD > 226.8 kg:* *D = 1,524 m for railcars* *D =1,219 m for other modes* For bombs and projectiles with caliber 5 inch [127 mm] or greater: D = 4,000 ft *D = 1,219 m*
		For Facilities: NEWQD ≤ 15,000 lbs: D = 2,500 ft *NEWQD ≤ 6,804 kg: D = 762 m* 15,000 lbs < NEWQD ≤ 55,285 lbs: D = 4,000 ft *6,804 kg < NEWQD ≤ 25,077 kg:* *D = 1,219 m* NEWQD > 55,285 lbs: D = $105W^{1/3}$ *NEWQD > 25,077 kg: D = $41.65Q^{1/3}$*
1.2[b] and 1.6	2,500 *[762]*	2,500 *[762]*
1.3	600 *[183]*	Twice IBD with a 600 ft [183 m] minimum (V3.E3.T13)
1.4	300 *[91.5]*	300 *[91.5]*

a	Emergency withdrawal distances do not consider the potential flight range of propulsion units.
b	For HD 1.1 and HD 1.2 AE, the maximum range that fragments and debris will be thrown (including the interaction effects of stacks of items, but excluding lugs, strongbacks, and nose and tail plates), if known, may be used to replace the distances given.

V1.E10.5.4. Firefighting Involving Underground Storage Facilities. Entry to underground storage facilities following a fire or explosion requires special precautions. Emergency personnel will monitor for the presence of toxic fumes or oxygen-depleted atmospheres and evaluate structural damage during initial entry following an accident. Commanders must develop written procedures that define actions to be taken in such emergency situations.

V1.E10.6. EMERGENCY PLANNING. Installations or responsible activities must develop SOPs or plans designed to provide safety, security, and environmental protection for accidents involving AE. Plans must be coordinated with the applicable federal, State, and local emergency response authorities (e.g., law enforcement, fire departments, and hospitals) and any established local emergency planning committees. The SOPs or plans must include:

V1.E10.6. **(Added)(AF)** In addition to requirements prescribed in AFI 10-2501, the plan will include the following:

V1.E10.6.1. Specific sections and guidance that address emergency preparedness, contingency planning, and security. For security, the SOPs or plans must limit access to accident sites to trained and authorized personnel.

V1.E10.6.2. Procedures that minimize the possibility of an unpermitted or uncontrolled detonation, release, discharge, or migration of AE out of any storage unit when such release, discharge, or migration may endanger human health or the environment.

V1.E10.6.3. Provisions for prompt notification to emergency response and environmental agencies and the potentially affected public for an actual or potential detonation or uncontrolled release, discharge, or migration of AE that may endanger human health or the environment.

V1.E10.6.4. Provisions for complying with sections 11001 through 11022 of Title 42, United States Code (U.S.C.), also known as the "Emergency Planning Community Right-To-Know Act of 1986," and DoD or DoD Component implementing policies.

V1.E10.6.5. (Added)(AF) Emergency Operations.

V1.E10.6.5.1. **(Added)(AF)** If an immediately dangerous explosive situation is encountered, shut down all operations in the immediate vicinity, evacuate personnel to a safe location, and call EOD personnel to analyze and eliminate the hazard. **(T-1).** Do not resume operations until the hazard has been eliminated, removed, or otherwise determined safe by EOD personnel. **(T-1).**

V1.E10.6.5.2. **(Added)(AF)** Make pre-planned arrangements for emergency measures such as bomb threats, hung flares, ground burst simulators, etc. on installations without on-site EOD support. **(T-1).** Coordinate these arrangements with MAJCOM Safety, EOD Functional Staff, Air Force Installation and Mission Support Center Detachment. **(T-1).**

V1.E10.6.5.3. **(Added)(AF)** Locations used repeatedly for the emergency destruction of recovered military ordnance or hazardous explosive devices must have risk assessments pre-established and on file. **(T-1).**

V1.E10.6.5.4. **(Added)(AF)** Emergency destruction operations conducted at reduced QD ranges and non-standard destruction sites (e.g., EOD proficiency ranges or non-sited remote locations) may require the use of protective measures to limit fragmentation hazards. When the time and situation allows, emergency responders will use applicable technical data (e.g., Automated EOD Publication System, EOD Tactical Decision Aid, and DDESB Technical Paper 16) to apply protective measures. **(T-1).** Construction may increase acceptable time lines, and place essential personnel at increased risk, but through RM, the benefit of protective measures could outweigh the cost of no construction at all.

V1.E10.6.6. (Added)(AF) Fire Drills. Drills are conducted to train firefighting forces and unit personnel, and to ensure all other personnel involved understand their duties. **(T-1).** They are also conducted to evaluate fire alarm systems, firefighting equipment, and evacuation procedures.

V1.E10.6.6.1. **(Added)(AF)** Perform fire drills within the MSA at intervals not to exceed six months. **(T-1).**

V1.E10.6.6.2. **(Added)(AF)** Coordinate fire drills with the Base Fire Chief if a Fire Department response is involved. **(T-1).** This does not preclude unannounced drills of a Fire Department's response capabilities, provided coordination with the Base Fire Chief is accomplished at least 30 minutes before starting the drill.

V1.E10.6.6.3. **(Added)(AF)** Personnel responsible for conducting drills will ensure all involved are aware that the drill is an exercise, and not an actual fire. **(T-1).**

V1.E10.6.7. (Added)(AF) Heat-Producing Devices. In any explosives area, use devices that produce temperatures higher than 228 °F (109 °C) temporarily and only when essential. Develop written safety procedures for these devices and include details on the location, purpose, and duration of use. Coordinate the procedures through the base safety office and the Fire Department for approval. Properly installed, approved furnaces and electrical space heaters are exempt. Heat-producing devices are not allowed where exposed explosives are present. **(T-1).** Ensure personnel are qualified on the equipment prior to use. **(T-1).** A hot work permit is required to use any equipment exceeding 228 °F in a building containing explosives. **(T-1).**

V1.E10.6.8. (Added)(AF) Vegetation Control. The primary purpose of vegetation control is to limit the probability of combustible vegetation catching fire and to slow the spread of vegetation fires.

V1.E10.6.8.1. **(Added)(AF)** Except for firebreaks, maintain grounds in or near explosives storage areas or operating locations according to AFI 32-7064. Limit maintenance on these grounds to that which is necessary to prevent erosion or other waste of natural resources.

V1.E10.6.8.2. **(Added)(AF)** Balance the level of vegetation control with operational factors, such as cost to control, security, erosion prevention, BASH program requirements, and passive defense (camouflage).

V1.E10.6.8.3. **(Added)(AF)** Use varieties of vegetation that are resistant to burning where feasible.

V1.E10.6.8.4. **(Added)(AF)** Do not use herbicides or soil sterilants if complete removal of vegetation causes soil erosion.

V1.E10.6.8.5. **(Added)(AF)** Do not allow dead or cut vegetation to accumulate.

V1.E10.6.8.6. **(Added)(AF)** When animals are used for vegetation control on barricade surfaces and igloo earth cover, avoid overgrazing to prevent erosion.

V1.E10.6.9. (Added)(AF) Firebreaks. Where environmental and security factors allow, maintain 50-foot firebreaks around each PES except for ECMs. Maintain five feet around ECM ventilators.

V1.E10.6.10. (Added)(AF) Controlled Burning. The installation Wildland Fire Program Manager approves and provides oversight for controlled burning of vegetation.

V1.E10.6.10.1. **(Added)(AF)** Accomplish all controlled burns according to approved, site specific burn plans. See AFIs 32-2001 and 32-7064 for additional information.

V1.E10.6.10.2. **(Added)(AF)** The installation Wildland Fire Program Manager determines firefighting personnel and equipment to be present during burning operations.

V1.E10.6.11. (Added)(AF) Flammable Liquids for Cleaning. Do not use flammable liquids for cleaning purposes within an explosives area or near explosives, except as authorized by TO. Confine use to specific designated work areas. In-use stocks may not exceed a one-day supply. Store in approved safety containers or dispensers.

V1.E10.6.12. (Added)(AF) Paint and Other Flammable Materials. The following guidance applies when using paint and other flammable materials in AE locations.

V1.E10.6.12.1. **(Added)(AF)** Comply with AFMAN 91-203. **(T-1).** Store flammable materials in approved flammable storage cabinets, as required. **(T-1).**

V1.E10.6.12.2. **(Added)(AF)** Small quantities of flammable materials, such as paints, lubricants and solvents, required to support explosives maintenance operations may be stored in explosives operating locations as required. This storage must not be the primary purpose of the area. Incidental storage of flammable materials not supporting explosives maintenance operations may be authorized within 50 feet of explosives operating locations. Consult fire department officials prior to establishing flammable storage areas in, or near, explosives operating locations.

V1.E10.6.12.3. **(Added)(AF)** Do not store materials that add fuel sources (such as wood, paper, and rags) with flammable materials.

V1.E10.6.12.4. **(Added)(AF)** Open containers of flammable materials only when in use.

V1.E10.6.12.5. **(Added)(AF)** For outdoor storage, place flammable materials in weatherproof containers.

V1.E10.6.12.6. **(Added)(AF)** Locate flammable storage locations at least 50 feet from explosives locations or isolate flammable storage by standard fire walls approved for the type and quantity of flammables being stored.

V1.E10.6.12.7. **(Added)(AF)** Make available at least one fire extinguisher with a rating suitable for the type of material involved. Determine fire extinguisher location by the Fire Emergency Services or civilian-equivalent fire unit, as appropriate per AFMAN 91-203, Chapter 6.

V1.E10.6.13. (Added)(AF) Operating Support Equipment. The following guidance applies when operating support equipment (not including vehicles powered by internal combustion engines in AE locations).

V1.E10.6.13.1. **(Added)(AF)** Separation Distances.

V1.E10.6.13.1.1. **(Added)(AF)** Locate equipment at least 25 feet from AE. Equipment may be closer provided adequate ventilation and a fire-resistant dividing wall are provided.

V1.E10.6.13.1.2. **(Added)(AF)** Place aircraft ground support equipment as far away from AE as the length of the power cord, the length of the hose, or other equipment limitation will allow or as directed by applicable TO.

V1.E10.6.13.2. **(Added)(AF)** Equipment designed into and installed as part of an operating or storage facility is exempt from paragraph **V1.E10.6.13.1.**

V1.E10.6.13.3. **(Added)(AF)** Operations in HASs are exempt from paragraph **V1.E10.6.13.1.**

V1.E10.6.13.4. **(Added)(AF)** Do not refuel equipment within 100 feet of AE. **(T-1).**

V1.E10.6.14. (Added)(AF) Stacking Combustible Material. Comply with NFPA 1 and the following guidance when stacking combustible material in AE locations. **(T-1).**

V1.E10.6.14.1. **(Added)(AF)** Stack containers, dunnage, lumber and so forth in an orderly manner.

V1.E10.6.14.2. **(Added)(AF)** Keep stacks stable and separated as far as practical from operations.

V1.E10.6.14.3. **(Added)(AF)** Limit stacks to 6,000 cubic feet. **(T-1).**

V1.E10.6.14.4. **(Added)(AF)** Do not place bulk stacks of combustible materials closer than 100 feet from AE locations. **(T-1).**

V1.E10.6.14.5. **(Added)(AF)** If necessary, stack working quantities in the vicinity of AE. Remove all of the material upon completion of the operation or at intervals that prevent hazardous accumulation.

V1.E10.6.14.6. **(Added)(AF)** Provide suitable fire protection equipment.

V1.E10.6.14.7. **(Added)(AF)** When needed to prepare for combat operations, temporarily stack in or near the AE storage site those empty containers, dunnage, and lumber that cannot be removed while the work is in progress.

V1.E10.6.15. (Added)(AF) Fire Extinguishers. Unless otherwise directed by the Base Fire Chief, provide a minimum of two fully charged fire extinguishers, suitable for the hazards involved, for immediate use at any location where AE is being handled, except as noted.

V1.E10.6.15.1. **(Added)(AF)** See the AF Form 2047 for the licensed explosives storage locations.

V1.E10.6.15.2. **(Added)(AF)** Provide each explosives-laden vehicle used for transport with at least two portable 2A:10BC rated extinguishers that are serviceable, and immediately available. **(T-1).** If explosives-laden vehicles are parked at a location designated for explosive operations, additional fire extinguishers beyond those required in paragraph **V1.E10.6.15.** are not required. If the vehicle leaves the explosives location, additional extinguishers are required. Mount fire extinguishers IAW AFMAN 24-306, refer to Title 49 CFR Subpart 393.95 for requirements, and NFPA 10 for inspections.

V1.E10.6.15.3. **(Added)(AF)** Ensure at least one fire extinguisher is available for each item of powered MHE used to handle AE.

V1.E10.6.15.3.1. **(Added)(AF)** Individual fire extinguishers are not required for each piece of handling equipment during explosive operations if the requirements of paragraph **V1.E10.6.15.** are met.

V1.E10.6.15.3.2. **(Added)(AF)** If handling equipment is used to transport AE to a location where a second fire extinguisher is not immediately available, two portable 2A:10BC rated extinguishers are required for the handling equipment. **(T-1).**

V1.E10.6.15.4. **(Added)(AF)** Provide flightline fire extinguishers for aircraft according to munitions loading manuals, AFMAN 91-203, and TO 00-25-172.

V1.E10.6.16. (Added)(AF) Storing Water for Firefighting. Adequate water to fight fires must be available. **(T-1).** Coordinate with installation fire chief to determine the capacity of the water supplies (see paragraph **V4.E5.14.**).

V1.E10.6.17. (Added)(AF) Smoking and Electronic or Vapor Cigarettes. AFMAN 91-203, Chapter 24, prohibits smoking in aircraft maintenance facilities, flightline areas, and weapons storage and maintenance areas unless designated by the installation Fire Chief in coordination with the Maintenance Group Commander or equivalent, Airfield Manager, and the functional manager. Electronic or vapor cigarettes will not be introduced into facilities, open locations, vehicles, trailers or railcars containing explosives. This prohibition does not apply to multi-room structures where explosives are restricted, e.g., offices, breakrooms, etc. AFI 48-104 provides information on designated tobacco use areas. Additionally, for explosive locations, the following requirements apply:

V1.E10.6.17.1. **(Added)(AF)** Allow smoking and the use of electronic or vapor cigarettes in an explosives storage area or operating location only in specifically designated locations, where "designated tobacco areas" signs are posted.

V1.E10.6.17.2. **(Added)(AF)** A "No Smoking Except in Designated Areas" or "No Smoking" sign will be posted at each entrance to an explosives storage area. **(T-1).**

V1.E10.6.17.3. **(Added)(AF)** In an explosives storage area or operating location containing exposed explosives, include a notice that flame-producing devices must be turned over to the entry controller or placed in a container provided. **(T-1).**

V1.E10.6.17.4. **(Added)(AF)** Requirements for Designated Smoking Locations.

V1.E10.6.17.4.1. **(Added)(AF)** Do not place within 50 feet of any explosives locations (to include conveyances or MHE loaded with explosives items). **(T-1).**

V1.E10.6.17.4.2. **(Added)(AF)** Coordinate proposed location with weapons safety, CE and obtain installation fire chief or delegate approval. Approval will address whether a fire extinguisher must be available. Display a certification of approval in each designated smoking location. **(T-1).**

V1.E10.6.17.4.3. **(Added)(AF)** Provide suitable self-closing or self-contained properly marked receptacles for extinguishing smoking materials. **(T-1).**

V1.E10.6.17.4.4. **(Added)(AF)** Provision of an electrical push-button type lighter that cuts off when pressure is released, or when the lighter tips over, is recommended.

V1.E10.6.17.4.5. **(Added)(AF)** Persons wearing clothing contaminated with flammables, explosives or other hazardous materials are not allowed in designated smoking areas. **(T-1).**

VOLUME 1 – ENCLOSURE 11: TERMINATION OF USE OF FACILITIES FOR STORING AE

V1.E11.1. GENERAL TERMINATION PROCESS. Each storage facility no longer used to store AE must undergo a process to ensure that AE and any visible explosives residues are removed within 180 days from the last use of the storage facility. This helps ensure that no threats to human health or the environment remain when the unit is no longer to be used to store AE. This process must include:

V1.E11.1.1. Emptying the storage facility of all AE and related materials.

V1.E11.1.2. Cleaning the storage facility, as required, to remove any visible explosives residue.

V1.E11.1.3. Visually inspecting the storage facility for the presence of remaining AE or visible explosives residue. A knowledgeable individual appointed by the installation or responsible activity commander will conduct this inspection.

V1.E11.1.4. Removing from the storage facility all fire and chemical hazard symbols and marking the storage facility as empty.

V1.E11.1.5. Securing the storage facility to prevent inadvertent use or access.

V1.E11.1.6. Notifying the applicable emergency response and regulatory authorities of the change in the storage facility's use.

V1.E11.1.7. Recording the date the storage facility was inspected, the name and position of the inspector, and the results in permanent real estate records.

V1.E11.1.8. (Added)(AF) Elimination of Explosives Clear Zones. For additional guidance see AFI 32-9002 for change in use and AFI 32-9004 for real property disposal procedures.

V1.E11.1.8.1. **(Added)(AF)** Cancel the ESP used to establish an explosives clear zone when the use of an explosives location is no longer required.

V1.E11.1.8.2. **(Added)(AF)** Submit the ESP cancelation memorandum to the MAJCOM safety office. **(T-1).** MAJCOM safety office forwards a copy of the ESP cancelation to AFSEC/SEW.

V1.E11.2. ADDITIONAL TERMINATION REQUIREMENTS FOR FACILITIES IN WHICH WASTE MILITARY MUNITIONS WERE STORED. Ammunition storage units (ASUs) that have been used to store waste military munitions also must comply with the closure procedures in section **V7.E5.6.**

VOLUME 2: EXPLOSIVES SAFETY CONSTRUCTION CRITERIA

V2.1. INTRODUCTION. This volume provides criteria for the construction of barricades and explosives facilities, including facilities with reduced separation distances.

VOLUME 2 – ENCLOSURE 1: REFERENCES

See References section at the end of the manual.

VOLUME 2 – ENCLOSURE 2: RESPONSIBILITIES

See Volume 1 – Enclosure 2.

VOLUME 2 – ENCLOSURE 3: ELECTRICAL STANDARDS

V2.E3.1. GENERAL. This enclosure establishes safety standards for the design and installation of electrical equipment and wiring for explosives environments.

V2.E3.1.1. For the purposes of this volume, the DoD adopts Article 500, "Hazardous (Classified) Locations, Classes I, II, and III, Divisions 1 and 2," of the National Fire Protection Association (NFPA) 70, also known and referred to in this volume as the "National Electrical Code® (NEC)." The NEC establishes standards for the design and installation of electrical equipment and wiring for atmospheres containing combustible dusts, flammable vapors, or gasses that are comparably hazardous.

V2.E3.1.1. **(Added)(AF)** In addition to the standards in **Volume 2 – Enclosure 3**, comply with NFPA 77 and AFI 32-1065. **(T-0).**

V2.E3.1.2. This enclosure does not address extraordinarily hazardous situations (e.g., nitroglycerin manufacturing) that require special consideration and design features. In these situations, the DoD Components must develop site-specific design criteria.

V2.E3.1.3. **(Added)(AF)** Additional criteria specific to nuclear weapons storage, handling, and maintenance facilities apply as provided in AFMAN 91-118.

V2.E3.2. HAZARDOUS LOCATIONS. NEC definitions of Class I, Division 1 and Class II, Division 1 hazardous locations are modified as follows for DoD explosives applications:

V2.E3.2. **(Added)(AF)** The presence of explosives does not necessarily make an area a hazardous location. To ensure proper identification of a hazardous location, it is necessary to have knowledge of the properties of the explosives involved, especially thermal stability, and sensitivity to heat and spark.

V2.E3.2.1. Areas containing explosives dust or explosives that may, through handling, produce dust capable of being dispersed in the atmosphere are regarded as Class II, Division 1.

V2.E3.2.2. Areas in which explosives sublimation or condensation may occur are regarded as both Class I, Division 1, and Class II, Division 1.

V2.E3.2.3. **(Added)(AF)** Equipment must be approved not only for the class of location, but also for the explosive properties of the specific gas, vapor, or dust that will be present. **(T-1).**

V2.E3.2.4. (Added)(AF) Hardware in Hazardous Locations. To reduce the risk of accidental ignition by spark, consider the operational conditions in any hazardous location before choosing and installing hardware. **(T-1).** Certain hazards may be sufficient to warrant the use of materials that reduce the possibility of sparking. **(T-1).**

V2.E3.2.5. (Added)(AF) Ventilation in Hazardous Locations. Buildings with hazardous locations must comply with NFPA 91. **(T-0).** If air conditioning equipment is installed, it must be done per NFPA 90A and NFPA 90B. **(T-0).** Maintain, clean, and inspect exhaust systems thoroughly and service on a regular schedule per NFPA 90A and NFPA 90B. **(T-0).**

V2.E3.3. SPECIAL OCCUPANCIES. To ensure assignment to the proper hazardous location, class, and group, it is necessary to have knowledge of the properties of explosives involved. Minimum requirements include sensitivity to heat and spark and thermal stability.

V2.E3.3.1. Acceptable Approaches for Inadequate Protection. If the properties of an explosive are such that the requirements for Class I or Class II locations, or both, provide inadequate protection under prevailing conditions, use of any of these approaches is acceptable:

V2.E3.3.1.1. Use of intrinsically safe equipment as addressed in the NEC.

V2.E3.3.1.2. Use of purged or pressurized and suitably temperature-limited equipment.

V2.E3.3.1.3. Exclusion of electrical equipment from the hazardous atmosphere.

V2.E3.3.1.4. Isolation of equipment from the hazardous atmosphere by means of dust, vapor, or gas-free enclosures with surface temperatures positively maintained at safe levels.

V2.E3.3.2. Underground Storage Facilities. All wiring and electrical equipment in underground storage facilities, in addition to any other requirements of this enclosure, must be of moisture and corrosion-resistant materials and construction unless a site-specific analysis indicates that such construction is not necessary. Underground facilities must have emergency lighting systems to provide minimum illumination in the event of a power failure.

V2.E3.4. STATIC ELECTRICITY. Personnel and equipment in hazardous locations (section **V2.E3.2.**) and locations where static sensitive electro-explosive devices (EEDs) are exposed must be grounded in a manner that effectively discharges static electricity and prevents static electricity accumulations that may be capable of initiating dusts, gases, vapors, or exposed EEDs. Permanent equipment in contact with conductive floors and tabletops must not be considered grounded. Static grounds must be bonded to the facility's grounding system. (See **Enclosure 4** of this volume.)

V2.E3.4. **(Added)(AF)** Static electricity is created when two different materials come in contact and then are separated again; this includes when the two materials are rubbed against each other. Separated charges accumulate on the two materials, creating a voltage potential that can be discharged when either of the materials is moved close to an uncharged or grounded object. This discharge can cause a mishap if it occurs through, or in the presence of, a hazardous substance susceptible to electrostatic initiation. For this reason, take precaution against performing unnecessary actions that lead to the buildup of static voltages, take action to avoid the prolonged storage of static voltages on personnel or equipment, and take action to discharge static voltages in a safe and controlled manner during operations involving explosives. See paragraphs **V2.E3.4.2.** through **V2.E3.4.7.** for the static grounding and bonding system design and

inspection requirements. Refer to NFPA 77 and AFI 32-1065 for requirements on static grounding and bonding systems.

V2.E3.4.1. (Added)(AF) Requirement for Static Grounding. See paragraph **V2.E3.4.10.** for static grounding techniques and paragraph **V2.E3.4.11.** for methods to reduce the buildup of static electricity. Static grounding is required for:

V2.E3.4.1.1. **(Added)(AF)** Personnel, equipment, and explosives, when the responsible engineering function has determined grounding is necessary for specific maintenance or electrical test operations; grounding requirements will normally be included in the item TO.

V2.E3.4.1.2. **(Added)(AF)** Weapons systems in storage as required in the item TO.

V2.E3.4.1.3. **(Added)(AF)** Personnel and equipment in hazardous locations (see section **V2.E3.2.**).

V2.E3.4.1.4. **(Added)(AF)** Personnel handling EIDs (see electrically initiated devices in the Glossary). See paragraph **V2.E3.4.8.** for static grounding requirements for handling unpackaged EIDs. Always avoid directly touching an electrical primer.

V2.E3.4.1.5. **(Added)(AF)** Personnel handling exposed explosives (see exposed explosives in the Glossary). Static grounding for demolition operations are conducted per applicable 60-series TOs.

V2.E3.4.1.6. **(Added)(AF)** Explosive components incorporating an electrical initiating system when undergoing maintenance; assembly to, or disassembly from, an all-up-round (AUR) configuration; or electrical connection or disconnection. Unless required by TO, static grounding is not required when replacing components of AURs incorporating an electrical initiating system when the replacement operation does not require electrical connection or disconnection.

V2.E3.4.1.7. **(Added)(AF)** Aircraft, when explosives are being loaded or unloaded, as required in paragraph **V2.E3.4.9.**

V2.E3.4.2. (Added)(AF) Areas Requiring Static Grounding and Bonding Systems. Static grounding and bonding systems are required for the following (T-1):

V2.E3.4.2.1. **(Added)(AF)** Hazardous locations (see section **V2.E3.2.**).

V2.E3.4.2.2. **(Added)(AF)** Areas where EIDs are exposed.

V2.E3.4.2.3. **(Added)(AF)** Areas where exposed explosives are handled.

V2.E3.4.2.4. **(Added)(AF)** Areas where explosive components incorporating an electrical initiating system are undergoing maintenance; assembly to, or disassembly from, an AUR configuration; or electrical connection or disconnection.

V2.E3.4.2.5. **(Added)(AF)** Areas where electrically initiated munitions and explosive devices are undergoing maintenance and electrical test operations and the responsible engineering function has determined grounding is necessary. Refer to the specific item TO or similar product (i.e. test data package) to determine if grounding is necessary.

V2.E3.4.2.6. **(Added)(AF)** Areas where explosives are loaded or unloaded on aircraft (unless exempted per paragraph **V2.E3.4.9.1.** or **V2.E3.4.9.2.**).

V2.E3.4.3. (Added)(AF) Static Grounding and Bonding.

V2.E3.4.3.1. **(Added)(AF)** Unless noted, eliminate or reduce static electricitys hazards providing an electrically continuous path to ground via ground wire, cable, or strap.

V2.E3.4.3.1.1. **(Added)(AF)** Grounds should be one continuous ground wire, cable, or strap. Avoid connecting short ground wires, cables, or straps together to make a longer one.

V2.E3.4.3.1.2. **(Added)(AF)** Each ground wire, cable, strap must be connected to the item and facility ground individually. **(T-1).** Avoid connecting multiple ground wires, cables, or straps to another ground wire, cable or strap connecting mechanism (alligator clip, clamp, etc.).

V2.E3.4.3.2. **(Added)(AF)** Static grounding bars or other grounding devices may be appropriate for some operations (see paragraph **V2.E3.4.8.1.**). Such grounding bars or devices will be located at the entrance to or within the area where work will be performed.

V2.E3.4.3.3. **(Added)(AF)** When all of the objects are conductive, they can be grounded by electrically connecting all parts to a common ground conductor.

V2.E3.4.3.4. **(Added)(AF)** Partial grounding, or using conductors that are too weak or have too much resistance, may increase the static hazard by providing opportunities for discharge through an uncontrolled path to ground.

V2.E3.4.3.5. **(Added)(AF)** Electrical continuity may be broken by oil on bearings, paint, or rust at any contact point. To get a continuous circuit, grounding straps must be used to bridge such locations. **(T-1).**

V2.E3.4.3.6. **(Added)(AF)** All metallic utility lines and pipes, including steam, water, and air conditioning lines must be bonded to the LPS just before they enter the building. **(T-1).**

V2.E3.4.3.7. **(Added)(AF)** Do not place electrically energized objects or tools on grounded surfaces where explosives operations are conducted. **(T-1).** If electrically energized objects or tools (heat sealers, heat guns, etc.) are required for the operation, place these objects on a non-conductive surface to prevent continuity between the electrically energized object or tool and the grounded surface. **(T-1).**

V2.E3.4.4. (Added)(AF) Hazardous locations:

V2.E3.4.4.1. **(Added)(AF)** Ground all conductive parts of equipment IAW the NEC.

V2.E3.4.4.2. **(Added)(AF)** Where the installation permits viewing, make a visual inspection of all static bonds and grounds for breaks and corroded connections before starting operations on each day the equipment is used. **(T-1).** Test any suspected connections and bring them up to required standards before starting operations. **(T-1).**

V2.E3.4.4.3. **(Added)(AF)** In non-hazardous locations, visually inspect static bonding and grounding straps for breaks and corroded connections IAW AFI 32-1065. **(T-1).** Test suspect connections for continuity, bring up to required standards, and re-test before starting operations. **(T-1).**

V2.E3.4.5. (Added)(AF) Temporary Static Grounding or Bonding Cables.

V2.E3.4.5.1. **(Added)(AF)** Perform a continuity test on temporary static grounding or bonding cables at the time of their initial placement into service. **(T-1).**

V2.E3.4.5.2. **(Added)(AF)** Prior to each subsequent use, inspect the cables for any evidence of corrosion or damage. **(T-1).**

V2.E3.4.5.2.1. **(Added)(AF)** Replace the clamps if jaws are deformed, spring is weak, or other defect is noted that would prevent a good connection. **(T-1).**

V2.E3.4.5.2.2. **(Added)(AF)** Replace the cables if more than one third of the cable strands are broken. **(T-1).** Deteriorated or damaged plastic coating does not affect the electrical capability of cables.

V2.E3.4.5.2.3. **(Added)(AF)** Perform a continuity test if a lack of continuity is suspected due to damage, corrosion, or after any components have been replaced. **(T-1).**

V2.E3.4.5.3. **(Added)(AF)** Documentation of continuity testing on temporary static grounding or bonding cables is not required. **(T-1).**

V2.E3.4.6. (Added)(AF) Static Grounding or Bonding Reels.

V2.E3.4.6.1. **(Added)(AF)** Give all installed static discharge reels a continuity test at the time of their initial installation. **(T-1).**

V2.E3.4.6.2. **(Added)(AF)** Prior to each subsequent use, visually inspect the static discharge reel for security of mounting and evidence of any corrosion or damage. Perform a continuity test if a lack of continuity is suspected due to damage, corrosion, or after any components have been replaced or repaired. **(T-1).**

V2.E3.4.6.3. **(Added)(AF)** Accomplish the test by extending the entire length of the cable. **(T-1).**

V2.E3.4.6.4. **(Added)(AF)** Documentation of continuity testing on temporary static grounding or bonding reels (or cables) is not required.

V2.E3.4.7. (Added)(AF) Installed Systems and Equipment Grounds. Pay special attention to the installation and maintenance of electrical grounding where explosives are involved in accordance with the following:

V2.E3.4.7.1. **(Added)(AF)** Bond all grounding mediums together. **(T-1).**

V2.E3.4.7.2. **(Added)(AF)** If the structure is equipped with an LPS, interconnect all grounds, including static grounds, as outlined in AFI 32-1065. **(T-1).**

V2.E3.4.7.3. **(Added)(AF)** Test grounding when installed to ensure that design specifications are met and at intervals as prescribed in AFI 32-1065. Document all tests and inspections on appropriate forms or automated products. **(T-1).**

V2.E3.4.7.3.1. **(Added)(AF)** Before making any electrical continuity and resistance tests or electrical repairs, remove all exposed explosives, EIDs, and explosives dust, gases and vapors that are subject to initiation under the specific circumstances. **(T-1).**

V2.E3.4.7.3.2. **(Added)(AF)** If there is an operating generator or energized transformer at the location, connect a shunt grounding strap before opening an installed grounding connection for repair or replacement. **(T-1).**

V2.E3.4.8. (Added)(AF) Static Grounding for Handling Unpackaged EIDs. When EIDs are unpackaged and handled, follow item TO requirements for static grounding and comply with the following:

V2.E3.4.8.1. **(Added)(AF)** Personnel must periodically ground themselves. **(T-1).** Post signs at entrances and in the room reminding personnel that periodic grounding is required, except where compliance would create any additional personnel safety hazard. **(T-1).** Install one or more static grounding bars or devices and require personnel to touch the grounding device before handling the EID and at frequent intervals while working to discharge any static potential (see paragraph **V2.E3.4.3.2.**). **(T-1).**

V2.E3.4.8.2. **(Added)(AF)** Where feasible, comply with paragraphs **V2.E3.4.10.1.1.** and **V2.E3.4.10.1.3.**

V2.E3.4.8.3. **(Added)(AF)** Adhere to the precautions in paragraph **V2.E3.4.11. (T-1).**

V2.E3.4.8.4. **(Added)(AF)** Every person who handles exposed EIDs must be careful not to allow the EID's electrical contacts to touch any of the metal surfaces of aircraft and missile skin or structure. Additionally, the handler must actively take precautions against allowing the buildup or discharge of static electric energy through the EID's electrical contacts. **(T-1).**

V2.E3.4.9. (Added)(AF) Static Grounding for Aircraft During Explosives Loading and Unloading. Ground combat and cargo aircraft during explosives loading or unloading operations, except as noted in paragraphs **V2.E3.4.9.1.** and **V2.E3.4.9.2.** See TO 00-25-172 and applicable aircraft TOs for grounding procedures. Personnel handling the explosives will equalize their static electrical potential to that of the aircraft, vehicle, or handling equipment, before beginning operations and at frequent intervals thereafter to discharge any static buildup. **(T-1).** Ensure the aircraft being loaded or unloaded is not within the hazard zone of any operating transmitters (see AFI 91-208). **(T-1).**

V2.E3.4.9.1. **(Added)(AF)** Cargo aircraft do not require grounding during engine running onload or offload (ERO) operations.

V2.E3.4.9.2. **(Added)(AF)** Grounding of aircraft during explosives loading or unloading is recommended but not required where there are unusual parking problems in operating from bare or limited bases, nonmilitary airfields, host-nation airfields, etc. This exception does not relieve commands from responsibility for providing proper grounding in locations where operations continue or where parking facilities are required on a recurring basis. Where static grounding facilities are not available at a suitable parking location, use the best alternate method of reducing the hazard in the following order or precedence:

V2.E3.4.9.2.1. **(Added)(AF)** Keep static grounding to 10,000 ohms or less by using grounding rods.

V2.E3.4.9.2.2. **(Added)(AF)** Equalize the static electrical potential between the aircraft and the vehicle or handling equipment used in loading or unloading by bonding them together with an approved static ground wire, cable, or strap (see paragraph **V2.E3.4.5.**). It might not be feasible to bond the handling equipment to the aircraft if the handling equipment must move during the operation.

V2.E3.4.10. (Added)(AF) Static Grounding Techniques. In the absence of TO guidance, this paragraph provides techniques for accomplishing static grounding (see sections **V2.E3.2.** through **V2.E3.4.** for further guidance).

V2.E3.4.10.1. **(Added)(AF)** Protective clothing is not a substitute for personnel static grounding. Accomplish static grounding of personnel by any of the following:

V2.E3.4.10.1.1. **(Added)(AF)** Through the use of wrist-straps connected to the facility ground.

V2.E3.4.10.1.2. **(Added)(AF)** By periodically touching a grounded surface (such as an airframe) or a grounding bar.

V2.E3.4.10.1.3. **(Added)(AF)** By wearing conductive footwear on conductive floors, mats, or runners (see section **V2.E3.4.**), if the floor, mat, or runner is properly grounded.

V2.E3.4.10.2. **(Added)(AF)** Accomplish static grounding of equipment by any of the following:

V2.E3.4.10.2.1. **(Added)(AF)** Through the use of a static ground wire, cable, or strap between the item to be grounded and the facility ground (see section **V2.E3.4.**).

V2.E3.4.10.2.2. **(Added)(AF)** By using conductive tabletops, or conductive material coverings on the tabletop, if the conductive surface or material is properly grounded.

V2.E3.4.10.3. **(Added)(AF)** When making a grounding connection, attach the ground wire, cable, or strap to the item requiring grounding first, then connect the other end of the ground wire, cable, or strap to the approved facility grounding system. This ensures that if a spark occurs, it will occur at the connection to the facility grounding system instead of at the item.

V2.E3.4.10.3.1. **(Added)(AF)** If the existing static grounding or bonding reels were permanently attached to the facility ground when installed, a temporary grounding connection using an additional cable must be made first (when possible) following the procedure in paragraph **V2.E3.4.10.3.** before connecting the item to the permanent system.

V2.E3.4.10.3.2. **(Added)(AF)** When static grounding or bonding reels are installed, either in new or existing facilities, do not permanently attach them to the facility grounding system.

V2.E3.4.10.4. **(Added)(AF)** When a different or new ground is needed for an item, always make the new ground connection first (in the same manner as described in paragraph **V2.E3.4.10.2.**) before disconnecting the existing ground connection (make-before-break grounding). This ensures that the item is grounded at all times while transitioning from one ground connection to another.

V2.E3.4.11. (Added)(AF) Methods to Reduce the Hazards of Static Electricity.

Minimize the possibility and severity of both the buildup and discharge of hazardous static electric potentials by observing the following guidance.

V2.E3.4.11.1. **(Added)(AF)** Whenever possible, personnel must avoid using rags or wearing outer garments made of materials having high static-generating characteristics (e.g., 100 percent polyester, nylon, rayon, silk, wool, etc.). Wool socks, glove inserts, and caps as well as undergarments of synthetic fabrics are less of a hazard than outer garments such as jackets or pants.

V2.E3.4.11.2. **(Added)(AF)** Whenever possible, personnel must use rags or wear outer garments made of cotton or a cotton-synthetic blend.

V2.E3.4.11.2.1. **(Added)(AF)** Clothing materials acceptable for flightline use (per Allowance Standard 016) are acceptable for handling munitions; this includes GORE-TEX® even though it is 100 percent nylon.

V2.E3.4.11.2.2. **(Added)(AF)** When clothing is worn that has a high static-generating characteristic, such as GORE-TEX ® or some flak vests, emphasize the techniques listed for controlling the discharge of any generated potentials.

V2.E3.4.11.3. **(Added)(AF)** Control the discharge of any generated static electric potential by touching a static grounding bar or device (or by equalizing it to that of the system being handled) prior to touching the system, and at frequent intervals during operations.

V2.E3.5. ELECTRIC SUPPLY SYSTEMS. PESs located near electric supply lines may create mutual hazards. To protect against these hazards, the following separation requirements apply to all new construction. PTRD and IBD, as specified in paragraphs **V2.E3.5.3.** and **V2.E3.5.4.** are based on airblast overpressure only; fragment distances do not apply.

V2.E3.5. **(Added)(AF)** This paragraph does not apply to licensed explosives storage locations and locations involving explosives operations not requiring explosives siting. See paragraph **V3.E3.1.1.6.11. f**or QD and fire protection separation requirements between explosives facilities and electric supply system components.

V2.E3.5.1. Electric lines serving explosives operating facilities must be installed underground from a point not less than 50 feet (ft) [15.3 meters (m)] away from such facilities.

V2.E3.5.2. Overhead electric service lines must be no closer to a combustible PES or an open PES than the length of the electric lines between the nearest service poles and the length of the nearest service pole. An exception to this requirement is allowed when an effective means (e.g., line spacers, weights) is provided to ensure that energized lines on breaking cannot come into contact with the facility or its appurtenances.

V2.E3.5.3. Electric distribution lines carrying less than 69 kilovolts, the tower or poles supporting those lines, and unmanned electrical substations must be no closer to PESs than PTRD. Lesser distance is permitted by **Volume 3 – Enclosure 3** for the placement of electrical substations and transformers that support explosives areas.

V2.E3.5.4. Electric transmission lines carrying 69 kilovolts or more and the tower or poles supporting them must be located no closer to the PES than:

V2.E3.5.4.1. IBD, if the line in question is part of a grid system serving a large off-base area.

V2.E3.5.4.2. PTRD, if loss of the line does not create serious social or economic hardships.

V2.E3.5.5. Electric transmission lines that can be interrupted without loss of power (i.e., power is rerouted through existing lines or networks) must be separated from explosives sites in accordance with paragraph **V2.E3.5.3.**

V2.E3.6. SURGE PROTECTION FOR INCOMING CONDUCTORS

V2.E3.6.1. An AE facility must include surge protection for all incoming conductors. The surge protection must include suppression at the entrance to the facility from each wire to ground. All other metallic utility lines and pipes must be connected electrically to the structural steel of the building just before they enter the AE facility.

V2.E3.6.2. Any conductors, shielded cabling, power cabling, and communication lines must be buried underground in metal conduit for a minimum of 50 ft [15.3 m] before entering an AE facility.

V2.E3.7. HAZARDS OF ELECTROMAGNETIC RADIATION TO ORDNANCE (HERO).

Military munitions containing electrically initiated devices (EIDs) (e.g., exploding foil initiators, laser initiators, burn wires, fusible links, hot bridge wires, carbon bridges, and conductive compositions) must be designed or protected such that electromagnetic radiation (EMR) does not cause an inadvertent initiation, degradation, or disablement. Direct radio frequency (RF)-induced actuation of the EID or electrical coupling to and triggering of the associated firing circuits can occur, especially in a tactical radiated electromagnetic environment (EME).

V2.E3.7.1. Certification of Military Munitions. During acquisition, HERO evaluation and certification of military munitions must be accomplished by the program manager (PM), both for routine employment mission profiles and for any anticipated joint- or combined-operational employment, to include all phases of the life-cycle EMEs identified in paragraph **V2.E3.7.1.2.**

V2.E3.7.1.1. Recertification of Military Munitions. HERO certification must be accomplished by the program or item manager when legacy military munitions are redesigned or before military munitions are employed in an EME for which they were not previously HERO-certified.

V2.E3.7.1.2. Life Cycle EME. At a minimum, HERO certification must involve evaluation without adverse effects to military munitions in an EME relevant to all life cycle configurations. This life cycle is referred to as the stockpile-to-safe-separation sequence and can consist of up to six distinct phases: transportation and storage; assembly and disassembly; handling and loading; staged; platform-loaded; and immediate post-launch.

V2.E3.7.1.3. HERO Database. All data from HERO evaluations must be compiled in a centralized data repository as required by DoDI 3222.03 to support the Service ordnance electromagnetic environmental effects risk assessments for subsequent use in information applications supporting the DoD Components.

V2.E3.7.2. EME Controls. The DoD Components must take measures (e.g., identifying susceptibilities, quantifying EMEs, evaluating risks associated with operating procedures, and establishing tailored emission control instructions) to ensure that HERO effects on military munitions are resolved during the planning of joint or combined operations and training exercises.

V2.E3.8. POSTING OF RF WARNINGS. Areas where the levels of RF electromagnetic fields constitute a radiation hazard to military munitions or to flammable materials located in such areas must be clearly marked with warning signs or labels for mobile emitters.

V2.E3.8.1. HERO Warning Signs. Warning signs must be posted at any location where radar equipment or other possible sources of EMR might create the potential for premature initiation of military munitions. Warning signs must be placed along transportation routes approaching military munitions operations (e.g., missile assembly, ammunition pier) at designated locations. Warning signs should alert operators of mobile or portable emitter systems to a potential hazard and restrictions when using these emitters (e.g., radios, cellular telephones) past the designated point.

V2.E3.8.2. HERO Warning Labels. Warning labels may be affixed to all operated portable or mobile emitter systems to alert the user of the potential hazard if the emitter is operated closer than the prescribed safe separation distance for the military munitions-related operation of concern, where appropriate.

V2.E3.9. RADIO FREQUENCY IDENTIFICATION (RFID)

V2.E3.9.1. The July 30, 2004 USD(AT&L) Memorandum mandates the use of RFID technology. The July 30, 2004 USD(AT&L) Memorandum also mandates that Military Services quantify the mutual effects of the devices with respect to HERO.

V2.E3.9.2. Military Services using electronic equipment that intentionally generates RF energy, either to identify or track military munitions or to use within a military munitions storage or operating facility (e.g., assembly or disassembly, build-up areas), must first evaluate and certify such equipment for use. The certification process must involve comparing the device's radiated emission characteristics to a military munition's potential susceptibility, and determining a safe separation distance.

V2.E3.9.2.1. If the system does not have a HERO impact that requires a safe separation distance for military munitions, the Service certifying agent will issue a HERO certification (unrestricted) to the PM, acquisition manager (AM), or installation activity (IA). The agent will forward a copy of the certification to the Service testing agent and proponent for publications related to the affected military munition.

V2.E3.9.2.2. If the system is determined to have a limited impact that will not impose operational restrictions or diminish the capability of the automatic identification technology (AIT) equipment to be used as intended and requires a safe separation distance for military munitions, the Service certifying agent will issue a HERO certification (with restrictions) to the PM, AM, or IA. The agent will forward a copy of the certification to the Service testing agent and proponent for publications related to the affected military munition.

V2.E3.9.2.3. If the system can adversely affect military munitions to the extent that managing HERO will impose undue operational restrictions or the restrictions (e.g., required safe

separation distances) placed on the system will diminish the capability of the equipment to be used as intended, the Service certifying agent will issue a letter rejecting HERO certification. This letter will also notify the PM, AM, or IA of the need to fix the equipment or, in the case of an operational requirement, request a waiver of the HERO certification requirements. Should the PM choose to fix the AIT equipment, the HERO certification request is reprocessed upon evaluation by the Service testing agent.

VOLUME 2 – ENCLOSURE 4: LIGHTNING PROTECTION

V2.E4.1. CRITERIA. This enclosure provides the minimum explosives safety criteria for the design, installation, inspection, testing, training, and maintenance of LPSs. The DoD has selected the LPS criteria of NFPA 780, as modified in this enclosure and including Annex D (Inspection and Maintenance of Lightning Protection Systems) and Annex E (Ground Measurement Techniques), for use at AE facilities. NFPA 780 will apply regardless of any statements of nonapplicability contained within NFPA 780. Annex criteria will supersede main body criteria.

V2.E4.1. **(Added)(AF)** DoD 3150.02-M, AFI 91-100 series, WSSRs, and AFI 32-1065 provide LPS program guidance for conventional and nuclear weapons facilities and operations.

V2.E4.2. LPS DESIGN AND INSTALLATION. LPSs used to protect DoD AE must be designed and installed using the rolling sphere method with a radius of 100 ft [30.5 m] or less in accordance with Chapter 8 of NFPA 780. All DoD AE facilities must be protected; section 8.1.1 of NFPA 780 does not apply.

V2.E4.2. **(Added)(AF)** In addition to the standards in section **V2.E4.2.**, comply with AFI 32-1065 and UFC 3-575-01. **(T-0).**

V2.E4.2.1. Sideflash Protection. Protection from sideflash caused by lightning must be obtained by either separation distance or bonding in accordance with NFPA 780. Fences, gates, and railroad tracks located within 6 ft [1.9 m] of a structure's LPS must be bonded to the structure's LPS.

V2.E4.2.1.1. **(Added)(AF)** Sideflash Protection for Nuclear Weapons. The Nuclear Weapon System Safety Group adopted a standard sideflash separation distance value of seven feet as a conservative baseline for nuclear safety critical operations. Absent specific additional guidance due to location or weapon configuration, use the 7-foot sideflash separation distance (see paragraph **V2.E4.2.1.1.2.** and Table **V2.E4.T1.**). **(T-1).** When weapons are in an operational configuration with no required lightning sideflash separation distance, apply all other separation distance requirements not specifically related to lightning (e.g., for access, ventilation, inventory, etc.) are still applicable.

Table V2.E4.T1. (Added)(AF) Lightning Sideflash Policy for Nuclear Weapon Configurations.

Weapon	Configuration	Sideflash Policy Requirement
W80, W84, W78, W87	All TO 11N-WXX-1 Configurations[1]	No Separation distance required
B83	TO 11N-B83-1B configuration only[1,2]	Apply separation distance IAW paragraph **V2.E4.2.1.1.**
B61	Major Maintenance[1,3]	Apply separation distance IAW paragraph **V2.E4.2.1.1.**

Notes: **(Added)(AF)**
1. **(Added)(AF)** Maintenance Actions accomplished IAW Special Procedures, Alts or Mods must be reviewed and approved IAW AFI 91-101. Sideflash policy requirements must be determined on a case-by case basis and properly documented via Special Procedures, Alts or Mods.
2. **(Added)(AF)** See TO 11N-B83-1A.
3. **(Added)(AF)** Major Maintenance is any activity where major sub-assemblies are separated.

V2.E4.2.1.1.1. **(Added)(AF)** The sideflash protection requirements for all nuclear weapons, depending on their operational configuration, are listed in Table **V2.E4.T1.** The term "major maintenance" refers to the weapon configuration resulting from the disassembly or the performance of any maintenance operations, as currently approved, which could result in exposure of the weapon's internal components to electrical energy. Major maintenance does not include permissive action link procedures.

V2.E4.2.1.1.2. **(Added)(AF)** Location Considerations for Sideflash Separation Distance.

V2.E4.2.1.1.2.1. **(Added)(AF)** If operations are being performed inside a HAS or a protective aircraft shelter (PAS) and these operations include weapon configurations that require a separation distance (see Table **V2.E4.T1.**), then:

V2.E4.2.1.1.2.1.1. **(Added)(AF)** When using a Secure Transportable Maintenance System (STMS), no minimum sideflash separation distance is required between the STMS and the HAS or PAS during nuclear weapon operations provided all additional safety requirements are met. Follow procedures IAW TO 11N-50-1007, TO 11N-50-1010-1, and maintain separation distance requirements between the weapon and the inside walls of the STMS. (See paragraph **V2.E4.2.1.1.3.** for proper application of separation distance).

V2.E4.2.1.1.2.1.2. **(Added)(AF)** When nuclear weapon handling operations are conducted in a HAS or PAS without a STMS, a minimum sideflash separation distance of seven feet is required between the weapon and the HAS or PAS. See paragraph **V2.E4.2.1.1.3.** for proper application of separation distance.

V2.E4.2.1.1.2.2. **(Added)(AF)** If operations are being performed at any location other than in a HAS or a PAS and these operations include weapon configurations that require a separation distance, then a minimum sideflash separation distance of seven feet is required between the weapon and facility (see paragraph **V2.E4.2.1.1.3.** and Table **V2.E4.T1.** for proper application of separation distance).

V2.E4.2.1.1.2.3. **(Added)(AF)** The standard separation distance of seven feet may be reduced by determining the specific sideflash separation value for a particular facility.

V2.E4.2.1.1.2.3.1. **(Added)(AF)** Sideflash separation distance reduction is based on Faraday shield impedance characterization testing, adequate bonding, and appropriate installation of surge suppression using a methodology approved by AFSEC/SEW prior to implementation.

V2.E4.2.1.1.2.3.2. **(Added)(AF)** Documentation of the bonding and surge suppression configuration, including the associated separation distance calculations, in an attachment to the ESP, must accompany the characterization test results for formal review and approval by AFSEC/SEW before a deviation to the 7-foot standard separation distance is granted. **(T-1).** Changes to the bonding and surge suppression configuration must be submitted to AFSEC/SEW for approval prior to implementation. **(T-1).**

V2.E4.2.1.1.2.3.3. **(Added)(AF)** Faraday shield characterization and implementation methodologies must include specific maintenance and inspection procedures and comply with the following requirements (see AFI 32-1065):

V2.E4.2.1.1.2.3.3.1. **(Added)(AF)** Maintain and inspect the LPS per section **V2.E4.3.**

V2.E4.2.1.1.2.3.3.2. **(Added)(AF)** Conduct resistance measurements per AFI 32-1065. Such measurements are required when the facility is subjected to acts of nature (earthquake, tornado, flood) that could have affected the integrity of the bonds. Measurements are also required for modification, maintenance, penetration, or repair to the structure, or any LPS component requires the bond or connection to be broken.

V2.E4.2.1.1.2.3.3.3. **(Added)(AF)** Maintain records per paragraph V2.E4.3.3. and AFI 32-1065.

V2.E4.2.1.1.2.3.4. **(Added)(AF)** Measures taken to implement a Faraday-like shield do not the requirements to maintain a conventional LPS as described in **Volume 2 – Enclosure 4** and the current version of AFI 32-1065.

V2.E4.2.1.1.3. **(Added)(AF)** The required safe separation distance (SSD) is properly applied to an item (weapon, STMS, etc.) to be protected from lightning sideflash by maintaining a minimum free space separation of the specified distance between the item and the facility's walls, ceiling, or any other structural member capable of conducting electrical energy (e.g., steel columns, rebar-reinforced interior walls, columns or beams).

V2.E4.2.1.1.3.1. **(Added)(AF)** Objects in the floor such as concrete rebar, floor grounds, and structural members of the WSV, when the vault is in a full down position, do not require the application of the sideflash separation distance.

V2.E4.2.1.1.3.2. **(Added)(AF)** If an ungrounded metallic conductor is located within the SSD of the item being protected, then the shortest free space distance measured between the metallic conductor and any structural member capable of conducting electrical energy must be at least equal to the full separation distance (seven-foot default) minus the shortest free space distance measured between the metallic conductor and the item being protected.

V2.E4.2.1.1.3.3. **(Added)(AF)** Transient or temporary infringement of the sideflash separation distance requirement can be permitted. Examples include the movement of personnel through the facility or the requirement to use an overhead crane in the course of approved maintenance procedures. Avoid these actions whenever possible, or minimize their duration while still allowing required maintenance operations to be safely completed. These deviations are not justified by issues of convenience or for the sole purpose of ease of operations.

V2.E4.2.1.1.4. **(Added)(AF)** Deviations from paragraph **V2.E4.2.1.1.** must be approved by AFSEC/SEW (see **Volume 1 – Enclosure 3**). **(T-1).**

V2.E4.2.2. Earth Electrode System. Earth electrode systems dissipate the current from a lightning strike to ground. Earth electrode systems may be concrete-encased electrodes, ground loop conductors, radials, grounding rods, ground plates, a conductor immersed in nearby saltwater, chemical grounds that are installed for the purpose of providing electrical contact with the earth, or combinations of these.

V2.E4.2.3. Surge Protection. Surge protection devices are installed, in accordance with NFPA 780, at all points where electrical or electronic system conductors enter or exit an AE facility.

V2.E4.2.4. Underground Storage Facilities. An underground storage site only requires protection against lightning for exposed or partially exposed parts. Lightning protection requirements are considered on a site-specific basis.

V2.E4.3. INSPECTION, TESTING, RECORDS AND DATA, TRAINING, AND MAINTENANCE

V2.E4.3.1. Visual Inspection. Sections 8.10.6 and 8.10.7 of NFPA 780 do not apply. LPSs must be inspected periodically at a frequency determined by each DoD Component. The maximum interval between LPS visual inspections is 1 year, or an interval determined by a continuously validating statistical model determined by the DoD Component and approved by the DDESB.

V2.E4.3.2. Electrical Tests. LPSs must be tested electrically when placing a new facility into service and after any facility modification that may have affected the system. The maximum interval between LPS electrical testing is 2 years, or an interval determined by a continuously validating statistical model determined by the DoD Component and approved by the DDESB. LPSs are tested in accordance with Annex D of NFPA 780, and must meet the values specified in paragraphs **V2.E4.3.2.1.** and **V2.E4.3.2.2.**

V2.E4.3.2.1. Bonding (Resistance) Tests. A maximum resistance value of 1 ohm is permitted across each bond.

V2.E4.3.2.2. Earth Electrode Tests. The maximum resistance to earth must not exceed 25 ohms. The DoD Components must establish guidance for situations (e.g., lack of top soil, desert conditions) where the maximum resistance cannot be met.

V2.E4.3.2.2. **(Added)(AF)** Refer to AFI 32-1065 for earth electrode test guidance.

V2.E4.3.2.3. Test Equipment. Test instruments must be in good working order and calibrated in accordance with manufacturers' recommendations.

V2.E4.3.3. Records and Data. Records and test measurement data of resistance to earth and bonding tests must be kept on file for the last six inspection cycles.

V2.E4.3.4. Training. Each DoD Component must establish training requirements for personnel conducting LPS maintenance, inspection, and testing for AE facilities.

V2.E4.3.4. **(Added)(AF)** Refer to AFI 32-1065 for training, maintenance, inspections, and test requirements.

V2.E4.3.5. Maintenance. Maintenance must be performed to ensure that the integrity of the LPS conforms with the criteria in NFPA 780. Properly maintained LPSs are required for all AE facilities.

V2.E4.4. LIGHTNING PROTECTION EXCEPTIONS. Paragraphs **V2.E4.4.1.** through **V2.E4.4.6.** supersede section 8.1.3 of NFPA 780. The following are exceptions to the LPS criteria in sections **V2.E4.1.** through **V2.E4.3.**:

V2.E4.4.1. An LPS is not required if all of the conditions in paragraphs **V2.E4.4.1.1.** through **V2.E4.4.1.3.** are met.

V2.E4.4.1.1. Explosives facilities are served by an approved local lightning warning system (as determined by each DoD Component) permitting AE operations to be terminated before a thunderstorm is within 10 miles [16 kilometers] of the installation.

V2.E4.4.1.1.1. **(Added)(AF)** See section **V2.E4.6.**

V2.E4.4.1.2. All personnel are evacuated to a location providing protection equivalent to PTRD based on airblast overpressure only (minimum fragment distances do not apply).

V2.E4.4.1.3. The resulting damage and loss from a lightning strike is acceptable to the DoD Component.

V2.E4.4.1.4. **(Added)(AF)** The following locations do not require an LPS provided that the responsible commander accepts the loss of resources and structure(s), and any potential collateral damage to other nearby exposures. commanders will ensure risk acceptance is documented by letter (i.e., signed by the commander stating they understand and accept the potential loss of resources and structures at the location without LPS and any potential collateral damage to other nearby exposures) and submitted with the ESP. **(T-1).**

V2.E4.4.1.4.1. **(Added)(AF)** Facilities used for temporary (non-recurring) storage of munitions.

V2.E4.4.1.4.2. **(Added)(AF)** Structures, facilities, or mobile equipment housing explosives or explosives operations not regularly situated at a fixed location.

V2.E4.4.1.4.3. **(Added)(AF)** Structures and facilities limited to the storage or handling of small arms ammunition where the value of the ammunition is $10,000 or less.

V2.E4.4.1.4.4. **(Added)(AF)** LPS may be omitted on EOD intentional detonation and proficiency training ranges, and holding areas sited within the range boundary. A commander's risk acceptance memorandum is not required. Apply the requirements set forth in paragraph **V2.E4.4.1.**

V2.E4.4.1.5. **(Added)(AF)** Air terminal systems are not required on a HAS, a PAS, a metal aircraft shelter, or an ECM, provided:

V2.E4.4.1.5.1. **(Added)(AF)** All reinforcing steel is properly bonded and grounded per NFPA 780 and AFI 32-1065.

V2.E4.4.1.5.2. **(Added)(AF)** Exterior metal ventilators comply with NFPA 780 and AFI 32-1065 for bonding, grounding, and air terminal requirements. **(T-0).**

V2.E4.4.1.5.3. **(Added)(AF)** Down conductor, sideflash protection, surge suppression, and earth electrode system requirements of section **V2.E4.2.** are met.

V2.E4.4.1.6. **(Added)(AF)** An LPS is not required for licensed explosives storage locations and for locations involving explosives operations not requiring explosives siting.

V2.E4.4.1.7. **(Added)(AF)** An "integral" LPS is not required for an all-metal building that has been shown to meet the additional criteria of a "metallic cage" system, as defined in NFPA 780.

V2.E4.4.2. An LPS is not required for facilities containing only AE that cannot be initiated by lightning, and where no fire hazard exists, as determined by the DoD Component and approved by the DDESB.

V2.E4.4.3. An LPS is not required for AE facilities where personnel are not expected to sustain injury and any resulting economic loss of the structure, its contents, and surrounding facilities is acceptable to the DoD Component.

V2.E4.4.4. The DoD Components must establish guidance when airfield or flight-line criteria conflicts with LPS requirements.

V2.E4.4.4. **(Added)(AF)** LPS may also be omitted on flightline PESs, if the system interferes with flightline criteria contained in UFC 3-260-01. A commander's risk acceptance is not required. See section **V2.E4.6.** for procedures in the event of electrical storms.

V2.E4.4.5. ECMs that constitute a metallic cage, as defined in Chapter 8 of NFPA 780, and do not contain any energized or unbonded metallic penetrations, do not require earth resistance testing.

V2.E4.4.6. Large catenary systems that cannot conform to the bonding distances calculated from the equations provided in NFPA 780 are considered in accordance with the alternate LPS criteria in section **V2.E4.5.** Engineering analyses must be provided to ensure that variances from NFPA 780 provide equivalent protection. The DoD Components must validate engineering analyses before submitting to DDESB for approval.

V2.E4.5. ALTERNATE LPS. If other LPSs for AE facilities are used, they must offer equivalent protection. The DDESB must approve use of nonstandard lightning protection schemes or nonstandard lightning protection test methods that provide equivalent protection.

V2.E4.6. (ADDED)(AF) PROCEDURES IN THE EVENT OF ELECTRICAL STORMS.

V2.E4.6.1. (Added)(AF) Local Lightning Watch and Warning Support. The servicing AF weather unit will provide lightning watches and warning support to installations allowing units time to take precautionary measures. **(T-1).** Supervisory personnel will consult with the supporting weather unit; review the local weather support plan; ensure watches and warnings provide coverage for their working areas; and become familiar with local notification processes. **(T-1).** In addition, weather personnel will coordinate with all installation organizations to ensure weather requirements are being met, in accordance with AFMAN 15-129V2. **(T-1).**

V2.E4.6.2. (Added)(AF) Procedures in the Event of Lightning for Conventional AE Only. The following guidelines apply when a lightning watch or warning is issued for the base:

V2.E4.6.2.1. **(Added)(AF)** A Lightning Watch will be issued when lightning is forecast to occur in 30 minutes or within 5 nautical miles (nm) radius of the center of the installation airfield, or other coordinated location. **(T-1).** Initiate controlled termination procedures for all explosives operations at outdoor locations equipped with an LPS, at locations (outdoor and indoor) not equipped with an LPS, and facilities containing exposed explosives, explosive dust, or explosive vapor. **(T-1).**

V2.E4.6.2.2. **(Added)(AF)** A Lightning Warning will be issued whenever any lightning is observed within a 5 nm radius of the center of the installation airfield, or other coordinated location. **(T-1).**

V2.E4.6.2.2.1. **(Added)(AF)** Immediately provide personnel protection equivalent to PTR distance from explosives facilities containing exposed explosives, explosive dust, or explosive vapor, regardless of whether the facility is equipped with an LPS; this includes providing protection equivalent to PTR for all locations within the PTR arc. **(T-1).** PTR distances will be based on airblast overpressure only (minimum fragment distances do not apply).

V2.E4.6.2.2.2. **(Added)(AF)** Explosives operations in facilities equipped with an LPS (including HAS or PAS) may continue (except where noted in paragraph **V2.E4.6.2.2.1.**); however, assess the need and urgency for doing so. Cease operations involving EIDs that are uncapped, unplugged, or susceptible to electro-static discharge and vacate the maintenance bay where these operations are located. **(T-1).** Evacuation of the non-maintenance administrative areas is not required.

V2.E4.6.2.2.3. **(Added)(AF)** Immediately provide personnel protection equivalent to PTR distance from explosives locations (indoor and outdoor, to include parked explosives-laden conveyances and flightline PES locations) not having an LPS; this requirement applies to all locations within the PTR arc of a facility without an LPS. **(T-1).** PTR distances will be based on airblast overpressure only (minimum fragment distances do not apply).

V2.E4.6.2.2.4. **(Added)(AF)** When ICBM operations cannot be immediately evacuated, (e.g., due to protection level resources or a transporter-erector being in its upright position and the missile being raised or lowered), use TOs to ensure the safety and security of personnel and weapons. **(T-1).**

V2.E4.6.2.2.5. **(Added)(AF)** Cease all explosives operations at outdoor locations equipped with an LPS and not specifically mentioned in the paragraphs above. **(T-1).**

V2.E4.6.2.2.6. **(Added)(AF)** Sites or explosives operations not requiring an ESP and licensed locations not requiring LPS are excluded from lightning evacuation as described in this paragraph. (See shelter criteria in AFMAN 91-203 for additional lightning response requirements).

V2.E4.6.2.3. **(Added)(AF)** See Volume 2 – Enclosure 4 for additional LPS information.

V2.E4.6.3. (Added)(AF) Procedures in the Event of Lightning for Nuclear Weapons.

V2.E4.6.3.1. **(Added)(AF)** Locations supporting nuclear weapons operations will follow AFI 91-101. **(T-1).**

V2.E4.6.3.2. **(Added)(AF)** See **Volume 2 – Enclosure 4** for additional LPS information.

VOLUME 2 – ENCLOSURE 5: CONSTRUCTION CRITERIA PERMITTING REDUCED SEPARATION DISTANCES

V2.E5.1. GENERAL

V2.E5.1.1. This enclosure contains DoD standards for construction of ECMs, barricades, barricaded open storage modules, special structures, earth-filled, steel bin-type barricades known as ARMCO, Inc. revetments, and underground storage facilities. Facilities constructed in accordance with this enclosure:

V2.E5.1.1.1. May use reduced separation distance criteria.

V2.E5.1.1.2. Must meet the criteria of **Enclosure 3** and **Enclosure 4** of this volume.

V2.E5.1.2. Construction features and location are important safety considerations in planning facilities. Construction features that limit the amount of explosives involved, attenuate blast overpressure or thermal radiation, and reduce the quantity and range of hazardous fragments and debris may alter the effects of potential explosions significantly. Proper location of ESs in relation to PESs helps minimize unacceptable damage and injuries in the event of an incident. The major objectives in facility planning are to:

V2.E5.1.2.1. Protect against explosion propagation between adjacent bays or buildings and death or serious injury to personnel from incidents in adjacent bays or buildings. The construction of separate buildings to limit explosion propagation, rather than the use of either protective construction or separation of explosives within a single building, should be considered when separate buildings would greatly enhance safety or significantly reduce costs.

V2.E5.1.2.2. Protect assets when warranted.

V2.E5.1.3. Protective construction (such as hardening an ES or constructing a PES to suppress explosion effects to provide an appropriate degree of protection) may allow a reduction of the separation distances required by QD tables. The rationale and supporting data that justify any such QD reduction must be submitted to the DDESB with the site and general construction plans for approval, as outlined in section **V1.E5.2.**

V2.E5.1.4. New construction of previously DDESB-approved 7-Bar and 3-Bar (structural strength designations) ECMs must meet the minimum requirements of the current revisions of the approved drawings.

V2.E5.1.5. **(Added)(AF)** Accomplish design of explosion resistant facilities by a party experienced in structural dynamics using professionally-accepted design procedures. UFC 3-340-02 is an appropriate source of effects data and design methods.

V2.E5.1.6. (Added)(AF) Existing, Approved Protective Construction Designs. DDESB TP 15 documents previously approved protective construction designs. An ESP using approved protective construction designs must:

V2.E5.1.6.1. **(Added)(AF)** Reference the DDESB approval memorandum. **(T-1).**

V2.E5.1.6.2. **(Added)(AF)** Identify the design or drawing numbers used, if available. **(T-1).**

V2.E5.1.6.3. **(Added)(AF)** Specify that the protective construction will be used in the same manner as that stated in the references in the DDESB approval memorandum. **(T-1).**

V2.E5.1.6.4. **(Added)(AF)** State that the structural design has not been altered in any manner that impacts the design's integrity or its ability to provide the required level of protection. **(T-1).**

V2.E5.1.6.5. **(Added)(AF)** State that the site specific adaptations of the design have been reviewed and are appropriate for the site conditions. **(T-1).**

V2.E5.1.7. (Added)(AF) Modifications to Previously Approved Protective Construction Designs. For DDESB-approved protective construction design, where a structural aspect of the protective design has been modified by a structural engineer with experience in designing blast resistant structures, the submitting MAJCOM must provide:

V2.E5.1.7.1. **(Added)(AF)** A complete description of the structural modifications made, the reasons for the modifications, and any explosives safety impact resulting from the modifications.

V2.E5.1.7.2. **(Added)(AF)** The basis of design and the explosives safety protection being afforded by the modified design.

V2.E5.1.7.3. **(Added)(AF)** The following protective construction design and MAJCOM review data:

V2.E5.1.7.3.1. **(Added)(AF)** For preliminary DDESB approval, concept structural design drawings that are at least 35 percent complete. For final DDESB approval, the structural design drawings must be at least 60 percent complete, with all protective construction design modifications sufficiently developed for validation.

V2.E5.1.7.3.2. **(Added)(AF)** Design calculations for all critical structural elements.

V2.E5.1.7.3.3. **(Added)(AF)** All applicable electrical, grounding, and LPS details.

V2.E5.1.7.3.4. **(Added)(AF)** Supporting blast analysis, experimental data reports, blast design calculations, and other technical information. Blast analysis and design calculations must satisfy UFC 3-340-02 requirements.

V2.E5.1.7.3.5. **(Added)(AF)** A memorandum from the submitting MAJCOM Civil Engineer, or Air Force Installation and Mission Support Center Detachment Commander, verifying that the protective construction design modifications comply with this manual and UFC 3-340-02 requirements. **(T-0).** Base verification upon a quality control review by a competent DoD blast design agency such as the Naval Facilities Engineering and Expeditionary Warfare Center or the U.S. Army Engineering and Support Center, Huntsville. AFSEC/SEWC will provide appropriate contact information upon request. Because both of these organizations operate on a cost reimbursable basis, projects must arrange payment for these organization's services.

V2.E5.1.8. (Added)(AF) New Protective Construction Designs. For a new protective construction design, the submitting MAJCOM must provide:

V2.E5.1.8.1. **(Added)(AF)** The criteria being met; a complete description of both the design's capabilities and the basis for the design, and the level of explosives safety protection level it affords.

V2.E5.1.8.2. **(Added)(AF)** The protective construction design and MAJCOM review data as stated in paragraph **V2.E5.1.7.3.**

V2.E5.1.8.3. **(Added)(AF)** Once approved, a standard protective construction design can be site-adapted, provided the conditions and limitations of the DDESB approval are met. The DDESB will document new standard approved protective construction designs in DDESB TP 15.

V2.E5.2. SPECIAL STRUCTURES. The DDESB has approved reduced QD for structures and containers listed in Table AP1-4. of DDESB Technical Paper 15.

V2.E5.3. AGMs. There are no DDESB construction criteria for AGM. However, such structures must meet the criteria of Enclosures **3** and **4** of this volume.

V2.E5.4. BARRICADES

V2.E5.4.1. General

V2.E5.4.1.1. Properly constructed and sited barricades and undisturbed natural earth have explosives safety applications for protecting against low-angle fragments and reducing shock overpressure loads very near the barricade. Barricades provide no protection against high-angle fragments or lobbed AE. If the barricade is destroyed in the process of providing protection, then secondary fragments from the destroyed barricade must also be considered as part of a hazards analysis.

V2.E5.4.1.2. To reduce hazards from high-velocity, low-angle fragments, the barricade must be placed between the PES and the ES so that the fragments of concern impact the barricade before the ES. The barricade must be thick enough to reduce fragment velocities to acceptable levels and high enough to intercept the ballistic trajectories of the fragments of concern.

V2.E5.4.1.3. A barricade placed between a PES and an ES interrupts the direct line-of-sight motion of the shock wave. If the barricade has sufficient dimensions and is located close enough to the ES, there may be significant reductions in shock loading to selected areas of the ES.

V2.E5.4.1.4. **(Added)(AF)** Barricades around the ES can be used to reduce minimum separations required by Table **V3.E3.T17.** or fragment distances from 1.2 munitions. Do so if tests or engineering analysis show the barrier will stop the low-angle, high-velocity fragments, and the building will provide protection from the high-angle fragments expected from the PES. The distance cannot be reduced below that required to provide adequate overpressure protection to the ES.

V2.E5.4.1.5. **(Added)(AF)** A secondary barricade at sites of mission-essential equipment and personnel (such as wing communications and trim pads) can provide some additional protection; however, high-angle, low-velocity fragments will still impact the ES.

V2.E5.4.1.6. **(Added)(AF)** Barricades meeting the requirements of paragraph **V2.E5.4.3.2.** may be modified by substituting a retaining wall for the slope on one side. The slope and thickness of the retaining wall (preferably of concrete) must ensure a wide enough top to hold the earth firmly in place.

V2.E5.4.2. Barricade Designs

V2.E5.4.2.1. DDESB-Approved Designs. Chapter 6 of DDESB Technical Paper 15 lists DDESB-approved designs and construction materials for barricades. Use of these designs and materials satisfies barricading criteria.

V2.E5.4.2.2. Alternate Barricade Designs. Alternate barricade designs (e.g., earth-filled steel bins) may be approved by the DDESB, provided that testing or analysis demonstrates their effectiveness in stopping high-velocity, low-angle fragments.

V2.E5.4.2.3. Barricade Size and Orientation to Prevent Prompt Propagation Due to High-Velocity, Low-Angle Fragments. The location, height, and length of a barricade to prevent prompt propagation due to high-velocity, low-angle fragments are determined in paragraphs **V2.E5.4.2.3.1.** through **V2.E5.4.2.3.3.**

V2.E5.4.2.3.1. Location. The barricade may be placed anywhere between the PES and the ES; however, placing it closer to either the PES or ES will provide slightly greater asset protection. For AE stacks of different height (elevation), the location determines the barricade's required height.

V2.E5.4.2.3.2. Height. To determine the required barricade height:

V2.E5.4.2.3.2.1. Establish a reference point at the top of the far edge of one of the two AE stacks between which the barricade is to be constructed. When both stacks are of equal height, the reference point may be established on either stack. If the tops of the two stacks are not of equal height (elevation), the reference point must be on the top of the lower stack, as

shown in Figure **V2.E5.F1.** To preclude building excessively high barricades between AE stacks of different height (elevation), the barricade should be located as close as possible to the lower stack.

V2.E5.4.2.3.2.2. Draw a line from the reference point to the highest point of the other stack. This line is the line-of-sight.

V2.E5.4.2.3.2.3. The barricade's height must be such that the entire width of the barricade crest is at least one ft [0.3 m] above the line-of-sight, as established in paragraph **V2.E5.4.2.3.2.2.** The barricade height must be measured at the time of construction and at intervals throughout the life of the barricade to ensure that the specified thickness and height of the barricade are maintained. If the specified thickness and height of the barricade are not maintained, the AE stack height must be reduced as necessary or the AE stacks must be sited again appropriately. Consideration should be given to making the barricade higher than required for safety purposes to account for accuracy of storage practices regarding AE stack heights, potential mission changes (requiring higher AE stacks), and barricade settling, erosion, etc., that could seriously degrade AE storage capability.

V2.E5.4.2.3.2.4. Where there is no acceptor stack at the ES, the height of the barricade is determined using the height of the highest personnel location (e.g., 6 ft [1.9 m] from highest personnel floor in ES) in place of the height of the acceptor stack in paragraphs **V2.E5.4.2.3.2.1.** through **V2.E5.4.2.3.2.3.**

V2.E5.4.2.3.3. Length. The barricade's length is determined in accordance with Figure **V2.E5.F1.**

V2.E5.4.2.4. Barricade Size and Orientation for Protection Against Overpressure. General procedures to predict pressure mitigation versus barricade design and location have not been developed. However, based on direct-experimental work, the overpressure loading on a surface area shielded by a barricade is reduced by approximately 50 percent when these conditions are met:

V2.E5.4.2.4.1. Location. The barricade's standoff distance is within two barricade heights of the protected area.

V2.E5.4.2.4.2. Height. The top of the barricade is at least as high as the top of the protected area.

V2.E5.4.2.4.3. Length. The length of the barricade is at least two times the length of the protected area.

Figure V2.E5.F1. Determination of Barricade Length and Height to Prevent Prompt Propagation Due to High-Velocity, Low-Angle Fragments[a]

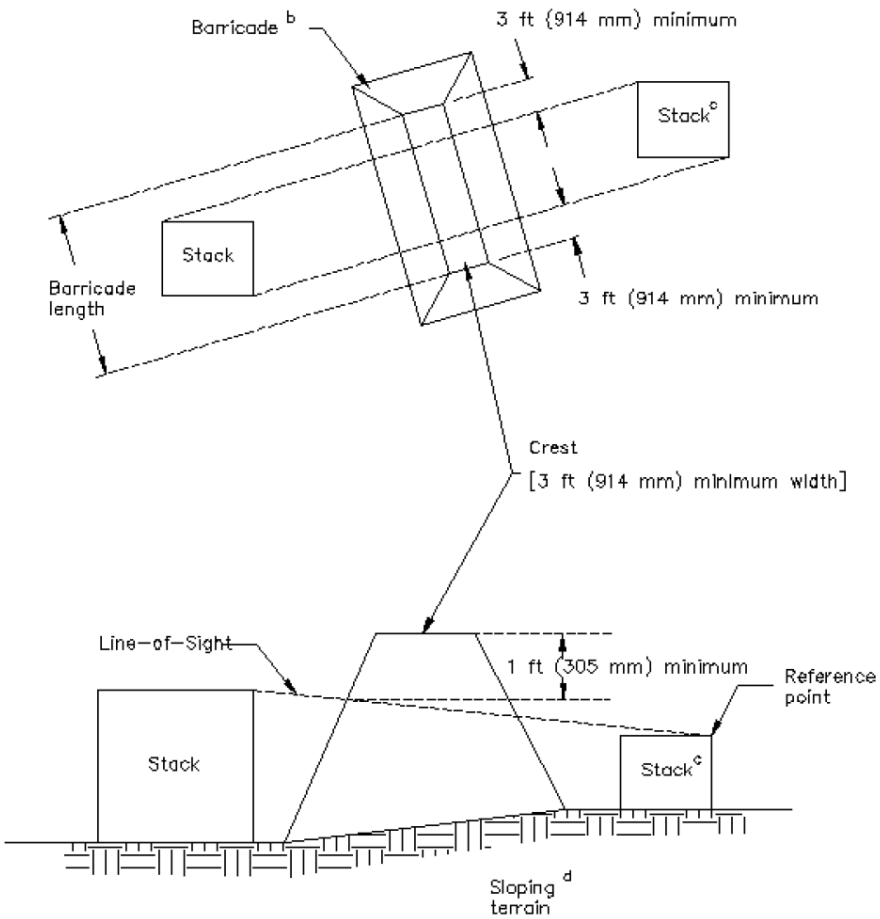

[a] See paragraph V2.E5.4.2.3.
[b] Barricade must meet construction and siting criteria of section V2.E5.4.
[c] See paragraph V2.E5.4.2.3.2.4.
[d] This illustration is for sloping terrain; however, a similar approach is used for level terrain.

V2.E5.4.3. Barricade Construction Materials

V2.E5.4.3.1. Materials for earthen barricades must be reasonably cohesive and free from harmful or toxic matter, trash, debris, and stones heavier than 10 pounds (lbs) [4.54 kilograms (kg)] or larger than 6 inches [152 millimeters (mm)] in diameter. The larger of acceptable stones must be limited to the lower center of fills. Earthen material must be compacted and prepared, as necessary, for structural integrity and erosion control. Solid or wet clay or similar types of soil must not be used in barricades because they are too cohesive. If it is impossible to use a

cohesive material (e.g., in sandy soil), the barricade must be finished with a suitable material (e.g., geotextiles, gunnite) that does not produce hazardous debris but ensures structural integrity.

V2.E5.4.3.2. The slope of an earthen barricade must be two horizontal to one vertical, unless erosion controls are used. Earthen barricades with slopes no greater than one and one half horizontal to one vertical that were approved before 1976 may continue to be used. However, renovations to these facilities must meet the two horizontal to one vertical slope criteria when feasible.

V2.E5.4.4. Portal Barricades for Underground Storage Facilities. Portal barricades allow reduction in IBD for underground magazines. Criteria for the location and construction of portal barricades are illustrated in Figure **V2.E5.F2.** and include:

V2.E5.4.4.1. Location. Portal barricades for entrances or exits must be located immediately in front of an outside entrance or exit to a tunnel leading to an explosives storage point. The portal barricade should be centered on the extended axis of the tunnel that passes through the portal and must be located a distance of not less than one and not more than three tunnel widths from the portal. The actual distance should be no greater than that required to allow passage of any vehicles or materials-handling equipment that may need to enter the tunnel, based on the turning radius and operating width of the vehicles or equipment.

V2.E5.4.4.2. Height. The height of the barricade, along its entire width, must be sufficient to intercept an angle of 10 degrees above the extended height of the tunnel.

V2.E5.4.4.3. Width and Length

V2.E5.4.4.3.1. The width of the central face typically equals the width of the tunnel at the portal.

V2.E5.4.4.3.2. The front face (i.e., the face toward the entry or exit) must be vertical and concave in plan view, consisting of a central face oriented perpendicular to the tunnel axis and wing walls.

V2.E5.4.4.3.3. The wing walls must be of sufficient width so that the entire barricade length intercepts an angle of 10 degrees (minimum) to the right and left of the extended tunnel width.

V2.E5.4.4.4. Construction. To withstand the impact of debris ejected from the tunnel, the front face (including wing walls) must be constructed of reinforced concrete, with a minimum thickness equal to 10 percent of the barricade height, but in no case less than 12 inches [30.5 centimeter]. The concrete wall must have a spread footing of sufficient width to prevent significant settlement. In addition, the central wall, wing walls, and footing must be structurally tied together to provide stability. The backfill behind the concrete wall may be composed of any fill material, to include rock rubble from the tunnel excavation, with a maximum particle size of 6 inches [15.2 centimeter] within the area extending out to 3 ft [0.9 m] from the rear face of the wall.

Figure V2.E5.F2. Portal Barricade Location, Height, and Width[a]

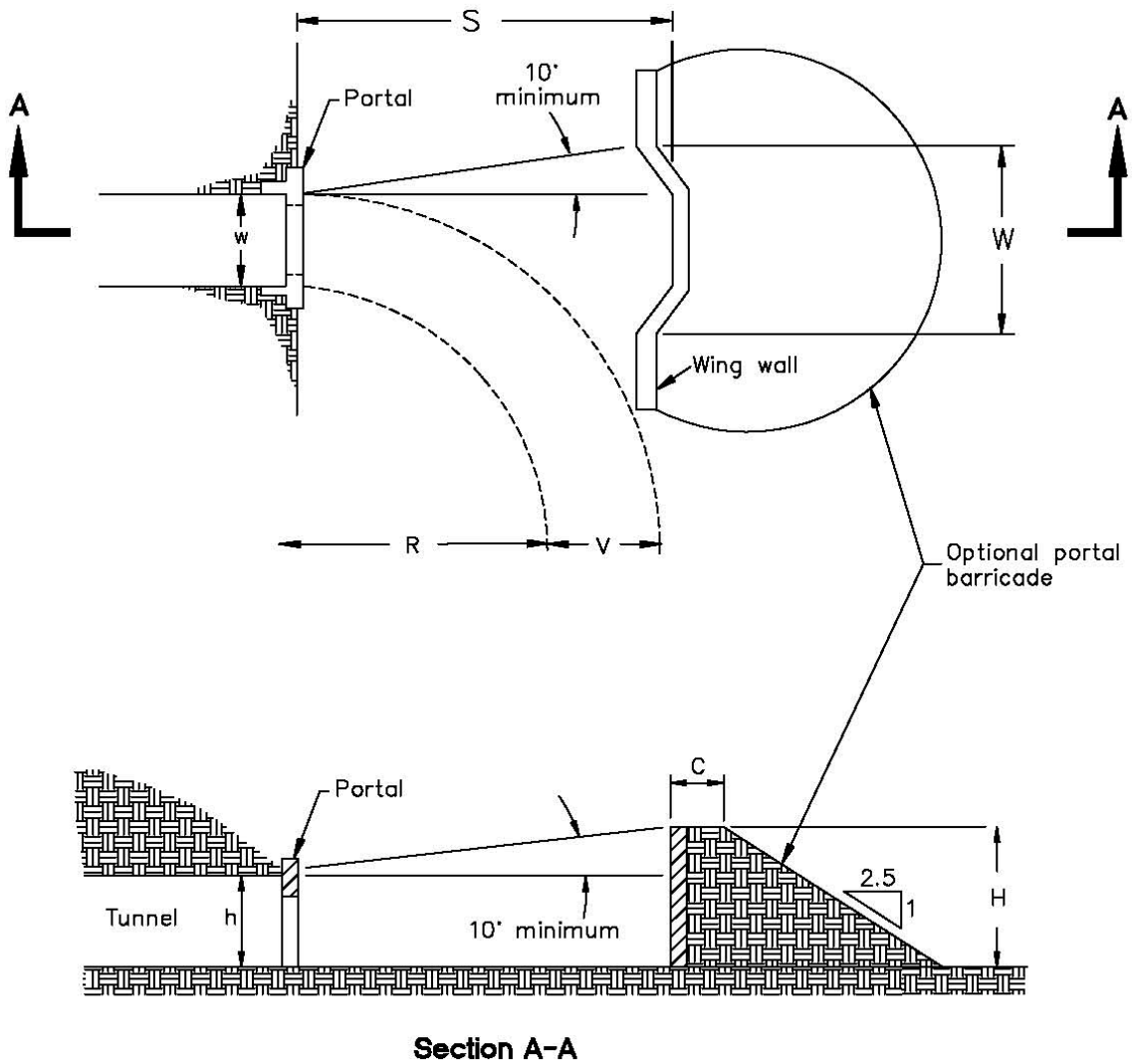

[a] See paragraph **V2.E5.4.4.**

S = Barricade standoff distance from portal
W = Width of barricade (excluding wing walls)
H = Height of barricade
V = Width of munitions transport vehicles
R = Turning radius of munitions transport vehicles
C = Crest width
w = Tunnel width at portal
h = Height of tunnel

V2.E5.4.5. Earth-filled, Steel Bin-type Barricades (ARMCO, Inc. Revetments or Equivalent) for Outside Storage

V2.E5.4.5.1. These barricades are earth-filled steel bins used to separate AE awaiting scheduled processing (e.g., AE on a flight line associated with aircraft parking or loading

operations or AE temporarily positioned and awaiting transfer to preferred, long-term storage). These barricades, which are also used to separate explosive-loaded aircraft, are normally used to form a series of cells. They are designed to limit the MCE, for QD siting purposes, of AE properly positioned in separate cells by preventing prompt detonation transfer to adjacent cells. See paragraph C6.2.7.3. of DDESB Technical Paper 15 for background information on these barricades.

V2.E5.4.5.2. ARMCO, Inc. revetment cells have the following limitations:

V2.E5.4.5.2.1. ARMCO, Inc. revetment cells are approved for storage of any HD 1.1 and HD 1.2 AE assigned to SGs 1 through 4, as discussed in paragraph **V1.E6.2.3.** Storage of HD 1.3, HD 1.4, or HD 1.6 items also is approved.

V2.E5.4.5.2.2. When properly sited, these cells prevent prompt detonation transfer; however, all assets in the series of cells are at risk of loss. Although a revetment is effective in limiting the blast loading of an adjacent ES to that produced by the largest contents of a single cell, there is a significant probability that the contents of many of the cells will be damaged or destroyed by the initial and subsequent fire and explosion events. The extent of such losses increases with the amount of explosives present.

V2.E5.4.5.3. There are two types of ARMCO, Inc. revetments.

V2.E5.4.5.3.1. Type A revetments, which must be a minimum of 7 ft [2.1 m] thick, can be used to limit the MCE in a series of cells to the largest quantity in a single cell, provided the quantity in the single cell does not exceed 30,000 lbs NEW [13,608 kg NEQ].

V2.E5.4.5.3.2. Type B revetments, which must be a minimum of 5.25 ft [1.6 m] thick, can be similarly used to limit the MCE, provided no cell contains more than 5,000 lbs NEW [2,268 kg NEQ].

V2.E5.4.5.4. For ARMCO, Inc. revetments to be used effectively, they must meet certain conditions:

V2.E5.4.5.4.1. The criteria shown in Figure **V2.E5.F1.** are applied.

V2.E5.4.5.4.2. AE is positioned no closer than 10 ft [3.1 m] from cell walls, no closer than 3 ft [0.9 m] from the end of the wing walls, and no higher than 2 ft [0.6 m] below the top of cell walls.

V2.E5.4.5.4.3. AE is distributed over the available area within the cell, rather than being concentrated in a small area.

V2.E5.4.5.4.4. AE stored in a cell in quantities near the maximum NEW limit is not configured into a single row of pallets, stacks, or trailers.

V2.E5.4.5.4.5. The storage of AE in flammable outer-pack configurations is minimized.

V2.E5.4.6. (Added)(AF) Natural Barricades. Natural barricades (e.g., hills) meeting the requirements of this section are acceptable as barricades. Submit information in the ESP to demonstrate compliance with barricade design requirements, and include topographical maps of the terrain.

V2.E5.4.7. (Added)(AF) Inspection of Barricades. Inspect barricades at least annually to determine the degree of settling or erosion. MAJCOMs may require more frequent inspection based on environmental conditions. Barricades finished with a suitable material (e.g., geotextiles, gunite, asphalt) do not require a depth check provided there are no signs of the earth fill washing out from underneath. Add fill if a barricade has deteriorated and it no longer provides effective protection. Also, inspect wood riveted barricades and replace rotten timbers or planking. Maintain barricades so as to prevent erosion or fire hazards. See paragraph **V2.E5.5.3.3.** for ECM inspections.

V2.E5.4.8. (Added)(AF) Substantial Dividing Walls. Contact AFSEC for design requirements for SDW; see DDESB TP 15.

V2.E5.5. ECM. An ECM's primary purpose is to protect AE. To qualify for the default IMD in Table **V3.E3.T6.**, an ECM, acting as an ES, must not collapse. Although substantial permanent deformation of the ECM may occur, sufficient space should be provided to prevent the deformed structure or its doors from striking the contents.

V2.E5.5.1. ECMs may be approved for storage of up to 500,000 lbs NEW [226,795 kg NEQ] of HD 1.1 in accordance with Table **V3.E3.T6.** DDESB Technical Paper 15 provides listings of the various types of ECMs that have been constructed. These magazines are identified by their structural strength designator (i.e., 7-Bar, 3-Bar, or undefined). Table AP1-1. of DDESB Technical Paper 15 lists the 7-Bar and 3-Bar ECM designs that are currently approved for new construction.

V2.E5.5.1.1. If an ECM's drawing number(s) is not listed in DDESB Technical Paper 15, it is treated as an undefined ECM until a structural analysis is performed to show that the ECM qualifies for another structural strength designation, or support documentation is provided to prove the ECM had been approved by the DDESB with a different structural strength designation.

V2.E5.5.1.2. For existing, arch-shaped undefined ECMs, U.S. Army Corps of Engineers (USACE) Report HNC-EDC-S-13-10 may be used to determine if an undefined ECM could qualify as a 7-Bar or a 3-Bar ECM.

V2.E5.5.1.3. DDESB approval is required before any change in an ECM's structural strength designator.

V2.E5.5.1.4. Certain ECMs, AGMs, and containers have been approved with reduced NEWs or reduced QDs, and these are listed in Table AP1-4. of DDESB Technical Paper 15. Use and siting of these structures or containers must meet all conditions and restrictions specified in the design and approval documentation, as described in DDESB Technical Paper 15.

V2.E5.5.2. ECMs must be designed to withstand:

V2.E5.5.2.1. Conventional (e.g., live, dead, snow) loads for the barrel of an arch-shaped ECM.

V2.E5.5.2.2. Conventional (e.g., live, dead, snow) and blast-induced loads for the roof of a flat-roofed ECM.

V2.E5.5.2.3. Conventional (e.g., live, dead, snow) loads for the rear wall of an arch-shaped ECM and the rear and side walls of a flat-roofed ECM.

V2.E5.5.2.4. Expected blast loads, as applicable:

V2.E5.5.2.4.1. On the head wall and door of 3-Bar ES ECMs is a triangular pulse with peak overpressure of 43.5 pounds per square inch (psi) [3 bars, 300 kPa] and impulse of $11.3W^{1/3}$ psi-milliseconds (psi-ms) [100 NEQ in kg $(Q)^{1/3}$ pascal-seconds (Pa-s)].

V2.E5.5.2.4.2. On the head wall and door of 7-Bar ES ECMs is a triangular pulse with peak overpressure of 101.5 psi [7 bars, 700 kPa] and impulse of $13.9W^{1/3}$ psi-ms [$123Q^{1/3}$ Pa-s].

V2.E5.5.2.4.3. On the roof of a flat-roofed undefined, 3-Bar, or 7-Bar ES ECM is a triangular pulse with peak overpressure of 108 psi [7.5 bars, 745 kPa] and impulse of $19W^{1/3}$ psi-ms [$170Q^{1/3}$ Pa-s].

V2.E5.5.3. Earth cover for ECMs must meet certain requirements:

V2.E5.5.3.1. It must be reasonably cohesive and free from harmful or toxic matter, trash, debris, and stones heavier than 10 lbs [4.54 kg] or larger than 6 inches [152 mm] in diameter. Solid or wet clay or similar types of soil must not be used as earth cover because they are too cohesive. The larger of acceptable stones must be limited to the lower center of fills and must not be used for earth cover over magazines. The earthen material must be compacted and prepared, as necessary, for structural integrity and erosion control. If it is impossible to use a cohesive material (e.g., in sandy soil), the earth cover over ECMs must be finished with a suitable material (e.g., geotextiles, gunnite) that will ensure structural integrity.

V2.E5.5.3.1. **(Added)(AF)** The important consideration for these materials is that they pulverize in the event of an accidental explosion. A mixture combined with straw, bark, or comparable material would be suitable. Wire mesh may be used in the finishing material. Aggregate may not be added to the finishing material. Consider means of validating earth cover

depth as part of the design of the finishing material. Reference TM 5-630 for further information.

V2.E5.5.3.2. The earth fill or earth cover between ECMs may be either solid or sloped. A minimum of 2 ft [0.61 m] of earth cover must be maintained over the top of each ECM. If the specified thickness and slope of earth on the ECM is not maintained, the ECM must be sited as an AGM.

V2.E5.5.3.3. **(Added)(AF)** Annually check the depth of the earth cover on ECMs to ensure it is at least two feet. **(T-1).** MAJCOMs may require more frequent inspections based on environmental conditions. ECMs with a suitable material finish (e.g., geotextiles, gunite, asphalt) do not require a depth check provided there are no signs of the earth cover washing out from underneath. If the earth cover erodes to less than two feet, repair as soon as practical (not to exceed 90 days) or classify as an above-ground magazine. Barricaded above-ground magazine criteria may be used if the remaining earth cover meets the barricade criteria of section **V2.E5.4.**

V2.E5.5.3.4. **(Added)(AF)** Select vegetation for ECM so that their weight or root system will not damage the structure.

V2.E5.6. BARRICADED OPEN STORAGE MODULES

V2.E5.6.1. As depicted in Figure **V2.E5.F3.**, a module is a barricaded area composed of a series of connected cells with hard surface (e.g., concrete, packed earth, engineered materials) storage pads separated from each other by barricades. Although a light metal shed or other lightweight fire retardant cover may be used for weather protection for individual cells, heavy structures (e.g., reinforced concrete, dense masonry units) or flammable material must not be used.

V2.E5.6.2. The maximum NEW [NEQ] permitted to be stored within each cell is 250,000 lbs [113,398 kg].

V2.E5.6.3. Module storage is considered a temporary expedient and may be used as the DoD Component concerned determines necessary. However, from an explosives safety and reliability standpoint, priority is given to the use of ECMs for items requiring protection from the elements, long-term storage, or high-security protection.

Figure V2.E5.F3. Typical Eight-Cell Open Storage Module[a,b]

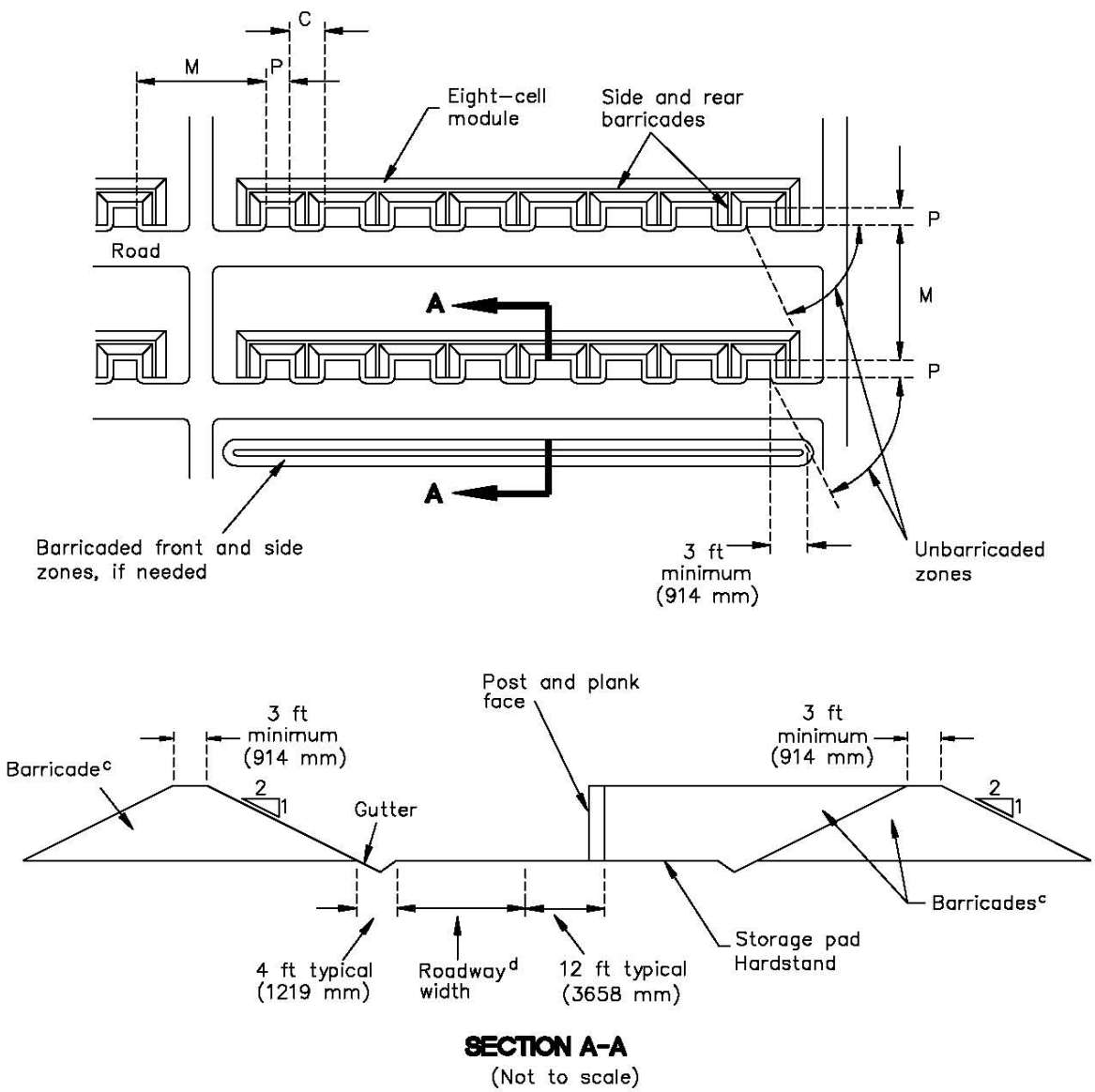

[a] See section **V2.E5.6.**
[b] Number of cells, cells' NEWQD, pad size (P), distance between cells (C) and modules (M), and minimum barricade heights can vary. (See Table **V2.E5.T1.**)
[c] Refer to section **V2.E5.4.** for barricade design criteria and alternate barricade designs.
[d] Roadway width determined by the DoD Components.

V2.E5.6.4. Storage must be limited to AE that will not promptly propagate explosions or mass fire between modules, and that are not susceptible to firebrands and fireballs. These

restrictions allow storage at K-factor (English system) (K)1.1 [K-factor (metric system) (K_m) 0.44] separation between cells.

V2.E5.6.4. **(Added)(AF)** IM distance for HD 1.2.x. and 1.4 for module to module separation is based on total NEWQD. MCE is not used to calculate IM distance between modules.

V2.E5.6.4.1. Only the following AE are approved for modular storage:

V2.E5.6.4.1.1. High-explosive bombs (fuzed or unfuzed, with or without fins) and similarly cased HD 1.1 AE when stored on nonflammable pallets.

V2.E5.6.4.1.2. The following items, when contained in nonflammable shipping containers:

V2.E5.6.4.1.2.1. 30 mm and smaller AE.

V2.E5.6.4.1.2.2. Cluster bomb units.

V2.E5.6.4.1.2.3. Inert AE components.

V2.E5.6.4.1.2.4. HD 1.4 AE.

V2.E5.6.4.2. Module storage of AE items in flammable outer-packaging configurations must be minimized. AE items in flammable outer-packaging configurations must be covered with fire retardant material. Combustible dunnage or other flammable material must not be stored either in or within 100 ft [30.5 m] of modules.

V2.E5.6.4.3. When fire retardant materials are used to cover AE items stored in modules, ventilation must be provided between the covers and the stored AE items to minimize the effects of solar heating upon the AE.

V2.E5.6.4.4. AE stored in each module normally must be limited to one type of item, unless the DoD Component concerned authorizes mixed storage.

V2.E5.6.4.4.1. **(Added)(AF)** The MAJCOM/SEW is the approval authority for mixed storage. **(T-2).** Mixed storage of HE bombs and CBUs present an extreme fragment hazard and must be avoided.

V2.E5.6.5. Barricade requirements:

V2.E5.6.5.1. All barricades used in forming the module must meet the requirements in section **V2.E5.4.** The width or length of the stack of AE (controlled by the pad size of the cell) and the distances between the stack and the top of the barricade influences the minimum barricade height requirement. The heights listed in Table **V2.E5.T1.** are the minimum requirements for barricade locations and are based upon the storage pad sizes and the separations shown. When feasible, barricade heights should be increased.

V2.E5.6.5.2. The centerlines of barricades between cells of the module must be located at a point halfway between adjacent AE storage pads. Back and end (outside) barricades must be located at the same distance from the pads as those between the cells.

Table V2.E5.T1. HD 1.1 IMD for Barricaded Open Storage Module

NEWQD	Minimum Pad-to-Pad Separation Distance ("C" and "M" in Figure **V2.E5.F3.**)[a, b]	Maximum Pad Dimension ("P" in Figure **V2.E5.F3.**) Width or Depth	Minimum Height Above Top of Stack[c]
(lbs)	(ft)	(ft)	(ft)
[kg]	*[m]*	*[m]*	*[m]*
50,000	41	30	2
22,680	*12.5*	*9.1*	*0.6*
70,000	45	30	2
31,751	*13.9*	*9.1*	*0.6*
100,000	51	30	2
45,359	*15.7*	*9.1*	*0.6*
150,000	58	30	2
68,039	*18.0*	*9.1*	*0.6*
200,000	64	30	2
90,718	*19.8*	*9.1*	*0.6*
200,000	64	40	2.5
90,718	*19.8*	*12.2*	*0.8*
250,000	69	40	2.5
113,398	*21.3*	*12.2*	*0.8*
250,000	69	50	3
113,398	*21.3*	*15.2*	*0.9*

a	English equations (EQNs) (weight (W) in lbs, distance (D) in ft) $D = 1.1W^{1/3}$ EQN V2.E5.T1-1 $W = D^3/1.33$ EQN V2.E5.T1-2 *Metric EQNs (Q in kg, D in m)* *$D = 0.44Q^{1/3}$ where D is in m and Q is in kg* *EQN V2.E5.T1-3* *$Q = D^3/0.083$ where Q is in kg and D is in m* *EQN V2.E5.T1-4*
b	AE must not be stored beyond the boundaries of the storage pad.
c	Barricade height is based upon storage pad size. When "P" exceeds 50 ft [15.2 m], then the barricade height must be increased by 6 inches [152 mm] for each 10 ft [3.05 m] increase of "P."

V2.E5.6.5.3. When selecting a site for a module, maximum advantage should be taken of natural topographical barriers. When used, natural barriers must provide the same level of protection as the barricade shown in Figure **V2.E5.F3.**

V2.E5.6.6. Table **V2.E5.T1.** provides the minimum pad sizes necessary to store the NEWQD indicated. The pad's size may need to be adjusted to accommodate specific AE. This adjustment will impact the required barricade height, as indicated in Footnote b of Table **V2.E5.T1.**

V2.E5.6.7. The only restriction on the arrangement of cells within a module and of groups of modules is that cell openings may not face each other, unless they are either barricaded or meet QD criteria for an unbarricaded AGM, as required in Table **V3.E3.T6.**

V2.E5.7. HPMS. HPMs allow a reduction in encumbered land by limiting the MCE to a quantity considerably less than that stored in the HPM. HPMs must be constructed in accordance with Naval Facilities Engineering Command guidance, as outlined in Table AP1-1. of DDESB Technical Paper 15, and sited at the IMD provided by Table **V3.E3.T6.** HPM separation walls protect against fire propagation between internal storage areas. Although IMD provides nearly complete asset protection between HPMs (MCE = 60,000 lbs [27,216 kg] maximum), AE damage may occur to about K9 [K_m 3.57] from a donor NEW > 350,000 lbs [158,757 kg].

V2.E5.8. UNDERGROUND STORAGE FACILITIES

V2.E5.8.1. General Design Considerations

V2.E5.8.1.1. Underground storage facilities may consist of a single chamber or a series of connected chambers and other protective construction features. The chambers may be either excavated or natural geological cavities. Figure **V2.E5.F4.** shows the layout of several typical underground facilities. To qualify as an underground facility, the minimum distance from the perimeter of a storage area to an exterior surface must be greater than 0.25 $W^{1/3}$ [0.10 $Q^{1/3}$]. This minimum distance normally, but not always, equals the thickness of the earth cover. If this criterion cannot be met, the facility must be sited as an AGM.

V2.E5.8.1.2. Design of new underground storage facilities must take into account site conditions, storage requirements, and operational needs. Once these are established, a design may be developed based on the USACE definitive drawing, DEF 421-80-04, discussed in Chapter 5 of DDESB Technical Paper 15. Special features (e.g., debris traps, expansion chambers, closure blocks, portal barricades, and constrictions) may be incorporated in the design of underground storage facilities to reduce the IBD for debris and airblast. The specifications for these special features are given in USACE definitive drawing, DEF 421-80-04, and their effects are discussed in paragraphs **V2.E5.8.2.** through **V2.E5.8.5.**

V2.E5.8.2. Debris Mitigation. Debris IBD may be reduced through the use of debris traps, expansion chambers, high-pressure closures, and portal barricades. Use of barricades with any of the features addressed in paragraphs **V2.E5.8.2.1.** through **V2.E5.8.2.4.** will lower the debris hazard to a level where QD considerations for debris are not required.

Figure V2.E5.F4. Typical Underground Storage Facilities[a]

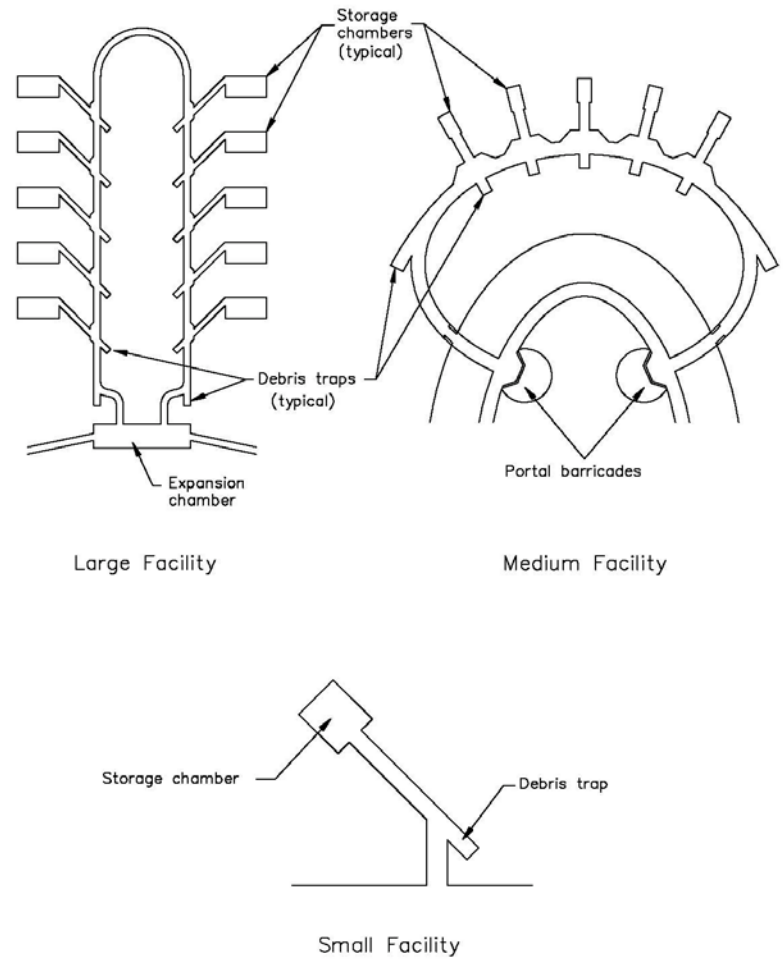

[a] See section **V2.E5.8.**

V2.E5.8.2.1. Debris Traps. Debris traps are pockets excavated in the rock at or beyond the end of sections of tunnel that are designed to catch debris from a storage chamber detonation. Debris traps should be at least 20 percent wider and 10 percent taller than the tunnel leading to the trap, with a depth (measured along the shortest wall) of at least one tunnel diameter. To be effective, debris traps must be designed to contain the full potential volume of debris, based on the maximum capacity of the largest storage chamber.

V2.E5.8.2.2. Expansion Chambers. Expansion chambers are very effective in entrapping debris, as long as the tunnels entering and exiting the chambers are offset in axial alignment by at least two tunnel widths, or enter and exit the chambers in directions that differ by at least 45 degrees. To be effective, expansion chambers that are intended to entrap debris must be designed to contain the full potential volume of debris, based on the maximum capacity of the largest storage chamber.

V2.E5.8.2.3. Portal Barricades. Portal barricades provide a means of reducing IBD from debris by obstructing the path of the debris as it exits the tunnel.

V2.E5.8.2.4. High-Pressure Closures. High-pressure closures are large blocks constructed of concrete or other materials that can obstruct or greatly reduce the flow of blast effects and debris from an explosion from or into a storage chamber. For chamber loading density (w) of about 0.625 lb/cubic feet (ft^3) [10 kg/cubic meter (m^3)] or above, closure blocks will contain 40 percent or more of the explosion debris within the detonation chamber, provided that the block is designed to remain intact. If a closure block fails under the blast load, it will produce a volume of debris in addition to that from the chamber itself. However, because the block's mass and inertia are sufficient to greatly reduce the velocity of the primary debris, the effectiveness of other debris-mitigating features (e.g., debris traps, expansion chambers, and barricades) is increased.

V2.E5.8.3. Airblast Mitigation. Special features that may be used in underground storage facilities to reduce airblast IBD include:

V2.E5.8.3.1. Facility Layouts. A facility's layout and its volume control the external airblast effects.

V2.E5.8.3.1.1. In a single-chamber facility with a straight access tunnel leading from the chamber to the portal (i.e., a "shotgun" magazine), the blast and debris are channeled to the external area as if fired from a long-barreled gun. In this type of facility design, airblast mitigation, given a fixed NEWQD, can be provided by increased chamber and tunnel dimensions.

V2.E5.8.3.1.2. In more complex facility layouts, reflections of the explosive shock against the various tunnel walls may reduce the exit pressures. The cumulative effects of these reflections may reduce the overpressure at the shock front to that of the expanding gas pressure. In addition, the detonation gas pressure decreases as the volume it occupies increases. Therefore, larger, more complex facilities will produce greater reductions in the effective overpressure at the opening, which will reduce the IBD.

V2.E5.8.3.1.3. In a more complex facility with two or more openings, the IBD will be reduced by about 10 percent.

V2.E5.8.3.2. Expansion Chambers. Expansion chambers provide additional volume for the expansion of the detonation gases behind the shock front as it enters the chamber from a connecting tunnel. Some additional reduction of the peak pressure at the shock front occurs as the front expands into the expansion chamber and reflects from the walls. Although expansion chambers may be used as loading areas or as turn-around areas for transport vehicles servicing facilities through a single entry passage, they must not be used for storage.

V2.E5.8.3.3. Constrictions. Constrictions are short lengths of tunnel with cross-sectional areas reduced to one-half or less of the normal tunnel cross-section. Constrictions reduce the airblast effects passing through them. To be effective, constrictions should be placed within five

tunnel diameters of the tunnel exit or at the entrances of storage chambers. As an added benefit, constrictions at chamber entrances also reduce the total loading on any blast doors installed to protect a chamber's contents.

V2.E5.8.3.4. Portal Barricades. A barricade in front of the portal (entrance into tunnel) will reflect that portion of the shock wave moving directly outward from the portal, thereby reducing the pressures along the extended tunnel axis and increasing the pressures in the opposite direction. The result is a more circular IBD area centered at the portal. A portal barricade meeting the construction criteria of the USACE definitive drawing discussed in paragraph **V2.E5.8.1.2.** will reduce the IBD along the extended tunnel axis by 50 percent. The total IBD area is only slightly reduced, but will change to a circular area, half of which is behind the portal.

V2.E5.8.3.5. High-Pressure Closures. High-pressure closures are large blocks constructed of concrete or other materials that obstruct or greatly reduce the flow of blast effects and debris from an explosion out of or into a storage chamber.

V2.E5.8.3.5.1. When used to reduce QD by restricting the blast outflow from a chamber, the block must be designed to be rapidly driven from an open to a closed position by the detonation pressures in the chamber. While this type of block will provide some protection of chamber contents from an explosion in another chamber, blast doors must also be used to provide complete protection. Tests have shown that a closure block, with sufficient mass, can obstruct the initial outflow of airblast from an explosion in a chamber to reduce pressures in the connecting tunnels by a factor of two or more, even when the block is destroyed. Blocks with sufficient strength to remain structurally intact can provide greater reductions. Because many variables influence the performance of a closing device, their design details must be developed on a site-specific basis.

V2.E5.8.3.5.1.1. For loading densities (w) of 0.625 lb/ft^3 [10 kg/m^3] or higher, a 50-percent reduction in IBD may be applied to the use of a high-pressure closure block, provided the block is designed to remain intact in the event of an explosion.

V2.E5.8.3.5.1.2. For loading densities (w) less than 0.625 lb/ft^3 [10 kg/m^3], use the reductions in paragraphs **V2.E5.8.3.5.1.2.1.** and **V2.E5.8.3.5.1.2.2.**:

V2.E5.8.3.5.1.2.1. For $0.0625 < w < 0.625$ lb/ft^3 [$1.0 < w < 10$ kg/m^3], reductions may be calculated by the equations shown in Figure **V2.E5.F5.**

Figure V2.E5.F5. Paragraph V2.E5.8.3.5.1.2.1. Equations

$y(\%) = 50 \log_{10}(16.02w)$	English EQN V2.E5.8-1
$y(\%) = 50 \log_{10}(1.0w)$	*Metric EQN V2.E5.8-2*
where y is the percent reduction in IBD and w is loading density in lb/ft^3 [kg/m^3]	

V2.E5.8.3.5.1.2.2. For $w < 0.0625$ lb/ft^3 [$w < 1$ kg/m^3]: $y(\%) = 0$.

V2.E5.8.3.5.2. When used to protect the contents of a chamber from an explosion in another chamber, the block must be designed to move from a normally closed position to an open position when entry is required. Blast doors are not required for this type of closure block.

V2.E5.8.4. Chamber Separation Requirements. Minimum storage chamber separation distances are required to prevent or control the communication of explosions or fires between chambers. There are three modes by which an explosion or fire can be communicated: rock spall, propagation through cracks or fissures, and airblast or thermal effects traveling through connecting passages. Spalled rock of sufficient mass that is traveling at a sufficient velocity may damage or sympathetically detonate impacted AE in the acceptor chambers.

V2.E5.8.4.1. Prevention of Damage by Rock Spall (HD 1.1 and HD 1.3). The chamber separation distance is the shortest distance in rock thickness between two chambers. When an explosion occurs in a donor chamber (a PES), a shock wave is transmitted through the surrounding rock. The intensity of the shock decreases with distance. For small chamber separation distances, the shock may be strong enough to produce spalling of the rock walls of adjacent ES chambers. See Table **V2.E5.T2.** for the minimum chamber separation distance required to prevent hazardous spall effects (D_{cd}) when no specific protective construction is used.

V2.E5.8.4.2. Prevention of Propagation by Rock Spall (HD 1.1 and HD 1.3). Because rock spall is considered an immediate mode of propagation, time separations between donor and acceptor explosions may not be sufficient to prevent coalescence of blast waves. If damage to AE stored in adjacent chambers is acceptable, chamber separation distances from those determined to prevent damage, as described in paragraph **V2.E5.8.4.1.** can be reduced to prevent propagation by rock spall. See Table **V2.E5.T2.** for the minimum chamber separation distance required to prevent propagation by rock spall (D_{cp}). If the required D_{cp} in Table **V2.E5.T2.** cannot be met, explosives weights in all chambers must be added together to determine W, unless analyses or experiments demonstrate otherwise.

V2.E5.8.4.3. Prevention of Propagation Through Cracks and Fissures (HD 1.1 and HD 1.3). Propagation between a donor and an acceptor chamber has been observed to occur when natural, near-horizontal jointing planes, cracks, or fissures in the rock between the chambers are opened by the lifting force of the detonation pressure. Before construction of a multi-chamber magazine, a careful site investigation must be made to ensure that such joints or fissures do not extend from one chamber location to an adjacent one. Should such defects be encountered during facility excavation, a reevaluation of the intended siting is required.

V2.E5.8.4.4. Prevention of Propagation through Passageways (HD 1.1 and HD 1.3). Flame and hot gas may provide a delayed mode of propagation. Time separations between the events in the donor chamber and the acceptor chamber by this mode will likely be sufficient to prevent coalescence of blast waves. Consequently, siting is based on each chamber's NEWQD. To protect assets, blast and fire resistant doors may be installed within multi-chambered facilities. Evaluations for required chamber separations due to this propagation mode should be made on a site-specific basis using procedures outlined in the USACE definitive drawing discussed in paragraph **V2.E5.8.1.2.** For HD 1.1 and HD 1.3 materials:

Table V2.E5.T2. Chamber Separation Distances Required to Prevent Damage and Propagation by Rock Spall

NEWQD	Chamber Separation to Prevent Damage by Rock Spall, D_{cd}[a]			Chamber Separation to Prevent Propagation by Rock Spall, D_{cp}[b]	
	Moderate-to-Strong Rock		Weak Rock (all loading densities)	No Protective Construction	With Protective Construction
	w ≤ 3 lbs/ft³	w > 3 lbs/ft³			
	w < 48.1 kg/m³	*w > 48.1 kg/m³*			
	Footnote c	Footnote d	Footnote e	Footnote f	Footnote g
(lbs)	(ft)	(ft)	(ft)	(ft)	(ft)
[kg]	*[m]*	*[m]*	*[m]*	*[m]*	*[m]*
1,000	25	50	35	15.0	7.5
454	*7.6*	*15.2*	*10.7*	*4.6*	*2.3*
2,000	31	63	44	18.9	9.4
907	*9.6*	*19.2*	*13.5*	*5.8*	*2.9*
3,000	36	72	50	22	10.8
1,361	*11.0*	*21.9*	*15.4*	*6.6*	*3.3*
4,000	40	79	56	24	11.9
1,814	*12.1*	*24.1*	*17.0*	*7.3*	*3.7*
5,000	43	85	60	26	12.8
2,268	*13.0*	*26.0*	*18.3*	*7.9*	*3.9*
7,000	48	96	67	29	14.3
3,175	*14.6*	*29.1*	*20.4*	*8.8*	*4.4*
10,000	54	108	75	32	16.2
4,536	*16.4*	*32.8*	*23.0*	*9.9*	*5.0*
20,000	68	136	95	41	20.4
9,072	*20.6*	*41.3*	*29.0*	*12.5*	*6.3*
30,000	78	155	109	47	23.3
13,608	*23.6*	*47.3*	*33.2*	*14.3*	*7.2*
50,000	92	184	129	55	27.6
22,680	*28.0*	*56.0*	*39.3*	*17.0*	*8.5*
70,000	103	206	144	62	30.9
31,751	*31.3*	*62.7*	*44.0*	*19.0*	*9.5*
100,000	116	232	162	70	34.8
45,359	*35.3*	*70.6*	*49.6*	*21.4*	*10.7*
200,000	146	292	205	88	43.9
90,718	*44.5*	*89.0*	*62.5*	*27.0*	*13.5*
300,000	167	335	234	100	50.2
136,077	*50.9*	*101.8*	*71.5*	*30.9*	*15.4*
500,000	198	397	278	119	59.5
226,795	*60.4*	*120.7*	*84.8*	*36.6*	*18.3*
700,000	222	444	311	133	66.6
317,513	*67.5*	*135.1*	*94.8*	*40.9*	*20.5*
1,000,000	250	500	350	150	75.0
453,590	*76.1*	*152.1*	*106.8*	*46.1*	*23.1*

Table V2.E5.T2. Chamber Separation Distances Required to Prevent Damage and Propagation by Rock Spall, Continued

a	D_{cd} has a minimum distance of 15 ft [4.6 m].
b	The D_{cp} distances in this table are based on an explosive loading density (w) of 17 lbs/ft^3 [272.3 kg/m^3] and will likely be safety conservative for lower loading densities.
c	English EQNs (W in lbs, D_{cd} in ft)
	$D_{cd} = 2.5W^{1/3}$ EQN V2.E5.T2-1
	$W = D_{cd}^3/15.625$ EQN V2.E5.T2-2
	Metric EQNs (Q in kg, D_{cd} in m)
	$D_{cd} = 0.99Q^{1/3}$ EQN V2.E5.T2-3
	$Q = D_{cd}^3/0.97$ EQN V2.E5.T2-4
d	English EQNs (W in lbs, D_{cd} in ft)
	$D_{cd} = 5W^{1/3}$ EQN V2.E5.T2-5
	$W = D_{cd}^3/125$ EQN V2.E5.T2-6
	Metric EQNs (Q in kg, D_{cd} in m)
	$D_{cd} = 1.98Q^{1/3}$ EQN V2.E5.T2-7
	$Q = D_{cd}^3/7.762$ EQN V2.E5.T2-8
e	English EQNs (W in lbs, D_{cd} in ft)
	$D_{cd} = 3.5W^{1/3}$ EQN V2.E5.T2-9
	$W = D_{cd}^3/42.875$ EQN V2.E5.T2-10
	Metric EQNs (Q in kg, D_{cd} in m)
	$D_{cd} = 1.39Q^{1/3}$ EQN V2.E5.T2-11
	$Q = D_{cd}^3/2.686$ EQN V2.E5.T2-12
f	English EQNs (W in lbs, D_{cp} in ft)
	$D_{cp} = 1.5W^{1/3}$ EQN V2.E5.T2-13
	$W = D_{cp}^3/3.375$ EQN V2.E5.T2-14
	Metric EQNs (Q in kg, D_{cp} in m)
	$D_{cp} = 0.60Q^{1/3}$ EQN V2.E5.T2-15
	$Q = D_{cp}^3/0.216$ EQN V2.E5.T2-16
g	English EQNs (W in lbs, D_{cp} in ft)
	$D_{cp} = 0.75W^{1/3}$ EQN V2.E5.T2-17
	$W = D_{cp}^3/0.422$ EQN V2.E5.T2-18
	Metric EQNs (Q in kg, D_{cp} in m)
	$D_{cp} = 0.30Q^{1/3}$ EQN V2.E5.T2-19
	$Q = D_{cp}^3/0.027$ EQN V2.E5.T2-20

V2.E5.8.4.4.1. Chamber entrances at the ground surface, or entrances to branch tunnels off the same side of a main passageway, must be separated by at least 15 ft [4.6 m].

V2.E5.8.4.4.2. Entrances to branch tunnels off opposite sides of a main passageway must be separated by at least twice the width of the main passageway.

V2.E5.8.5. Chamber Cover Thickness. The chamber cover thickness is the shortest distance between the ground surface and the natural rock surface at the chamber's ceiling or, in some cases, a chamber's wall. For all types of rock, the critical cover thickness (C_c) required to prevent breaching of the chamber cover by a detonation is shown in Figure **V2.E5.F6.**

Figure V2.E5.F6. Paragraph V2.E5.8.5. **Equations**

$C_c = 2.5W^{1/3}$	English EQN V2.E5.8-3
$C_c = 0.99Q^{1/3}$	*Metric EQN V2.E5.8-4*
where C_c is in ft and W is in lbs [C_c is in m and Q is in kg]	

INTENTIONALLY LEFT BLANK

VOLUME 3: GENERAL QD CRITERIA FOR ACCIDENTAL DETONATIONS

V3.1. INTRODUCTION. This volume provides general QD criteria for the accidental detonation of HD 1.1 through 1.6 AE and HD 6.1 items containing toxic CAs.

VOLUME 3 – ENCLOSURE 1: REFERENCES

See References section at the end of the manual.

VOLUME 3 – ENCLOSURE 2: RESPONSIBILITIES

See Volume 1 – Enclosure 2.

VOLUME 3 – ENCLOSURE 3: QD CRITERIA FOR ACCIDENTAL DETONATIONS

V3.E3.1. HD 1.1

V3.E3.1.1. Permissible Exposures to Airblast Overpressure

V3.E3.1.1.1. 12 psi [82.7 kilopascals (kPa)] at $9W^{1/3}$ where W is weight in pounds (lbs) [$3.57Q^{1/3}$ where Q is NEQ in kilograms (kg)]. Barricading is required.

V3.E3.1.1.1.1. Buildings that house the following are permitted at this overpressure:

V3.E3.1.1.1.1.1. Successive steps of a single production, renovation, or maintenance operation.

V3.E3.1.1.1.1.2. A security alert force.

V3.E3.1.1.1.1.3. A tactical missile site, where greater distances from the PES cannot be provided for technical or tactical reasons.

V3.E3.1.1.1.1.4. Break rooms and change houses that are both part of an operating line and used exclusively by personnel operating the line. An exception is when the break room is integral to the PES and used only by personnel from that PES. For this situation, no QD applies.

V3.E3.1.1.1.1.5. Dunnage preparation or similar non-AE operations, if used only by personnel employed at the PES.

V3.E3.1.1.1.1.6. Temporary holding areas for AE conveyances servicing production or maintenance facilities.

V3.E3.1.1.1.1.7. AE-related operations in magazine areas, when performing minor maintenance, preservation, packaging, or surveillance inspection.

V3.E3.1.1.1.1.8. Barricaded service magazines that are part of an operating line. Separation distances are based on the NEWQD and the HD of the AE in the magazine and not that in other parts of the operating line.

V3.E3.1.1.1.2. Exceptions include:

V3.E3.1.1.1.2.1. Unmanned auxiliary utility facilities (e.g., transformer stations, water treatment and pollution abatement facilities) that serve, but are not an integral function in, the PES and would not create an immediate secondary hazard if lost. Such unmanned facilities need not be barricaded. Paragraph **V4.E5.2.2.** addresses situations where auxiliary facilities

serving only one PES or AE operation may be separated from the facility or operation they support based only on fire separation distance.

V3.E3.1.1.1.2.2. Unmanned auxiliary power generation or conversion facilities that exclusively supply power to an AE storage area or security fence lighting may be located at fire protection distance (50 feet (ft) [15.2 meters (m)] for non-combustible structures, 100 ft [30.5 m] for combustible structures) from AE facilities.

V3.E3.1.1.2. 3.5 psi [24 kPa] at $18W^{1/3}$ [$7.14Q^{1/3}$].

V3.E3.1.1.2.1. Facilities that house the following are permitted at this overpressure:

V3.E3.1.1.2.1.1. Labor-intensive AE operations (e.g., surveillance, maintenance, inspection) closely related to the PES.

V3.E3.1.1.2.1.2. Buildings, excluding magazine-area loading docks, for comfort, safety, or convenience (e.g., lunchrooms, motor pools, area offices, auxiliary fire stations, transportation dispatch points, and shipping and receiving buildings) that are used exclusively in support of the PES.

V3.E3.1.1.2.1.2.1. **(Added)(AF)** Gatehouses.

V3.E3.1.1.2.1.2.2. **(Added)(AF)** Field offices for branch or flight level supervision, Munitions Operations, munitions control, training, mobility, etc. See paragraph **V4.E5.27.3.4.** for offices of personnel who perform hands-on work and their first level supervisors.

V3.E3.1.1.2.1.2.3. **(Added)(AF)** Dunnage preparation.

V3.E3.1.1.2.1.2.4. **(Added)(AF)** Small packing and shipping buildings.

V3.E3.1.1.2.1.2.5. **(Added)(AF)** Dog kennels.

V3.E3.1.1.2.1.2.6. **(Added)(AF)** Area security control (apply IBD to Base Defense Operations Center (BDOC) per paragraph **V3.E3.1.1.6.10.12.**).

V3.E3.1.1.2.1.2.7. **(Added)(AF)** Motor pool dispatch points (for vehicles supporting storage area only).

V3.E3.1.1.2.1.2.8. **(Added)(AF)** Staffed power plants and staffed non-explosive hazardous material collection points.

V3.E3.1.1.2.1.2.9. **(Added)(AF)** Response Force Tactical Facilities (RFTF).

V3.E3.1.1.2.1.2.10. **(Added)(AF)** Lunchrooms.

V3.E3.1.1.2.1.2.11. **(Added)(AF)** Break rooms and change houses supporting multiple PESs.

V3.E3.1.1.2.1.2.12. **(Added)(AF)** Inert operations involving components of an explosive weapon system; the operation must involve support of an explosive operation such as repairing bomb fins, or the operation simulates an explosive operation.

V3.E3.1.1.2.1.2.13. **(Added)(AF)** Auxiliary fire stations (apply IBD to main base support fire stations per paragraph **V3.E3.1.1.6.10.11.**).

V3.E3.1.1.2.1.2.14. **(Added)(AF)** Training facilities.

V3.E3.1.1.2.1.2.15. **(Added)(AF)** Manned facilities of a defensive or tactical missile battery.

V3.E3.1.1.2.1.2.16. **(Added)(AF)** Ground control approach (GCA), radar approach control (RAPCON), and air traffic control (ATC) towers that support a military use only airfield.

V3.E3.1.1.2.1.2.17. **(Added)(AF)** Unmanned antenna or antenna farms. These are facilities that generate electromagnetic radiation which may or may not pose a threat to EIDs. A greater distance may be required to protect EIDs at the PES. See AFI 91-208 to determine SSD.

V3.E3.1.1.2.1.2.18. **(Added)(AF)** Unoccupied weather equipment facilities from the explosives area being supported.

V3.E3.1.1.2.1.3. Parallel operating lines, whether or not barricaded, provided the AE involved in each operating line present similar hazards. The criticality or survivability of one or more of the operating lines may require that each line be given IBD-level protection.

V3.E3.1.1.2.1.3.1. **(Added)(AF)** Provide successive steps within a single explosives process or operation as much protection as practical, but do not require QD separation. If the successive steps are housed in separate facilities provide ILD separation between facilities.

V3.E3.1.1.2.1.4. Operational support buildings (e.g., day rooms, operation offices, and similar functions) that only personnel from the activity operating the PES use or attend.

V3.E3.1.1.2.1.5. Training functions (e.g., classroom and field training of personnel who may be required to engage in AE work) that only personnel from the activity operating the PES use or attend. Maneuver areas, proving ground tracks, and similar facilities for armored vehicles also may be exposed to 3.5 psi [24 kPa] because the vehicles provide adequate protection to the operators from fragments and debris.

V3.E3.1.1.2.1.6. Maintenance of military vehicles or equipment that are located outside the United States, when the PES is a basic load or a ready storage area. In such cases:

V3.E3.1.1.2.1.6.1. The NEWQD at each PES is limited to 8,818 pounds (lbs) [4,000 kilograms (kg)] or less.

V3.E3.1.1.2.1.6.2. The maintenance work must be performed exclusively for the unit for which the basic load of AE is stored.

V3.E3.1.1.2.1.7. Auxiliary power and utilities functions, including auxiliary power plants; compressor stations; electric power transformers; tool and consumable supplies storage and issue; and handling equipment service, battery charging, and minor repair.

V3.E3.1.1.2.1.7.1. When such facilities serve an entire naval station or base complex, or when loss of the facility causes an immediate loss of vital function, the minimum exposure level is IBD ($40\text{-}50W^{1/3}$ [$15.87\text{-}19.84Q^{1/3}$]).

V3.E3.1.1.2.1.7.2. Naval station "cold-iron" ship support facilities (e.g., supply and mechanical support) are excluded from QD criteria when they are not continuously manned; when they are serving only the waterfront area; and when the PES is a ship or AE handling location on the waterfront.

V3.E3.1.1.2.1.8. Minimum distance between separate groups of AE-loaded, combat-configured aircraft or between aircraft and a pre-load or "quick-turn" site that serves to arm an aircraft. The use of intervening barricades is required to eliminate propagation by primary fragment impact, thereby eliminating the need to total NEWQD. Loading AE aboard aircraft can be accomplished within each group of aircraft without additional protection.

V3.E3.1.1.2.1.8. **(Added)(AF)** For QD purposes, all combat forces at a single location are considered related. This may include Air Force, Army, Navy, Marines, and host-nation aircraft. One set of QD criteria applies to all combat forces at a single location (e.g., facilities or functions related to Air Force fighter aircraft are also related to Navy fighter aircraft). When the services disagree on the required QD, forward the problem through MAJCOM channels to AFSEC/SEW for action.

V3.E3.1.1.2.1.9. Unbarricaded service magazine separation distances are based on the NEWQD and the HD of the AE in the magazine and not that in other parts of the operating line.

V3.E3.1.1.2.1.10. Container stuffing and unstuffing operations that provide routine support to a PES. This applies only to main support functions that are set aside for support of ship-loading, depot, or manufacturing operations. When in connection with ship loading and unloading and the ES is an AE ship, the quantity at the container site governs. Container stuffing and unstuffing in a magazine area are permitted at IMD in accordance with paragraph **V3.E3.1.5.** Criteria applicable to the loading and unloading of a conveyance at a magazine are addressed in section **V4.E5.19.**

V3.E3.1.1.2.1.11. Combat aircraft support facilities:

V3.E3.1.1.2.1.11.1. Between AE-loaded combat aircraft and those non-AE facilities that directly support the servicing and launching of a unit's armed aircraft. Such facilities include operating facilities that handle AE on the flight line, or prepare and service armed aircraft, and facilities that house personnel who fly combat aircraft.

V3.E3.1.1.2.1.11.2. Direct flight line combat aircraft associated facilities, which may contain field offices, break rooms, unit training rooms, and equipment and supply rooms, as well as petroleum, oils, and lubricants hydrant facilities, and civil engineer fire protection stations. Morale, welfare, and recreation (MWR) facilities; base civil engineering headquarters; and industrial facilities, including central base supply, are required to be at IBD.

V3.E3.1.1.2.1.11.3. **(Added)(AF)** All facilities and functions directly involved in maintaining, servicing, controlling, and flying combat aircraft are considered related to AE on the flightline supporting those combat aircraft and may be sited at ILD from such AE (subject to minimum separation distances from HASs as specified in paragraph **V4.E3.7.7.**). The primary test to be applied in determining combat aircraft related facilities is that the function provides essential daily and direct support for the PES presenting the hazard. Examples of facilities and functions generally considered related to combat aircraft generation include:

V3.E3.1.1.2.1.11.3.1. **(Added)(AF)** Maintenance Group and Operations Group functions.

V3.E3.1.1.2.1.11.3.2. **(Added)(AF)** Liquid oxygen (LOX) servicing facilities, including hot pit refueling areas.

V3.E3.1.1.2.1.11.3.3. **(Added)(AF)** Intelligence, debriefing, and flightline security functions.

V3.E3.1.1.2.1.11.4. **(Added)(AF)** Because combat aircraft generation cannot progress without their combined efforts, combat aircraft support functions and facilities involving explosives may be considered related to each other, if they are considered related to the combat aircraft. Therefore, all explosives support functions and facilities deemed related to combat aircraft generation activities on the flightline may be located at ILD from one another (subject to minimum separation distances from HASs as specified in paragraph **V4.E3.7.7.**).

V3.E3.1.1.2.1.11.5. **(Added)(AF)** Separate combat aircraft related facilities from other installation PESs by ILD, see paragraph **V3.E3.1.1.2.2.1.**

V3.E3.1.1.2.1.11.6. **(Added)(AF)** Flightline Dining Facilities. Provide ILD from PES locations when the dining facility is only used by personnel who directly support AE activities on the installation. Provide IBD with a minimum fragment distance from all PES locations when access to the dining facility is available to personnel who do not directly support installation AE activities.

V3.E3.1.1.2.2. Exposures indicated in paragraphs **V3.E3.1.1.2.1.1.** through **V3.E3.1.1.2.1.11.** that are provided blast suppression and structure hardening to achieve comparable protection levels for personnel and equipment as provided by $18W^{1/3}$ [$7.14Q^{1/3}$] may be sited at $9W^{1/3}$ [$3.57Q^{1/3}$].

V3.E3.1.1.2.2.1. **(Added)(AF)** Allowable Unbarricaded ILD Exposures. For the following situations, the use of unbarricaded ILD may be used:

V3.E3.1.1.2.2.1.1. **(Added)(AF)** All personnel and facilities that directly support a PES can be considered related to other AE activities (e.g., munitions or weapons storage area, combat aircraft, explosives cargo aircraft related activities) on the installation with the exception of intentional burning of AE, static firing of motors, areas used for intentional detonations, non-DoD explosive activities, and remotely controlled explosives operations. Protection required for the excepted activities will be based on essential and non-essential personnel separation requirements defined elsewhere in this manual. MAJCOM supplements to this manual provide guidance on determining whether operations within a single facility require QD separation and factors to consider are:

V3.E3.1.1.2.2.1.1.1. **(Added)(AF)** Whether the same personnel are involved in both operations (e.g., AE workers are assigned to the same flight and move between operations as required).

V3.E3.1.1.2.2.1.1.2. **(Added)(AF)** Whether the same AE are involved in both operations (e.g., air-to-air missiles, chaff or flare).

V3.E3.1.1.2.2.1.1.3. **(Added)(AF)** Whether the operations are the same type (e.g., inspection, buildup).

V3.E3.1.1.2.2.1.1.4. **(Added)(AF)** Whether the AE involved in both operations presents similar hazards (e.g., same HD or CG).

V3.E3.1.1.2.2.2. **(Added)(AF)** Combat Aircraft Related Activities. See paragraph **V3.E3.1.1.2.1.11.**

V3.E3.1.1.2.2.3. **(Added)(AF)** Explosive Cargo Aircraft Related Activities. See paragraph **V4.E3.1.4.**

V3.E3.1.1.2.2.4. **(Added)(AF)** Munitions or Weapons Storage Area Related Activities. See paragraph **V4.E3.1.5.**

V3.E3.1.1.2.2.5. **(Added)(AF)** For exposures that are provided blast suppression and structure hardening so that equivalent ILD protection for personnel and equipment is provided. Separate the following hardened facilities at reduced ILD (related facility) based upon their degree of hardening. **(T-1).** Minimum separation distances for occupied facilities from

HASs still apply. **(T-1).** See paragraph **V4.E3.7.7.** Provide definitive designs justifying a reduced K-factor. **(T-1).**

V3.E3.1.1.2.2.5.1. **(Added)(AF)** Hardened LOX Generation or Bulk Storage Facilities.

V3.E3.1.1.2.2.5.2. **(Added)(AF)** Hardened POL Truck Shelters (use IBD for parking lots for fuel service trucks unrelated to the PES).

V3.E3.1.1.2.2.5.3. **(Added)(AF)** Hardened Chemical Biological Radiological (CBR) Collective Protection Facility-K7.

V3.E3.1.1.2.2.5.4. **(Added)(AF)** Hardened Squadron Operations Facility-K7.

V3.E3.1.1.2.2.5.5. **(Added)(AF)** Hardened RFTF-K9.

V3.E3.1.1.2.2.6. **(Added)(AF)** Construction activities exposed by related PESs. This separation requirement applies to all construction activities related to PESs whether being accomplished by civilian, military, or host-nation personnel. Document a risk assessment, including the control measures taken and ensure all construction personnel are made aware of the explosives risks and evacuation procedures (e.g., emergency and lightning response) (see section **V1.E9.2.**). Locally maintain the risk assessment documentation until operations have been completed and personnel have permanently vacated the work site. If this separation cannot be maintained, obtain a waiver per **Volume 1 – Enclosure 3**. Apply IBD IAW paragraph **V3.E3.1.1.6.** to all construction activities not related to existing PESs.

V3.E3.1.1.3. 2.3 psi [15.8 kPa] at $24W^{1/3}$ [$9.52Q^{1/3}$]. Personnel exposed to remotely controlled operations.

V3.E3.1.1.4. 2.3-1.7 psi [15.8-11.7 kPa] at $24\text{-}30W^{1/3}$ [$9.52\text{-}11.9Q^{1/3}$].

V3.E3.1.1.4. **(Added)(AF)** Allowable PTRD Exposures.

V3.E3.1.1.4.1. Public traffic routes (PTRs) with medium and low traffic densities, as described in paragraph **V3.E3.1.2.1.1.5.**

V3.E3.1.1.4.2. On-base roads. The DoD Components may provide protection less than 60 percent of IBD to installation-related personnel transiting QD arcs when the risks are evaluated, documented, and in accordance with DoD Component-established procedures. Effective October 1, 2000, all new construction of AE storage and operating facilities, and any change in operations within existing facilities that increases the explosives safety risk, should provide both the general public and installation-related personnel who are not involved in munitions-related operations protection that provides a minimum of 60 percent of IBD. When a DoD Component determines exposures at less than 60 percent of IBD are necessary, the DoD Component should consider use of methods to inform transients of potential risks (e.g., written acknowledgment of the risk by vendors or others with a recurring need to transit the explosives safety quantity-distance (ESQD) area, warning signs, flashing lights, physical barriers). The

DoD Component's decision to provide transients protection at less than 60 percent of IBD will be:

V3.E3.1.1.4.2.1. Supported by a qualitative risk assessment considering factors such as:

V3.E3.1.1.4.2.1.1. Operational necessity.

V3.E3.1.1.4.2.1.2. The operation being performed (e.g., static storage, maintenance, production).

V3.E3.1.1.4.2.1.3. Operational activity cycles.

V3.E3.1.1.4.2.1.4. Alternate routes.

V3.E3.1.1.4.2.1.5. Traffic density.

V3.E3.1.1.4.2.1.6. Accident records.

V3.E3.1.1.4.2.1.7. Time interval of exposure.

V3.E3.1.1.4.2.1.8. Type and quantity of AE in proximity to the area transited.

V3.E3.1.1.4.2.1.9. The closest distance from the area transited to the PES.

V3.E3.1.1.4.2.1.10. The need for installation-related personnel to transit the ESQD arc.

V3.E3.1.1.4.2.2. Reviewed as changes occur to operations, which would increase the explosives safety risk, or the number of exposed, and upon change of the approving authority.

V3.E3.1.1.4.2.3. **(Added)(AF)** For those sited PES and on-installation road relationships existing prior to 1 October 2000 accomplish the following risk assessment and documentation:

V3.E3.1.1.4.2.3.1. **(Added)(AF)** On a copy of the installation map, identify the following:

V3.E3.1.1.4.2.3.1.1. **(Added)(AF)** All PESs having QD arcs (PTRD or IBD based on traffic density) encompassing on-installation roads traveled by personnel not involved in munitions-related operations. **(T-1).**

V3.E3.1.1.4.2.3.1.2. **(Added)(AF)** The NEWQD of the above PESs. **(T-1).**

V3.E3.1.1.4.2.3.1.3. **(Added)(AF)** The applicable QD arcs (PTR or IBD) of the above PESs based on the traffic density. **(T-1).**

V3.E3.1.1.4.2.3.1.4. **(Added)(AF)** The segments of the applicable on-installation roads passing through the above arcs. **(T-1).**

V3.E3.1.1.4.2.3.2. **(Added)(AF)** Document the commander's risk acceptance through a formal memorandum. **(T-1).** This memorandum must include the map showing the relationships accepting risk, a summary of the risk assessment, and a statement that the subject relationships existed as of 1 October 2000. **(T-1).** Upon change of approving authority, ensure the new commander is informed of the previous risk acceptance. **(T-1).**

V3.E3.1.1.4.2.4. **(Added)(AF)** Include the commander's risk acceptance and attached map in amendments to ESPs (for PESs existing prior to 1 October 2000) or reference if previously submitted with another ESP amendment. **(T-1).**

V3.E3.1.1.4.3. Open-air recreation facilities (e.g., baseball diamonds, golf courses, and volleyball courts), which do not contain structures, used for MWR and community relations purposes at military installations and activities. As an exception, neither blast nor fragment criteria apply when such facilities are located near AE support operations and used by off-duty military, on-duty military, or DoD civilians or contractors (e.g., munitions workers, security guards, firefighters) who directly support these AE operations. However, such facilities should fully comply with this manual when possible.

V3.E3.1.1.4.3.1. **(Added)(AF)** This does not authorize the building of elaborate structures that substitute for properly sited recreational facilities or the collocation of unrelated military functions. Separate at ILD from other related PESs.

V3.E3.1.1.4.4. Training areas (e.g., observation points, classrooms or other instruction areas for ranges, and similar fixed facilities designed for occasional use coincident with the use of the range). As an exception, to allow for realism in training, this separation does not apply to AE needed for any particular exercise or on-the-job training. However, this separation or equivalent protection is required from permanent PES and AE supply points.

V3.E3.1.1.4.5. Open-air aircraft passenger loading and unloading areas.

V3.E3.1.1.4.6. Parking lots for administrative areas. Minimum fragment distances apply; see paragraph **V3.E3.1.2.**

V3.E3.1.1.4.7. Inert storage located in the open (no structures involved) when not directly related to the explosives mission and when accessed by personnel not directly related to the explosives mission. If located within a structure, apply paragraph **V3.E3.1.1.6.9.**

V3.E3.1.1.4.8. **(Added)(AF)** Aircraft battle damage repair training areas.

V3.E3.1.1.4.9. **(Added)(AF)** Unmanned antenna or antenna farms when not directly related to the explosives mission. These are facilities that generate electromagnetic radiation which may or may not pose a threat to EIDs. A greater distance may be required to protect EIDs at the PES. See AFI 91-208 to determine SSDs. PTRD is based on blast overpressure only; fragment distances are not required.

V3.E3.1.1.4.10. **(Added)(AF)** Unoccupied weather equipment (antennas, ceilometers, etc.) not exclusively supporting an explosives area and when located in the open. The PTRD will be based on overpressure only; fragment distances will not be used.

V3.E3.1.1.4.11. **(Added)(AF)** Joint DoD-non-DoD use taxiway. A taxiway serving both DoD and commercial aircraft. A taxiway serving solely DoD, DoD chartered, or non-DoD aircraft on DoD authorized business is not joint use.

V3.E3.1.1.4.12. **(Added)(AF)** Provide operating personnel exposed to explosives research, development and test operations that are conducted by remote control procedures protection per paragraphs **V1.E9.3.2.**, **V1.E9.4.1.**, and **V1.E9.4.2.** Also provide non-related personnel IBD protection.

V3.E3.1.1.4.13. **(Added)(AF)** Land used for agricultural purposes. Apply PTRD without a minimum fragment distance for new PES locations or when a new ESP is required for an existing PES and the following conditions exist:

V3.E3.1.1.4.13.1. **(Added)(AF)** The exposure is frequent or higher, as described in Table **V1.E3.T2.** (e.g., when manual methods and numerous laborers are needed for certain types of crops or locations).

V3.E3.1.1.4.13.2. **(Added)(AF)** The exposure is determined to be occasional or lower (QD not required). See Table **V1.E3.T2.**

V3.E3.1.1.5. 1.7 psi [11.7 kPa] at $30W^{1/3}$ [$11.9Q^{1/3}$]. Combat aircraft parking areas (CAPAs) exposed to AE storage and operating facilities.

V3.E3.1.1.6. 1.2-0.90 psi [8.3-6.2 kPa] at $40\text{-}50W^{1/3}$ [$15.87\text{-}19.84Q^{1/3}$].

V3.E3.1.1.6**. (Added)(AF)** Allowable IBD Exposures. This section identifies allowable exposures to explosives. Further specific guidance may be found in the appropriate sections of this manual. Contact your MAJCOM/SEW for assistance in determining required separation if guidance is not provided in this manual.

V3.E3.1.1.6.1. Inhabited buildings and administrative and housing areas.

V3.E3.1.1.6.2. An installation boundary, unless the area outside the boundary naturally prohibits access, is government land that is not open to the public, or access is restricted and controlled by other means. When IBD QD arcs penetrate an installation's boundary, the

Service must certify that IBD protection does not apply to the encumbered area and must establish procedures to monitor the area for any change in status.

V3.E3.1.1.6.2.1. **(Added)(AF)** If a proposed PES creates an IBD clear zone extending beyond the base boundary, the hazard becomes a legal issue. An IBD arc may fall outside of the installation boundary, without causing a deviation to QD requirements, provided one of the following methods of protecting the public and public property is complied with:

V3.E3.1.1.6.2.1.1. **(Added)(AF)** Off-installation land owned by a Federal, State, or Municipal agency in the Continental United States (CONUS) or its possessions or territories.

V3.E3.1.1.6.2.1.1.1. **(Added)(AF)** An existing restrictive easement MOA or MOU encompasses the off-installation land encumbered by the explosives clear zone of the PES. Prior to establishing the PES, Safety (SE), CE, and JA representatives must review and ensure compliance with applicable in-place restrictive easement, MOA, or MOU rights. **(T-1).** The commander will designate personnel to perform a quarterly review of the area to ensure compliance with the restrictive easement, MOA, or MOU. **(T-1).**

V3.E3.1.1.6.2.1.1.2. **(Added)(AF)** A new restrictive easement, MOA, or MOU is obtained from the land owner for the off-installation land encumbered by the explosives clear zone prior to establishing or constructing the PES. Before funding construction, the installation commander, Facility Board, and facility user must be briefed and accept the need to reduce or eliminate NEWQD in the user's facility to prevent a deviation providing the desired restrictive easement is not obtained. **(T-1).** Request for preliminary ESP approval may be sought prior to obtaining the restrictive easement. Submit documentation substantiating coordination of the restrictive easement with the AFCEC and recording with the USACE prior to submission and request for final ESP approval. **(T-1).** The commander will designate personnel to perform a quarterly review of the area to ensure compliance with the restrictive easement. **(T-1).**

V3.E3.1.1.6.2.1.1.3. **(Added)(AF)** Off-installation land owned by another DoD agency. In cases where an Air Force PES generates an explosives IBD clear zone encroaching onto property owned by another DoD service, the local Air Force organization responsible for submitting the ESP will obtain written acknowledgement from the exposed service component SE and CE equivalent offices for inclusion with the ESP submission package. **(T-1).** It is up to the acknowledging agency to update their maps to reflect the Air Force explosives clear zone for their future planning purposes and to notify the Air Force unit of any planned exposures. The MAJCOM and AFSEC/SEW will coordinate with the applicable service component equivalent prior to requesting DDESB ESP approval. **(T-1).** Recommend establishing an MOU or MOA with the other DoD agency.

V3.E3.1.1.6.2.1.1.4. **(Added)(AF)** Off-installation land owned by other Federal, state, and local agencies. In cases where an Air Force PES generates an explosives IBD clear zone encroaching onto property owned by another federal agency, the local Air Force organization responsible for submitting the ESP will obtain written acknowledgement from the exposed agency SE and CE equivalent offices for inclusion with the ESP submission package.

(T-1). It is up to the acknowledging agency to update their maps to reflect the Air Force explosives clear zone for their future planning purposes and to notify the Air Force unit of any planned exposures. Recommend establishing an MOU or MOA with the other Federal agency.

V3.E3.1.1.6.2.1.2. **(Added)(AF)** Off- installation land owned by a private land owner requires a restrictive easement. All other requirements stated above in paragraphs **V3.E3.1.1.6.2.1.1.1.** and **V3.E3.1.1.6.2.1.1.2.** apply.

V3.E3.1.1.6.2.1.3. **(Added)(AF)** The off- installation land encumbered by the explosives clear zone is open and manifestly unsuitable for habitation or public gatherings, is government land that is not open to the public, or access is restricted and controlled by other means. Only appropriate local government agencies for public safety, environment and health can declare land outside the base boundary unsuitable for habitation or public gatherings. Maintain documentation determining this land unsuitable for habitation or public gatherings with real property records. **(T-1).** The commander, Facility Board, and facility user must be briefed and accept the need to reduce or eliminate NEWQD in the PES creating the clear zone to prevent a deviation providing a new encumbrance occurs. **(T-1).** The commander will designate personnel to perform quarterly reviews of the area to ensure it remains open, uninhabited, and unused and must periodically reconsider obtaining a restrictive easement, MOA, MOU, or purchase of the land. **(T-1).**

V3.E3.1.1.6.2.1.4. **(Added)(AF)** Establishing a clear zone beyond the installation boundary that does not involve a private land owner and where no new construction is involved. If the IBD clear zone extends past the installation boundary, a deviation must accompany the QD safety submission unless the following compensatory measures can be accomplished:

V3.E3.1.1.6.2.1.4.1. **(Added)(AF)** A signed letter of agreement (LOA) between the installation commander and airport manager stating that non-related personnel and activities are not exposed when the mission generating the clear zone is implemented. **(T-1).** LOAs are not intended to insinuate the land owner accepts the risk, but rather to confirm exposures are eliminated when mission accomplishment dictates need.

V3.E3.1.1.6.2.1.4.2. **(Added)(AF)** LOAs must address termination terms of the LOA in writing with the appropriate parties. **(T-1).** Coordinate the LOA with CE and JA to validate all the terms of the agreement.

V3.E3.1.1.6.3. Recreation facilities (e.g., baseball diamonds, golf courses, and volleyball courts) that contain structures.

V3.E3.1.1.6.3.1. **(Added)(AF)** PTR may be applied to the field, course or court but IBD is required to the subject structures.

V3.E3.1.1.6.4. Flight-line passenger service functions (e.g., terminal buildings).

V3.E3.1.1.6.5. Main powerhouses that provide vital utilities to a major portion of an installation.

V3.E3.1.1.6.6. Shops that by reason of their vital strategic nature, or high intrinsic value of their contents, should not be placed at risk.

V3.E3.1.1.6.7. Functions that, if momentarily put out of action, would cause an immediate secondary hazard by reason of their failure to function.

V3.E3.1.1.6.8. PTRs with high traffic density as described in paragraph **V3.E3.1.2.1.1.5.**

V3.E3.1.1.6.9. Inert storage located in a structure when not directly related to the explosives mission and when accessed by personnel not directly related to the explosives mission. If no structure is involved, apply paragraph **V3.E3.1.1.4.7.**

V3.E3.1.1.6.10. **(Added)(AF)** Buildings inhabited by people not related to munitions or explosives work. The following are examples of facilities not considered "related" to any PES:

V3.E3.1.1.6.10.1. **(Added)(AF)** Force Support Squadron (FSS) facilities that contain structures.

V3.E3.1.1.6.10.2. **(Added)(AF)** Base civil engineering (CE) headquarters.

V3.E3.1.1.6.10.3. **(Added)(AF)** Industrial facilities, including central base supply and depot repair facilities.

V3.E3.1.1.6.10.4. **(Added)(AF)** Family housing, passenger terminals, and chapels.

V3.E3.1.1.6.10.5. **(Added)(AF)** Military billets, including permanent party dormitories, transient quarters, and other temporary billeting facilities, such as tent cities.

V3.E3.1.1.6.10.6. **(Added)(AF)** Commissaries, schools, and nurseries.

V3.E3.1.1.6.10.7. **(Added)(AF)** Wing and base headquarters, staff agencies (e.g., plans, manpower, safety, comptroller functions, etc.).

V3.E3.1.1.6.10.8. **(Added)(AF)** Hospitals and dispensaries.

V3.E3.1.1.6.10.9. **(Added)(AF)** Theaters.

V3.E3.1.1.6.10.10. **(Added)(AF)** Main exchanges, except for flightline annexes.

V3.E3.1.1.6.10.11. **(Added)(AF)** Base fire departments, except for flightline fire stations.

V3.E3.1.1.6.10.12. **(Added)(AF)** Law enforcement and BDOC.

V3.E3.1.1.6.10.13. **(Added)(AF)** Hydrazine servicing facilities supporting multiple bases.

V3.E3.1.1.6.10.14. **(Added)(AF)** Joint DoD or non-DoD use runway.

V3.E3.1.1.6.10.15. **(Added)(AF)** EOD facilities (offices, classrooms, shops).

V3.E3.1.1.6.10.16. **(Added)(AF)** GCA, RAPCON, and ATC towers that support a joint use airfield, from all PESs.

V3.E3.1.1.6.10.17. **(Added)(AF)** Hazardous waste collection points not exclusively supporting an explosives area.

V3.E3.1.1.6.10.18. **(Added)(AF)** Unoccupied structures housing weather equipment not exclusively supporting an explosives area. Base the IBD on overpressure only; fragment distances are not applied.

V3.E3.1.1.6.10.19. **(Added)(AF)** Activities such as concerts, bazaars, and ceremonies (e.g., change of command, etc.) attended by people not related to munitions or explosives work.

V3.E3.1.1.6.10.20. **(Added)(AF)** Construction activities that are not related to existing explosives facilities or operations.

V3.E3.1.1.6.11**. (Added)(AF)** Utilities and Services.

V3.E3.1.1.6.11.1. **(Added)(AF)** Utilities include steam, water, natural gas, POL lines, sewage, air lines, electrical lines, communication lines, and environmental facilities or equipment. The term "utility" does not apply to services provided to individual or grouped explosives facilities when that service is not also secondarily provided to other parts of the installation or community. The following requirements apply to utilities:

V3.E3.1.1.6.11.1.1. **(Added)(AF)** Do not locate utilities that provide vital functions to a major portion of an installation closer to PESs than IBD. **(T-1).**

V3.E3.1.1.6.11.1.2. **(Added)(AF)** Do not locate power and utilities functions, including power plants, compressor stations, and electric power transformers that serve an entire base complex; or when loss of the facility will cause an immediate loss of vital function, closer to PESs than IBD. **(T-1).**

V3.E3.1.1.6.11.1.3. **(Added)(AF)** Site underground electrical and communications lines at K3 with no minimum distance required. **(T-1).** Other underground utilities will meet the siting requirements of paragraph **V4.E5.13.5.1. (T-1).**

V3.E3.1.1.6.11.2. **(Added)(AF)** Do not locate overhead electric service lines (running past an explosives facility, but not serving it) closer to a combustible explosives facility or to an open explosives facility than the length of the electric lines between the nearest service poles and the length of the nearest service pole. An exception is when an effective means (e.g., line spacers, weights, etc.) is provided to ensure that energized lines on breaking cannot come into contact with the facility or its appurtenances. No separation is required for non-combustible facilities.

V3.E3.1.1.6.11.3. **(Added)(AF)** Locate manned auxiliary services, including auxiliary power plants, compressor stations, and electric power transformers, at ILD from PESs they support. **(T-1).**

V3.E3.1.1.6.11.4. **(Added)(AF)** Locate unmanned auxiliary services (e.g., transformer stations, water treatment and pollution abatement facilities) that serve an explosives area, but are not an integral function in the explosives area, and that would not create an immediate secondary hazard if lost, at barricaded ILD from the PESs they support, even though such services need not be barricaded. **(T-1).**

V3.E3.1.1.6.11.5. **(Added)(AF)** Locate unmanned auxiliary service power generation or conversion facilities (e.g., power plants, transformers, etc.) that exclusively supply power to an explosives area or security fence lighting at fire protection distance (50 feet for non-combustible ES structures, 100 feet for combustible ES structures) from all PESs in the supported explosives area. **(T-1).**

V3.E3.1.1.6.11.6. **(Added)(AF)** Locate unmanned aboveground utility services (e.g., water treatment, pollution abatement facilities, water pump stations, sewage lift stations, etc.) that do not serve an explosives area or an entire base complex, and when loss will not cause an immediate loss of a vital function at IBD with no minimum fragment distance. **(T-1).**

V3.E3.1.1.6.11.7. **(Added)(AF)** See section **V2.E3.5.** for design requirements for electrical lines serving a PES.

V3.E3.1.2. Minimum Fragment Distances

V3.E3.1.2.1. The minimum distance for protection from hazardous fragments is based on primary and secondary fragments from the PES and the population or traffic density of the ES. It is defined as the distance at which the density of hazardous fragments becomes 1 per 600 square feet (ft^2) [55.7 square meters (m^2)] (this distance is not the maximum fragment distance (MFD)). DDESB-approved analyses or approved tests may be used to determine minimum distances for primary and secondary fragments. DDESB Technical Paper 13 illustrates a method of determining minimal distances for building debris, while DDESB Technical Paper 16 provides similar information to determine minimal distances for primary fragments. In the absence of appropriate analyses or tests, default hazardous debris distances (HDDs) apply.

V3.E3.1.2.1.1. For populous locations provided IBD protection, the minimum distance is the HFD. If this distance is not known:

V3.E3.1.2.1.1.1. For all types of HD 1.1 in quantities less than or equal to (≤) 450 lbs [204 kg] NEWQD, the HFD is determined according to the criteria in paragraphs **V3.E3.1.2.1.1.1.1.** through **V3.E3.1.2.1.1.1.9.** (PTRD is 60 percent of the specified HFD):

V3.E3.1.2.1.1.1.1. For HD 1.1 in a 7-Bar or a 3-Bar ECM, use ECM distances shown in Table **V3.E3.T1.**, as discussed in paragraph **V3.E3.1.3.** The ILD must be in accordance with paragraph **V3.E3.1.4.1.**

V3.E3.1.2.1.1.1.2. For HD 1.1 in an Undefined ECM where the loading density (or NEWQD/internal volume) is ≤ 0.028 lbs/cubic foot (ft^3) [0.449 kg/cubic meter (m^3)], use ECM distances shown in Table **V3.E3.T1.**, as discussed in paragraph **V3.E3.1.3.** ILD must be in accordance with paragraph **V3.E3.1.4.1.**

V3.E3.1.2.1.1.1.3. For HD 1.1 in an Undefined ECM where the loading density is greater than (>) 0.028 lbs/ft^3 [0.449 kg/m^3], use "ECM side and rear" distances of Table **V3.E3.T1.** and for front exposure, apply the greater of the "ECM – front" IBD distance of Table **V3.E3.T1.** or the HFD from Table **V3.E3.T2.**, for the NEW in the ECM. For application of Table **V3.E3.T2.**, if the ECM headwall meets the definition of aboveground structure, heavy wall (AGS (H) use the "Structure" column, otherwise, use the "Structure" column for nonprimary fragment producing explosives or the "Open" column for primary fragment producing explosives. ILD must be in accordance with paragraph **V3.E3.1.4.1.**

V3.E3.1.2.1.1.1.4. Where ECMs, regardless of structural designation, have been designed, analyzed, or tested to have a reduced IBD and approved by the DDESB, use the approved IBD. ILD must be in accordance with paragraph **V3.E3.1.4.1.**

V3.E3.1.2.1.1.1.5. For HD 1.1 in a structure (excluding ECM) capable of stopping primary fragments, but which can contribute to the debris hazard, use the HFD listed in the "Structure" column of Table **V3.E3.T2.** ILD must be in accordance with paragraph **V3.E3.1.4.** Structures that are capable of stopping primary fragments include all AGS (H and aboveground structure, heavy wall and roof (H/R). Doors and other openings through which primary fragments could exit must be capable of stopping primary fragments from exiting the facility or must be barricaded in accordance with section **V2.E5.4.** to trap primary fragments that could exit the facility.

V3.E3.1.2.1.1.1.6. For primary fragment-producing HD 1.1 in the open or in a structure incapable of stopping primary fragments, use HFD listed in the "Open" column of Table **V3.E3.T2.** ILD must be in accordance with paragraph **V3.E3.1.4.** Structures (other than ECM) that are capable of stopping primary fragments include all AGS (H) and AGS (H/R). All other structures (other than ECM) are considered incapable of stopping primary fragments.

V3.E3.1.2.1.1.1.7. For non-primary fragment-producing explosives in any structure (excluding ECM), truck, trailer, or railcar that may contribute to the debris hazard, use the HFD listed in the "Structure" column of Table **V3.E3.T2.**

V3.E3.1.2.1.1.1.8. Selected items have been evaluated for minimum HFD with results shown in Table **V3.E3.T3.** Other items, through testing, have been hazard classified with a specific HFD presented in the format HD (xx)1.1. The HFD for these items is specified in hundreds of feet (in parenthesis), and they may not be listed in Table **V3.E3.T3.** The distances for these two categories of select items apply only to items in the open. When in facilities, secondary debris as well as primary fragments must be considered. If in a facility that can contain primary fragments, apply criteria of paragraphs **V3.E3.1.2.1.1.1.1.** through **V3.E3.1.2.1.1.1.5.** If in a facility that cannot stop primary fragments, use the greater distance from Table **V3.E3.T3.** (for the item being considered) or the HFD associated with the HD (xx)1.1 item or from the "Open" column of Table **V3.E3.T2.** for determining the applicable HFD. ILD must be in accordance with paragraph **V3.E3.1.4.**

V3.E3.1.2.1.1.1.9. For bare explosives in the open, distance is computed by the formula $D = 40W^{1/3}$ [$15.87Q^{1/3}$].

V3.E3.1.2.1.1.1.10. **(Added)(AF)** The HFD may be determined by default values, such as those shown in Table **V3.E3.T2.** for primary fragments or Tables **V3.E3.T2.** and **V3.E3.T11.** secondary fragments.

Table V3.E3.T1. HD 1.1 IBD and PTRD

NEWQD	IBD From:				PTRD From:			
	ECM			Other	ECM			Other
	Front[a, b]	Side[a]	Rear[c]	PES[d]	Front[e, f]	Side[e]	Rear[e]	PES[e]
(lbs)	(ft)	(ft)	(ft)	(ft)	(ft)	(ft)	(ft)	(ft)
[kg]	*[m]*	*[m]*	*[m]*	*[m]*	*[m]*	*[m]*	*[m]*	*[m]*
1	500	250	250	Footnote	300	150	150	Footnote
0.45	*152.4*	*76.2*	*76.2*	d	*91.4*	*45.7*	*45.7*	e
1.5	500	250	250		300	150	150	
0.68	*152.4*	*76.2*	*76.2*		*91.4*	*45.7*	*45.7*	
2	500	250	250		300	150	150	
0.91	*152.4*	*76.2*	*76.2*		*91.4*	*45.7*	*45.7*	
3	500	250	250		300	150	150	
1.4	*152.4*	*76.2*	*76.2*		*91.4*	*45.7*	*45.7*	
5	500	250	250		300	150	150	
2.3	*152.4*	*76.2*	*76.2*		*91.4*	*45.7*	*45.7*	
7	500	250	250		300	150	150	
3.2	*152.4*	*76.2*	*76.2*		*91.4*	*45.7*	*45.7*	
10	500	250	250		300	150	150	
4.5	*152.4*	*76.2*	*76.2*		*91.4*	*45.7*	*45.7*	
15	500	250	250		300	150	150	
6.8	*152.4*	*76.2*	*76.2*		*91.4*	*45.7*	*45.7*	
20	500	250	250		300	150	150	
9.1	*152.4*	*76.2*	*76.2*		*91.4*	*45.7*	*45.7*	
30	500	250	250		300	150	150	
13.6	*152.4*	*76.2*	*76.2*		*91.4*	*45.7*	*45.7*	
50	500	250	250		300	150	150	
22.7	*152.4*	*76.2*	*76.2*		*91.4*	*45.7*	*45.7*	
70	500	250	250		300	150	150	
31.8	*152.4*	*76.2*	*76.2*		*91.4*	*45.7*	*45.7*	
100	500	250	250		300	150	150	
45.4	*152.4*	*76.2*	*76.2*		*91.4*	*45.7*	*45.7*	
150	500	250	250		300	150	150	
68.0	*152.4*	*76.2*	*76.2*		*91.4*	*45.7*	*45.7*	
200	700	250	250		420	150	150	
90.7	*213.6*	*76.2*	*76.2*		*128.0*	*45.7*	*45.7*	
300	700	250	250		420	150	150	
136.1	*213.6*	*76.2*	*76.2*		*128.0*	*45.7*	*45.7*	
450	700	250	250		420	150	150	
204.1	*213.6*	*76.2*	*76.2*		*128.0*	*45.7*	*45.7*	
500	1,250	1,250	1,250	1,250	750	750	750	750
226.8	*381.0*	*381.0*	*381.0*	*381.0*	*228.6*	*228.6*	*228.6*	*228.6*
700	1,250	1,250	1,250	1,250	750	750	750	750
317.5	*381.0*	*381.0*	*381.0*	*381.0*	*228.6*	*228.6*	*228.6*	*228.6*

Table V3.E3.T1. HD 1.1 IBD and PTRD, Continued

NEWQD	IBD From:				PTRD From:			
	ECM			Other	ECM			Other
	Front[a, b]	Side[a]	Rear[c]	PES[d]	Front[e, f]	Side[e]	Rear[e]	PES[e]
(lbs)	(ft)	(ft)	(ft)	(ft)	(ft)	(ft)	(ft)	(ft)
[kg]	*[m]*	*[m]*	*[m]*	*[m]*	*[m]*	*[m]*	*[m]*	*[m]*
1,000	1,250	1,250	1,250	1,250	750	750	750	750
453.6	*381.0*	*381.0*	*381.0*	*381.0*	*228.6*	*228.6*	*228.6*	*228.6*
1,500	1,250	1,250	1,250	1,250	750	750	750	750
680.4	*381.0*	*381.0*	*381.0*	*381.0*	*228.6*	*228.6*	*228.6*	*228.6*
2,000	1,250	1,250	1,250	1,250	750	750	750	750
907.2	*381.0*	*381.0*	*381.0*	*381.0*	*228.6*	*228.6*	*228.6*	*228.6*
3,000	1,250	1,250	1,250	1,250	750	750	750	750
1,360.8	*381.0*	*381.0*	*381.0*	*381.0*	*228.6*	*228.6*	*228.6*	*228.6*
5,000	1,250	1,250	1,250	1,250	750	750	750	750
2,268.0	*381.0*	*381.0*	*381.0*	*381.0*	*228.6*	*228.6*	*228.6*	*228.6*
7,000	1,250	1,250	1,250	1,250	750	750	750	750
3,175.1	*381.0*	*381.0*	*381.0*	*381.0*	*228.6*	*228.6*	*228.6*	*228.6*
10,000	1,250	1,250	1,250	1,250	750	750	750	750
4,535.9	*381.0*	*381.0*	*381.0*	*381.0*	*228.6*	*228.6*	*228.6*	*228.6*
15,000	1,250	1,250	1,250	1,250	750	750	750	750
6,803.9	*381.0*	*381.0*	*381.0*	*381.0*	*228.6*	*228.6*	*228.6*	*228.6*
20,000	1,250	1,250	1,250	1,250	750	750	750	750
9,071.8	*381.0*	*381.0*	*381.0*	*381.0*	*228.6*	*228.6*	*228.6*	*228.6*
30,000	1,250	1,250	1,250	1,250	750	750	750	750
13,607.7	*381.0*	*381.0*	*381.0*	*381.0*	*228.6*	*228.6*	*228.6*	*228.6*
45,000	1,250	1,250	1,250	1,423	750	750	750	854
20,411.6	*381.0*	*381.0*	*381.0*	*433.7*	*228.6*	*228.6*	*228.6*	*260.3*
50,000	1,289	1,289	1,250	1,474	774	774	750	884
22,679.5	*392.9*	*392.9*	*381.0*	*448.9*	*235.7*	*235.7*	*228.6*	*269.4*
70,000	1,442	1,442	1,250	1,649	865	865	750	989
31,751.3	*439.5*	*439.5*	*381.0*	*502.2*	*263.7*	*263.7*	*228.6*	*301.3*
100,000	1,625	1,625	1,250	1,857	975	975	750	1,114
45,359.0	*495.0*	*495.0*	*381.0*	*565.6*	*297.0*	*297.0*	*228.6*	*339.4*
150,000	2,177	2,177	1,804	2,346	1,306	1,306	1,083	1,408
68,038.5	*663.5*	*663.5*	*550.0*	*715.2*	*398.1*	*398.1*	*330.0*	*429.1*
200,000	2,680	2,680	2,469	2,770	1,608	1,608	1,481	1,662
90,718.0	*816.8*	*816.8*	*752.5*	*844.4*	*490.1*	*490.1*	*451.5*	*506.6*
250,000	3,149	3,149	3,149	3,151	1,889	1,889	1,889	1,891
113,397.5	*959.8*	*959.8*	*959.8*	*960.4*	*575.9*	*575.9*	*575.9*	*576.2*
300,000	3,347	3,347	3,347	3,347	2,008	2,008	2,008	2,008
136,077.0	*1,020.5*	*1,020.5*	*1,020.5*	*1,020.5*	*612.3*	*612.3*	*612.3*	*612.3*
500,000	3,969	3,969	3,969	3,969	2,381	2,381	2,381	2,381
226,795.0	*1,209.9*	*1,209.9*	*1,209.9*	*1,209.9*	*725.9*	*725.9*	*725.9*	*725.9*

Table V3.E3.T1. HD 1.1 IBD and PTRD, Continued

NEWQD	IBD From:				PTRD From:			
	ECM			Other	ECM			Other
	Front[a, b]	Side[a]	Rear[c]	PES[d]	Front[e, f]	Side[e]	Rear[e]	PES[e]
(See paragraph **V3.E3.1.2.1.1.**)								
a	For NEWQD less than (<) 45,000 lbs [20,412 kg], the distance is controlled by fragments. When fragments are absent or if the HFD (1/600 ft^2 [1/55.7 m^2]) is less than the blast hazard range, then the blast criteria in this footnote may be used.							
	English equations (EQNs) (NEWQD in lbs, distance (D) in ft)							
	NEWQD $\leq$ 45,000 lbs:			$D = 35*NEWQD^{1/3}$				EQN V3.E3.T1-1
	45,000 lbs < NEWQD $\leq$ 100,000 lbs:			$D = 35*NEWQD^{1/3}$				EQN V3.E3.T1-2
	100,000 lbs < NEWQD $\leq$ 250,000 lbs:			$D = 0.3955*NEWQD^{0.7227}$				EQN V3.E3.T1-3
	250,000 lbs < NEWQD:			$D = 50*NEWQD^{1/3}$				EQN V3.E3.T1-4
	Metric EQNs (NEWQD in kg, D in m)							
	NEWQD $\leq$ 20,412 kg:			*$D = 13.88*NEWQD^{1/3}$*				*EQN V3.E3.T1-5*
	20,412 kg < NEWQD $\leq$ 45,359 kg:			*$D = 13.88*NEWQD^{1/3}$*				*EQN V3.E3.T1-6*
	45,359 kg < NEWQD $\leq$ 113,398 kg:			*$D = 0.2134*NEWQD^{0.7227}$*				*EQN V3.E3.T1-7*
	113,398 kg < NEWQD:			*$D = 19.84*NEWQD^{1/3}$*				*EQN V3.E3.T1-8*
	English EQNs (D in ft, NEWQD in lbs)							
	D $\leq$ 1,245 ft:			$NEWQD = D^3/42{,}875$				EQN V3.E3.T1-9
	1,245 ft < D $\leq$ 1,625 ft:			$NEWQD = D^3/42{,}875$				EQN V3.E3.T1-10
	1,625 ft < D $\leq$ 3,150 ft:			$NEWQD = 3.60935*D^{1.3837}$				EQN V3.E3.T1-11
	3,150 ft < D:			$NEWQD = D^3/125{,}000$				EQN V3.E3.T1-12
	Metric EQNs (D in m, NEWQD in kg)							
	D $\leq$ 379.3 m:			*$NEWQD = D^3/2{,}674.04$*				*EQN V3.E3.T1-13*
	379.3 m < D $\leq$ 495.0:			*$NEWQD = D^3/2{,}674.04$*				*EQN V3.E3.T1-14*
	495.0 m < D $\leq$ 960.3 m:			*$NEWQD = 8.4761*D^{1.3837}$*				*EQN V3.E3.T1-15*
	960.3 m < D:			*$NEWQD = D^3/7{,}809.53$*				*EQN V3.E3.T1-16*
b	IBD for frontal exposures applies to all directions from HPMs. The MCE in the HPM is used as the NEWQD. The limit on the design MCE in an HPM is 60,000 lbs [27,215 kg].							
c	For NEWQD < 100,000 lbs [45,359 kg], the distance is controlled by fragments and debris. When fragments and debris are absent or the range to a hazardous debris density of 1/600 ft^2 [1/55.7 m^2] is less than the blast hazard range, then the blast criteria in this footnote may be used.							
	English EQNs (NEWQD in lbs, D in ft)							
	NEWQD $\leq$ 100,000 lbs:			$D = 25*NEWQD^{1/3}$				EQN V3.E3.T1-17
	100,000 lbs < NEWQD $\leq$ 250,000 lbs:			$D = 0.004125*NEWQD^{1.0898}$				EQN V3.E3.T1-18
	250,000 lbs < NEWQD:			$D = 50*NEWQD^{1/3}$				EQN V3.E3.T1-19
	Metric EQNs (NEWQD in kg, D in m)							
	NEWQD $\leq$ 45,359 kg:			*$D = 9.92*NEWQD^{1/3}$*				*EQN V3.E3.T1-20*
	45,359 kg < NEWQD $\leq$ 113,398 kg:			*$D = 0.002976*NEWQD^{1.0898}$*				*EQN V3.E3.T1-21*
	113,398 kg < NEWQD:			*$D = 19.84*NEWQD^{1/3}$*				*EQN V3.E3.T1-22*
	English EQNs (D in ft, NEWQD in lbs)							
	D $\leq$ 1,160 ft:			$NEWQD = D^3/15{,}625$				EQN V3.E3.T1-23
	1,160 ft < D $\leq$ 3,150 ft:			$NEWQD = 154.2006*D^{0.91760}$				EQN V3.E3.T1-24
	3,150 ft < D:			$NEWQD = D^3/125{,}000$				EQN V3.E3.T1-25
	Metric EQNs (D in m, NEWQD in kg)							
	D $\leq$ 353.8 m:			*$NEWQD = D^3/976.19$*				*EQN V3.E3.T1-26*
	353.8 m < D $\leq$ 960.3 m:			*$NEWQD = 208.0623*D^{0.91760}$*				*EQN V3.E3.T1-27*
	960.3 m < D:			*$NEWQD = D^3/7{,}809.53$*				*EQN V3.E3.T1-28*

Table V3.E3.T1. HD 1.1 IBD and PTRD, Continued

(See paragraph **V3.E3.1.2.1.1.**)			
d	For NEWQD < 30,000 lbs [13,608 kg], the distance is controlled by fragments and debris. Lesser distances may be permitted for certain situations.		
	English EQNs (NEWQD in lbs, D in ft)		
	30,000 lbs < NEWQD ≤ 100,000 lbs:	$D = 40*NEWQD^{1/3}$	EQN V3.E3.T1-29
	100,000 lbs < NEWQD ≤ 250,000 lbs:	$D = 2.42*NEWQD^{0.577}$	EQN V3.E3.T1-30
	250,000 lbs < NEWQD:	$D = 50*NEWQD^{1/3}$	EQN V3.E3.T1-31
	Metric EQNs (NEWQD in kg, D in m)		
	13,608 kg < NEWQD ≤ 45,359 kg:	$D = 15.87*NEWQD^{1/3}$	*EQN V3.E3.T1-32*
	45,359 kg < NEWQD ≤ 113,398 kg:	$D = 1.1640*NEWQD^{0.577}$	*EQN V3.E3.T1-33*
	113,398 kg < NEWQD:	$D = 19.84*NEWQD^{1/3}$	*EQN V3.E3.T1-34*
	English EQNs (D in ft, NEWQD in lbs)		
	1,243 ft < D ≤ 1,857 ft:	$NEWQD = D^3/64{,}000$	EQN V3.E3.T1-35
	1,857 ft < D ≤ 3,150 ft:	$NEWQD = 0.2162*D^{1.7331}$	EQN V3.E3.T1-36
	3,150 ft < D:	$NEWQD = D^3/125{,}000$	EQN V3.E3.T1-37
	Metric EQNs (D in m, NEWQD in kg)		
	378.6 m < D ≤ 565.6 m:	$NEWQD = D^3/3{,}989.42$	*EQN V3.E3.T1-38*
	565.6 m < D ≤ 960.3 m:	$NEWQD = 0.7686*D^{1.7331}$	*EQN V3.E3.T1-39*
	960.3 m < D:	$NEWQD = D^3/7{,}809.53$	*EQN V3.E3.T1-40*
e	Computed as 60 percent of applicable IBD.		
f	PTRD applies to all directions from an HPM. The MCE in the HPM is used as the NEWQD.		

Table V3.E3.T2. HD 1.1 HFD[a, b]

NEWQD	Open[c, d]	Structure[e, f]
(lbs)	(ft)	(ft)
[kg]	*[m]*	*[m]*
≤ 0.5	236	200
< 0.23	*71.9*	*61.0*
0.7	263	200
0.3	*80.2*	*61.0*
1	291	200
0.45	*88.8*	*61.0*
2	346	200
0.91	*105.5*	*61.0*
3	378	200
1.4	*115.3*	*61.0*
5	419	200
2.3	*127.7*	*61.0*
7	445	200
3.2	*135.6*	*61.0*
10	474	200
4.5	*144.4*	*61.0*
15	506	200
6.8	*154.2*	*61.0*
20	529	200
9.1	*161.1*	*61.0*
30	561	200
13.6	*170.9*	*61.0*
31	*563.0*	200
14.1	*171.7*	*61.0*
50	601	388
22.7	*183.2*	*118.2*
70	628	519
31.8	*191.3*	*158.1*
100	658	658
45.4	*200.4*	*200.4*
150	815	815
68.0	*248.5*	*248.5*
200	927	927
90.7	*282.6*	*282.6*
300	1,085	1,085
136.1	*330.6*	*330.6*
450	1,243	1,243
204.1	*378.7*	*378.7*
> 450	1,250	1,250
>204.1	*381.0*	*381.0*

Table V3.E3.T2. HD 1.1 HFD,[a, b] Continued

See paragraph **V3.E3.1.2.1.1.**			
a	Use of equations given in Footnotes c through f to determine other HFD-NEWQD combinations is allowed.		
b	PTRD is 60 percent of HFD.		
c	English EQNs (NEWQD in lbs, HFD in ft; ln is natural logarithm)		
	NEWQD < 100 lbs:	HFD = 291.3 + [79.2*ln(NEWQD)], with a minimum distance of 236 ft	EQN V3.E3.T2-1
	NEWQD ≥ 100 lbs:	HFD = -1133.9 + [389*ln(NEWQD)]	EQN V3.E3.T2-2
	Metric EQNs (NEWQD in kg, HFD in m; ln is natural logarithm)		
	NEWQD < 45.4 kg:	*HFD = 107.87 + [24.14*ln(NEWQD)],with a minimum distance of 71.9 m*	*EQN V3.E3.T2-3*
	NEWQD > 45.4 kg:	*HFD = -251.87 + [118.56*ln(NEWQD)]*	*EQN V3.E3.T2-4*
d	English EQNs (NEWQD in lbs, HFD in ft; exp [x] is e^x)		
	HFD < 658 ft:	NEWQD = exp [(HFD/79.2) – 3.678]	EQN V3.E3.T2-5
	658 ft ≤ HFD < 1,250 ft:	NEWQD = exp [(HFD/389) + 2.914]	EQN V3.E3.T2-6
	Metric EQNs (NEWQD in kg, HFD in m; exp [x] is e^x*)*		
	HFD < 200.5 m:	*NEWQD = exp [(HFD/24.14) – 4.4685]*	*EQN V3.E3.T2-7*
	200.5 m < HFD < 381 m:	*NEWQD = exp [(HFD/118.56) + 2.1244]*	*EQN V3.E3.T2-8*
e	English EQNs (NEWQD in lbs, HFD in ft; ln is natural logarithm)		
			EQN V3.E3.T2-9
	NEWQD ≤ 31 lbs:	HFD = 200 ft	
	31 lbs < NEWQD ≤ 450 lbs:	HFD = -1133.9 + [389*ln(NEWQD)]	
	Metric EQNs (NEWQD in kg, HFD in m; ln is natural logarithm)		
			EQN V3.E3.T2-10
	NEWQD ≤ 14.1 kg:	*HFD = 61.0 m*	
	14.1 kg < NEWQD < 204.1 kg:	*HFD = -251.87 + [118.56*ln(NEWQD)]*	
f	English EQNs (NEWQD in lbs, HFD in ft; exp [x] is e^x)		
	HFD ≤ 200 ft:		
	200 ft < HFD ≤ 1,250 ft:		EQN V3.E3.T2-11
		NEWQD ≤ 31 lbs	
		NEWQD = exp [(HFD/389) + 2.914]	
	Metric EQNs (NEWQD in kg, HFD in m; exp [x] is e^x*)*		
			EQN V3.E3.T2-12
	HFD ≤ 61.0 m:	*NEWQD ≤ 14.1 kg*	
	61.0 m < HFD < 381.0 m:	*NEWQD = exp [(HFD/118.56) + 2.2144]*	

Table V3.E3.T3. HFD for Open Stacks of Selected HD 1.1 AEa

Nomenclature	Number of Units									
	1	2	3	4	5	6	7	8	9	10
	(ft)	(ft)	(ft)	(ft)	(ft)	(ft)	(ft)	(ft)	(ft)	(ft)
	[m]	*[m]*	*[m]*	*[m]*	*[m]*	*[m]*	*[m]*	*[m]*	*[m]*	*[m]*
Sparrow, AIM-7[b]	280	565	770	955	1,120	1,245				
	85.3	*172.2*	*234.7*	*291.1*	*341.4*	*379.5*				
Sidewinder, AIM-9	400	400	400	400	400	400	400	400	400	400[c]
	121.9	*121.9*	*121.9*	*121.9*	*121.9*	*121.9*	*121.9*	*121.9*	*121.9*	*121.9[c]*
Chaparral, MIM-72H	400	400	400	400	400	400	400	400	400	400[c]
	121.9	*121.9*	*121.9*	*121.9*	*121.9*	*121.9*	*121.9*	*121.9*	*121.9*	*121.9[c]*
Maverick, AGM 65 A/B/D	400	500	500							
	121.9	*152.4*	*152.4*							
Maverick, AGM 65 E/F/G	670	900[d]	1,200[d]							
	204.2	*274.3[d]*	*365.8[d]*							
Anti-Submarine Rocket (ASROC)	500	500	500							
	152.4	*152.4*	*152.4*							
Cluster Bomb Unit-87[e]	800	800	910	945	965	982	1,000	1,020	1,035	1,055[f]
	243.8	*243.8*	*277.4*	*288.0*	*291.4*	*299.3*	*304.8*	*310.9*	*315.5*	*321.6[f]*
Improved Hawk	900	900	900	900	900	900	900	900	900	900[c]
	274.3	*274.3*	*274.3*	*274.3*	*274.3*	*274.3*	*274.3*	*274.3*	*274.3*	*274.3[c]*
Penguin[e]	500	500	500							
	152.4	*152.4*	*152.4*							
Projectile, 105 millimeter (mm)[g]	340	355	525	660	725	775	810	845	870	890[f]
	103.6	*108.2*	*160.0*	*201.2*	*221.0*	*236.2*	*246.9*	*257.6*	*265.2*	*271.3[f]*
Projectile, 155 mm	415	590	770	955	1,035	1,095	1,145	1,195	1,235	
	126.5	*179.8*	*234.7*	*291.1*	*315.5*	*333.8*	*349.0*	*364.2*	*376.4*	
Projectile, 5 inch/54	300	375	475	570	680	790	860	925	1,005	1,085
	91.4	*114.3*	*144.8*	*173.7*	*207.3*	*240.8*	*262.1*	*281.9*	*306.3*	*330.7*
Harpoon[e]	500	600[h]	600[h]	600[h]						
	152.4	*182.9[h]*	*182.9[h]*	*182.9[h]*						
Tomahawk[e]	500	600[h]	600[h]	600[h]						
	152.4	*182.9[h]*	*182.9[h]*	*182.9[h]*						
Tomahawk Loading on a Submarine, Guided Missile, Nuclear-Powered (SSGN)[i]	750									
	228.6									
Bomb, 500-pound, MK 82	670									
	204.2									
Bomb, 1,000-pound, MK 83	815									
	248.4									
Bomb, 2,000-pound, MK 84	925									
	281.9									
Bomb, BLU-109	880									
	268.2									
Bomb, 750-pound, M117	690									
	210.3									

Table V3.E3.T3. HFD for Open Stacks of Selected HD 1.1 AE,[a] Continued

Nomenclature	Number of Units									
	1	2	3	4	5	6	7	8	9	10
	(ft)	(ft)	(ft)	(ft)	(ft)	(ft)	(ft)	(ft)	(ft)	(ft)
	[m]	*[m]*	*[m]*	*[m]*	*[m]*	*[m]*	*[m]*	*[m]*	*[m]*	*[m]*
Torpedo, MK 46	500	500	500	500	500	500	500	500		
	152.4	*152.4*	*152.4*	*152.4*	*152.4*	*152.4*	*152.4*	*152.4*		
Torpedo, MK 48 [j, k] (2½-ton truck, or larger, unshielded)	630	775	875	925						
	192.0	*236.2*	*266.7*	*281.9*						
Torpedo, MK 48[j, l] (Shielded, or other means of transport)	500	500	550	600	635	670	700	725	755	780[f]
	152.4	*152.4*	*167.6*	*182.9*	*193.5*	*204.2*	*213.4*	*221.0*	*230.1*	*237.7*[f]

a	All of the HFDs in this table may be applied to both packaged and unpackaged configurations.
b	Those items with a WAU-17 warhead.
c	Ten units or more until the point is reached at which this distance is exceeded by the distance requirements of Table **V3.E3.T1.**
d	Use the distance shown only where there are less than 25 unrelated people exposed in any arc encompassing 45 degrees from 900 ft [274 m] to 1,250 ft [381 m] from the PES.
e	HFDs include fragments from shipping or storage container(s).
f	More than 10 units may be involved before 1,250 ft [381 m] is exceeded. For distances involving more than 10 units, consult the applicable Service guidance.
g	105-mm projectiles and 105-mm complete rounds not in standard storage or shipping containers are HD 1.1.
h	When handling more than one missile, the missiles must be transported or handled in a nose-to-tail configuration and in their launch capsule or shipping container; furthermore, they must be aligned and handled so that each group of two missiles is located outside of the warhead fragment beam spray region of the other two missiles.
i	Handling is limited to one launch tube at a time, with other tubes closed; risks associated with possible propagation from the Tomahawk being handled to all other AE in the SSGN, as well as to AE in nearby combatant ships and boats, must be assumed by the Navy in accordance with an appropriate deviation from these standards. If handling is not limited to one launch tube at a time, with other tubes closed, the NEW of the full SSGN load will apply for siting in accordance with this manual. The reduced QD arc is drawn from the tube. Pier-side staging areas must be sited; however, the reduced QD in this table for Tomahawk missiles may be used, provided the restrictions of Footnote h are applied.
j	All models, including Advanced Capability.
k	These distances must be used when handling torpedo(es) from 2½-ton trucks (or larger) where sandbag (or other equivalent) shielding (as described in Footnote l) is not present between the leading edge of the torpedo(es) warhead and the truck crew cab to prevent the crew cab and windshield from contributing to the debris.
l	These distances may be used when handling torpedo(es) from: 1. 2½-ton trucks (or larger) with sandbag (or other equivalent) shielding between the leading edge of the torpedo(es) warhead and the truck crew cab to prevent the crew cab and windshield from contributing to the debris (sandbag shield requirement is equivalent to a minimum thickness of 2 ft [0.61 m] of sand between the truck crew cab and the torpedo(es). The sandbags must shield all parts of the crew cab and windshield from the torpedo warhead.); or 2. Other means of transport such as flatbed trailers, boats, torpedo transporters, forklifts, or portable cranes.

Table V3.E3.T3.1. (Added)(AF) HFD for Open Stacks of Selected HD 1.1 AE[a] (AMRAAM, AIM-120/WDU-33/B and WDU-41/B)

Nomenclature	Number of Units									
	1	2	3	4	5	6	7	8	9	10
	(ft)	(ft)	(ft)	(ft)	(ft)	(ft)	(ft)	(ft)	(ft)	(ft)
	[m]	*[m]*	*[m]*	*[m]*	*[m]*	*[m]*	*[m]*	*[m]*	*[m]*	*[m]*
AMRAAM, AIM-120/WDU-33/B	280	600	650	700	725	750	775	800	b	b
	85.3	*182.9*	*198.1*	*213.4*	*221.0*	*228.6*	*236.2*	*243.8*		
AMRAAM, AIM-120/WDU-41/B	335	600	650	700	725	750	775	800	b	b
	102.1	*182.9*	*198.1*	*213.4*	*221.0*	*228.6*	*236.2*	*243.8*		

a	All of the HFDs in this table may be applied to both packaged and unpackaged configurations.
b	Consult AFSEC/SEW for distances involving more than 8 units.

V3.E3.1.2.1.1.2. For HD 1.1 NEWQDs in the range 451 to 30,000 lbs [205 to 13,608 kg], HFD is determined according to the criteria in paragraphs **V3.E3.1.2.1.1.2.1.** through **V3.E3.1.2.1.1.2.7.** PTRD is 60 percent of the specified HFD, and ILD must be in accordance with paragraph **V3.E3.1.4.**

V3.E3.1.2.1.1.2.1. The minimum HFD must be 1,250 ft [381 m], as shown in Table **V3.E3.T1.** Lesser distances are permitted if supported by a structural analysis. Facilities sited at 1,235 ft [376 m] or 1,245 ft [380 m] in accordance with past standards will be considered to be in compliance with the 1,250 ft [381 m] minimum requirement.

V3.E3.1.2.1.1.2.2. For HD 1.1 in a 7-Bar or a 3-Bar ECM, use ECM distances shown in Table **V3.E3.T1.**, as discussed in paragraph **V3.E3.1.3.**

V3.E3.1.2.1.1.2.3. For HD 1.1 in an Undefined ECM where the loading density is ≤ 0.028 lbs/ft^3 [0.449 kg/m^3], use ECM distances shown in Table **V3.E3.T1.**, as discussed in paragraph **V3.E3.1.3.**

V3.E3.1.2.1.1.2.4. For HD 1.1 in an Undefined ECM with minimum internal dimensions of 26 ft [7.92 m] wide and 60 ft [18.29 m] long, use "ECM side and rear" distances of Table **V3.E3.T1.** and "Other PES" distances of Table **V3.E3.T1.** for the front exposure.

V3.E3.1.2.1.1.2.5. For HD 1.1 in an Undefined ECM where the loading density is > 0.028 lbs/ft^3 [0.449 kg/m^3] and internal dimensions are less than 26 ft [7.92 m] wide and 60 ft [18.29 m] long, use "Other PES" distances of Table **V3.E3.T1.** for front, side, and rear exposures.

V3.E3.1.2.1.1.2.6. Selected items have been evaluated for minimum HFD with results shown in Table **V3.E3.T3.** Other items, through testing, have been hazard classified with a specific HFD presented in the format HD (xx)1.1. The HFD for these items is specified in hundreds of feet (in parentheses), and they may not be listed in Table **V3.E3.T3.** The distances for these two categories of select items apply only to items in the open. When these items are

placed in a facility, apply the criteria of paragraphs **V3.E3.1.2.1.1.2.1.** through **V3.E3.1.2.1.1.2.5.** as appropriate.

V3.E3.1.2.1.1.2.7. For bare explosives in the open, distance is computed by the formula $D = 40W^{1/3}$ [$15.87Q^{1/3}$].

V3.E3.1.2.1.1.2.8. **(Added)(AF)** For exposures not requiring fragment protection per paragraph **V3.E3.1.2.1.3.**, IBD is K40; PTRD is 60 percent of the specified IBD.

V3.E3.1.2.1.1.3. For HD 1.1 NEWQDs > 30,000 lbs [13,608 kg] HFD will be in accordance with Table **V3.E3.T1.** Lesser distances are permitted if supported by a structural analysis. PTRD is 60 percent of HFD and ILD must be in accordance with paragraph **V3.E3.1.4.** The following apply to use of the reduced ECM distances shown in Table **V3.E3.T1.** for the NEW range between 30,000 lbs [13,608 kg] and 250,000 lbs [113,398 kg]:

V3.E3.1.2.1.1.3.1. For HD 1.1 in a 7-Bar or a 3-Bar ECM where internal dimensions are a minimum of 26 ft [7.92 m] wide and 60 ft [18.29 m] long, use ECM distances shown in Table **V3.E3.T1.**

V3.E3.1.2.1.1.3.2. For HD 1.1 in a 7-Bar or a 3-Bar ECM where internal dimensions are less than 26 ft [7.92 m] wide and 60 ft [18.29 m] long, use "Other PES" distances of Table **V3.E3.T1.** for front, side, and rear exposures.

V3.E3.1.2.1.1.3.3. For HD 1.1 in an Undefined ECM where internal dimensions are a minimum of 26 ft [7.92 m] wide and 60 ft [18.29 m] long, use "ECM side and rear" distances of Table **V3.E3.T1.** and "Other PES" distances of Table **V3.E3.T1.** for the front exposure.

V3.E3.1.2.1.1.3.4. For HD 1.1 in an Undefined ECM where internal dimensions are < 26-ft [7.92 m] wide and 60-ft [18.29 m] long, use "Other PES" distances of Table **V3.E3.T1.** for front, side, and rear exposures.

V3.E3.1.2.1.1.3.5. **(Added)(AF)** HD 1.1 ILD. Table **V3.E3.T17.** provides a summary matrix of all the paired relationships for HD 1.1.

V3.E3.1.2.1.1.3.6. **(Added)(AF)** For HD 1.1 in a structure (excluding ECM) or in the open, use the Other PES IBD and PTRD distances as shown in Table **V3.E3.T1.** However, if the item has a parenthetical fragment distance that is greater than 1,250 feet, use the parenthetical fragment distance as the IBD; PTRD is 60 percent of the specified IBD.

V3.E3.1.2.1.1.3.7. **(Added)(AF)** For exposures not requiring fragment protection per paragraph **V3.E3.1.2.1.3.**, IBD is K40/50 as described in Table **V3.E3.T1.**, Note d. PTRD is 60 percent of the specified IBD.

V3.E3.1.2.1.1.4. For sparsely populated locations (i.e., no more than 25 persons located in any sector bounded by the sides of a 45-degree angle, with the vertex at the PES, and

the 900-ft [274-m] and 1,250-ft [381-m] arcs from the PES), the minimum 1,250-ft [381-m] fragment distance may be reduced to 900 ft [274 m] if the NEWQD of the PES does not exceed 11,400 lbs [5,171 kg]. These minimum fragment distance reductions may not be applied to PTRs, even those to which IBD is required, such as a joint DoD–non-DoD use runway, or a high traffic density road.

V3.E3.1.2.1.1.4. **(Added)(AF)** Prior to implementation contact AFSEC/SEW.

V3.E3.1.2.1.1.5. For PTRs, the minimum fragment distance for HD 1.1 AE is based on the traffic density considered at three levels: high, medium, and low. The traffic density is averaged over a normal (non-holiday) week in terms of number of passengers during a 24-hour period. Minimum fragment distance reductions based on sparse population considerations addressed in paragraph **V3.E3.1.2.1.1.4.** do not apply to PTRs, even those to which IBD is required, such as a joint DoD–non-DoD use runway, or a high traffic density road. In applying criteria other than the default values given in paragraphs **V3.E3.1.2.1.1.5.1.** through **V3.E3.1.2.1.1.5.3.** (which are based on car (and rail) speed of 50 miles per hour (mph) [80 kilometers per hour (kph)], and a ship speed of 10 mph [16 kph]), other applicable considerations must be taken into account to establish exposure levels. Examples of other considerations include: speed of vehicles, number of passengers per vehicle, protection afforded by the vehicle, variation in daily traffic levels in relation to AE activities, and seasonal traffic trends. The default value of two passengers per car may be used to estimate traffic density.

V3.E3.1.2.1.1.5. **(Added)(AF)** For HD 1.1 and 1.2, PTRD is normally 60 percent of IBD. For HD 1.3 and 1.4, PTRD is the same as IBD.

V3.E3.1.2.1.1.5.1. High-Traffic Density. If routes have 10,000 or more car or rail passengers per day, or 2,000 or more ship passengers per day, then IBD criteria apply.

V3.E3.1.2.1.1.5.2. Medium-Traffic Density. If routes have between 400 and 10,000 car or rail passengers per day, or between 80 and 2,000 ship passengers per day, 60 percent of the specified minimum fragment distance for IBD applies. At a minimum, these criteria apply to any recreational activity that is extensive and occurs on a regular basis.

V3.E3.1.2.1.1.5.3. Low-Traffic Density. If routes have fewer than 400 car or rail passengers per day, or fewer than 80 ship passengers per day, no minimum fragment distance is required. Minimum distance is 60 percent of IBD based on blast criteria only.

V3.E3.1.2.1.1.5.4. Other Exposures. For other exposures that are permitted at PTRD, fragment distance minimums for HD 1.1 AE are at least 60 percent of the specified minimum fragment distance for IBD.

V3.E3.1.2.1.2. Minimum fragment distances apply to:

V3.E3.1.2.1.2.1. An installation's boundary, unless the area outside the boundary naturally prohibits access or is government land that is not open to the public. When a QD arc extends beyond an installation's boundary and this exclusion applies, the DoD Component will

certify IBD protection need not be applied to the encumbered area and establish procedures to monitor the area for any change in status.

V3.E3.1.2.1.2.2. Administration and housing areas.

V3.E3.1.2.1.2.3. Recreation facilities (e.g., baseball diamonds, golf courses, and volleyball courts). Paragraph **V3.E3.1.2.1.3.1.** describes situations where minimum fragment distances do not apply to recreational facilities.

V3.E3.1.2.1.2.4. Flight-line passenger service functions (e.g., terminal buildings).

V3.E3.1.2.1.2.5. Main powerhouses that provide vital utilities to a major portion of an installation.

V3.E3.1.2.1.2.6. Inert storage and shops that, by reason of their vital strategic nature or high intrinsic value of their contents, should not be placed at risk.

V3.E3.1.2.1.2.7. Functions that, if momentarily put out of action, would cause an immediate secondary hazard by reason of their failure to function.

V3.E3.1.2.1.2.8. Private vehicles parked in administrative areas.

V3.E3.1.2.1.3. Examples when minimum fragment and firebrand distances need not apply are:

V3.E3.1.2.1.3.1. Recreation or training facilities, when such facilities are located near AE support operations and are used by off-duty military or on-duty military or DoD civilians or contractors (e.g., munitions workers, security guards, and firefighters) who directly support these AE operations.

V3.E3.1.2.1.3.2. Related and support DoD-controlled functions for which IMD and ILD would normally apply.

V3.E3.1.2.1.3.3. Maintenance, supply, training facilities, and operations offices for logistical or operational support of combat aircraft, battalion-size or smaller delivery or AE supply units, separate air defense firing batteries, or a single pier or wharf for which the AE in a PES is intended.

V3.E3.1.2.1.3.4. Between a PES and inert storage, whether in a facility or in the open.

V3.E3.1.2.1.3.5. Between facilities in an operating line, between operating lines, and between operating lines and storage locations.

V3.E3.1.3. IBD and PTRD. Paragraph **V3.E3.1.2.1.1.** specifies required separation distances to inhabited buildings and PTRs for ECMs and other types of PESs containing HD 1.1.

Permissible exposures at these distances are listed in paragraphs **V3.E3.1.1.4.** through **V3.E3.1.1.6.**

V3.E3.1.3. **(Added)(AF)** Table **V3.E3.T17.** provides a summary matrix of all the paired relationships for HD 1.1.

V3.E3.1.3.1. ECM. Specified separations from ECMs consider reductions in blast overpressure attributable to the earth cover of ECMs, when the earth cover has a minimum thickness of 2 ft [0.61 m]. See paragraph **V3.E3.1.2.1.1.** for application of the ECM distances in Table **V3.E3.T1.** to 7-Bar, 3-Bar, and Undefined ECMs. Descriptions of "front," "side," and "rear" for ECMs follow and are illustrated in Figure **V3.E3.F1.** in the appendix to this enclosure.

V3.E3.1.3.1**. (Added)(AF)** Hazard Zones for ECMs and HASs. QD criteria for ECMs and HASs are dependent upon the orientation of these PESs. The QD criteria in this manual refer to "front," "side," and "rear" relationships for ECMs and HASs.

V3.E3.1.3.1.1. The forward sector, or "front," of an ECM is that area 60 degrees either side of the ECM's centerline (120 degrees combined angle), with the vertex of the angle placed so that the sides of the angle pass through the intersection of the headwall and sidewalls.

V3.E3.1.3.1.2. The rear sector, or "rear," of an ECM is that area 45 degrees either side of the magazine centerline (90 degrees combined angle) with the vertex of the angle placed so that the sides of the angle pass through the intersection of the rear and side walls.

V3.E3.1.3.1.3. All other orientations are considered "side" sectors.

V3.E3.1.3.1.4. **(Added)(AF)** Use Figures **V3.E3.F1.** through **V3.E3.F7.** to determine ECM to ECM orientation effects on IMD.

V3.E3.1.3.1.5. **(Added)(AF)** Use Figure **V4.E3.F1.** to determine whether an ES is exposed to the front, side or rear of a HAS.

V3.E3.1.3.2. HPM. Testing has shown that the design of the earth-bermed HPM attenuates pressures relative to an unconfined surface burst similar to that indicated in paragraph **V3.E3.1.3.1.** for an ECM. The following pertain to siting of an HPM:

V3.E3.1.3.2.1. An HPM has a "front" sector and a "side" sector. The definition of "front" for an ECM in paragraph **V3.E3.1.3.1.1.** also applies to an HPM. All other orientations are considered "side" sectors. Figure **V3.E3.F2.** in the appendix to this enclosure illustrates the sectors associated with an HPM. An HPM has no "rear" sector.

V3.E3.1.3.2.2. The values shown in Table **V3.E3.T1.** for front exposure from an ECM also apply to the front of an HPM.

V3.E3.1.3.2.3. The values shown in Table **V3.E3.T1.** for side exposure from an ECM apply to the remainder (all but the front) of an HPM.

V3.E3.1.4. ILD. Separation distances required between AE and non-AE buildings and sites within an AE operating line are listed for various quantities of HD 1.1 AE in Table **V3.E3.T4.** Permissible exposures at ILD are listed in paragraphs **V3.E3.1.1.1.** (barricaded ILD) and **V3.E3.1.1.2.** (unbarricaded ILD). In order to apply barricaded ILD, barricades must comply with paragraph **V2.E5.4.2.3.** The separation distance between an operating building and its service magazine is based on the NEWQD and the HD of the AE in the magazine and not that in other parts of the operating line.

V3.E3.1.4. **(Added)(AF)** This is the minimum distance required to protect activities associated with explosives storage and operations. Applying ILD recognizes the operational need for some people to be in the proximity of explosives while at the same time preserving some mission capability in the event of an explosives accident. Unhardened facilities at this distance will be extensively damaged and occupants may be severely injured (see **Volume 1 – Enclosure 8** for reaction effects). In addition to the minimal protection to related activities, ILD should prevent propagation between two explosives locations. At ILD, no propagation from the blast overpressure is expected, and the probability of propagation from low angle, high velocity fragments is significantly reduced. For HD 1.1 and 1.2, ILD is normally 36 percent of IBD.

V3.E3.1.4.1. ILD From ECM. Testing has shown that some attenuation of airblast overpressure relative to an unconfined surface burst occurs out the sides and rear of an ECM and a slight increase occurs out the front of an ECM. The equivalent $9W^{1/3}$ [$3.57Q^{1/3}$] (12 psi [82.7 kPa] (barricaded)) and $18W^{1/3}$ [$7.14\ Q^{1/3}$] (3.5 psi [24 kPa] (unbarricaded)) ILD from an ECM, when accounting for this attenuation, are given in Table **V3.E3.T5.** Airblast forms the bases for the equations given in the footnotes for Table **V3.E3.T5.**

V3.E3.1.4.2. Barricaded ILD From an ECM. Paragraph **V3.E3.1.5.4.** provides criteria for the application of barricaded ILD from an ECM.

V3.E3.1.4.2.1. **(Added)(AF)** Unbarricaded ILD from Other than an ECM. The unbarricaded ILD from all PESs other than ECMs is as shown in Table **V3.E3.T4.** for exposures permitted at unbarricaded ILD per paragraph **V3.E3.1.1.2.2.1.** Per paragraph **V3.E3.1.1.2.2.5.**, some hardened structures may be sited at a reduced unbarricaded ILD.

V3.E3.1.4.2.2. **(Added)(AF)** Barricaded ILD from Other than an ECM. The barricaded ILD from all PESs other than ECMs is as shown in Table **V3.E3.T4.** for exposures permitted at barricaded ILD per paragraph **V3.E3.1.1.** Use of barricaded ILD requires that a properly constructed, intervening barricade be located between the ES and the PES per section **V2.E5.4.**

V3.E3.1.4.3. ILD From HPM. The values shown in Table **V3.E3.T5.** for front exposure from an ECM also apply to front exposures from an HPM. The values shown in Table **V3.E3.T5.** for side exposure from an ECM apply to all other orientations of an HPM. The side of an HPM is considered barricaded, provided the earth barricading complies with the design drawing.

V3.E3.1.5. IMD. Magazines for HD 1.1 will be separated one from another in accordance with Tables **V3.E3.T6.**, **V3.E3.T7.**, and **V3.E3.T8.** Table **V3.E3.T6.** provides orientation relationships for ECM and Tables **V3.E3.T7.** and **V3.E3.T8.** provide the actual separation distances.

V3.E3.1.5. **(Added)(AF)** This is the minimum distance between PESs to prevent one PES from simultaneously detonating an adjacent PES. Maintaining IMD is no guarantee that propagation from one PES to another will not occur, only that they will not simultaneously detonate. At this distance, severe structural damage approaching total destruction is expected for conventional structures, and severe personnel injury or death is expected (see **Volume 1 – Enclosure 8** for reaction effects). ECMs provide significant protection at IMD; maintaining IMD between ECMs will provide virtually complete protection of AE against the propagation effects of an explosion. However, AE in adjacent ECMs may be damaged (see paragraph **V1.E8.2.1.4.3.**). When less than required IMD exists between any two or more PESs, add the quantities of explosives in these locations to form a single PES encompassing the area and NEWQDs of the PESs not meeting IMD. For this reason, do not waive any separation between explosives locations less than IMD. IMD from magazines is as shown in Table **V3.E3.T17.**

V3.E3.1.5.1. Siting Rules. For examples of siting rules for various magazine orientations see Figures **V3.E3.F1.** through **V3.E3.F8.** in the appendix to this enclosure.

V3.E3.1.5.2. Barricaded IMD From ECM. Paragraph **V3.E3.1.5.4.** provides criteria for the application of barricaded IMD from ECM.

V3.E3.1.5.3. Other Factors Limiting ECM Storage. Other factors limiting ECM storage include:

V3.E3.1.5.3.1. Quantities above 500,000 lbs [226,795 kg] NEWQD in one ECM are not authorized, except for energetic liquids.

V3.E3.1.5.3.2. The 7-ft [2.1-m] separation distance given in Table **V3.E3.T7.** for 100 lbs [45.4 kg] NEWQD constitutes the minimum side-to-side magazine separation distance.

Table V3.E3.T4. HD 1.1 ILD

NEWQD	Barricaded Distance[a]	Unbarricaded Distance[b]
(lbs)	(ft)	(ft)
[kg]	*[m]*	*[m]*
50[c]	33	66
22.7[c]	*10.1*	*20.2*
70	37	74
31.8	*11.3*	*22.6*
100	42	84
45.4	*12.7*	*25.5*
150	48	96
68.0	*14.6*	*29.1*
200	53	105
90.7	*16.0*	*32.1*
300	60	120
136.1	*18.4*	*36.7*
500	71	143
226.8	*21.8*	*43.5*
700	80	160
317.5	*24.4*	*48.7*
1,000	90	180
453.6	*27.4*	*54.9*
1,500	103	206
680.4	*31.4*	*62.8*
2,000	113	227
907.2	*34.6*	*69.1*
3,000	130	260
1,360.8	*39.6*	*79.1*
5,000	154	308
2,268.0	*46.9*	*93.8*
7,000	172	344
3,175.1	*52.5*	*104.9*
10,000	194	388
4,535.9	*59.1*	*118.2*
15,000	222	444
6,803.9	*67.6*	*135.3*
20,000	244	489
9,071.8	*74.5*	*148.9*
30,000	280	559
13,607.7	*85.2*	*170.5*
50,000	332	663
22,679.5	*101.1*	*202.1*

Table V3.E3.T4. HD 1.1 ILD, Continued

NEWQD	Barricaded Distance[a]	Unbarricaded Distance[b]
(lbs)	(ft)	(ft)
[kg]	*[m]*	*[m]*
70,000	371	742
31,751.3	*113.0*	*226.1*
100,000	418	835
45,359.0	*127.3*	*254.6*
150,000	478	956
68,038.5	*145.7*	*291.5*
200,000	526	1,053
90,718.0	*160.4*	*320.8*
300,000	602	1,205
136,077.0	*183.6*	*367.2*
500,000[d]	714	1,429
226,795.0[d]	*217.7*	*435.4*
700,000	799	1,598
317,513.0	*243.6*	*487.1*
1,000,000	900	1,800
453,590.0	*274.3*	*548.6*
1,500,000	1,030	2,060
680,385.0	*314.0*	*628.0*
2,000,000	1,134	2,268
907,180.0	*345.6*	*691.2*
3,000,000	1,298	2,596
1,360,770.0	*395.6*	*791.2*
5,000,000	1,539	3,078
2,267,950.0	*469.0*	*938.1*

Table V3.E3.T4. HD 1.1 ILD, Continued

a	English EQNs (D in ft, NEWQD in lbs)	
	$D = 9*NEWQD^{1/3}$	EQN V3.E3.T4-1
	$NEWQD = D^3/729$	EQN V3.E3.T4-2
	Metric EQNs (D in m, NEWQD in kg)	
	$D = 3.57*NEWQD^{1/3}$	*EQN V3.E3.T4-3*
	$NEWQD = D^3/45.511$	*EQN V3.E3.T4-4*
b	English EQNs (D in ft, NEWQD in lbs)	
	$D = 18*NEWQD^{1/3}$	EQN V3.E3.T4-5
	$NEWQD = D^3/5{,}832$	EQN V3.E3.T4-6
	Metric EQNs (D in m, NEWQD in kg)	
	$D = 7.14*NEWQD^{1/3}$	*EQN V3.E3.T4-7*
	$NEWQD = D^3/364.086$	*EQN V3.E3.T4-8*
c	For less than 50 lbs [22.7 kg], less distance may be used when structures, blast mats, and the like can completely contain fragments and debris. This table is not applicable when blast, fragments, and debris are completely confined, as in certain test firing barricades. **(Added)(AF)** Continue using K18 without a minimum distance for specific situations having approved guidance such as Reduced MCEs for F-15 or F-16 Aircraft (UFC 3-340-02 may be used to prove complete confinement of blast, fragments, and debris).	
d	Quantities above 500,000 lbs [226,795 kg] NEWQD are authorized only for HD 1.1 energetic liquids.	

Table V3.E3.T5. HD 1.1 ILD from ECM

NEWQD	Barricaded Distance			Unbarricaded Distance		
	Front[a]	Side[b]	Rear[c]	Front[d]	Side[e]	Rear[f]
(lbs)	(ft)	(ft)	(ft)	(ft)	(ft)	(ft)
[kg]	*[m]*	*[m]*	*[m]*	*[m]*	*[m]*	*[m]*
50	37	26	22	66	59	44
22.7	*11.2*	*7.9*	*6.7*	*20.2*	*18.0*	*13.5*
70	41	29	25	74	66	49
31.8	*12.6*	*8.8*	*7.5*	*22.6*	*20.1*	*15.1*
100	46	32	28	84	74	56
45.4	*14.2*	*9.9*	*8.5*	*25.5*	*22.6*	*17.0*
150	53	37	32	96	85	64
68.0	*16.2*	*11.3*	*9.7*	*29.1*	*25.9*	*19.4*
200	58	41	35	105	94	70
90.7	*17.8*	*12.5*	*10.7*	*32.1*	*28.5*	*21.4*
300	67	47	40	120	107	80
136.1	*20.4*	*14.3*	*12.2*	*36.7*	*32.7*	*24.5*
500	79	56	48	143	127	95
226.8	*24.2*	*17.0*	*14.5*	*43.5*	*38.7*	*29.0*
700	89	62	53	160	142	107
317.5	*27.1*	*19.0*	*16.2*	*48.7*	*43.3*	*32.5*
1,000	100	70	60	180	160	120
453.6	*30.5*	*21.4*	*18.3*	*54.9*	*48.8*	*36.6*
1,500	114	80	69	206	183	137
680.4	*34.9*	*24.5*	*20.9*	*62.8*	*55.9*	*41.9*
2,000	126	88	76	227	202	151
907.2	*38.4*	*26.9*	*23.0*	*69.1*	*61.5*	*46.1*
3,000	144	101	87	260	231	173
1,360.8	*44.0*	*30.8*	*26.4*	*79.1*	*70.4*	*52.7*
5,000	171	120	103	308	274	205
2,268.0	*52.2*	*36.5*	*31.3*	*93.8*	*83.4*	*62.5*
7,000	191	134	115	344	306	230
3,175.1	*58.4*	*40.9*	*35.0*	*104.9*	*93.3*	*70.0*
10,000	215	151	129	388	345	259
4,535.9	*65.7*	*46.0*	*39.4*	*118.2*	*105.1*	*78.8*
15,000	247	173	148	444	395	296
6,803.9	*75.2*	*52.7*	*45.1*	*135.3*	*120.3*	*90.2*
20,000	271	190	163	489	434	326
9,071.8	*82.8*	*58.0*	*49.6*	*148.9*	*132.4*	*99.3*
30,000	311	218	186	559	497	373
13,607.7	*94.8*	*66.4*	*56.8*	*170.5*	*151.6*	*113.6*
50,000	368	258	221	663	589	442
22,679.5	*112.4*	*78.7*	*67.4*	*202.1*	*179.7*	*134.7*

Table V3.E3.T5. HD 1.1 ILD from ECM, Continued

NEWQD	Barricaded Distance			Unbarricaded Distance		
	Front	Side[b]	Rear	Front	Side[e]	Rear
(lbs)	(ft)	(ft)	(ft)	(ft)	(ft)	(ft)
[kg]	*[m]*	*[m]*	*[m]*	*[m]*	*[m]*	*[m]*
70,000	412	288	247	742	659	495
31,751.3	*125.7*	*88.0*	*75.4*	*226.1*	*201.1*	*150.7*
100,000	464	325	278	835	743	557
45,359.0	*141.6*	*99.1*	*84.9*	*254.6*	*226.5*	*169.8*
150,000	531	372	319	956	850	653
68,038.5	*162.1*	*113.5*	*97.2*	*291.5*	*259.2*	*199.1*
200,000	585	409	351	1,053	936	746
90,718.0	*178.4*	*124.9*	*106.9*	*320.8*	*285.3*	*227.4*
300,000	669	469	402	1,205	1,071	937
136,077.0	*204.2*	*143.0*	*122.4*	*367.2*	*326.6*	*285.7*
500,000	715	714	714	1,429	1,429	1,429
226,795.0	*218.0*	*217.7*	*217.7*	*435.4*	*435.4*	*435.4*

a	English EQNs (NEWQD in lbs, D in ft)		
	NEWQD $\leq$ 300,000 lbs:	$D = 10*NEWQD^{1/3}$	EQN V3.E3.T5-1
	300,000 lbs < NEWQD $\leq$ 500,000 lbs:	$D = (13.659 - 1.6479 \times 10^{-5}*NEWQD + 1.4358 \times 10^{-1}*NEWQD^2)*NEWQD^{1/3}$	EQN V3.E3.T5-2
	D $\leq$ 669 ft:	$NEWQD = D^3/1000$	EQN V3.E3.T5-3
	669 ft < D $\leq$ 715 ft:	$NEWQD = 1.50138 \times 10^8 - 6.73914 \times 10^5*D + 1002.9*D^2 - 0.4938*D^3$	EQN V3.E3.T5-4
	Metric EQNs (NEWQD in kg, D in m)		
	NEWQD $\leq$ 136,077 kg:	$D = 3.97*NEWQD^{1/3}$	*EQN V3.E3.T5-5*
	136,077 kg < NEWQD $\leq$ 226,795 kg:	$D = (5.419 - 1.4410 \times 10^{-5}*NEWQD + 2.7684 \times 10^{-11}*NEWQD^2)*NEWQD^{1/3}$	*EQN V3.E3.T5-6*
	D $\leq$ 204.2 m:	$NEWQD = D^3/62.429$	*EQN V3.E3.T5-7*
	204.2 < D $\leq$ 218.0 m:	$NEWQD = 6.80924 \times 10^7 - 1.002764 \times 10^6*D + 4895.93*D^2 - 7.90884*D^3$	*EQN V3.E3.T5-8*
b	English EQNs (NEWQD in lbs, D in ft)		
	NEWQD $\leq$ 300,000 lbs:	$D = 7*NEWQD^{1/3}$	EQN V3.E3.T5-9
	300,000 lbs < NEWQD $\leq$ 400,000 lbs:	$D = (1.0848 + 1.986 \times 10^{-5}*NEWQD)*NEWQD^{1/3}$	EQN V3.E3.T5-10
	NEWQD > 400,000 lbs:	$D = 9*NEWQD^{1/3}$	EQN V3.E3.T5-11
	D $\leq$ 469 ft:	$NEWQD = D^3/343$	EQN V3.E3.T5-12
	469 ft < D $\leq$ 663 ft:	$NEWQD = 57{,}424 + 515.89*D$	EQN V3.E3.T5-13
	D > 663 ft:	$NEWQD = D^3/729$	EQN V3.E3.T5-14
	Metric EQNs (NEWQD in kg, D in m)		
	NEWQD $\leq$ 136,077 kg:	$D = 2.78*NEWQD^{1/3}$	*EQN V3.E3.T5-15*
	136,077 kg < NEWQD $\leq$ 181,434 kg:	$D = (0.4303 + 1.7369 \times 10^{-5}*NEWQD)*NEWQD^{1/3}$	*EQN V3.E3.T5-16*
	NEWQD > 181,436 kg:	$D = 3.57*NEWQD^{1/3}$	*EQN V3.E3.T5-17*
	D $\leq$ 143.7 m:	$NEWQD = D^3/21.413$	*EQN V3.E3.T5-18*
	143.7 m < D $\leq$ 202.8 m:	$NEWQD = 26{,}048 + 767.73*D$	*EQN V3.E3.T5-19*
	D > 202.8 m:	$NEWQD = D^3/45.511$	*EQN V3.E3.T5-20*

Table V3.E3.T5. HD 1.1 ILD from ECM, Continued

c	English EQNs (NEWQD in lbs, D in ft)		
	NEWQD $\leq$ 300,000 lbs:	$D = 6*NEWQD^{1/3}$	EQN V3.E3.T5-21
	300,000 lbs < NEWQD $\leq$ 400,000 lbs:	$D = (-3.059 + 3.0228 \times 10^{-5}*NEWQD) * NEWQD^{1/3}$	EQN V3.E3.T5-22
	NEWQD > 400,000 lbs:	$D = 9*NEWQD^{1/3}$	EQN V3.E3.T5-23
	D $\leq$ 402 ft:	$NEWQD = D^3/216$	EQN V3.E3.T5-24
	402 ft < D $\leq$ 665 ft:	NEWQD = 148,160 + 379.7*D	EQN V3.E3.T5-25
	D > 665 ft:	$NEWQD = D^3/729$	EQN V3.E3.T5-26
	Metric EQNs (NEWQD in kg, D in m)		
	NEWQD $\leq$ 136,077 kg:	$D = 2.38*NEWQD^{1/3}$	*EQN V3.E3.T5-27*
	136,077 kg < NEWQD $\leq$ 181,436 kg:	$D = (-1.2135 + 2.6437 \times 10^{-5}*NEWQD) *NEWQD^{1/3}$	*EQN V3.E3.T5-28*
	NEWQD > 181,436 kg:	$D = 3.57*NEWQD^{1/3}$	*EQN V3.E3.T5-29*
	D $\leq$ 122.6 m:	$NEWQD = D^3/13.485$	*EQN V3.E3.T5-30*
	122.6 m < D $\leq$ 202.8 m:	*NEWQD = 67,206 + 565.05*D*	*EQN V3.E3.T5-31*
	D > 202.8 m:	$NEWQD = D^3/45.511$	*EQN V3.E3.T5-32*
d	English EQNs (NEWQD in lbs, D in ft)		
	NEWQD $\leq$ 500,000 lbs:	$D = 18*NEWQD^{1/3}$	EQN V3.E3.T5-33
	D $\leq$ 1,429 ft:	$NEWQD = D^3/5{,}832$	EQN V3.E3.T5-34
	Metric EQNs (NEWQD in kg, D in m)		
	NEWQD $\leq$ 226,795 kg:	$D = 7.14*NEWQD^{1/3}$	*EQN V3.E3.T5-35*
	D > 435.4 m:	$NEWQD = D^3/364.086$	*EQN V3.E3.T5-36*
e	English EQNs (NEWQD in lbs, D in ft)		
	NEWQD $\leq$ 300,000 lbs:	$D = 16*NEWQD^{1/3}$	EQN V3.E3.T5-37
	300,000 lbs < NEWQD $\leq$ 400,000 lbs:	$D = (9.9683 + 2.0135 \times 10^{-5}*NEWQD) *NEWQD^{1/3}$	EQN V3.E3.T5-38
	NEWQD > 400,000 lbs:	$D = 18*NEWQD^{1/3}$	EQN V3.E3.T5-39
	D $\leq$ 1071 ft:	$NEWQD = D^3/4{,}096$	EQN V3.E3.T5-40
	1,071 ft < D $\leq$ 1,328 ft:	NEWQD = -118,180 + 390.35*D	EQN V3.E3.T5-41
	D > 1,328 ft:	$NEWQD = D^3/5{,}832$	EQN V3.E3.T5-42
	Metric EQNs (NEWQD in kg, D in m)		
	NEWQD $\leq$ 136,077 kg:	$D = 6.35*NEWQD^{1/3}$	*EQN V3.E3.T5-43*
	136,077 kg < NEWQD $\leq$ 181,436 kg:	$D = (3.9544 + 1.76097 \times 10^{-5}*NEWQD) *NEWQD^{1/3}$	*EQN V3.E3.T5-44*
	NEWQD > 181,436 kg:	$D = 7.14*NEWQD^{1/3}$	*EQN V3.E3.T5-45*
	D $\leq$ 326.6 m:	$NEWQD = D^3/255.709$	*EQN V3.E3.T5-46*
	122.6 m < D $\leq$ 202.8 m:	*NEWQD = -53,605 + 580.89*D*	*EQN V3.E3.T5-47*
	D > 404.7 m:	$NEWQD = D^3/364.086$	*EQN V3.E3.T5-48*

Table V3.E3.T5. HD 1.1 ILD from ECM, Continued

f	English EQNs (NEWQD in lbs, D in ft)		
	NEWQD $\leq$ 100,000 lbs:	$D = 12*NEWQD^{1/3}$	EQN V3.E3.T5-49
	100,000 lbs < NEWQD $\leq$ 300,000 lbs:	$D = (11.521 + 1.9918 \times 10^{-6}*NEWQD + 2.0947 \times 10^{-11}*NEWQD^{2})*NEWQD^{1/3}$	EQN V3.E3.T5-50
	300,000 lbs < NEWQD $\leq$ 400,000 lbs:	$D = (1.9389 + 4.0227 \times 10^{-5}*NEWQD) * NEWQD^{1/3}$	EQN V3.E3.T5-51
	NEWQD > 400,000 lbs:	$D = 18*NEWQD^{1/3}$	EQN V3.E3.T5-52
	D $\leq$ 557 ft:	$NEWQD = D^{3}/1{,}728$	EQN V3.E3.T5-53
	557 ft < D $\leq$ 938 ft:	NEWQD = -193,080 + 526.83*D	EQN V3.E3.T5-54
	938 ft < D $\leq$ 1,328 ft:	NEWQD = 60,778 + 255.83*D	EQN V3.E3.T5-55
	D > 1,328 ft:	$NEWQD = D^{3}/5{,}832$	EQN V3.E3.T5-56
	Metric EQNs (NEWQD in kg, D in m)		
	NEWQD $\leq$ 45,359 kg:	$D = 4.76*NEWQD^{1/3}$	*EQN V3.E3.T5-57*
	45,359 kg < NEWQD $\leq$ 136,077 kg:	$D = (4.5704 + 1.7420 \times 10^{-6}*NEWQD + 4.0389 \times 10^{-11}*NEWQD^{2})*NEWQD^{1/3}$	*EQN V3.E3.T5-58*
	136,077 kg < NEWQD $\leq$ 181,436 kg:	$D = (0.7692 + 3.5182 \times 10\text{-}5*NEWQD) *NEWQD^{1/3}$	*EQN V3.E3.T5-59*
	NEWQD > 181,436 kg:	$D = 7.14*NEWQD^{1/3}$	*EQN V3.E3.T5-60*
	D $\leq$ 169.8 m:	$NEWQD = D^{3}/107.877$	*EQN V3.E3.T5-61*
	169.8 m < D $\leq$ 285.7 m:	*NEWQD = -87,578 + 784.00*D*	*EQN V3.E3.T5-62*
	285.7 m < D $\leq$ 404.7 m:	*NEWQD = 27,568 + 380.7*D*	*EQN V3.E3.T5-63*
	D > 404.7 m:	$NEWQD = D^{3}/364.086$	*EQN V3.E3.T5-64*

Table V3.E3.T6. HD 1.1 IMD Hazard Factors

To ES		From PES									
		ECM[a]				AGM or Aboveground Operating Building[b]		Modules or Cells		HPM[c, d]	
		S	R	FB	FU	B	U	B	U	S	F[e]
		(ft/lb$^{1/3}$)	(ft/lb$^{1/3}$)	(ft/lb$^{1/3}$)	(ft/lb$^{1/3}$)	(ft/lb$^{1/3}$)	(ft/lb$^{1/3}$)	(ft/lb$^{1/3}$)	(ft/lb$^{1/3}$)	(ft/lb$^{1/3}$)	(ft/lb$^{1/3}$)
		[m/kg$^{1/3}$]	*[m/kg$^{1/3}$]*	*[m/kg$^{1/3}$]*	*[m/kg$^{1/3}$]*	*[m/kg$^{1/3}$]*	*[m/kg$^{1/3}$]*	*[m/kg$^{1/3}$]*	*[m/kg$^{1/3}$]*	*[m/kg$^{1/3}$]*	*[m/kg$^{1/3}$]*
ECM (7-Bar)	S	1.25	1.25	2.75	2.75	4.5	4.5	4.5	4.5	1.25	2.75
		0.50	*0.50*	*1.09*	*1.09*	*1.79*	*1.79*	*1.79*	*1.79*	*0.50*	*1.09*
	R	1.25	1.25	2	2	4.5	4.5	4.5	4.5	1.25	2
		0.50	*0.50*	*0.79*	*0.79*	*1.79*	*1.79*	*1.79*	*1.79*	*0.50*	*0.79*
	FU	2.75	2	6	6	6	6	6	6	2.75	6
		1.09	*0.79*	*2.38*	*2.38*	*2.38*	*2.38*	*2.38*	*2.38*	*1.09*	*2.38*
	FB[f]	2.75	2	4.5	6	4.5	6	4.5	6	2.75	6
		1.09	*0.79*	*1.79*	*2.38*	*1.79*	*2.38*	*1.79*	*2.38*	*1.09*	*2.38*
ECM (3-Bar)	S	1.25	1.25	2.75	2.75	6	6	6	6	1.25	2.75
		0.50	*0.50*	*1.09*	*1.09*	*2.38*	*2.38*	*2.38*	*2.38*	*0.50*	*1.09*
	R	1.25	1.25	2	2	6	6	6	6	1.25	2
		0.50	*0.50*	*0.79*	*0.79*	*2.38*	*2.38*	*2.38*	*2.38*	*0.50*	*0.79*
	FU	4.5	4.5	6	9	6	9	6	9	4.5	9
		1.79	*1.79*	*2.38*	*3.57*	*2.38*	*3.57*	*2.38*	*3.57*	*1.79*	*3.57*
	FB[f]	4.5	4.5	6	6	6	6	6	6	4.5	6
		1.79	*1.79*	*2.38*	*2.38*	*2.38*	*2.38*	*2.38*	*2.38*	*1.79*	*2.38*
ECM (Undefined)	S	1.25[g]	1.25[g]	4.5[g]	4.5[g]	6	6	6	6	1.25	4.5
		0.50[g]	*0.50[g]*	*1.79[g]*	*1.79[g]*	*2.38*	*2.38*	*2.38*	*2.38*	*0.50*	*1.79*
		2[h]	2[h]	6[h]	6[h]						
		0.79[h]	*0.79[h]*	*2.38[h]*	*2.38[h]*						
	R	1.25	1.25	2	2	6	6	6	6	1.25	2
		0.50	*0.50*	*0.79*	*0.79*	*2.38*	*2.38*	*2.38*	*2.38*	*0.50*	*0.79*
	FU	6	6	6	11	6	11	6	11	6	11
		2.38	*2.38*	*2.38*	*4.36*	*2.38*	*4.36*	*2.38*	*4.36*	*2.38*	*4.36*
	FB[f]	6	6	6	6	6	6	6	6	6	6
		2.38	*2.38*	*2.38*	*2.38*	*2.38*	*2.38*	*2.38*	*2.38*	*2.38*	*2.38*
AGM	U	6	6	6	11	6	11	6	11	6	11
		2.38	*2.38*	*2.38*	*4.36*	*2.38*	*4.36*	*2.38*	*4.36*	*2.38*	*4.36*
	B	6	6	6	6	6	6	6	6	6	6
		2.38	*2.38*	*2.38*	*2.38*	*2.38*	*2.38*	*2.38*	*2.38*	*2.38*	*2.38*
Modules or Cells	U	6	6	6	11	6	11	1.1[i]	11	6	11
		2.38	*2.38*	*2.38*	*4.36*	*2.38*	*4.36*	*0.44[i]*	*4.36*	*2.38*	*4.36*
	B	1.25	1.25	6	6	6	6	1.1[i]	1.1[i]	1.25	6
		0.50	*0.50*	*2.38*	*2.38*	*2.38*	*2.38*	*0.44[i]*	*0.44[i]*	*0.50*	*2.38*
HPM	S,F[d]	1.25	1.25	2.75	2.75	4.5	4.5	4.5	4.5	1.25	2.75
		0.50	*0.50*	*1.09*	*1.09*	*1.79*	*1.79*	*1.79*	*1.79*	*0.50*	*1.09*

Table V3.E3.T6. HD 1.1 IMD Hazard Factors, Continued

S = side; R = rear; F = front; B = barricaded; U = unbarricaded; FU = front unbarricaded; FB = front barricaded; AGM = aboveground magazine	
a	Descriptions of ECMs are in section **V2.E5.5.**; ECMs are categorized as 7-Bar, 3-Bar, or Undefined, which refers to the structural strength of the headwall and door(s).
b	AGMs are all types of above grade (non-earth-covered) magazines or storage pads. See paragraphs **V3.E3.1.1.1.1.8.** and **V3.E3.1.1.2.1.9.** for separation of service magazines from operating buildings.
c	A description of an HPM can be found at section **V2.E5.7.** Additional information is provided in paragraph **V3.E3.1.3.** The MCE in an HPM is limited to a maximum of 60,000 lbs [27,216 kg].
d	The storage areas in the HPM are barricaded on all sides and protected by a reinforced concrete cover. All directions are, therefore, considered to be side orientations when it is the ES. For siting purposes, an HPM has no rear sector. See Figure **V3.E3.F2.** in the appendix to this enclosure for an illustration of the front and side sectors of an HPM.
e	The unbarricaded front (entrance to loading area) is a factor when the HPM is the PES because the MCE includes AE in the loading area. The hazard factors have been determined accordingly.
f	Those barricades serve to mitigate both fragments and overpressure hazards. Section **V2.E5.4.** identifies requirements for their design, construction and location.
g	Use this K-factor for NEWQD in PESs up to 250,000 lbs [113,398 kg].
h	Use this K-factor for NEWQD in PESs greater than 250,000 lbs [113,398 kg].
i	Modules and cells are defined in section **V2.E5.6.**

Table V3.E3.T7. QD for HD 1.1 AE for K = 1.1, 1.25, 2, 2.75, 4.5, and 5

NEWQD	Hazard Factor, K					
	1.1	1.25	2	2.75	4.5	5
	0.44	*0.50*	*0.79*	*1.09*	*1.79*	*1.98*
(lbs)	(ft/lb$^{1/3}$)	(ft/lb$^{1/3}$)	(ft/lb$^{1/3}$)	(ft/lb$^{1/3}$)	(ft/lb$^{1/3}$)	(ft/lb$^{1/3}$)
[kg]	*[m/kg$^{1/3}$]*	*[m/kg$^{1/3}$]*	*[m/kg$^{1/3}$]*	*[m/kg$^{1/3}$]*	*[m/kg$^{1/3}$]*	*[m/kg$^{1/3}$]*
100	7.0	7.0	9.3	13	21	23
45.4	*2.1*	*2.1*	*2.8*	*3.9*	*6.4*	*7.1*
150	7.0	7.0	11	15	24	27
68.0	*2.1*	*2.1*	*3.2*	*4.4*	*7.3*	*8.1*
200	7.0	7.3	12	16	26	29
90.7	*2.1*	*2.2*	*3.5*	*4.9*	*8.0*	*8.9*
300	7.4	8.4	13	18	30	33
136.1	*2.3*	*2.6*	*4.1*	*5.6*	*9.2*	*10.2*
500	8.7	9.9	16	22	36	40
226.8	*2.7*	*3.0*	*4.8*	*6.6*	*10.9*	*12.1*
700	9.8	11	18	24	40	44
317.5	*3.0*	*3.4*	*5.4*	*7.4*	*12.2*	*13.5*
1,000	11	13	20	27	45	50
453.6	*3.4*	*3.8*	*6.1*	*8.4*	*13.8*	*15.2*
1,500	13	14	23	31	52	57
680.4	*3.9*	*4.4*	*6.9*	*9.6*	*15.7*	*17.4*
2,000	14	16	25	35	57	63
907.2	*4.3*	*4.8*	*7.6*	*10.6*	*17.3*	*19.2*
3,000	16	18	29	40	65	72
1,360.8	*4.9*	*5.5*	*8.8*	*12.1*	*19.8*	*21.9*
5,000	19	21	34	47	77	85
2,268.0	*5.8*	*6.6*	*10.4*	*14.3*	*23.5*	*26.0*

Table V3.E3.T7. QD for HD 1.1 AE for K-factor (K) = 1.1, 1.25, 2, 2.75, 4.5, and 5, Continued

NEWQD	Hazard Factor, K					
	1.1	1.25	2	2.75	4.5	5
	0.44	*0.50*	*0.79*	*1.09*	*1.79*	*1.98*
(lbs)	(ft/lb$^{1/3}$)	(ft/lb$^{1/3}$)	(ft/lb$^{1/3}$)	(ft/lb$^{1/3}$)	(ft/lb$^{1/3}$)	(ft/lb$^{1/3}$)
[kg]	*[m/kg$^{1/3}$]*	*[m/kg$^{1/3}$]*	*[m/kg$^{1/3}$]*	*[m/kg$^{1/3}$]*	*[m/kg$^{1/3}$]*	*[m/kg$^{1/3}$]*
7,000	21	24	38	53	86	96
3,175.1	*6.5*	*7.3*	*11.6*	*16.0*	*26.3*	*29.1*
10,000	24	27	43	59	97	108
4,535.9	*7.3*	*8.3*	*13.1*	*18.0*	*29.6*	*32.8*
15,000	27	31	49	68	111	123
6,803.9	*8.3*	*9.5*	*15.0*	*20.7*	*33.9*	*37.5*
20,000	30	34	54	75	122	136
9,071.8	*9.2*	*10.4*	*16.5*	*22.7*	*37.3*	*41.3*
30,000	34	39	62	85	140	155
13,607.7	*10.5*	*11.9*	*18.9*	*26.0*	*42.7*	*47.3*
50,000	41	46	74	101	166	184
22,679.5	*12.5*	*14.2*	*22.4*	*30.9*	*50.7*	*56.0*
70,000	45	52	82	113	185	206
31,751.3	*13.9*	*15.8*	*25.0*	*34.5*	*56.7*	*62.7*
100,000	51	58	93	128	209	232
45,359.0	*15.7*	*17.8*	*28.2*	*38.9*	*63.8*	*70.6*
150,000	58	66	106	146	239	266
68,038.5	*18.0*	*20.4*	*32.3*	*44.5*	*73.1*	*80.8*
200,000	64	73	117	161	263	292
90,718.0	*19.8*	*22.5*	*35.5*	*49.0*	*80.4*	*89.0*
300,000	74	84	134	184	301	335
136,077.0	*22.6*	*25.7*	*40.6*	*56.1*	*92.1*	*101.8*
500,000	87	99	159	218	357	397
226,795.0	*26.8*	*30.5*	*48.2*	*66.5*	*109.2*	*120.7*
700,000	98	111	178	244	400	444
317,513.0	*30.0*	*34.1*	*53.9*	*74.4*	*122.1*	*135.1*
1,000,000	110	125	200	275	450	500
453,590.0	*33.8*	*38.4*	*60.7*	*83.7*	*137.5*	*152.1*

Table V3.E3.T8. QD for HD 1.1 AE for K = 6, 8, 9, 11, 18, and 40

NEWQD	Hazard Factor, K					
	6	8	9	11	18	40
	2.38	*3.17*	*3.57*	*4.36*	*7.14*	*15.87*
(lbs)	(ft/lb$^{1/3}$)	(ft/lb$^{1/3}$)	(ft/lb$^{1/3}$)	(ft/lb$^{1/3}$)	(ft/lb$^{1/3}$)	(ft/lb$^{1/3}$)
[kg]	*[m/kg$^{1/3}$]*	*[m/kg$^{1/3}$]*	*[m/kg$^{1/3}$]*	*[m/kg$^{1/3}$]*	*[m/kg$^{1/3}$]*	*[m/kg$^{1/3}$]*
100	28	37	42	51	84	186
45.4	*8.5*	*11.3*	*12.7*	*15.5*	*25.5*	*56.6*
150	32	43	48	58	96	213
68.0	*9.7*	*12.9*	*14.6*	*17.8*	*29.1*	*64.8*
200	35	47	53	64	105	234
90.7	*10.7*	*14.2*	*16.0*	*19.6*	*32.1*	*71.3*
300	40	54	60	74	120	268
136.1	*12.2*	*16.3*	*18.4*	*22.4*	*36.7*	*81.6*
500	48	63	71	87	143	317
226.8	*14.5*	*19.3*	*21.8*	*26.6*	*43.5*	*96.8*
700	53	71	80	98	160	355
317.5	*16.2*	*21.6*	*24.4*	*29.7*	*48.7*	*108.3*
1,000	60	80	90	110	180	400
453.6	*18.3*	*24.4*	*27.4*	*33.5*	*54.9*	*121.9*
1,500	69	92	103	126	206	458
680.4	*20.9*	*27.9*	*31.4*	*38.3*	*62.8*	*139.6*
2,000	76	101	113	139	227	504
907.2	*23.0*	*30.7*	*34.6*	*42.2*	*69.1*	*153.6*
3,000	87	115	130	159	260	577
1,360.8	*26.4*	*35.1*	*39.6*	*48.3*	*79.1*	*175.9*
5,000	103	137	154	188	308	684
2,268.0	*31.3*	*41.6*	*46.9*	*57.3*	*93.8*	*208.5*
7,000	115	153	172	210	344	765
3,175.1	*35.0*	*46.6*	*52.5*	*64.1*	*104.9*	*233.3*
10,000	129	172	194	237	388	862
4,535.9	*39.4*	*52.5*	*59.1*	*72.2*	*118.2*	*262.7*
15,000	148	197	222	271	444	986
6,803.9	*45.1*	*60.1*	*67.6*	*82.6*	*135.3*	*300.7*
20,000	163	217	244	299	489	1,086
9,071.8	*49.6*	*66.1*	*74.5*	*90.9*	*148.9*	*331.0*
30,000	186	249	280	342	559	1,243
13,607.7	*56.8*	*75.7*	*85.2*	*104.1*	*170.5*	*378.9*
50,000	221	295	332	405	663	1,474
22,679.5	*67.4*	*89.7*	*101.1*	*123.4*	*202.1*	*449.2*
70,000	247	330	371	453	742	1,649
31,751.3	*75.4*	*100.4*	*113.0*	*138.1*	*226.1*	*502.5*
100,000	278	371	418	511	835	1,857
45,359.0	*84.9*	*113.1*	*127.3*	*155.5*	*254.6*	*566.0*

Table V3.E3.T8. QD for HD 1.1 AE for K = 6, 8, 9, 11, 18, and 40, Continued

NEWQD	Hazard Factor, K					
	6	8	9	11	18	40
	2.38	*3.17*	*3.57*	*4.36*	*7.14*	*15.87*
(lbs)	(ft/lb$^{1/3}$)	(ft/lb$^{1/3}$)	(ft/lb$^{1/3}$)	(ft/lb$^{1/3}$)	(ft/lb$^{1/3}$)	(ft/lb$^{1/3}$)
[kg]	*[m/kg$^{1/3}$]*	*[m/kg$^{1/3}$]*	*[m/kg$^{1/3}$]*	*[m/kg$^{1/3}$]*	*[m/kg$^{1/3}$]*	*[m/kg$^{1/3}$]*
150,000	319	425	478	584	956	2,125
68,038.5	*97.2*	*129.4*	*145.7*	*178.0*	*291.5*	*647.9*
200,000	351	468	526	643	1,053	2,339
90,718.0	*106.9*	*142.4*	*160.4*	*195.9*	*320.8*	*713.1*
300,000	402	536	602	736	1,205	2,678
136,077.0	*122.4*	*163.1*	*183.6*	*224.3*	*367.2*	*816.3*
500,000	476	635	714	873	1,429	3,175
226,795.0	*145.1*	*193.3*	*217.7*	*265.9*	*435.4*	*967.8*
700,000	533	710	799	977	1,598	3,552
317,513.0	*162.4*	*216.3*	*243.6*	*297.4*	*487.1*	*1,082.7*
1,000,000	600	800	900	1,100	1,800	4,000
453,590.0	*182.9*	*243.6*	*274.3*	*335.0*	*548.6*	*1,219.4*

V3.E3.1.5.4. Application of Barricaded ILD and Barricaded IMD From an ECM. Figure **V3.E3.F8.** in the appendix to this enclosure illustrates the IMD relationships that can exist between an ECM and AGM, and the ILD relationships that can exist between an ECM and facilities permitted to be at ILD or barricaded ILD from an ECM, when each contain HD 1.1 AE. Permissible exposures at ILD are listed in paragraphs **V3.E3.1.1.1.** (barricaded ILD) and **V3.E3.1.1.2.** (unbarricaded ILD). Siting criteria for AGM are provided in Table **V3.E3.T6.** These criteria apply to the use of barricaded IMD for AGM and for use of barricaded ILD:

V3.E3.1.5.4.1. Front Sector of an ECM. Use of barricaded ILD or barricaded IMD, as applicable, between an ECM and a facility located within the ECM's front sector requires that a properly constructed, intervening barricade be located between the ES and the PES. This barricade must meet the construction and location criteria of section **V2.E5.4.** If it does not meet these criteria, then unbarricaded IMD or unbarricaded ILD, as applicable, will be used for siting purposes.

V3.E3.1.5.4.2. Side and Rear Sectors of an ECM. If an ECM's earth cover meets all construction criteria of section **V2.E5.4.** it will qualify as a barricade, and use of barricaded ILD or barricaded IMD, as applicable, from the sides or rear of the ECM is permissible. Failure of the ECM's earth cover to meet these criteria requires use of unbarricaded IMD or unbarricaded ILD, as applicable, for siting purposes.

V3.E3.1.5.5. Application of Barricaded ILD and Barricaded IMD From an HPM. Permissible exposures at ILD are listed in paragraphs **V3.E3.1.1.1.** (barricaded ILD) and **V3.E3.1.1.2.** (unbarricaded ILD). Siting criteria for HPM containing HD 1.1 are provided in Table **V3.E3.T6.** The following applies to an HPM:

V3.E3.1.5.5.1. Front Sector of an HPM. Use of barricaded ILD or barricaded IMD, as applicable, between an HPM and a facility located within the HPM's front sector requires that a properly constructed, intervening barricade be located between the ES and the PES. This barricade must meet the construction and location criteria of section **V2.E5.4.** If it does not meet these criteria, then unbarricaded IMD or ILD, as applicable, will be used for siting purposes.

V3.E3.1.5.5.2. Side Sector of an HPM. If the earth berm surrounding an HPM meets all construction criteria shown on the DDESB-approved construction drawing, it will qualify as a barricade and use of barricaded ILD or barricaded IMD, as applicable, from the HPM's sides is permissible. Failure to meet these criteria requires use of unbarricaded IMD or unbarricaded ILD, as applicable, for siting purposes.

V3.E3.1.5.6. HD 1.2, HD 1.3 and HD 1.4 AE Storage in Existing ECMs. These IMD standards apply only to storage of HD 1.1 AE. Existing ECM, regardless of orientation, that meet the construction and barricading requirements of **Volume 2 – Enclosure 5** and are sited one from another for a minimum of 100 lbs [45.4 kg] NEWQD of HD 1.1 may be used to their physical storage capacity for HD 1.2, HD 1.3, and HD 1.4 AE, provided distances to other exposures comply with applicable QD requirements.

V3.E3.2. HD 1.2

V3.E3.2.1. HD 1.2 are items configured for storage and transportation that do not mass detonate when a single item or package in a stack is initiated. Explosions involving the items result in their burning and exploding progressively with no more than a few at a time reacting. These reactions will project fragments, firebrands, and unexploded items from the explosion site. Blast effects are limited to the immediate vicinity and are not the primary hazard.

V3.E3.2.1.1. **(Added)(AF)** Table **V3.E3.T18.** provides a summary matrix of all the paired relationships for HD 1.2.1 and 1.2.2.

V3.E3.2.1.2. **(Added)(AF)** HD 1.2 items' functioning effects vary with the size and weight of the item. These items are separated into three subdivisions (1.2.1, 1.2.2, 1.2.3) to account for the differences in magnitude of these effects and to set QD criteria.

V3.E3.2.2. Small quantities of HD 1.2.1 ($\leq$ 450 lbs [204 kg] NEWQD), in certain packaging configurations, will react in a manner more typical of an HD 1.1 event. When located in structures that stop primary fragments but which generate a secondary debris hazard (e.g., certain ECMs and hardened structures), the structural damage and debris hazards produced from these events are more characteristic of an HD 1.1 explosion, rather than the progressive nature of an HD 1.2.1 event. When the NEWQD and the MCE of the packaged HD 1.2.1 items fall within the ranges specified in the equation NEWQD $\leq$ MCE $\leq$ 450 lbs [204 kg], the HD 1.2.1 will be treated as HD 1.1 and the criteria in paragraph **V3.E3.1.2.1.1.1.** will be used. If they fall outside the ranges of the equation, then the criteria in Table **V3.E3.T9.** will apply.

V3.E3.2.3. The NEW of an HD 1.2 item (used for transportation) is the sum of the weight of the HD 1.1 and 1.3 material contained within the item. The NEWQD for an item is equal to

NEW (NEWQD = NEW) unless testing has been conducted. Based on testing, the NEWQD may include a reduced contribution (≤ 100 percent) from the HD 1.3 material as a result of the functioning of the HD 1.1 material. The NEWQD should be determined by the Single Package Test (UN) Test 6 (a) or its equivalent), not the Bonfire Test (UN Test 6 (c)). The NEWQD for a specific item may be obtained from the JHCS. The effects produced by the functioning of HD 1.2 items vary with the size and weight of the item. HD 1.2 AE is separated into two subdivisions in order to account for the differences in magnitude of these effects for purposes of setting QD criteria. The more hazardous items are referred to as HD 1.2.1 items. The less hazardous items are referred to as HD 1.2.2. The definitions of these two HD 1.2 subdivisions are provided in paragraphs **V3.E3.2.3.1.** and **V3.E3.2.3.2.** It is important not to exaggerate the significance of the value of 1.60 lbs [0.73 kg] used to differentiate between HD 1.2.1 and HD 1.2.2. It is based on a break point in the database supporting the QD relationships and tables and the NEWQD of the rounds tested. If comprehensive data are available for a particular item, then the item may be placed in that category of HD 1.2 supported by the data and allocated the relevant QDs.

V3.E3.2.3.1. HD 1.2.1: NEWQD > 1.60 lbs [0.73 kg].

V3.E3.2.3.2. HD 1.2.2: NEWQD ≤ 1.60 lbs [0.73 kg].

V3.E3.2.4. The MCE for HD 1.2.1 is the NEWQD of an item times the number of items in three unpalletized, outer shipping packages, unless a different MCE is demonstrated by testing or analogy. The authorized MCE for a specific HD 1.2.1 item is listed in the JHCS.

V3.E3.2.5. The QD specified for HD 1.2 AE achieves the desired degree of protection against immediate hazards from an incident. Events involving HD 1.2 items lob large amounts of unexploded rounds, components, and subassemblies, which will remain hazardous after impact. Such items are likely to be more hazardous than in their original state because of possible damage to fuze safety devices or other features by heat and impact. Many types of AE containing sub-munitions, such as cluster bombs, can be expected to be projected out to distances as great as the relevant IBDs. Furthermore, it is impractical to specify QDs, which allow for the maximum possible flight ranges of propulsive items.

V3.E3.2.6. Table **V3.E3.T9.** provides a summary matrix of all the appropriate IBD, PTRD, and ILD separations for HD 1.2.1 and HD 1.2.2 AE for the various combinations of ESs and PESs. When HD 1.2.1 items are stored in structures that may contribute to the debris hazard, the IBD is determined by using the larger of these two distances: either that given in Table **V3.E3.T10.** for the appropriate explosive weight (number of items times NEWQD per item) or that given in Table **V3.E3.T11.** for the appropriate MCE. The HDD specified in Table **V3.E3.T11.** equates to IBD.

V3.E3.2.6.1. **(Added)(AF)** HD 1.2.2 IBD is given in Table **V3.E3.T12.**

V3.E3.2.7. IMD depend on the types of structures acting as both the PES and the ES.

V3.E3.2.8. PTRD provided in Tables **V3.E3.T9.** through **V3.E3.T12.** consider the transient nature of the exposure in the same manner as for HD 1.1. PTRD is computed as 60 percent of the IBD for items in this HD, with minimum distances specified in Table **V3.E3.T9.**

Table V3.E3.T9. Summary of HD 1.2.1, 1.2.2, and 1.2.3 QD[a, b, c]

To ES		From PES				
		ECM		AGS		
		S or R	F	(H)	(H/R)	(L)
ECM (7 Bar/ 3 Bar) (IMD)	S	0[d]	0[d]	0[d]	0[d]	0[d]
	R	0[d]	0[d]	0[d]	0[d]	0[d]
	FU	0[d]	0[d]	0[d]	0[d]	0[d]
	FB	0[d]	0[d]	0[d]	0[d]	0[d]
ECM (Undefined) (IMD)	S	0[d]	0[d]	0[d]	0[d]	0[d]
	R	0[d]	0[d]	0[d]	0[d]	0[d]
	FU	0[d]	200/300/100 ft *61.0/91.4/30.5 m*	200/300/100 ft *61.0/91.4/30.5 m*	200/300/100 ft *61.0/91.4/30.5 m*	200/300/100 ft *61.0/91.4/30.5 m*
	FB	0[d]	0[d]	0[d]	0[d]	0[d]
AGS (H/R) (IMD)	U or B	0[d]	0[d]	0[d]	0[d]	0[d]
AGS (H or L) (IMD)	U or B	0[d]	200/300/100 ft *61.0/91.4/30.5 m*	200/300/100 ft *61.0/91.4/30.5 m*	200/300/100 ft *61.0/91.4/30.5 m*	200/300/100 ft *61.0/91.4/30.5 m*
ILD[e]		0[d]	Footnote f	Footnote f	Footnote f	Footnote f
PTRD[e]		200/300/100 ft *61.0/91.4/30.5 m*	Footnote g	Footnote g	Footnote g	Footnote g
IBD[e]		200/300/100 ft *61.0/91.4/30.5 m*	Footnote h	Footnote h	Footnote h	Footnote h

AGS (L) = aboveground structure or site, light

a	For PES-ES combinations where three distances are given: the first refers to a PES containing HD 1.2.1 AE with an MCE < 100 lbs [45.4 kg]; the second to a PES containing HD 1.2.1 AE with an MCE ≥ 100 lbs [45.4 kg]; and the third refers to a PES containing HD 1.2.2 AE. Where three IMD are given, the IMD from a PES containing only HD 1.2.3 AE to an ES containing other than HD 1.2.3 is K11 [K_m4.36] based on the largest MCE of the HD 1.2.3 AE in the PES.
b	For an ES containing only HD 1.2.3 items, the IMD from any PES to such an ES is 0 (Footnote d).
c	When the NEWQD and the MCE of the packaged HD 1.2.1 items fall within the ranges specified in the equation NEWQD ≤ MCE ≤ 450 lbs [204 kg], the HD 1.2.1 will be treated as HD 1.1 and the criteria of paragraph **V3.E3.1.2.1.1.1.**, as applicable, will be used (see paragraph **V3.E3.2.2.**).
d	Practical considerations such as firefighting and security will dictate specific separation distances as specified by the DoD Component.
e	See paragraph **V3.E3.2.13.** for HD 1.2.3.
f	ILD = 36 percent of IBD with a minimum distance equal to the IMD given in this table for the applicable PES-ES combination.
g	PTRD = 60 percent of IBD with a minimum distance equal to the IMD given in this table for AGS (L).
h	For HD 1.2.1 items in any structure, truck, trailer, or railcar, use the larger of the two applicable values given in Tables **V3.E3.T10.** and **V3.E3.T11.**; for HD 1.2.1 items in the open, use Table **V3.E3.T10.**; for HD 1.2.2 items, use Table **V3.E3.T12.**

V3.E3.2.9. ILD given in Tables **V3.E3.T9.** through **V3.E3.T12.** take into account the progressive nature of explosions involving these items (normally resulting from fire spread), up

to the magnitude of the MCE, and the ability to evacuate personnel from endangered areas before the progression involves large numbers of items. Exposed structures may be extensively damaged by projections and delayed propagation of explosions may occur due to the ignition of combustibles by projections. ILD is computed as 36 percent of the IBD for items of this HD, with a minimum distance equal to the IMD given in Table **V3.E3.T9.** for the applicable PES-ES combination.

V3.E3.2.10. When storing mixed subdivisions of HD 1.2 AE (HD 1.2.1 and HD 1.2.2), consider each subdivision separately and apply the greater of the two distances. The general mixing rules for HD 1.2 AE are given in Table **V3.E3.T13.**

V3.E3.2.11. For reasons of operational necessity, and in accordance with DoD Component-defined procedures, limited quantities of HD 1.2.2 items may be stored in facilities such as hangars, arms rooms, security alert force rooms, and manufacturing or operating buildings without the need for siting as a PES. Operations involving limited quantities of HD 1.2.2 items also are permitted without the need for siting as a PES, in accordance with DoD Component-defined procedures and for reasons of operational necessity. The DoD Component procedures should address items such as NEWQD limits, documentation requirements, approval process, and LPS requirements.

V3.E3.2.12. HD 1.2.3 is a special storage subdivision for HD 1.2 AE, as described in paragraph **V1.E6.2.1.2.3.**

V3.E3.2.12.1. **(Added)(AF)** HD 1.2.3. These items do not exhibit any sympathetic detonation response in the stack test, or any reaction more severe than burning in the external fire test, bullet impact test, or slow cook-off test.

V3.E3.2.12.2. **(Added)(AF)** When siting HD 1.2.3, cap the MCE at < 450 pounds, and cap the parenthetical fragment distance (xx) at 1,300 feet. These caps are for simplicity in siting and may be exceeded with AFSEC/SEW approval.

V3.E3.2.12.3. **(Added)(AF)** Table **V3.E3.T18.** provides a summary matrix of all the paired relationships for HD 1.2.3.

V3.E3.2.13. The IBD for HD 1.2.3 is determined using HD 1.3 QD for the NEWQD of the HD 1.2.3 item multiplied by the number of items present, but with a minimum IBD determined as follows:

V3.E3.2.13.1. If the AE are in a structure that can interrupt primary fragments and can contribute debris, the minimum IBD is the HDD given in Table **V3.E3.T11.** for the MCE of the HD 1.2.3 AE in the structure.

V3.E3.2.13.1.1. **(Added)(AF)** A heavy structure is defined as a structure with wall thickness >12 inches of reinforced concrete and a roof thickness >5.9 inches of reinforced concrete.

V3.E3.2.13.2. If the AE are in the open or in a light structure that will not interrupt primary fragments, the minimum IBD is the HFD based on the HD 1.1 hazardous fragment areal number density criteria applied to the MCE of the HD 1.2.3 AE. The HFD applicable to AE in the open is specified in hundreds of ft in parentheses as "(xx) HD 1.2.3."

V3.E3.2.13.3. As an alternative to the preceding HD 1.2.3 QD criteria, when an increase in the allowable quantity or a reduction in the required distance will result, HD 1.2.3 AE may be treated as detailed in paragraphs **V3.E3.2.13.3.1.** and **V3.E3.2.13.3.2.**:

V3.E3.2.13.3.1. If the HD 1.2.3 AE MCE is > 1.6 lbs [0.73 kg], consider the items as HD 1.2.1. Use the total NEWQD present, with the MCE of the HD 1.2.3 AE to determine the maximum QD.

Table V3.E3.T10. HD 1.2.1 QD (IBD, PTRD, ILD) for AE with NEWQD > 1.60 lbs [0.73 kg][a, b]

Explosive Weight[c]	IBD[d, e, f]	PTRD[g]	ILD[h]
(lbs)	(ft)	(ft)	(ft)
[kg]	*[m]*	*[m]*	*[m]*
2	200	200	200
0.9	*61.0*	*61.0*	*61.0*
3	200	200	200
1.4	*61.0*	*61.0*	*61.0*
4	200	200	200
1.8	*61.0*	*61.0*	*61.0*
5	200	200	200
2.3	*61.0*	*61.0*	*61.0*
7	200	200	200
3.2	*61.0*	*61.0*	*61.0*
10	200	200	200
4.5	*61.0*	*61.0*	*61.0*
15	200	200	200
6.8	*61.0*	*61.0*	*61.0*
20	200	200	200
9.1	*61.0*	*61.0*	*61.0*
30	200	200	200
13.6	*61.0*	*61.0*	*61.0*
50	200	200	200
22.7	*61.0*	*61.0*	*61.0*
70	200	200	200
31.8	*61.0*	*61.0*	*61.0*
100	268	200	200
45.4	*81.7*	*61.0*	*61.0*
150	348	209	200
68.0	*106.0*	*63.6*	*61.0*
200	403	242	200
90.7	*123.0*	*73.8*	*61.0*
300	481	288	200
136.1	*146.5*	*87.9*	*61.0*
500	576	346	207
226.8	*175.5*	*105.3*	*63.2*
700	638	383	230
317.5	*194.3*	*116.6*	*70.0*
1,000	702	421	253
453.6	*213.9*	*128.3*	*77.0*
1,500	774	464	278
680.4	*235.8*	*141.5*	*84.9*

Table V3.E3.T10. HD 1.2.1 QD (IBD, PTRD, ILD) for AE with NEWQD > 1.60 lbs [0.73 kg],[a, b] Continued

Explosive Weight[c]	IBD[d, e, f]	PTRD[g]	ILD[h]
(lbs)	(ft)	(ft)	(ft)
[kg]	*[m]*	*[m]*	*[m]*
2,000	824	494	296
907.2	*251.0*	*150.6*	*90.4*
3,000	893	536	321
1,361	*272.1*	*163.3*	*98.0*
5,000	978	587	352
2,268	*298.1*	*178.9*	*107.3*
7,000	1,033	620	372
3,175	*314.8*	*188.9*	*113.3*
10,000	1,090	654	392
4,536	*332.3*	*199.4*	*119.6*
15,000	1,154	692	415
6,804	*351.7*	*211.0*	*126.6*
20,000	1,198	719	431
9,072	*365.2*	*219.1*	*131.5*
30,000	1,260	756	453
13,608	*383.9*	*230.3*	*138.2*
50,000	1,335	801	481
22,680	*406.8*	*244.1*	*146.4*
70,000	1,383	830	498
31,751	*421.5*	*252.9*	*151.7*
100,000	1,433	860	516
45,359	*436.8*	*262.1*	*157.3*
150,000	1,489	893	536
68,039	*453.8*	*272.3*	*163.4*
200,000	1,528	917	550
90,718	*465.6*	*279.3*	*167.6*
300,000	1,581	949	569
136,077	*481.8*	*289.1*	*173.5*
500,000	1,646	988	593
226,795	*501.7*	*301.0*	*180.6*
>500,000	Footnote f	Footnote g	Footnote h
>226,795	*Footnote f*	*Footnote g*	*Footnote h*

Table V3.E3.T10. HD 1.2.1 QD (IBD, PTRD, ILD) for AE with NEWQD > 1.60 lbs [0.73 kg],[a, b] Continued

a	The QD criteria for HD 1.2.1 items are based on the hazards from primary fragments. When stored in structures that may contribute to the debris hazard (secondary fragments), the IBD for HD 1.2.1 items whose MCE is greater than 31 lbs [14.1 kg] is determined by using the larger of two distances: those given in this table for the appropriate explosive weight or those given in Table **V3.E3.T11.** for the appropriate MCE. Structures that may contribute to the debris hazard for storage of HD 1.2.1 AE include: (a) all ECM frontal exposures (side and rear exposures have fixed minimum distances for IBD); (b) all AGS, including (H), (H/R), and (L), unless data or analyses are provided to show that the structural debris contribution is less. Note that ILD and PTRD are based on 36 percent and 60 percent, respectively, of the applicable IBD as determined in this footnote, with ILD minimum distances given in Table **V3.E3.T9.** for applicable PES-ES combinations and PTRD minimum distances given in Table **V3.E3.T9.** for AGS (L). **(Added)(AF)** Secondary debris evaluation is not required for externally-loaded AE on aircraft and stacks of AE on open trucks, trailers, or railcars.
b	See Table **V3.E3.T9.** for a summary of IMD and minimum distances for ILD and PTRD.
c	Explosive Weight = Number of Items*NEWQD.
d	English EQN (IBD in ft, NEWQD in lbs; ln is natural logarithm) 71 lbs < Explosive Weight: IBD = -735.186 + [237.559*(ln(Number of items*NEWQD))] – [4.274*(ln(Number of items*NEWQD))^2], with a minimum of 200 ft — EQN V3.E3.T10-1 *Metric EQN (IBD in m, NEWQD in kg; ln is natural logarithm)* *18.6 kg < Explosive Weight: IBD = -167.648 + [70.345*(ln(Number of items*NEWQD))] – [1.303*(ln(Number of items*NEWQD))^2], with a minimum of 61.0 m* — *EQN V3.E3.T10-2*
e	English EQN (IBD in ft, NEWQD in lbs; exp [x] is e^x) 200 ft < IBD < 2,016 ft: Number of items*NEWQD = exp [27.791 – (600.392 – 0.234*IBD)$^{1/2}$] — EQN V3.E3.T10-3 *Metric EQN (IBD in m, NEWQD in kg; exp [x] is e^x)* *61.0 m < IBD < 614.5 m: Number of items*NEWQD = exp [27.000 – (600.287 – 0.768*IBD)$^{1/2}$]* — *EQN V3.E3.T10-4*
f	Use of equations given in Footnotes d and e to determine other IBD-weight combinations is allowed.
g	PTRD = 60 percent of IBD with a minimum distance equal to the IMD given in Table **V3.E3.T9.** **(Added)(AF)** Table **V3.E3.T18.** for AGS (L). For other structures as either ES or PES, see Table **V3.E3.T9.** See Table **V3.E3.T18.**
h	ILD = 36 percent of IBD with a minimum distance equal to the IMD given in Table **V3.E3.T9.** **(Added)(AF)** Table **V3.E3.T18.** for the applicable PES-ES combination. For structures other than AGS (L) as either ES or PES, see Table **V3.E3.T9.** See Table **V3.E3.T18.**

Table V3.E3.T11. HDD for HD 1.2.1 AE Stored in Structures That Can Contribute to the Debris Hazard[a, b]

MCE	HDD[c, d, e]	PTRD[f]	ILD[g]
(lbs)	(ft)	(ft)	(ft)
[kg]	*[m]*	*[m]*	*[m]*
≤ 31	200	200	200
≤14.1	*61.0*	*61.0*	*61.0*
50	388	233	200
22.7	*118.2*	*70.9*	*61.0*
70	519	311	200
31.8	*158.1*	*94.9*	*61.0*
100	658	395	237
45.4	*200.4*	*120.2*	*72.1*
150	815	489	293
68.0	*248.5*	*149.1*	*89.4*
200	927	556	334
90.7	*282.6*	*169.5*	*101.7*
300	1,085	651	391
136.1	*330.6*	*198.4*	*119.0*
400	1,197	718	431
181.4	*364.7*	*218.8*	*131.3*
450	1,243	746	447
204.1	*378.7*	*227.2*	*136.3*
>450	1,250	750	450
>204.1	*381.0*	*228.6*	*137.2*

a	The QD criteria for HD 1.2.1 items are based on the hazards from primary fragments. When stored in structures that may contribute to the debris hazard (secondary fragments), the IBD for HD 1.2.1 items whose MCE is greater than 31 lbs [14.1 kg] is determined by using the larger of two distances: those given in Table **V3.E3.T10.** for the appropriate explosive weight or those given in this table for the appropriate MCE. Structures that may contribute to the debris hazard for storage of HD 1.2.1 AE include: (a) all ECM frontal exposures (side and rear exposures have fixed minimum distances for IBD); (b) all AGS, including (H), (H/R), and (L), unless data or analyses are provided to show that the structural debris contribution is less. Note that ILD and PTRD are based on 36 percent and 60 percent, respectively, of the applicable IBD, as determined in this footnote with these minimum distances: ILD minimum distances as given in Table **V3.E3.T9.** for applicable PES-ES combinations, and PTRD minimum distances as given in Table **V3.E3.T9.** for AGS (L). **(Added)(AF)** Secondary debris evaluation is not required for externally-loaded AE on aircraft and stacks of AE on open trucks, trailers, or railcars.
b	See Table **V3.E3.T9.** for a summary of IMD and minimum distances for ILD and PTRD.

Table V3.E3.T11. HDD for HD 1.2.1 AE Stored in Structures That Can Contribute to the Debris Hazard,[a, b] Continued

c	English EQN (MCE in lbs, HDD in ft; ln is natural logarithm) 31 lbs < MCE ≤ 450 lbs: HDD = -1,133.9 + [389*ln(MCE)], with a minimum distance of 200 ft	EQN V3.E3.T11-1
	Metric EQN (MCE in kg, HDD in m; ln is natural logarithm) *14.1 kg < MCE ≤ 204 kg: HDD = -251.87 + [118.56*ln(MCE)],with a minimum distance of 61 m*	*EQN V3.E3.T11-2*
d	English EQN (MCE in lbs, HDD in ft; exp [x] is e^x) 200 ft < HDD ≤ 1,250 ft: MCE = exp [(HDD/389) + 2.914]	EQN V3.E3.T11-3
	Metric EQN (MCE in kg, HDD in m; exp [x] is e^x) *61.0 m < HDD < 381 m: MCE = exp [(HDD/118.56) + 2.1244]*	*EQN V3.E3.T11-4*
e	Use of equations given in Footnotes c and d to determine other HDD-MCE combinations is allowed.	
f	PTRD = 60 percent of IBD with a minimum distance equal to the IMD given in Table **V3.E3.T9. (Added)(AF)** Table **V3.E3.T18.** for AGS (L). For other structures as either ES or PES, see Table **V3.E3.T9.** See Table **V3.E3.T18.**	
g	ILD = 36 percent of IBD with a minimum distance equal to the IMD given in Table **V3.E3.T9. (Added)(AF)** Table **V3.E3.T18.** for the applicable PES-ES combination. For structures other than AGS (L) as either ES or PES, see Table **V3.E3.T8.** See Table **V3.E3.T18.**	

Table V3.E3.T12. HD 1.2.2 QD (IBD, PTRD, ILD) for AE with NEWQD ≤ 1.60 lbs [0.73 kg][a, b, c]

Explosive Weight[d]	IBD[e, f, g]	PTRD[h]	ILD[i]
(lbs)	(ft)	(ft)	(ft)
[kg]	*[m]*	*[m]*	*[m]*
1	100	100	100
0.45	*30.5*	*30.5*	*30.5*
1.5	100	100	100
0.68	*30.5*	*30.5*	*30.5*
2	100	100	100
0.9	*30.5*	*30.5*	*30.5*
3	100	100	100
1.4	*30.5*	*30.5*	*30.5*
5	100	100	100
2.3	*30.5*	*30.5*	*30.5*
7	100	100	100
3.2	*30.5*	*30.5*	*30.5*
10	100	100	100
4.5	*30.5*	*30.5*	*30.5*
15	100	100	100
6.8	*30.5*	*30.5*	*30.5*
20	100	100	100
9.1	*30.5*	*30.5*	*30.5*

Table V3.E3.T12. HD 1.2.2 QD (IBD, PTRD, ILD) for AE with NEWQD ≤ 1.60 lbs [0.73 kg],[a, b, c] Continued

Explosive Weight[d]	IBD[e, f, g]	PTRD[h]	ILD[i]
(lbs)	(ft)	(ft)	(ft)
[kg]	*[m]*	*[m]*	*[m]*
30	107	100	100
13.6	*32.7*	*30.5*	*30.5*
50	118	100	100
22.7	*36.1*	*30.5*	*30.5*
70	127	100	100
31.8	*38.8*	*30.5*	*30.5*
100	138	100	100
45.4	*42.1*	*30.5*	*30.5*
150	152	100	100
68.0	*46.2*	*30.5*	*30.5*
200	162	100	100
90.7	*49.5*	*30.5*	*30.5*
300	179	107	100
136.1	*54.6*	*32.7*	*30.5*
500	202	121	100
226.8	*61.7*	*37.0*	*30.5*
700	219	132	100
317.5	*66.8*	*40.1*	*30.5*
1,000	238	143	100
453.6	*72.7*	*43.6*	*30.5*
1,500	262	157	100
680.4	*79.8*	*47.9*	*30.5*
2,000	279	168	101
907.2	*85.2*	*51.1*	*30.7*
3,000	306	183	110
1,361	*93.2*	*55.9*	*33.5*
5,000	341	205	123
2,268	*104.0*	*62.4*	*37.4*
7,000	366	220	132
3,175	*111.6*	*67.0*	*40.2*
10,000	394	236	142
4,536	*120.0*	*72.0*	*43.2*
15,000	427	256	154
6,804	*130.1*	*78.1*	*46.8*
20,000	451	271	162
9,072	*137.5*	*82.5*	*49.5*
30,000	487	292	175
13,608	*148.5*	*89.1*	*53.5*

Table V3.E3.T12. HD 1.2.2 QD (IBD, PTRD, ILD) for AE with NEWQD ≤ 1.60 lbs [0.73 kg],[a, b, c] Continued

Explosive Weight[d]	IBD[e, f, g]	PTRD[h]	ILD[i]
(lbs)	(ft)	(ft)	(ft)
[kg]	*[m]*	*[m]*	*[m]*
50,000	535	321	193
22,680	*163.0*	*97.8*	*58.7*
70,000	568	341	204
31,751	*173.1*	*103.8*	*62.3*
100,000	604	362	217
45,359	*184.1*	*110.5*	*66.3*
150,000	647	388	233
68,039	*197.1*	*118.3*	*71.0*
200,000	678	407	244
90,718	*206.6*	*124.0*	*74.4*
300,000	723	434	260
136,077	*220.5*	*132.3*	*79.4*
500,000	783	470	282
226,795	*238.8*	*143.3*	*86.0*
>500,000	Footnote g	Footnote h	Footnote i
>226,795	*Footnote g*	*Footnote h*	*Footnote i*

a	The QD criteria for HD 1.2.2 items are based on the hazards from primary fragments.
b	See Table **V3.E3.T9.** for a summary of IMD and minimum distances for ILD and PTRD.
c	See paragraph **V3.E3.2.11.** for storage and operations involving limited quantities of HD 1.2.2 without the need for siting as a PES.
d	Explosive Weight = Number of Items*NEWQD.
e	English EQN (IBD in ft, NEWQD in lbs; ln is natural logarithm) 20 lbs < Explosive Weight: IBD = 101.649 – [15.934*(ln(Number of items*NEWQD))] + [5.173*(ln(Number of items*NEWQD))^2], with a minimum of 100 ft — EQN V3.E3.T12-1 *Metric EQN (IBD in m, NEWQD in kg; ln is natural logarithm)* *9.1 kg < Explosive Weight: IBD = 28.127 – [2.364*(ln(Number of items*NEWQD))] + [1.577*(ln(Number of items*NEWQD))^2], with a minimum of 30.5 m* — *EQN V3.E3.T12-2*
f	English EQN (IBD in ft, NEWQD in lbs; exp [x] is e^x) 100 ft < IBD < 1,240 ft: Number of items*NEWQD = exp [1.5401 + (-17.278 + 0.1933*IBD)$^{1/2}$] — EQN V3.E3.T12-3 *Metric EQN (IBD in m, NEWQD in kg; exp [x] is e^x)* *30.5 m < IBD < 378 m: Number of items*NEWQD = exp [0.7495 + (-17.274 + 0.6341*IBD)$^{1/2}$]* — *EQN V3.E3.T12-4*
g	Use of equations given in Footnotes e and f to determine other IBD-weight combinations is allowed.

Table V3.E3.T12. HD 1.2.2 QD (IBD, PTRD, ILD) for AE with NEWQD ≤ 1.60 lbs [0.73 kg],[a, b, c] Continued

h	PTRD = 60 percent of IBD with a minimum distance equal to the IMD given in Table **V3.E3.T9.** for AGS (L). For other structures as either an ES or PES, see Table **V3.E3.T9.**
i	ILD = 36 percent of IBD with a minimum distance equal to the IMD given in Table **V3.E3.T9.** for the applicable PES-ES combination. For structures other than AGS (L) as either an ES or PES, see Table **V3.E3.T9.**

Table V3.E3.T13. HD 1.2.1, 1.2.2, and 1.2.3 Mixing Rules

Hazard Subdivision Involved	Distances to be Applied
1.2.1	Apply HD 1.2.1 distances[a]
1.2.2	Apply HD 1.2.2 distances[b]
1.2.3	Apply HD 1.2.3 distances[c]
1.2.1 + 1.2.2	Apply greater of two distances
1.2.1 + 1.2.3	Apply greater of two distances
1.2.2 + 1.2.3	Apply greater of two distances

a	HD 1.2.1 distances given in Tables **V3.E3.T9.**, **V3.E3.T10.**, and **V3.E3.T11.**
b	HD 1.2.2 distances given in Tables **V3.E3.T9.** and **V3.E3.T12.**
c	HD 1.2.3 distances given in Table **V3.E3.T14.** (See paragraph **V3.E3.2.13.**)

V3.E3.2.13.3.2. If the HD 1.2.3 AE MCE is ≤ than 1.6 lbs [0.73 kg], consider the items as HD 1.2.2, based on the total NEWQD present.

V3.E3.2.14. For storage of mixed HD 1.2.3 AE, multiply the NEWQD for the HD 1.2.3 items by the corresponding number of HD 1.2.3 items and use HD 1.3 QD with the HFD for the mixture based on the largest HFD for the HD 1.2.3 AE in storage. Use the distances given in Table **V3.E3.T13.**, when HD 1.2.3 AE is located with any other HD 1.2 subdivision. The HD 1.2.3 AE is considered HD 1.2 (HD 1.2.1 or HD 1.2.2, according to MCE) for QD purposes, when HD 1.2.3 AE is located with any other HD AE. The mixing rules provided in paragraph **V1.E7.2.3.** then apply to the combination of the HDs.

V3.E3.3. HD 1.3. HD 1.3 includes items that burn vigorously with little or no possibility of extinguishment in storage situations. Explosions normally will be confined to pressure ruptures of containers and will not produce propagating shock waves or damaging blast overpressure beyond the magazine distance specified in Table **V3.E3.T14.** A severe hazard of spread of fire may result from tossing about of burning container materials, propellant, or other flaming debris.

V3.E3.3. **(Added)(AF)** Table **V3.E3.T19.** provides a summary matrix of all the paired relationships for HD 1.3.

V3.E3.4. HD 1.4

V3.E3.4.1. HD 1.4 AE present a fire hazard with minimal blast, fragmentation, or toxic hazards. Separate facilities for storage and handling of these AE will be located in accordance with Table **V3.E3.T15.**

V3.E3.4.2. In mixed storage, the NEWQD of HD 1.4 is not additive, as indicated in paragraph **V1.E7.2.3.1.1.** However, QD criteria for each HD present, including HD 1.4, must be determined and the largest value used.

V3.E3.4.3. HD 1.4S AE, as described in paragraph **V1.E8.5.5.**, may be stored, to include associated handling, without regard to the QD criteria in Table **V3.E3.T15.**

V3.E3.4.4. **(Added)(AF)** Table **V3.E3.T19.** provides a summary matrix of all the paired relationships for HD 1.4.

V3.E3.5. HD 1.6. QD separations for HD 1.6 AE are based on the storage location and configuration. This information is detailed in Table **V3.E3.T16.** A maximum of 500,000 lbs [226,795 kg] NEWQD is permitted at any one location. Any special storage configuration and siting approved for HD 1.1 AE may be used for storage of like explosive weights of HD 1.6 AE.

V3.E3.5. **(Added)(AF)** HD 1.6 – Fuzed HD 1.6 items must contain either an EIDS fuze or a non-explosive fuze (i.e., the fuze contains no explosives), otherwise the item is classified as HD 1.2.3.

V3.E3.6. HD 6.1

V3.E3.6.1. HD 6.1 includes items that contain only toxic chemical or riot control agents. AE containing both explosives and toxic chemical or riot control agents may be hazard classified as HD 1.1 through HD 1.4, based on testing in accordance with parts 171-177 of Title 49, CFR.

V3.E3.6.2. Hazard zones for toxic CAs are determined by the relative toxicity of the agents, the amount released to the atmosphere and the rate at which they are released (e.g., evaporation, pressure, or explosive dispersal), terrain features, and meteorological conditions. Hazard zone calculations are based on MCE, using DDESB Technical Paper No. 10. **Volume 6 – Enclosure 4** provides specific criteria associated with toxic CAs.

V3.E3.6.3. When siting AE containing toxic CAs, both the explosives and toxic CA hazards are evaluated with the greatest QD governing siting.

Table V3.E3.T14. HD 1.3 QD[a, b]

NEWQD	IBD & PTRD[c]	Aboveground IMD & ILD[d]
(lbs)	(ft)	(ft)
[kg]	*[m]*	*[m]*
≤ 1000[e]	75	50
≤ 453.59[e]	*22.9*	*15.2*
1,500	82	56
680.4	*25.0*	*17.0*
2,000	89	61
907.2	*27.2*	*18.5*

Table V3.E3.T14. HD 1.3 QD,[a, b] Continued

NEWQD	IBD & PTRD[c]	Aboveground IMD & ILD[d]
(lbs)	(ft)	(ft)
[kg]	*[m]*	*[m]*
3,000	101	68
1,360.8	*30.7*	*20.8*
5,000	117	80
2,268.0	*35.8*	*24.3*
7,000	130	88
3,175.1	*39.6*	*26.9*
10,000	145	98
4,535.9	*44.2*	*30.0*
15,000	164	112
6,803.9	*50.1*	*34.0*
20,000	180	122
9,071.8	*54.8*	*37.2*
30,000	204	138
13,607.7	*62.3*	*42.2*
50,000	240	163
22,679.5	*73.2*	*49.5*
70,000	268	181
31,751.3	*81.6*	*55.1*
100,000	300	204
45,359.0	*91.4*	*62.0*
150,000	346	234
68,038.5	*105.3*	*71.4*
200,000	385	260
90,718.0	*117.4*	*79.3*
300,000	454	303
136,077.0	*138.4*	*92.5*
500,000	569	372
226,795.0	*173.6*	*113.4*
700,000	668	428
317,513.0	*203.8*	*130.5*
1,000,000	800	500
453,590.0	*244.0*	*152.3*
1,500,000	936	577
680,385.0	*285.3*	*175.8*
2,000,000	1,008	630
907,180.0	*307.2*	*192.0*

Table V3.E3.T14. HD 1.3 QD[a, b] Continued

a	For reasons of operational necessity, and in accordance with DoD Component-defined procedures, limited quantities of items in this HD, such as document destroyers, signaling devices, riot control munitions, and the like, may be stored without the need for siting as a PES in accordance with DoD Component fire protection requirements in facilities such as hangars, arms rooms, security alert force rooms, and manufacturing or operating buildings. Operations involving limited quantities of HD 1.3 items are also permitted without the need for siting as a PES, in accordance with DoD Component-defined procedures and for reasons of operational necessity. DoD Component procedures should address items such as NEWQD limits, documentation requirements, approval process, and LPS requirements.		
b	Existing ECM, regardless of orientation, that meet the construction and barricading requirements of **Volume 2 – Enclosure 5** and are sited one from another for a minimum of 100 lbs [45.4 kg] NEWQD of HD 1.1 using the ECM-to-ECM QD criteria in Table **V3.E3.T6.**, may be used to their physical storage capacity for HD 1.3, provided all other QD relationships are sited in accordance with this table for the HD 1.3 NEWQD.		
c	English EQNs (NEWQD in lbs, D in ft; exp [x] is e^x, ln is natural logarithm)		
	NEWQD $\leq$ 1,000 lbs:	$D_{IBD,PTRD}$ = 75 ft	
	1,000 lbs < NEWQD $\leq$ 96,000 lbs:	$D_{IBD,PTRD}$ = exp [2.47 + 0.2368* (ln(NEWQD)) + 0.00384* $(\ln(NEWQD))^2$], with a minimum distance of 75 ft	EQN V3.E3.T14-1
	96,000 lbs < NEWQD $\leq$ 1,000,000 lbs:	$D_{IBD,PTRD}$ = exp [7.2297 – 0.5984* (ln(NEWQD)) + 0.04046* $(\ln(NEWQD))^2$]	EQN V3.E3.T14-2
	1,000,000 lbs < NEWQD:	$D_{IBD,PTRD} = 8*NEWQD^{1/3}$	EQN V3.E3.T14-3
	75 ft $\leq D_{IBD,PTRD} \leq$ 296 ft:	NEWQD = exp [-30.833 + (307.465 + 260.417* $(\ln(D_{IBD,PTRD})))^{1/2}$], with a minimum NEWQD of 1,000 lbs	EQN V3.E3.T14-4
	296 ft < $D_{IBD,PTRD} \leq$ 800 ft:	NEWQD = exp [7.395 + (-124.002 + 24.716* $(\ln(D_{IBD,PTRD})))^{1/2}$]	EQN V3.E3.T14-5
	800 ft < $D_{IBD,PTRD}$:	NEWQD = $(D_{IBD,PTRD})^3/512$	EQN V3.E3.T14-6
	Metric EQNs (NEWQD in kg, D in m; exp [x] is e^x, ln is natural logarithm)		
	NEWQD $\leq$ 453.6 kg:	*$D_{IBD,PTRD}$ = 22.9 m*	
	453.6 kg < NEWQD $\leq$ 43,544.6 kg:	*$D_{IBD,PTRD}$ = exp [1.4715 + 0.2429* (ln(NEWQD)) + 0.00384* $(\ln(NEWQD))^2$], with a minimum distance of 22.9 m*	*EQN V3.E3.T14-7*
	43,544.6 kg < NEWQD $\leq$ 453,590 kg:	*$D_{IBD,PTRD}$ = exp [5.5938 – 0.5344* (ln(NEWQD)) + 0.04046* $(\ln(NEWQD))^2$]*	*EQN V3.E3.T14-8*
	453,590 kg < NEWQD:	*$D_{IBD,PTRD} = 3.17*NEWQD^{1/3}$*	*EQN V3.E3.T14-9*
	22.9 m $\leq D_{IBD,PTRD} \leq$ 90.2 m:	*NEWQD = exp [-31.628 + (617.102 + 260.417* $(\ln(D_{IBD,PTRD})))^{1/2}$], with a minimum NEWQD of 453.6 kg*	*EN V3.E3.T14-10*
	90.2 m < $D_{IBD,PTRD} \leq$ 243.8 m:	*NEWQD = exp [6.604 + (-94.642 + 24.716*$(\ln(D_{IBD,PTRD})))^{1/2}$]*	*EQN V3.E3.T14-11*
	243.8 m < $D_{IBD,PTRD}$:	*NEWQD = $(D_{IBD,PTRD})^3/131.964$*	*EQN V3.E3.T14-12*

Table V3.E3.T14. HD 1.3 QD[a, b] Continued

d	English EQNs (NEWQD in lbs, D in ft; exp [x] is e^x, ln is natural logarithm)		
	NEWQD $\leq$ 1,000 lbs:	$D_{IMD,ILD}$ = 50 ft	
	1,000 lbs < NEWQD $\leq$ 84,000 lbs:	$D_{IMD,ILD}$ = exp [2.0325 + 0.2488* (ln(NEWQD)) + 0.00313* $(\ln(NEWQD))^2$], with a minimum distance of 50 ft	EQN V3.E3.T14-13
	84,000 lbs < NEWQD $\leq$ 1,000,000 lbs:	$D_{IMD,ILD}$ = exp [4.338 – 0.1695* (ln(NEWQD)) + 0.0221* $(\ln(NEWQD))^2$]	EQN V3.E3.T14-14
	1,000,000 lbs < NEWQD:	$D_{IMD,ILD} = 5*NEWQD^{1/3}$	EQN V3.E3.T14-15
	50 ft $\leq D_{IMD,ILD} \leq$ 192 ft:	NEWQD = exp [-39.744 + (930.257 + $319.49*(\ln(D_{IMD,ILD})))^{1/2}$], with a minimum NEWQD of 1,000 lbs	EQN V3.E3.T14-16
	192 ft < $D_{IMD,ILD} \leq$ 500 ft:	NEWQD = exp [3.834 + (-181.58 + $45.249*(\ln(D_{IMD,ILD})))^{1/2}$]	EQN V3.E3.T14-17
	500 ft < $D_{IMD,ILD}$:	NEWQD = $(D_{IMD,ILD})^3/125$	EQN V3.E3.T14-18
	Metric EQNs (NEWQD in kg, D in m; exp [x] is e^x, ln is natural logarithm)		
	NEWQD $\leq$ 453.6 kg:	*$D_{IMD,ILD}$ = 15.2 m*	
	453.6 kg < NEWQD $\leq$ 38,101.6 kg:	*$D_{IMD,ILD}$ = exp [1.0431 + 0.2537* (ln(NEWQD)) + 0.00313* $(\ln(NEWQD))^2$], with a minimum distance of 15.2 m*	*EQN V3.E3.T14-19*
	38,101.6 kg < NEWQD $\leq$ 453,590 kg:	*$D_{IMD,ILD}$ = exp [3.0297 – 0.1346* (ln(NEWQD)) + 0.0221* $(\ln(NEWQD))^2$]*	*EQN V3.E3.T14-20*
	453,590 kg < NEWQD:	*$D_{IMD,ILD} = 1.98*NEWQD^{1/3}$*	*EQN V3.E3.T14-21*
	15.2 m $\leq D_{IMD,ILD} \leq$ 58.4 m:	*NEWQD = exp [-40.527 + (1309.19 + $319.49*(\ln(D_{IMD,ILD})))^{1/2}$], with a minimum NEWQD of 453.6 kg*	*EQN V3.E3.T14-22*
	58.4 m < $D_{IMD,ILD} \leq$ 152.4 m:	*NEWQD = exp [3.045 + (-127.817 + $45.249*(\ln(D_{IMD,ILD})))^{1/2}$]*	*EQN V3.E3.T14-23*
	152.4 m < $D_{IMD,ILD}$:	*NEWQD = $(D_{IMD,ILD})^3/7.804$*	*EQN V3.E3.T14-24*
e	For quantities less than 1,000 lbs [453.59 kg], the required distances are those specified for 1,000 lbs [453.59 kg]. The use of lesser distances may be approved when supported by test data or analysis.		

Table V3.E3.T15. HD 1.4 QD[a]

NEWQD[b]	IBD/PTRD[c]	ILD[d, e]	AGS (L) IMD[e]	AGS(H) & (H/R) IMD[e, f]	ECM IMD[e, k]
(lbs)	(ft)	(ft)	(ft)	(ft)	(ft)
[kg]	*[m]*	*[m]*	*[m]*	*[m]*	*[m]*
≤ 3000[g]	75	50	50	0 to and from	0 to and from the sides and rear; see Footnote j for the front
≤ 1,360.8[g]	*22.9*	*15.3*	*15.3*		
>3000[h]	100	100/50[i]	100/50[i]		
>1,360.8[h]	*30.5*	*30.5/15.3[i]*	*30.5/15.3[i]*		

a	HD 1.4 AE may be stored in a general supplies warehouse area rather than in an AE storage area. When storing in a general supplies warehouse area, any weatherproof warehouse structure may serve as an HD 1.4 magazine. Such a structure will be separated from all other warehouses in accordance with the AGS (L) IMD column of this table.
b	See paragraph **V1.E7.2.3.1.1.** for the applicability of HD 1.4 QD criteria and the determination of NEWQD when HD 1.4 and other HD AE are located in the same site.
c	IBD and PTRD are 50 ft [15.3 m] from the sides and rear of an ECM. IBD and PTRD are 50 ft [15.3 m] from an AGS (H), an AGS (H/R), and an ECM front that meets the definition of AGS (H) **(Added)(AF)** as defined in the legend for Table **V3.E3.T18.**; doors and other openings will be barricaded in accordance with section **V2.E5.4.**, or the IBD or PTRD column of this table applied from these doors and openings.
d	ILD is 0 ft from the sides and rear of an ECM. ILD is 0 ft from an AGS (H), an AGS (H/R), and an ECM front that meets the definition of AGS (H); doors and other openings will be barricaded in accordance with section **V2.E5.4.**, or the ILD column of this table applied from these doors and openings. **(Added)(AF)** AGS (H) or AGS (H/R) as defined in the legend for Table **V3.E3.T18.**
e	Magazines storing only HD 1.4 AE may be located at these IMD or ILD from all other magazines or operating buildings regardless of the HD or NEWQD authorized in those adjacent structures. Because the HD 1.4 AE may be destroyed as the result of an accident involving the assets in those adjacent structures, the DoD Component on a case-by-case basis must accept application of this provision with consideration given to the value of HD 1.4 assets at risk. **(Added)(AF)** Document the commander's risk acceptance by letter (i.e., signed by the commander stating they understand and accept the potential loss of the HD 1.4 stocks and the storage structure in the event of a mishap in an adjacent explosives facility) and submitted as part of the ESP. A new risk acceptance letter is not required when a new adjacent explosives facility is sited, as long as the original letter documented that other such structures might be added in the future.
f	Doors and other openings will be barricaded in accordance with section **V2.E5.4.**, or the AGS (L) IMD column of this table applied to and from these doors and openings.
g	For reasons of operational necessity and in accordance with DoD Component-defined procedures, limited quantities of HD 1.4 AE (e.g., small arms AE and riot control munitions) may be stored in accordance with DoD Component fire protection requirements within facilities (e.g., hangars, arms rooms, security alert force rooms, and manufacturing or operating buildings) without the need for siting as a PES. Alternatively, operationally necessary HD 1.4 AE may be stored in small magazines external to those facilities without the need for an explosives site plan. Operations involving limited quantities of HD 1.4 items also are permitted without the need for siting as a PES, in accordance with DoD Component-defined procedures and for reasons of operational necessity. DoD Component procedures should address items such as NEWQD limits, documentation requirements, approval process, and LPS requirements.
h	There is no upper limit on the NEWQD specifically required for safety reasons.

Table V3.E3.T15. HD 1.4 QD[a]

i	Use the smaller distance when the ES is of non-combustible construction. **(Added)(AF)** Treat combat aircraft and explosives-loaded cargo aircraft as non-combustible structures.
j	Apply the appropriate AGS column of this table based on whether the ECM front meets the definition of AGS (L) or AGS (H). **(Added)(AF)** AGS (L) or AGS (H) as defined in the legend for Table **V3.E3.T18.**
k	**(Added)(AF)** ECMs may be used to their physical capacity for HD 1.4 provided they meet separation requirements for a minimum of 100 lbs of HD 1.1, and provided separations to other exposures comply with applicable QD criteria.

Table V3.E3.T16. HD 1.6 QD

NEWQD	Aboveground		ECM		
	IBD or PTRD[a, b, c]	IMD or ILD[a, c, d]	IBD or PTRD	ILD	IMD
(lbs)	(ft)	(ft)	(ft)	(ft)	(ft)
[kg]	*[m]*	*[m]*	*[m]*	*[m]*	*[m]*
≤100[e]	37	23	Footnote c	Footnote c	Footnote c
<45.4[e]	*11.3*	*7.0*			
150	43	27			
68.0	*12.9*	*8.1*			
200	47	29			
90.7	*14.3*	*8.9*			
300	54	33			
136.1	*16.3*	*10.2*			
500	63	40			
226.8	*19.4*	*12.1*			
700	71	44			
317.5	*21.7*	*13.5*			
1,000	80	50			
453.6	*24.4*	*15.2*			
1,500	92	57			
680.4	*27.9*	*17.4*			
2,000	101	63			
907.2	*30.7*	*19.2*			
3,000	115	72			
1,360.8	*35.2*	*22.0*			
5,000	137	85			
2,268.0	*41.7*	*26.1*			
7,000	153	96			
3,175.1	*46.6*	*29.2*			
10,000	172	108			
4,535.9	*52.5*	*32.8*			
15,000	197	123			
6,803.9	*60.1*	*37.6*			
20,000	217	136			
9,071.8	*66.2*	*41.4*			
30,000	249	155			
13,607.7	*75.8*	*47.4*			
50,000	295	184			
22,679.5	*89.8*	*56.1*			
70,000	330	206			
31,751.3	*100.5*	*62.8*			

Table V3.E3.T16. HD 1.6 QD, Continued

NEWQD	Aboveground		ECM		
	IBD or PTRD[a, b, c]	IMD or ILD[a, c, d]	IBD or PTRD	ILD	IMD
(lbs)	(ft)	(ft)	(ft)	(ft)	(ft)
[kg]	*[m]*	*[m]*	*[m]*	*[m]*	*[m]*
100,000	371	232	Footnote c	Footnote c	Footnote c
45,359.0	*113.2*	*70.7*			
150,000	425	266			
68,038.5	*129.6*	*81.0*			
200,000	468	292			
90,718.0	*142.6*	*89.1*			
300,000	536	335			
136,077.0	*163.2*	*102.0*			
500,000	635	397			
226,795.0	*193.5*	*121.0*			

a	Applicable minimum distances:
	English EQNs (D in ft, NEWQD in lbs)
	For IBD or PTRD, based on the NEWQD for the largest single round of AE:
	$D_{IBD,PTRD} = 40*W^{1/3}$ EQN V3.E3.T16-1
	For IMD or ILD, based on the NEWQD for the largest single round of AE:
	$D_{IMD, ILD} = 18*W^{1/3}$ EQN V3.E3.T16-2
	Metric EQNs (D in m, NEWQD in kg)
	For IBD or PTRD, based on the NEWQD for the largest single round of AE:
	$D_{IBD,PTRD} = 15.87*Q^{1/3}$ *EQN V3.E3.T16-3*
	For IMD or ILD, based on the NEWQD for the largest single round of AE:
	$D_{IMD, ILD} = 7.14*Q^{1/3}$ *EQN V3.E3.T16-4*
b	English EQNs (D in ft, NEWQD in lbs)
	$D_{IBD,PTRD} = 8*W^{1/3}$ EQN V3.E3.T16-5
	$NEWQD = (D_{IBD,PTRD})^3/512$ EQN V3.E3.T16-6
	Metric EQNs (D in m, NEWQD in kg)
	$D_{IBD,PTRD} = 3.17*Q^{1/3}$ *EQN V3.E3.T16-7*
	$NEWQD = (D_{IBD,PTRD})^3/31.86$ *EQN V3.E3.T16-8*
c	For HD 1.6 AE packed in non-flammable pallets or packing and stored in an ECM, provided it is acceptable to the DoD Component and the DDESB on a site-specific basis, these QD apply unless a lesser distance is permitted by this table for AGSs (these lesser distances can be applied to ECM storage):
	$D_{IBD,PTRD}$ = 100 ft [30.5 m];
	D_{ILD} = 50 ft [15.2 m];
	D_{IMD} = no specific requirement.

Table V3.E3.T16. HD 1.6 QD, Continue

d	English EQNs (D in ft, NEWQD in lbs) $D_{IMD, ILD} = 5*W^{1/3}$ EQN V3.E3.T16-9 $NEWQD = (D_{IMD, ILD})^3/125$ EQN V3.E3.T16-10 *Metric EQNs (D in m, NEWQD in kg)* $D_{IMD, ILD} = 1.98*Q^{1/3}$ *EQN V3.E3.T16-11* $NEWQD = (D_{IMD, ILD})^3/7.76$ *EQN V3.E3.T16-12*
e	For quantities less than 100 lbs [45.4 kg], the required distances are those specified for 100 lbs [45.4 kg]. The use of lesser distances may be approved when supported by test data or analyses.

Table V3.E3.T17. (Added)(AF) HD 1.1 QD Criteria. Notes (12) (24)

LINE	COLUMN		1	2	3	4	5	6	7	8
	TO: EXPOSED SITE (ES)	FROM: POTENTIAL EXPLOSION SITE (PES)	EARTH-COVERED MAGAZINE (4)				ABOVE GROUND MAGAZINE (6)		BARRICADED MODULES	
			S	R	FB (3)	FU	B (3)	U	B (5)	U
1	EARTH-COVERED MAGAZINE (7-BAR) (4)	S	K1.25	K1.25	K2.75	K2.75	K4.5	K4.5	K4.5	K4.5
2		R	K1.25	K1.25	K2	K2	K4.5	K4.5	K4.5	K4.5
3		FU	K2.75	K2	K6	K6	K6	K6	K6	K6
4		FB (3)	K2.75	K2	K4.5	K6	K4.5	K6	K4.5	K6
5	EARTH-COVERED MAGAZINE (3-BAR) (4)	S	K1.25	K1.25	K2.75	K2.75	K6	K6	K6	K6
6		R	K1.25	K1.25	K2	K2	K6	K6	K6	K6
7		FU	K4.5	K4.5	K6	K9	K6	K9	K6	K9
8		FB (3)	K4.5	K4.5	K6	K6	K6	K6	K6	K6
9	EARTH-COVERED MAGAZINE (UNDEFINED) (4)	S	K1.25 (1) K2 (2)	K1.25 (1) K2 (2)	K4.5 (1) K6 (2)	K4.5 (1) K6 (2)	K6	K6	K6	K6
10		R	K1.25	K1.25	K2	K2	K6	K6	K6	K6
11		FU	K6	K6	K6	K11	K6	K11	K6	K11
12		FB (3)	K6	K6	K6	K6	K6	K6	K6	K6
13	ABOVE GROUND MAGAZINE (6)	U	K6	K6	K6	K11	K6	K11	K6	K11
14		B (3)	K6	K6	K6	K6	K6	K6	K6	K6
15	BARRICADED MODULES	U	K6	K6	K6	K11	K6	K11	K1.1 (7)	K11
16		B (5)	K1.25	K1.25	K6	K6	K6	K6	K1.1 (7)	K1.1 (7)
17	OPERATING LOCATION	U	ILD (8)	ILD (8)	ILD (8)	ILD (8)	ILD (10)	ILD (10)	ILD (10)	ILD (10)
18		B (3)	ILD (9)	ILD (9)	ILD (9)	ILD (9)	ILD (11)	ILD (11)	ILD (11)	ILD (11)
19	COMBAT AIRCRAFT PARKING AREA	SINGLE A/C	(13)	(13)	(13)	(13)	(13)	(13)	(13)	(13)
20		A/C GROUP								
21	EXPLOSIVES CARGO AIRCRAFT PARKING AREA		(13)(16)	(13)(16)	(13)(16)	(13)(16)	(13)(16)	(13)(16)	(13)(16)	(13)(16)
22	FLIGHTLINE MUNITIONS HOLDING AREA		K6	K6	K6	K11	K6	K11	K6	K11
23	FIRST GENERATION HARDENED AIRCRAFT SHELTER (30) (29)	S/R	K5	K5	K8	K8	K8	K8	K8	K8
24		F	K18	K18	K18	K18	K18	K18	K18	K18
25	SECOND OR THIRD GENERATION HARDENED AIRCRAFT SHELTER (30) (29)		K5	K5	K8	K8	K8	K8	K8	K8
26	KOREAN TAB VEE (30) (29)	S	(13)	(13)	(13)	(13)	(13)	(13)	(13)	(13)
27		R	(13)	(13)	(13)	(13)	(13)	(13)	(13)	(13)
28		F	(13)	(13)	(13)	(13)	(13)	(13)	(13)	(13)
29	KOREAN FLOW-THROUGH (30)	S	(13)	(13)	(13)	(13)	(13)	(13)	(13)	(13)
30		F/R	(13)	(13)	(13)	(13)	(13)	(13)	(13)	(13)
31	FIRST GENERATION MAINTENANCE HAS (30) (29)	S/R	K5	K5	K8	K8	K8	K8	K8	K8
32		F	K18	K18	K18	K18	K18	K18	K18	K18
33	SECOND OR THIRD GENERATION MAINTENANCE HAS (30) (29)		K5	K5	K8	K8	K8	K8	K8	K8
34	NON-EXPLOSIVES AIRCRAFT PARKING AREA (17)	NON-DoD	IBD (19)	IBD (19)	IBD (19)	IBD (19)	IBD (19)	IBD (19)	IBD (19)	IBD (19)
35		DoD (18)	(13)	(13)	(13)	(13)	(13)	(13)	(13)	(13)
36	MILITARY USE ONLY	RUNWAY	PTRD (19) (21)	PTRD (19) (21)	PTRD (19) (21)	PTRD (19) (21)	PTRD (19) (21)	PTRD (19) (21)	PTRD (19) (21)	PTRD (19) (21)
37		TAXIWAY	ILD (8) (21)	ILD (8) (21)	PTRD (19) (21)	PTRD (19) (21)	PTRD (19) (21)	PTRD (19) (21)	PTRD (19) (21)	PTRD (19) (21)
38	JOINT MILITARY/ NON-MILITARY USE	RUNWAY	IBD (19)	IBD (19)	IBD (19)	IBD (19)	IBD (19)	IBD (19)	IBD (19)	IBD (19)
39		TAXIWAY	PTRD (19)	PTRD (19)	PTRD (19)	PTRD (19)	PTRD (19)	PTRD (19)	PTRD (19)	PTRD (19)
40	A/C PASSENGER LOAD/UNLOAD AREA	OPEN (22)	PTRD (19)	PTRD (19)	PTRD (19)	PTRD (19)	PTRD (19)	PTRD (19)	PTRD (19)	PTRD (19)
41		STRUCTURE (23)	IBD (19)	IBD (19)	IBD (19)	IBD (19)	IBD (19)	IBD (19)	IBD (19)	IBD (19)
42	COMBAT AIRCRAFT RELATED FACILITIES		ILD (36) (37)	ILD (36) (37)	ILD (36) (37)	ILD (36) (37)	ILD (36) (37)	ILD (36) (37)	ILD (36) (37)	ILD (36) (37)
43	EXPLOSIVES CARGO AIRCRAFT RELATED FACILITIES		ILD (36) (38)	ILD (36) (38)	ILD (36) (38)	ILD (36) (38)	ILD (36) (38)	ILD (36) (38)	ILD (36) (38)	ILD (36) (38)
44	MUNITIONS STORAGE AREA RELATED FACILITIES		ILD (36)(39)	ILD (36)(39)	ILD (36)(39)	ILD (36)(39)	ILD (36)(39)	ILD (36)(39)	ILD (36)(39)	ILD (36)(39)
45	RELATED FACILITY		ILD (36)(39)	ILD (36)(39)	ILD (36)(39)	ILD (36)(39)	ILD (36)(39)	ILD (36)(39)	ILD (36)(39)	ILD (36)(39)
46	PUBLIC TRAFFIC ROUTE		PTRD (35)	PTRD (35)	PTRD (35)	PTRD (35)	PTRD (35)	PTRD (35)	PTRD (35)	PTRD (35)
47	INHABITED BUILDING		IBD (35)	IBD (35)	IBD (35)	IBD (35)	IBD (35)	IBD (35)	IBD (35)	IBD (35)

Table V3.E3.T17. (Added)(AF) HD 1.1 QD Criteria, Continued. Notes (12) (24)

	COLUMN		9	10	11	12	13	14
LINE	TO: EXPOSED SITE (ES)	FROM: POTENTIAL EXPLOSION SITE (PES)	OPERATING LOCATION		COMBAT AIRCRAFT PARKING AREA		EXPLOSIVES CARGO AIRCRAFT PARKING AREA	FLIGHTLINE MUNITIONS HOLDING AREA
1	EARTH-COVERED MAGAZINE (7-BAR) (4)	S	K4.5	K4.5	USE ABOVE GROUND MAGAZINE COLUMNS		USE ABOVE GROUND MAGAZINE COLUMNS	USE ABOVE GROUND MAGAZINE COLUMNS
2		R	K4.5	K4.5				
3		FU	K6	K6				
4		FB (3)	K4.5	K6				
5	EARTH-COVERED MAGAZINE (3-BAR) (4)	S	K6	K6				
6		R	K6	K6				
7		FU	K6	K9				
8		FB (3)	K6	K6				
9	EARTH-COVERED MAGAZINE (UNDEFINED) (4)	S	K6	K6				
10		R	K6	K6				
11		FU	K6	K11				
12		FB (3)	K6	K6				
13	ABOVE GROUND MAGAZINE (6)	U	K6	K11				
14		B (3)	K6	K6				
15	BARRICADED MODULES	U	K6	K11				
16		B (5)	K6	K6				
17	OPERATING LOCATION	U	ILD (10)	ILD (10)				
18		B (3)	ILD (11)	ILD (11)				
19	COMBAT AIRCRAFT PARKING AREA	SINGLE A/C	(13)	(13)	IMD (13) (14) (16)		(13) (16)	(13) (16)
20		A/C GROUP			ILD (10) (13) (15)			
21	EXPLOSIVES CARGO AIRCRAFT PARKING AREA		(13)(16)	(13)(16)	USE ABOVE GROUND MAGAZINE COLUMNS		USE ABOVE GROUND MAGAZINE COLUMNS	USE ABOVE GROUND MAGAZINE COLUMNS
22	FLIGHTLINE MUNITIONS HOLDING AREA		K6	K11				
23	FIRST GENERATION HARDENED AIRCRAFT SHELTER (30) (29)	S/R	K8	K8	K8 (26)		K8 (27)	K8 (27)
24		F	K18	K18	K18 (25)		K18 (28)	K18 (28)
25	SECOND OR THIRD GENERATION HARDENED AIRCRAFT SHELTER (30) (29)		K8	K8	K8 (26)		K8 (27)	K8 (27)
26	KOREAN TAB VEE (30) (29)	S	(13)	(13)	(13) (31)		(13) (16)	(13) (16)
27		R	(13)	(13)	(13) (31)		(13) (16)	(13) (16)
28		F	(13)	(13)	(13) (31)		(13) (16)	(13) (16)
29	KOREAN FLOW-THROUGH (30)	S	(13)	(13)	(13) (31)		(13) (16)	(13) (16)
30		F/R	(13)	(13)	(13) (31)		(13) (16)	(13) (16)
31	FIRST GENERATION MAINTENANCE HAS (30) (29)	S/R	K8	K8	K8		K8	K8
32		F	K18	K18	K18		K18	K18
33	SECOND OR THIRD GENERATION MAINTENANCE HAS (30) (29)		K8	K8	K8		K8	K8
34	NON-EXPLOSIVES AIRCRAFT PARKING AREA (17)	NON-DoD	IBD (19)	IBD (19)	IBD (19)		IBD (19)	IBD (19)
35		DoD (18)	(13)	(13)	(13) (20)		(13) (20)	(13) (20)
36	MILITARY USE ONLY	RUNWAY	PTRD (19) (21)	PTRD (19) (21)	NO QD SEPARATION REQUIRED		NO QD SEPARATION REQUIRED	NO QD SEPARATION REQUIRED
37		TAXIWAY	PTRD (19) (21)	PTRD (19) (21)				
38	JOINT MILITARY/ NON-MILITARY USE	RUNWAY	IBD (19)	IBD (19)	IBD (19)	IBD (19)	IBD (19)	IBD (19)
39		TAXIWAY	PTRD (19)	PTRD (19)	PTRD (19)	PTRD (19)	PTRD (19)	PTRD (19)
40	A/C PASSENGER LOAD/UNLOAD AREA	OPEN (22)	PTRD (19)	PTRD (19)	PTRD (19)	PTRD (19)	PTRD (19)	PTRD (19)
41		STRUCTURE (23)	IBD (19)	IBD (19)	IBD (19)	IBD (19)	IBD (19)	IBD (19)
42	COMBAT AIRCRAFT RELATED FACILITIES		ILD (36) (37)	ILD (36) (37)	ILD (36)(37)	ILD (36)(37)	ILD (36) (37)	ILD (36)(37)
43	EXPLOSIVES CARGO AIRCRAFT RELATED FACILITIES		ILD (36) (38)	ILD (36) (38)	ILD (36) (38)	ILD (36) (38)	ILD (36)(38)	ILD (36) (38)
44	MUNITIONS STORAGE AREA RELATED FACILITIES		ILD (36)(39)	ILD (36)(39)	ILD (36) (39)	ILD (36) (39)	ILD (36)(38)	ILD (36) (39)
45	RELATED FACILITY		ILD (36)(39)	ILD (36)(39)	ILD (36)(37)	ILD (36)(37)	ILD (36)(38)	ILD (36)
46	PUBLIC TRAFFIC ROUTE		PTRD (35)	PTRD (35)	PTRD (35)	PTRD (35)	PTRD (35)	PTRD (35)
47	INHABITED BUILDING		IBD (35)	IBD (35)	IBD (35)	IBD (35)	IBD (35)	IBD (35)

Table V3.E3.T17. (Added)(AF) HD 1.1 QD Criteria, Continued. Notes (12) (24)

	COLUMN		15	16
LINE	TO: EXPOSED SITE (ES)	FROM: POTENTIAL EXPLOSION SITE (PES)	HARDENED AIRCRAFT SHELTER (1st Generation & Korean TAB VEE) (29) (30)	HARDENED AIRCRAFT SHELTER (2nd / 3rd GENERATION & Korean flow-through) (29) (30)
1	EARTH-COVERED MAGAZINE (7-BAR) (4)	S	USE ABOVE GROUND MAGAZINE COLUMNS	USE ABOVE GROUND MAGAZINE COLUMNS
2		R		
3		FU		
4		FB (3)		
5	EARTH-COVERED MAGAZINE (3-BAR) (4)	S		
6		R		
7		FU		
8		FB (3)		
9	EARTH-COVERED MAGAZINE (UNDEFINED) (4)	S		
10		R		
11		FU		
12		FB (3)		
13	ABOVE GROUND MAGAZINE (6)	U		
14		B (3)		
15	BARRICADED MODULES	U		
16		B (5)		
17	OPERATING LOCATION	U	ILD (10) (32)	ILD (10) (33)
18		B (3)	ILD (11) (32)	ILD (11) (33)
19	COMBAT AIRCRAFT PARKING AREA	SINGLE A/C	(13) (16)	(13) (16)
20		A/C GROUP		
21	EXPLOSIVES CARGO AIRCRAFT PARKING AREA		USE ABOVE GROUND MAGAZINE COLUMNS	USE ABOVE GROUND MAGAZINE COLUMNS
22	FLIGHTLINE MUNITIONS HOLDING AREA			
23	FIRST GENERATION HARDENED AIRCRAFT SHELTER (30) (29)	S/R	(34)	(34)
24		F		
25	SECOND OR THIRD GENERATION HARDENED AIRCRAFT SHELTER (30) (29)			
26	KOREAN TAB VEE (30) (29)	S		
27		R		
28		F		
29	KOREAN FLOW-THROUGH (30)	S		
30		F/R		
31	FIRST GENERATION MAINTENANCE HAS (30) (29)	S/R		
32		F		
33	SECOND OR THIRD GENERATION MAINTENANCE HAS (30) (29)			
34	NON-EXPLOSIVES AIRCRAFT PARKING AREA (17)	NON-DoD	IBD (32)	IBD (33)
35		DoD (18)	(13) (20)	(13) (20)
36	MILITARY USE ONLY	RUNWAY	NO QD SEPARATION REQUIRED	NO QD SEPARATION REQUIRED
37		TAXIWAY		
38	JOINT MILITARY/ NON-MILITARY USE	RUNWAY	IBD (32)	IBD (33)
39		TAXIWAY	PTRD (32)	PTRD (33)
40	A/C PASSENGER LOAD/UNLOAD AREA	OPEN (22)	PTRD (32)	PTRD (33)
41		STRUCTURE (23)	IBD (32)	IBD (33)
42	COMBAT AIRCRAFT RELATED FACILITIES		ILD (10) (32) (37)	ILD (10) (33) (37)
43	EXPLOSIVES CARGO AIRCRAFT RELATED FACILITIES		ILD (32) (38)	ILD (33) (38)
44	MUNITIONS STORAGE AREA RELATED FACILITIES		ILD (32) (39)	ILD (33) (39)
45	RELATED FACILITY		ILD (10) (32)	ILD (10) (33)
46	PUBLIC TRAFFIC ROUTE		PTRD (32)	PTRD (33)
47	INHABITED BUILDING		IBD (32)	IBD (33)

Table V3.E3.T17. (Added)(AF) HD 1.1 QD Criteria, Continued. Notes (12) (24)

Notes: **(Added)(AF)**

1. **(Added)(AF)** Use this K-factor for NEWQD in PES up to 250,000 lbs.
2. **(Added)(AF)** Use this K-factor for NEWQD in PES greater than 250,000 lbs.
3. **(Added)(AF)** These barricades serve to mitigate both fragment and overpressure hazards. See section **V2.E5.4.** for their requirements.
4. **(Added)(AF)** ECMs must meet the design requirements in section **V2.E5.5.** Paragraph **V3.E3.1.3.1.** defines sectors (front, side, or rear) of ECMs. Consider the front sector of an ECM unbarricaded unless barricaded per section **V2.E5.4.** to mitigate fragment hazards.
5. **(Added)(AF)** These barricades serve to mitigate fragment hazards. See section **V2.E5.6.** for their requirements.
6. **(Added)(AF)** AGMs are all types of above grade (non-earth-covered) magazines or storage pads. This includes open-air munitions stocks, light structures (e.g., Butler buildings), and trucks, trailers, or railcars loaded with explosives.
7. **(Added)(AF)** Although Barricaded Modules are considered AGMs, reduced QD (K1.1) may be applied between modules provided the requirements of section **V2.E5.6.** are met (to include limitations on the type of AE being stored in them, and prohibition on the use of heavy structures). If the requirements of section **V2.E5.6.** are not met, use AGM criteria.
8. **(Added)(AF)** See paragraph **V3.E3.1.4.1.**
9. **(Added)(AF)** See paragraph **V3.E3.1.4.2.**
10. **(Added)(AF)** See paragraph **V3.E3.1.4.2.1.**
11. **(Added)(AF)** See paragraph **V3.E3.1.4.2.2.**
12. **(Added)(AF)** See **Volume 3 – Enclosure 3** QD Criteria for Accidental Detonations and **Volume 4** QD Criteria for Airfields and Heliports, Piers and Wharfs, and Specific Facilities.
13. **(Added)(AF)** Use Table **V4.E3.T2.** (K30 with a 111 foot minimum) to provide aircraft survivability from blast overpressure. Additionally, barricades are required if protection from low-angle, high-speed fragments is desired; side or rear of an ECM suffice as barricades for this purpose.
14. **(Added)(AF)** Minimum required distance is K11 or K6 if a barricade meeting the requirements of section **V2.E5.4.** is between the PES and ES. Combat aircraft may be separated at less than IMD provided: a) Their NEWQDs are combined to determine required QD to other exposures and b) Approval is obtained from at least the vice commander of the MAJCOM or NAF having operational control of the exposed aircraft (except for revetted cells containing two aircraft). If separation at less than IMD is required for support of a Unified Combatant Commander, the vice commander of the MAJCOM or NAF having operational control of the aircraft will be the lowest approval level.
15. **(Added)(AF)** For QD purposes, an aircraft group is defined as two or more aircraft loaded with combat configured explosives that are parked at less than IMD. Although they do not reduce the required separation, intervening barricades are recommended. With NAF or MAJCOM approval, IMD may be used between groups for contingency operations, per **Volume 6 – Enclosure 3**.
16. **(Added)(AF)** This distance may be reduced to K11, or K6, if a barricade meeting the requirements of section **V2.E5.4.** is between the PES and ES. See Note 13 if survivability is desired.
17. **(Added)(AF)** Consider parked aero club aircraft as non-DoD aircraft for QD purposes; the presence of aero club aircraft does not make an airfield joint use.

Table V3.E3.T17. (Added)(AF) HD 1.1 QD Criteria, Continued. Notes (12) (24)

18. **(Added)(AF)** MAJCOMs may require greater separation for unique mission or high value aircraft.
19. **(Added)(AF)** See paragraph **V3.E3.1.3.** for IBD and PTRD separation criteria.
20. **(Added)(AF)** These distances may be reduced with MAJCOM approval.
21. **(Added)(AF)** When required at locations outside the U.S. use K4.5. The use of this reduced separation depends on operational necessity, providing the commander accepts the transient risk to military aircraft movements. Include the written risk acceptance as part of the ESP submission.
22. **(Added)(AF)** Use this row for locations in the open where passengers board and deplane.
23. **(Added)(AF)** Use this row if a structure is included where passengers assemble, such as a passenger terminal building.
24. **(Added)(AF)** Use this table for siting HD 1.5 (see paragraph **V1.E7.2.2.5.**).
25. **(Added)(AF)** This distance provides aircraft survivability from blast overpressure. For IMD protection, this distance may be reduced to K9 or K6 if a barricade meeting the requirements of section **V2.E5.4.** is between the PES and ES.
26. **(Added)(AF)** This distance provides aircraft survivability from blast overpressure. For IMD protection, this distance may be reduced to K2.75.
27. **(Added)(AF)** This distance provides aircraft survivability from blast overpressure. For IMD protection, this distance may be reduced to K2.75.
28. **(Added)(AF)** This distance provides aircraft survivability from blast overpressure. For IMD protection, this distance may be reduced from K9, or K6 if a barricade meeting the requirements of section **V2.E5.4.** is between the PES and ES.
29. **(Added)(AF)** Base separations on shelter doors remaining closed, except for aircraft towing, fueling, servicing, run up, or taxi, and during integrated combat turnarounds (ICT) or short periods when maintenance equipment or munitions are being moved into or out of shelters. If doors are left open for extended periods, normal CAPA apply to and from the front. As a PES, parenthetical (xx) fragment distances do not apply except out the front of a Korean TAB VEE HAS and out the front and rear of a Korean flow-through HAS.
30. **(Added)(AF)** HASs must meet the category requirements in paragraph **V4.E3.7.1.1.** Sectors (front, side, or rear) of HASs are defined in paragraph **V3.E3.1.3.1.** Consider the front sector of an HAS unbarricaded unless barricaded per section **V2.E5.4.** to mitigate fragment hazards. (See section **V4.E3.7.**)
31. **(Added)(AF)** This distance provides aircraft survivability. For IMD protection, this distance may be reduced to K11 or K6 if a barricade meeting the requirements of section **V2.E5.4.** is between the PES and ES.
32. **(Added)(AF)** Use Table **V4.E3.T8.**
33. **(Added)(AF)** Use Table **V4.E3.T7.**
34. **(Added)(AF)** Use Table **V4.E3.T3.** or **V4.E3.T4.** (IMD equivalent separation) for separation between HASs and between HASs and HAS Ready Service ECMs or AGMs. Use Table **V4.E3.T5.** or **V4.E3.T6.** (aircraft survivability) if survivability is desired.
35. **(Added)(AF)** See paragraph **V3.E3.1.3.**
36. **(Added)(AF)** See paragraphs **V3.E3.1.2.1.1.3.5.** and **V3.E3.1.4.**
37. **(Added)(AF)** See paragraph **V3.E3.1.1.2.1.11.**
38. **(Added)(AF)** See paragraph **V4.E3.1.4.**
39. **(Added)(AF)** See paragraph **V4.E3.1.5.**

Table V3.E3.T18. (Added)(AF) HD 1.2.1, 1.2.2, and 1.2.3 QD Criteria. Notes: (1) (2) (3)

LINE	COLUMN		1	2	3	4	5	6	7	8	9
	TO: EXPOSED SITE (ES)	FROM: POTENTIAL EXPLOSION SITE (PES)	EARTH-COVERED MAGAZINE (4) (28)		ABOVE GROUND MAGAZINE (6)			BARRICADED MODULES	OPERATING LOCATION		
			S or R	F	(H)	(H/R)	(L)	(L)	(H)	(H/R)	(L)
1	EARTH-COVERED MAGAZINE (7-BAR/3-BAR) (4)	S	0 (40)	0 (40)	0 (40)	0 (40)	0 (40)	0 (40)	0 (40)	0 (40)	0 (40)
2		R	0 (40)	0 (40)	0 (40)	0 (40)	0 (40)	0 (40)	0 (40)	0 (40)	0 (40)
3		FU	0 (40)	0 (40)	0 (40)	0 (40)	0 (40)	0 (40)	0 (40)	0 (40)	0 (40)
4		FB (5)	0 (40)	0 (40)	0 (40)	0 (40)	0 (40)	0 (40)	0 (40)	0 (40)	0 (40)
5	EARTH-COVERED MAGAZINE (UNDEFINED) (4)	S	0 (40)	0 (40)	0 (40)	0 (40)	0 (40)	0 (40)	0 (40)	0 (40)	0 (40)
6		R	0 (40)	0 (40)	0 (40)	0 (40)	0 (40)	0 (40)	0 (40)	0 (40)	0 (40)
7		FU	0 (40)	(7)	(7)	(7)	(7)	(7)	(7)	(7)	(7)
8		FB (5)	0 (40)	0 (40)	0 (40)	0 (40)	0 (40)	0 (40)	0 (40)	0 (40)	0 (40)
9	ABOVE GROUND MAGAZINE	(H/R)	0 (40)	0 (40)	0 (40)	0 (40)	0 (40)	0 (40)	0 (40)	0 (40)	0 (40)
10		(H or L)	0 (40)	(7)	(7)	(7)	(7)	(7)	(7)	(7)	(7)
11	BARRICADED MODULES	(L)	0 (40)	(7)	(7)	(7)	(7)	(8)	(7)	(7)	(7)
12	OPERATING LOCATION	(H/R)	0 (40)	(9)	(9)	(9)	(9)	(9)	(9)	(9)	(9)
13		(H or L)	0 (40)	(9)	(9)	(9)	(9)	(9)	(9)	(9)	(9)
14	COMBAT AIRCRAFT PARKING AREA		(10)	(11)	(11)	(11)	(11)	(11)	(11)	(11)	(11)
15	EXPLOSIVES CARGO AIRCRAFT PARKING AREA		(12)	(13)	(13)	(13)	(13)	(13)	(13)	(13)	(13)
16	FLIGHTLINE MUNITIONS HOLDING AREA		(14)	(14)	(14)	(14)	(14)	(14)	(14)	(14)	(14)
17	HARDENED AIRCRAFT SHELTER (30)		(10)	(11)	(11)	(11)	(11)	(11)	(11)	(11)	(11)
18	MAINTENANCE HAS (30) (36)		(10)	(11)	(11)	(11)	(11)	(11)	(11)	(11)	(11)
19	NON-EXPLOSIVES AIRCRAFT PARKING AREA (17)	NON-DoD	(15)	(16)	(16)	(16)	(16)	(16)	(16)	(16)	(16)
20		DoD (18)	(10)	(11)	(11)	(11)	(11)	(11)	(11)	(11)	(11)
21	MILITARY USE ONLY	RUNWAY	(19) (21)	(20) (21)	(20) (21)	(20) (21)	(20) (21)	(20) (21)	(20) (21)	(20) (21)	(20) (21)
22		TAXIWAY	(26)	(20) (21)	(20) (21)	(20) (21)	(20) (21)	(20) (21)	(20) (21)	(20) (21)	(20) (21)
23	JOINT MILITARY/ NON-MILITARY USE	RUNWAY	(15)	(16)	(16)	(16)	(16)	(16)	(16)	(16)	(16)
24		TAXIWAY	(19)	(20)	(20)	(20)	(20)	(20)	(20)	(20)	(20)
25	A/C PASSENGER LOAD/UNLOAD AREA	OPEN (22)	(19)	(20)	(20)	(20)	(20)	(20)	(20)	(20)	(20)
26		STRUCTURE (23)	(15)	(16)	(16)	(16)	(16)	(16)	(16)	(16)	(16)
27	COMBAT AIRCRAFT RELATED FACILITIES		(24) (37)	(24) (37)	(24) (37)	(24) (37)	(24) (37)	(24) (37)	(24) (37)	(24) (37)	(24) (37)
28	EXPLOSIVES CARGO AIRCRAFT RELATED FACILITIES		(24) (38)	(24) (38)	(24) (38)	(24) (38)	(24) (38)	(24) (38)	(24) (38)	(24) (38)	(24) (38)
29	MUNITIONS STORAGE AREA RELATED FACILITIES		(24) (39)	(24) (39)	(24) (39)	(24) (39)	(24) (39)	(24) (39)	(24) (39)	(24) (39)	(24) (39)
30	RELATED FACILITY		(24) (37) (38) (39)	(24) (37) (38) (39)	(24) (37) (38) (39)	(24) (37) (38) (39)	(24) (37) (38) (39)	(24) (37) (38) (39)	(24) (37) (38) (39)	(24) (37) (38) (39)	(24) (37) (38) (39)
31	PUBLIC TRAFFIC ROUTE		(19)	(20)	(20)	(20)	(20)	(20)	(20)	(20)	(20)
32	INHABITED BUILDING		(15)	(16)	(16)	(16)	(16)	(16)	(16)	(16)	(16)

Table V3.E3.T18. (Added)(AF) HD 1.2.1, 1.2.2, and 1.2.3 QD Criteria. Notes: (1) (2) (3), Continued.

	COLUMN		10	11	12	13
LINE	TO: EXPOSED SITE (ES)	FROM: POTENTIAL EXPLOSION SITE (PES)	COMBAT AIRCRAFT PARKING AREA	EXPLOSIVES CARGO AIRCRAFT PARKING AREA	FLIGHTLINE MUNITIONS HOLDING AREA	HARDENED AIRCRAFT SHELTER (29) (30) (31)
1	EARTH-COVERED MAGAZINE (7-BAR/3-BAR) (4)	S	USE ABOVE GROUND MAGAZINE (L) COLUMN	USE ABOVE GROUND MAGAZINE (L) COLUMN	USE ABOVE GROUND MAGAZINE (L) COLUMN	(32)
2		R				
3		FU				
4		FB (5)				
5	EARTH-COVERED MAGAZINE (UNDEFINED) (4)	S				
6		R				
7		FU				
8		FB (5)				
9	ABOVE GROUND MAGAZINE	(H/R)				
10		(H or L)				
11	BARRICADED MODULES	(L)				
12	OPERATING LOCATION	(H/R)				
13		(H or L)				
14	COMBAT AIRCRAFT PARKING AREA		(25)	(25)	(25)	(25)
15	EXPLOSIVES CARGO AIRCRAFT PARKING AREA		(25)	(25)	(25)	(25)
16	FLIGHTLINE MUNITIONS HOLDING AREA		(25)	(25)	(25)	(25)
17	HARDENED AIRCRAFT SHELTER (30)		(25)	(25)	(25)	(25)
18	MAINTENANCE HAS (30) (36)		(33) (34)	(33) (34)	(33) (34)	(32) (34) (35)
19	NON-EXPLOSIVES AIRCRAFT PARKING AREA (17)	NON-DoD	(16)	(16)	(16)	(16) (32)
20		DoD (18)	(27)	(27)	(27)	(27)
21	MILITARY USE ONLY	RUNWAY	NO QD SEPARATION REQUIRED	NO QD SEPARATION REQUIRED	NO QD SEPARATION REQUIRED	NO QD SEPARATION REQUIRED
22		TAXIWAY				
23	JOINT MILITARY/ NON-MILITARY USE	RUNWAY	(16)	(16)	(16)	(16) (32)
24		TAXIWAY	(20)	(20)	(20)	(20) (32)
25	A/C PASSENGER LOAD/UNLOAD AREA	OPEN (22)	(20)	(20)	(20)	(20) (32)
26		STRUCTURE (23)	(16)	(16)	(16)	(16) (32)
27	COMBAT AIRCRAFT RELATED FACILITIES		(24) (37)	(24) (37)	(24) (37)	(32)
28	EXPLOSIVES CARGO AIRCRAFT RELATED FACILITIES		(24) (38)	(24) (38)	(24) (38)	(32)
29	MUNITIONS STORAGE AREA RELATED FACILITIES		(24) (39)	(24) (39)	(24) (39)	(32)
30	RELATED FACILITY		(24) (37) (38) (39)	(24) (37) (38) (39)	(24) (37) (38) (39)	(32)
31	PUBLIC TRAFFIC ROUTE		(20)	(20)	(20)	(20) (32)
32	INHABITED BUILDING		(16)	(16)	(16)	(16) (32)

Table V3.E3.T18. (Added)(AF) HD 1.2.1, 1.2.2, and 1.2.3 QD Criteria. Notes: (1) (2) (3), Continued.

Legend **(Added)(AF)**:
(H)—Heavy Wall **(Added)(AF)**: Barricade buildings with wall thickness ≥ 12 inches of reinforced concrete; such as an ES door to mitigate fragment hazards per **Volume 2 – Enclosure 5** if it faces a PES.
(H/R)—Heavy Wall and Roof **(Added)(AF)**: Barricade buildings with wall thickness ≥ 12 inches of reinforced concrete and a roof thickness > 5.9 inches of reinforced concrete; such as an ES door to mitigate fragment hazards per **Volume 2 – Enclosure 5** if it faces a PES; side or /rear exposures may or may not be barricaded.
(L)—Light Wall **(Added)(AF)**: Light structure, open stack, truck, trailer, railcar, and cargo aircraft.
Notes **(Added)(AF)**:
1. **(Added)(AF)** See paragraph **V3.E3.1.1.6.** - Allowable Exposures for additional exposures and **Volume 4** QD Criteria for Airfields and Heliports, Piers and Wharfs, and Specific Facilities.
2. **(Added)(AF)** When the NEWQD and the MCE of the packaged HD 1.2.1 items fall within the ranges specified in equation (NEWQD < MCE < 450 lbs), the HD 1.2.1 will be treated as HD 1.1 and the criteria of paragraph **V3.E3.1.2.1.1.1.1.**, as applicable, will be used (see paragraph **V3.E3.2.2.**).
3. **(Added)(AF)** When siting HD 1.2.3, cap the MCE at < 450 pounds, and cap the (xx) at 1,300 feet. These caps are for simplicity in siting and may be exceeded with AFSEC/SEW approval.
4. **(Added)(AF)** ECMs must meet the design requirements in section **V2.E5.5.** Sectors (front, side, or rear) of ECMs are defined in paragraph **V3.E3.1.3.1.** The front sector of an ECM is considered unbarricaded unless barricaded per section **V2.E5.4.** to mitigate fragment hazards.
5. **(Added)(AF)** These barricades serve to mitigate fragment hazards. See section **V2.E5.4.** for their requirements.
6. **(Added)(AF)** AGMs are all types of above grade (non earth-covered) magazines or storage pads. This includes open-air munitions stocks, light structures (e.g., Butler buildings), and trucks, trailers, or railcars loaded with explosives.
7. **(Added)(AF)** Required IMD separation is as follows: HD 1.2.1 MCE < 100 lbs: 200 feet; HD 1.2.1 MCE > 100 lbs: 300 feet; HD 1.2.2: 100 feet; HD 1.2.3 to an ES containing only HD 1.2.3: 50 feet; HD 1.2.3 to an ES containing other than HD 1.2.3: K11 based on the NEWQD of the single round of the largest (greatest NEWQD) HD 1.2.3 item in the PES.
8. **(Added)(AF)** Although Barricaded Modules are considered AGMs, reduced QD may be applied between modules, provided the requirements of section **V2.E5.6.** are met (to include limitations on the type of AE being stored in them, and prohibition on the use of heavy structures). If the requirements of section **V2.E5.6.** are not met, use AGM criteria. Base IM distance for HD 1.2.x. for module to module separation on total NEWQD. Do not use MCE to calculate IM distance between modules.
9. **(Added)(AF)** Required ILD separation is as follows:
HD 1.2.1, 1.2.2 and 1.2.3: 36 percent of the IBD, with a minimum distance equal to the IMD treating the ES as an AGM.
10. **(Added)(AF)** Apply PTRD separation per Note 19 for aircraft survivability.
11. **(Added)(AF)** Apply PTRD separation per Note 20 for aircraft survivability.
12. **(Added)(AF)** Apply IMD separation treating the ES as an AGM. If aircraft survivability is desired, apply PTRD separation per Note 19.

Table V3.E3.T18. (Added)(AF) HD 1.2.1, 1.2.2, and 1.2.3 QD Criteria. Notes: (1) (2) (3), Continued.

13. **(Added)(AF)** Apply IMD separation treating the ES as an AGM. If aircraft survivability is desired, apply PTRD separation per Note 20.
14. **(Added)(AF)** Apply IMD separation treating the ES as an AGM.
15. (Added)(AF) Required IBD separation is as follows: HD 1.2.1 MCE < 100 lbs: 200 feet; HD 1.2.1 MCE > 100 lbs: 300 feet; HD 1.2.2: 100 feet; HD 1.2.3: IBD per paragraph **V3.E3.2.13.**
16. **(Added)(AF)** Required IBD separation is as follows:
HD 1.2.1 in a structure, truck, trailer, railcar, or cargo aircraft: IBD is the larger of the IBD from Table **V3.E3.T10.** or the HDD from Table **V3.E3.T11.**
HD 1.2.1 in the open, external aircraft, AE, or stacks on open trucks, trailers, or railcar: IBD is the IBD from Table **V3.E3.T10.**
HD 1.2.2: IBD is the IBD from Table **V3.E3.T12.**
HD 1.2.3: IBD per paragraph **V3.E3.2.13.**
17. **(Added)(AF)** Consider parked aero club aircraft as non-DoD aircraft for QD purposes; the presence of aero club aircraft does not make an airfield joint use.
18. **(Added)(AF)** MAJCOMs may require greater separation for unique mission or high value aircraft.
19. **(Added)(AF)** Required PTRD separation is as follows: HD 1.2.1 MCE < 100 lbs: 200 feet; HD 1.2.1 MCE > 100 lbs: 300 feet; HD 1.2.2: 100 feet; HD 1.2.3: 60 percent of the IBD, with a minimum distance equal to the IMD treating the ES as an AGM (H or L).
20. **(Added)(AF)** Required PTRD separation is as follows: HD 1.2.1, 1.2.2 and 1.2.3: 60 percent of the IBD, with a minimum distance equal to the IMD treating the ES as an AGM (H or L).
21. **(Added)(AF)** When required at overseas locations only, use 125 feet. The use of this reduced separation depends on operational necessity, providing the commander accepts the transient risk to military aircraft movements. Include the written risk acceptance as part of the ESP submission.
22. **(Added)(AF)** Use this row for locations in the open where passengers board and deplane.
23. **(Added)(AF)** Use this row if a structure is included where passengers assemble, such as a passenger terminal building.
24. **(Added)(AF)** Treat as an Operating Location to determine required ILD separation.
25. **(Added)(AF)** No QD separation is required, unless aircraft survivability is desired; use PTRD separation per Note 20 for aircraft survivability.
26. **(Added)(AF)** No QD separation is required.
27. **(Added)(AF)** MAJCOMs will determine required QD separation.
28. **(Added)(AF)** ECMs may be used to their physical capacity for HD 1.2 provided they meet separation requirements for a minimum of 100 lbs of HD 1.1, and provided separations to other exposures comply with applicable QD criteria.
29. **(Added)(AF)** Base separations on shelter doors remaining closed, except for aircraft towing, fueling, servicing, run up, or taxi, and during ICT or short periods when maintenance equipment or munitions are being moved into or out of shelters. If doors are left open for extended periods, normal CAPA apply from the front.

Table V3.E3.T18. (Added)(AF) HD 1.2.1, 1.2.2, and 1.2.3 QD Criteria. Notes: (1) (2) (3), Continued.

30. **(Added)(AF)** HASs must meet the category requirements in paragraph **V4.E3.7.1.** Sectors (front, side, or rear) of HASs are defined in paragraph **V3.E3.1.3.1.** Consider the front sector of a HAS unbarricaded unless barricaded per section **V2.E5.4.** to mitigate fragment hazards (see section **V4.E3.7.**).
31. **(Added)(AF)** First, Second, and Third Generation HASs, and Korean TAB VEE HASs, sited for HD 1.2.1 MCE < 110 lbs, HD 1.2.2, or HD 1.2.3 MCE < 110 lbs do not generate a QD clear zone except out the front. Korean flow-through HASs sited for HD 1.2.1 MCE < 110 lbs, HD 1.2.2, or HD 1.2.3 MCE < 110 lbs do not generate a QD clear zone except out the front and rear. Fire protection distances still apply.
32. **(Added)(AF)** Treat First, Second, and Third Generation HAS as AGM (H/R), Korean TAB VEE side or rear as an AGM (H/R) and front as an AGM (H or L), Korean flow-through side as an AGM (H/R) and front or rear as an AGM (H or L).
33. **(Added)(AF)** Required ILD separation is as follows: HD 1.2.1, 1.2.2 and 1.2.3: 36 percent of the IBD, with a minimum distance equal to the IMD treating First, Second, and Third Generation as an AGM (H/R), Korean TAB VEE side or rear as an AGM (H/R) and front as an AGM (H or L), Korean flow-through side as an AGM (H/R) and front or rear as an AGM (H or L).
34. **(Added)(AF)** If aircraft survivability is desired, apply PTRD separation per Note 20.
35. **(Added)(AF)** Treat the PES as an AGM: for a front exposure from a First, Second, or Third Generation HAS, use (H/R) criteria; for a front exposure from a Korean TAB VEE or Korean flow-through HAS, use (L) criteria. Treat the ES as an Operating Location: to a First, Second, and Third Generation use (H/R) criteria; to the side or rear of a Korean TAB VEE use (H/R) criteria and to the front use (H or L) criteria; to the side of a Korean flow-through use (H/R) criteria and to the front or rear use (H or L) criteria.
36. **(Added)(AF)** Base separations on shelter doors remaining closed, except for aircraft towing, fueling, servicing, run up, or taxi, and during ICT or short periods when maintenance equipment or munitions are being moved into or out of shelters. If doors are left open for extended periods, treat the front exposure as an Operating Location (H or L).
37. **(Added)(AF)** See paragraph **V3.E3.1.1.2.1.11.**
38. **(Added)(AF)** See paragraph **V4.E3.1.4.**
39. **(Added)(AF)** See paragraph **V4.E3.1.5.**
40. **(Added)(AF)** Practical considerations such as firefighting and security dictate specific separation distance requirements.

Table V3.E3.T19. (Added)(AF) HD 1.3, 1.4 and 1.6 QD Criteria. Notes: (1) (10) (11)

	COLUMN		1	2	3	4
LINE	TO: EXPOSED SITE (ES) / FROM: POTENTIAL EXPLOSION SITE (PES)		EARTH-COVERED MAGAZINE (2) (9)	ABOVE GROUND MAGAZINE (3)	BARRICADED MODULES (4)	OPERATING LOCATION
1	EARTH-COVERED MAGAZINE (2)		IMD (12)	IMD (12)	IMD (12)	IMD (12)
2	ABOVE-GROUND MAGAZINE (3)		IMD (12)	IMD (13)	IMD (13)	IMD (13)
3	BARRICADED MODULES		IMD (12)	IMD (13)	IMD (13) (4)	IMD (13)
4	OPERATING LOCATION		ILD (14)	ILD (14)	ILD (14)	ILD (14)
5	COMBAT AIRCRAFT PARKING AREA		PTRD (15)	PTRD (15)	PTRD (15)	PTRD (15)
6	EXPLOSIVES CARGO AIRCRAFT PARKING AREA		IMD (12) (16)	IMD (13) (16)	IMD (13) (16)	IMD (13) (16)
7	FLIGHTLINE MUNITIONS HOLDING AREA		IMD (12)	IMD (13)	IMD (13)	IMD (13)
8	HARDENED AIRCRAFT SHELTER (23)		PTRD (15)	PTRD (15)	PTRD (15)	PTRD (15)
9	MAINTENANCE HAS (23)		PTRD (15)	PTRD (15)	PTRD (15)	PTRD (15)
10	NON-EXPLOSIVES AIRCRAFT PARKING AREA (5)	NON-DoD	IBD (15)	IBD (15)	IBD (15)	IBD (15)
11		DoD (6)	PTRD (15)	PTRD (15)	PTRD (15)	PTRD (15)
12	MILITARY USE ONLY	RUNWAY	PTRD (15) (17)	PTRD (15) (17)	PTRD (15)	PTRD (15)(17)
13		TAXIWAY	PTRD (15) (17) (27)	PTRD (15) (17)	PTRD (15)	PTRD (15) (17)
14	JOINT MILITARY/NON-MILITARY USE	RUNWAY	IBD (15)	IBD (15)	IBD (15)	IBD (15)
15		TAXIWAY	PTRD (15)	PTRD (15)	PTRD (15)	PTRD (15)
16	A/C PASSENGER LOAD/UNLOAD AREA	OPEN (7)	PTRD (15)	PTRD (15)	PTRD (15)	PTRD (15)
17		STRUCTURE (8)	IBD (15)	IBD (15)	IBD (15)	IBD (15)
18	COMBAT AIRCRAFT RELATED FACILITIES		ILD (24)	ILD (24)	ILD (24)	(24)
19	EXPLOSIVES CARGO AIRCRAFT RELATED FACILITIES		ILD (25)	ILD (25)	ILD (25)	(25)
20	MUNITIONS STORAGE AREA RELATED FACILITIES		ILD (26)	ILD (26)	ILD (26)	ILD (26)
21	RELATED FACILITY		ILD (14) (24) (25) (26)	ILD (14) (24) (25) (26)	ILD (14) (24) (25) (26)	ILD (14) (24) (25) (26)
22	PUBLIC TRAFFIC ROUTE		PTRD (15)	PTRD (15)	PTRD (15)	PTRD (15)
23	INHABITED BUILDING		IBD (15)	IBD (15)	IBD (15)	IBD (15)

Table V3.E3.T19. (Added)(AF) HD 1.3, 1.4 and 1.6 QD Criteria, Continued. Notes: (1) (10) (11)

	COLUMN		5	6	7	8
LINE	TO: EXPOSED SITE (ES)	FROM: POTENTIAL EXPLOSION SITE (PES)	COMBAT AIRCRAFT PARKING AREA	EXPLOSIVES CARGO AIRCRAFT PARKING AREA	FLIGHTLINE MUNITIONS HOLDING AREA	HARDENED AIRCRAFT SHELTER (22) (23)
1	EARTH-COVERED MAGAZINE (2)		IMD (12)	IMD (12)	IMD (12)	IMD (12)
2	ABOVE GROUND MAGAZINE (3)		IMD (13)	IMD (13)	IMD (13)	IMD (13)
3	BARRICADED MODULES		IMD (13)	IMD (13)	IMD (13)	IMD (13)
4	OPERATING LOCATION		ILD (14)	ILD (14)	ILD (14)	ILD (14)
5	COMBAT AIRCRAFT PARKING AREA		(18)	(18)	(18)	(18)
6	EXPLOSIVES CARGO AIRCRAFT PARKING AREA		(18)	(18)	(18)	(18)
7	FLIGHTLINE MUNITIONS HOLDING AREA		(13)	(13)	(13)	(13)
8	HARDENED AIRCRAFT SHELTER (23)		(18)	(18)	(18)	(18)
9	MAINTENANCE HAS (23)		ILD (14) (21)	ILD (14) (21)	ILD (14) (21)	ILD (14) (21)
10	NON-EXPLOSIVES AIRCRAFT PARKING AREA (5)	NON-DoD	IBD (15)	IBD (15)	IBD (15)	IBD (15)
11		DoD (6)	(20)	(20)	(20)	(20)
12	MILITARY USE ONLY	RUNWAY	(19)	(19)	(19)	(19)
13		TAXIWAY	(19)	(19)	(19)	(19)
14	JOINT MILITARY/NON-MILITARY USE	RUNWAY	IBD (15)	IBD (15)	IBD (15)	IBD (15)
15		TAXIWAY	PTRD (15)	PTRD (15)	PTRD (15)	PTRD (15)
16	A/C PASSENGER LOAD/UNLOAD AREA	OPEN (7)	PTRD (15)	PTRD (15)	PTRD (15)	PTRD (15)
17		STRUCTURE (8)	IBD (15)	IBD (15)	IBD (15)	IBD (15)
18	COMBAT AIRCRAFT RELATED FACILITIES		(24)	(24)	(24)	(24)
19	EXPLOSIVES CARGO AIRCRAFT RELATED FACILITIES		(25)	(25)	(25)	(25)
20	MUNITIONS STORAGE AREA RELATED FACILITIES		(26)	(26)	(26)	(26)
21	RELATED FACILITY		ILD (14) (24) (25) (26)	ILD (14) (24) (25) (26)	ILD (14) (24) (25) (26)	ILD (14) (24) (25) (26)
22	PUBLIC TRAFFIC ROUTE		PTRD (15)	PTRD (15)	PTRD (15)	PTRD (15)
23	INHABITED BUILDING		IBD (15)	IBD (15)	IBD (15)	IBD (15)

Table V3.E3.T19. (Added)(AF) HD 1.3, 1.4 and 1.6 QD Criteria, Continued. Notes: (1) (10) (11)

Notes **(Added)(AF)**:

1. **(Added)(AF)** See paragraph **V3.E3.1.1.6.** and **Volume 4** QD Criteria for Airfields and Heliports, Piers and Wharfs, and Specific Facilities.
2. **(Added)(AF)** ECMs must meet the design requirements in section **V2.E5.5.** Sectors (front, side, or rear) of ECMs are defined in paragraph **V3.E3.1.3.1**. The front sector of an ECM is considered unbarricaded unless barricaded per section **V2.E5.4.** to mitigate fragment hazards.
3. **(Added)(AF)** AGMs are all types of above grade (non earth-covered) magazines or storage pads. This includes open-air munitions stocks, light structures (e.g., Butler buildings), and trucks, trailers, or railcars loaded with explosives.
4. **(Added)(AF)** The requirements of paragraph **V2.E5.6.1.** are met (to include limitations on the type of AE stored in them and prohibition on the use of heavy structures). If the requirements of paragraph **V2.E5.6.1.** are not met, use AGM criteria. HD 1.3 is not allowed in modules.
5. **(Added)(AF)** Consider parked aero club aircraft as non-DoD aircraft for QD purposes; the presence of aero club aircraft does not make an airfield joint use.
6. **(Added)(AF)** MAJCOMs may require greater separation for unique mission or high value aircraft.
7. **(Added)(AF)** Use this row for locations in the open where passengers enplane and deplane.
8. **(Added)(AF)** Use this row if a structure is included where passengers assemble, such as a passenger terminal building.
9. **(Added)(AF)** ECMs may be used to their physical capacity for HD 1.3 and 1.4 provided they meet separation requirements for a minimum of 100 lbs of HD 1.1, and provided separations to other exposures comply with applicable QD criteria.
10. **(Added)(AF)** HD 1.4S may be stored (including associated handling) without regard to QD criteria (see paragraphs **V3.E3.4.3.** and **V1.E8.5.5.**).
11. **(Added)(AF)** Magazines storing only HD 1.4 may be located at IMD (per Table **V3.E3.T15.**) to all other explosives facilities (regardless of HD of NEWQD authorized in these facilities). Because the HD 1.4 may be destroyed as the result of a mishap involving the assets in these adjacent explosives facilities, the responsible commander must accept the potential loss of the HD 1.4 stocks and the storage structure. Document the commander's risk acceptance by letter (i.e., signed by the commander stating they understand and accepts the potential loss of the HD 1.4 stocks and the storage structure in the event of a mishap in an adjacent explosives facility) and submitted as part of the ESP. A new risk acceptance letter does not need to be generated when a new adjacent explosives facility is sited, as long as the original letter documented that other such structures might be added in future.
12. **(Added)(AF)** Required IMD separation is as follows: HD 1.3: See Table **V3.E3.T14.** IMD & ILD Column; HD 1.4: See Table **V3.E3.T15.** ECM IMD Column; HD 1.6: See Table **V3.E3.T16.** IMD & ILD Column.
13. **(Added)(AF)** Required IMD separation is as follows: HD 1.3: See Table **V3.E3.T14.** IMD & ILD Column; HD 1.4: See Table **V3.E3.T15.** Applicable AGS IMD Column; HD 1.6: See Table **V3.E3.T16.** IMD & ILD Column.
14. **(Added)(AF)** Required ILD separation is as follows: HD 1.3: See Table **V3.E3.T14.** IMD & ILD Column; HD 1.4: See Table **V3.E3.T15.** ILD Column; HD 1.6: See Table **V3.E3.T16.** IMD & ILD Column.

Table V3.E3.T19. (Added)(AF) HD 1.3, 1.4 and 1.6 QD Criteria, Continued. Notes: (1) (10) (11)

15. **(Added)(AF)** Required IBD or PTRD separation is as follows: HD 1.3: See Table **V3.E3.T14.** IBD & PTRD Column; HD 1.4: See Table **V3.E3.T15.** IBD & PTRD Column; HD 1.6: See Table **V3.E3.T16.** IBD & PTRD Column.
16. **(Added)(AF)** If required by the MAJCOM, for aircraft survivability, apply IBD or PTRD separation as follows: HD 1.3: See Table **V3.E3.T14.** IBD & PTRD Column; HD 1.4: See Table **V3.E3.T15.** IBD & PTRD Column; HD 1.6: See Table **V3.E3.T16.** IBD & PTRD Column.
17. **(Added)(AF)** When required at overseas locations only, use 125 feet for HD 1.3. The use of this reduced separation depends on operational necessity, providing the commander accepts the transient risk to military aircraft movements. Include the written risk acceptance as part of the ESP submission.
18. (Added)(AF) IMD per Note 13 as a minimum unless the MAJCOM requires aircraft survivability (apply IBD or PTRD per Note 16 for aircraft survivability). See paragraph **V4.E3.5.2.1.**
19. **(Added)(AF)** No QD separation is required.
20. **(Added)(AF)** MAJCOMs will determine required QD separation.
21. **(Added)(AF)** MAJCOM may require aircraft survivability (apply IBD or PTRD per Note 16 for aircraft survivability).
22. **(Added)(AF)** A HAS sited for HD 1.3 or 1.4 does not generate a QD clear zone except out the front.
23. **(Added)(AF)** HASs must meet the category requirements in paragraph **V4.E3.7.1.** Sectors (front, side, or rear) of HASs are defined in paragraph **V3.E3.1.3.1.** The front sector of a HAS is considered unbarricaded unless barricaded per section **V2.E5.4.** to mitigate fragment hazards (see section **V4.E3.7.**).
24. (Added)(AF) See paragraph **V3.E3.1.1.2.1.11.**
25. (Added)(AF) See paragraph **V4.E3.1.4.**
26. (Added)(AF) See paragraph **V4.E3.1.5.**
27. **(Added)(AF)** For HD 1.3 and HD 1.4, no separation is required from the side or rear of an ECM.

Appendix
Figures Cited in Enclosure 3

APPENDIX: FIGURES CITED IN ENCLOSURE 3

Figure V3.E3.F1. ECM Orientation Effects on IMD: Side-to-Side Orientationa

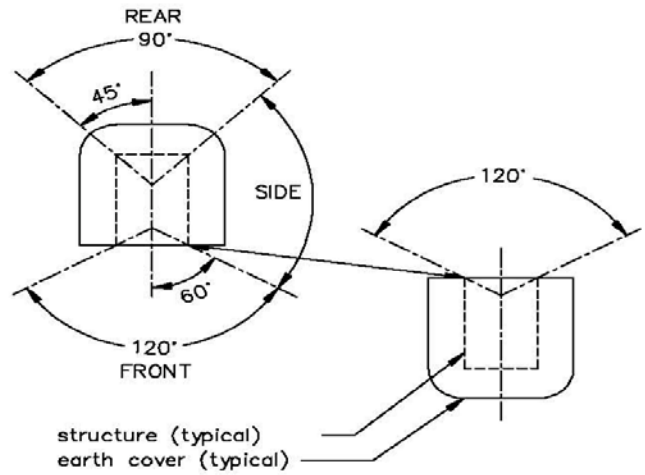

[a] See **paragraph** V3.E3.1.5.

Figure V3.E3.F2. HPM Orientation Effects[a, b, c]

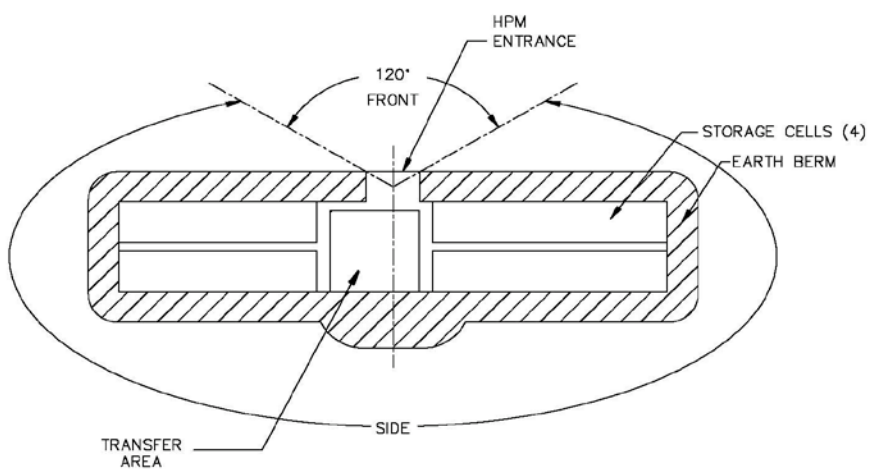

[a] As an ES, treat all exposures as sides.
[b] As a PES, the HPM has a front and all other exposures are considered sides.
[c] See paragraph **V3.E3.1.3.** for IBD/PTRD criteria, paragraph **V3.E3.1.4.** for ILD criteria, and paragraph **V3.E3.1.5.** for IMD criteria associated with an HPM.

Figure V3.E3.F3. ECM Orientation Effects on IMD: Side-to-Side Orientation[a]

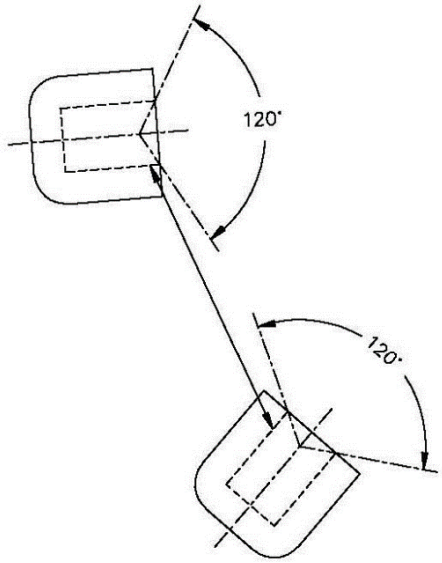

[a] See paragraph V3.E3.1.5.

Figure V3.E3.F4. ECM Orientation Effects on IMD[a, b, c]

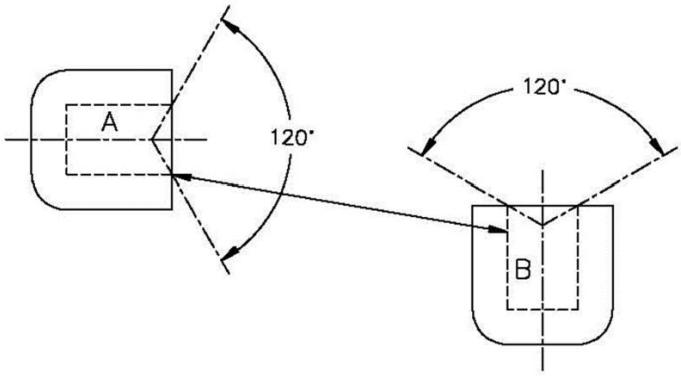

[a] See paragraph V3.E3.1.5.
[b] Site A as a side-to-front (unbarricaded) ES.
[c] Site B as a front (unbarricaded)-to-side ES.

Figure V3.E3.F5. ECM Orientation Effects on IMD[a, b]

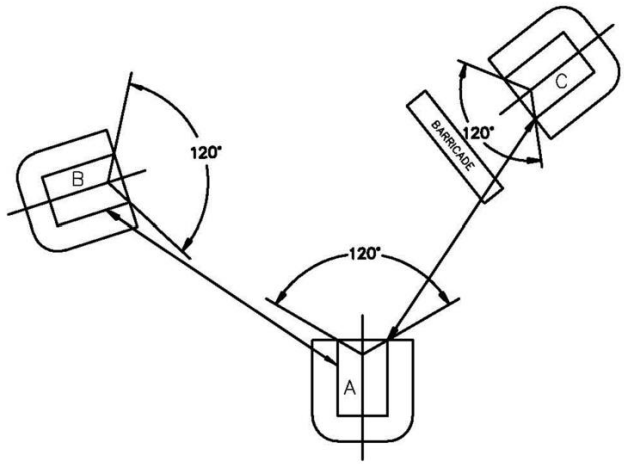

[a] See paragraph V3.E3.1.5.
[b] Site each magazine as a front-to-front ES: site C as a barricaded ES, and B as unbarricaded ESs.

Figure V3.E3.F6. ECM Orientation Effects on IMD: Canted ECMs[a, b, c]

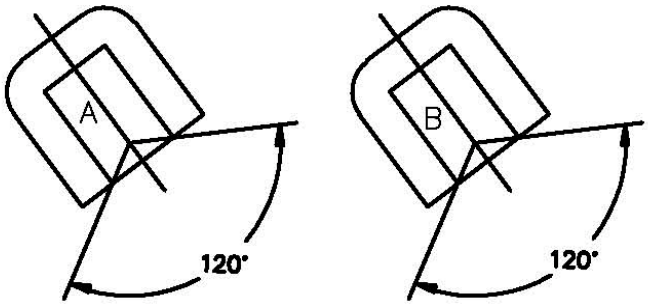

[a] See paragraph **V3.E3.1.5.**
[b] Site A as a side-to-front (unbarricaded) ES.
[c] Site B as a front (unbarricaded)-to-side ES.

Figure V3.E3.F7. ECM Orientation Effects on IMD: ECMs of Significantly Different Lengths[a, b, c]

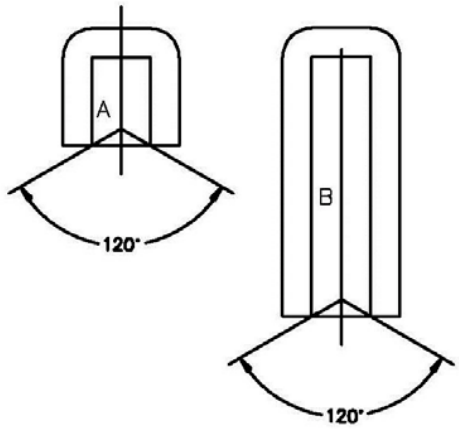

[a]See paragraph V3.E3.1.5.
[b]Site A as a side-to-front (unbarricaded) ES.
[c]Site B as a front (unbarricaded)-to-side ES.

Figure V3.E3.F8. ECM Orientation Effects on Barricaded and Unbarricaded IMD and ILD[a, b, c]

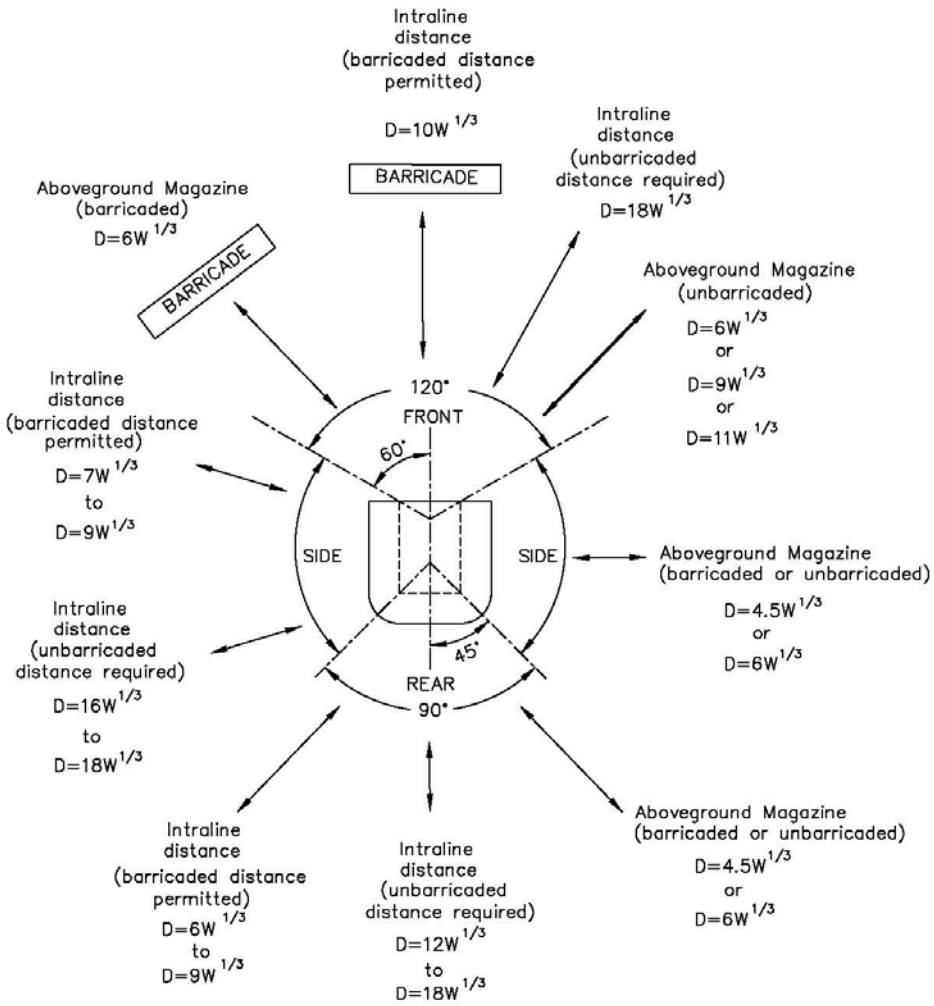

[a]See paragraph **V3.E3.1.4.1.** for application of ILDs from an ECM.
[b]See paragraph **V3.E3.1.5.2.** for application of barricaded IMD and ILD from an ECM.
[c]See Table **V3.E3.T6.** for application of IMDs between ECMs and AGMs.

INTENTIONALLY LEFT BLANK

VOLUME 4: QD CRITERIA FOR AIRFIELDS AND HELIPORTS, PIERS AND WHARFS, AND SPECIFIC FACILITIES

V4.1. INTRODUCTION. This volume provides QD criteria for airfields and heliports, piers and wharfs, and specific facilities.

VOLUME 4 – ENCLOSURE 1: REFERENCES

See References section at the end of the manual.

VOLUME 4 – ENCLOSURE 2: RESPONSIBILITIES

See Volume 1 – Enclosure 2.

VOLUME 4 – ENCLOSURE 3: AIRFIELDS AND HELIPORTS

V4.E3.1. SCOPE AND APPLICATION. This enclosure:

V4.E3.1.1. Applies to AE that is under the control and custody of DoD personnel at airfields and heliports. **Volume 6 – Enclosure 3** applies when these requirements cannot be met for contingencies, combat operations, and military operations other than war.

V4.E3.1.2. Does not apply to AE installed on aircraft (e.g., egress system components, squibs, and detonators for jettisoning external stores, engine-starter cartridges, fire extinguisher cartridges, and destructors in electronic equipment), contained in survival and rescue kits (e.g., flares, signals, explosives components of emergency equipment), and other such items or materials necessary for safe flight operations.

V4.E3.1.2. **(Added)(AF)** See Glossary and TO 11A-1-33 for further information.

V4.E3.1.3. (Added)(AF) General Airfield Criteria.

V4.E3.1.3.1. **(Added)(AF)** Airfield Criteria. Reference UFC 3-260-01 and AFMAN 32-1084 for minimum airfield criteria for parked explosives-loaded aircraft. If airfield criteria deviations are required, address the status of the deviations in the ESP transmittal letter.

V4.E3.1.3.2. **(Added)(AF)** Forward Firing Munitions. Weapon systems such as guns, rockets, missiles, and flare dispensers pose an additional hazard (beyond their explosives hazard) because of their directional response and potential long range if inadvertently activated on the ground. QD requirements do not address this additional hazard. Comply with the following to minimize this additional hazard:

V4.E3.1.3.2.1. **(Added)(AF)** Position aircraft to present the minimum hazard to personnel and resources in the event of a mishap.

V4.E3.1.3.2.2. **(Added)(AF)** Do not unnecessarily stand or park vehicles in front of, or behind, these munitions when power is applied to the aircraft.

V4.E3.1.3.3. **(Added)(AF)** Comply with AFI 91-101 for prime nuclear airlift force missions. **(T-1).**

V4.E3.1.4. (Added)(AF) Explosives Cargo Aircraft Related Activities. Consider flightline personnel who solely support explosives cargo aircraft related to explosives cargo and explosives cargo aircraft. These exposures may be separated at ILD from such AE and other installation PESs as mentioned in paragraph **V3.E3.1.1.2.2.1.**

V4.E3.1.5. (Added)(AF) Munitions or Weapons Storage Area Related Activities.

V4.E3.1.5.1. **(Added)(AF)** Activities directly associated with munitions storage or munitions operations are considered related to MSA AE and may be separated at ILD from such AE.

V4.E3.1.5.2. **(Added)(AF)** Munitions support functions and facilities involving explosives may be considered related to each other (regardless of owning service, organization or country), if they are related to MSA AE.

V4.E3.1.5.3. **(Added)(AF)** Separate MSA-related facilities from other installation PESs by ILD; see paragraph **V3.E3.1.1.2.2.1.**

V4.E3.1.6. (Added)(AF) Integrated Combat Turnarounds (ICT). For applicable aircraft, as described in TO 00-25-172, using live munitions will be conducted in sited CAPA locations. Identify inert ICT locations as ESs when they are located within a clear zone.

V4.E3.1.7. (Added)(AF) Hot-Pit Refueling Operations. All aircraft undergoing hot-pit refueling are considered to be in transportation mode and are exempt from QD criteria as a PES. Evaluate the hot-pit refueling area and associated aircraft as an ES; apply the greater separation treating the location as a military use only taxiway or separation required for the POL. See section **V4.E5.13.** for QD requirements for the POL facilities associated with the hot-pit refueling area.

V4.E3.1.8. (Added)(AF) End-of-Runway (EOR) and Arm or de-Arm Pads and Crew Shelters. All aircraft undergoing EOR or arm or de-arm operations are considered to be in transportation mode and are exempt from QD criteria as a PES. As an ES, treat as a military use only taxiway. Site EOR and arm or de-arm crew shelters as military use only runways per Tables **V3.E3.T17.**, **V3.E3.T18.**, and **V3.E3.T19.** If these shelters are used as office areas for arm or de-arm crews, site these exposures at IBD, with no minimum fragment distance, from MSA, PESs, and ILD from flightline PESs.

V4.E3.1.9. (Added)(AF) Other Aircraft Configurations.

V4.E3.1.9.1. **(Added)(AF)** For F-15 and F-16 aircraft in the open with AIM or Air-to-Ground series missile configurations use Table **V3.E3.T17.** to determine the type of QD separation required for ESs. For aircraft in a structure, apply building debris criteria IAW paragraph **V3.E3.1.2.1.1.1.5.** or **V3.E3.1.2.1.1.1.8.** Exception: Aircraft in fabric or tubular shelters or light metal structures (e.g., butler building), apply the criteria above for aircraft in the open. Other aircraft configurations with mixed missile loads may be requested through MAJCOM/SEW. These distances are not reduced QD separations; they are only provided to simplify determination of required QD separations for standard aircraft configurations.

V4.E3.1.9.2. **(Added)(AF)** Internally loaded aircraft, e.g., F-35 and F-22, produce secondary debris; therefore, building debris criteria must be considered unless otherwise specified.

V4.E3.1.10. (Added)(AF) Reduced MCEs for F-15, F-16, and F-22 Aircraft with AIM Series Missiles. Testing and analysis have demonstrated an allowable reduction in MCE and

QD for some F-15 and F-16 configurations. Use of these reductions is only allowed if no single trailer servicing the aircraft would present an MCE greater than the MCE used to generate the aircraft QD arcs. In most cases, this means that the trailer cannot be loaded with more than the MCE of missiles. Where test results permit, such as in the case of a single layer of AIM-120 missiles loaded in alternating directions on a single trailer, reduced trailer MCEs may be applied. In that specific case, the trailer MCE is a single AIM-120 missile. For F-15 and F-16 aircraft in the open with AIM series missile configurations as shown in Figures **V4.E3.F2.** and **V4.E3.F3.** use Table **V3.E3.T17.** to determine the type of QD separation required for ESs and use the following to determine actual QD separation distances:

V4.E3.1.10.1. **(Added)(AF)** For F-15 aircraft in the open see Figure **V4.E3.F2.**

V4.E3.1.10.2. **(Added)(AF)** For F-16 aircraft in the open see Figure **V4.E3.F3.**

V4.E3.1.10.3. **(Added)(AF)** For F-22 aircraft in the open with AIM series missile configurations use Table **V3.E3.T17.** to determine the type of QD separation required for ESs. Use the following to determine actual QD separations distances:

V4.E3.1.10.3.1. **(Added)(AF)** Configuration 1, four AIM-120s and two AIM-9s. NEWQD for MCE is 19.0 lbs. The HFD and IBD is 400 feet, PTR is 240 feet, ILD is 48 feet, and IMD is 10 feet. The AIM-9s will always be on stations 3 and 10 and the AIM-120s can be on stations 4 and 5, 8 and 9, or 5 and 6, and 7 and 8.

V4.E3.1.10.3.2. **(Added)(AF)** Configuration 2, six AIM-120s and two AIM-9s. NEWQD for MCE is 19.0 lbs. The HFD and IBD is 400 feet, PTR is 240 feet, ILD is 48 feet, and IMD is 10 feet. The AIM-9s will always be on stations 3 and 10 and the AIM-120s on stations 4, 5, or 6 and 7, 8, or 9.

V4.E3.1.10.3.3. **(Added)(AF)** Configuration 3, two AIM-120s and two AIM 9s. NEWQD for MCE is 19.0 lbs. The HFD and IBD is 400 feet, PTR is 240 feet, ILD is 48 feet, and IMD is 10 feet. AIM-120s must be AIM-120, Weapon Delivery Unit (WDU)-33/Bs or AIM-120, WDU-41/Bs. AIM-9s must be AIM-9M, WDU-17s or AIM-9Xs.

V4.E3.1.10.4. **(Added)(AF)** For F-15, F-16, and F-22 aircraft in fabric or tubular shelters or light metal structures (e.g., butler building), apply the criteria above for aircraft in the open. **(T-1).**

V4.E3.1.10.5. **(Added)(AF)** For any other type of structure, building debris criteria must be considered IAW paragraph **V3.E3.1.2.1.1.1.5.** or **V3.E3.1.2.1.1.1.8. (T-1).**

V4.E3.2. MEASUREMENT OF SEPARATION DISTANCES. In applying Tables **V4.E3.T1.** and **V4.E3.T2.**, measure distances as follows:

V4.E3.2.1. Loaded Aircraft to Loaded Aircraft. Measure the shortest distance between AE on one aircraft to AE on the adjacent aircraft.

V4.E3.2.2. AE Location to Taxiways and Runways. Measure from the nearest point of the AE location to the:

V4.E3.2.2.1. Nearest point of the taxiway.

V4.E3.2.2.2. Centerline of the runway.

V4.E3.3. AE PROHIBITED AREAS. Areas immediately beyond the ends of runways and along primary flight paths are subject to more aircraft accidents than other areas. For this reason, AE is prohibited from accident potential zones I and II and clear zones of all aircraft landing facilities, as designated and described in detail in the DoD Component airfield and airspace criteria directives.

V4.E3.3.1. **(Added)(AF)** For prohibited areas, refer to UFC 3-260-01 and as defined by the MAJCOM's. Accomplish deviations to AE prohibited areas through risk acceptance documentation according to **Volume 1 – Enclosure 3**. ESP submittals must reference the approved airfield waiver as supporting justification for the deviation. **(T-1).**

V4.E3.4. ADDITIONAL SITING CRITERIA. This enclosure's QD criteria must be applied with the airfield clearance criteria that is prescribed by the DoD Component and Federal Aviation Administration (FAA) regulations (part 77 of Title 14, CFR). For airfields and heliports:

V4.E3.4.1. Used Exclusively by the DoD Components and Allied Nation Military Components. CAPAs, AE cargo areas, alert hangars, and shelters may be located within the airfield clearance zone, with the exception of AE prohibited areas (see section **V4.E3.3.**).

V4.E3.4.2. Not Used Exclusively by the DoD Components and Allied Nation Military Components. CAPAs, AE cargo areas, alert hangars, and shelters must be located as prescribed in Tables **V4.E3.T1.** and **V4.E3.T2.**

V4.E3.5. AIRCRAFT PARKING AREAS

V4.E3.5.1. Uploading and downloading of AE must be conducted at explosives-sited aircraft parking areas.

V4.E3.5.2. QD is not required for:

V4.E3.5.2.1. Aircraft loaded with AE shown in paragraphs **V4.E3.5.2.1.1.** through **V4.E3.5.2.1.3.** and parked in designated aircraft parking areas that meet airfield criteria when evaluated as a PES:

V4.E3.5.2.1. **(Added)(AF)** Site these locations as ESs. This does not include AE carried as cargo. Park in a designated aircraft parking area meeting airfield criteria and treat the aircraft as explosives-loaded in all other respects. Munitions delivery trailers (e.g., UALS, bomb dummy

unit, flare & chaff mods, captive-carry missiles) are considered in the transportation mode (QD-exempt) provided the trailers do not remain at the designated aircraft parking area longer than the loading or unloading operation being conducted.

V4.E3.5.2.1.1. HD 1.2.2: gun AE, 30 millimeter or less.

V4.E3.5.2.1.2. HD 1.3: Captive missiles, aircraft defensive flares or chaff.

V4.E3.5.2.1.2. **(Added)(AF)** Externally loaded munitions such as LUU-1/2 flares and 2.75" training rockets require QD.

V4.E3.5.2.1.3. HD 1.4 AE.

V4.E3.5.2.2. Uploading and downloading AE listed in paragraph **V4.E3.5.2.1.**, at a designated aircraft parking area, provided the quantity of AE involved in the operation is limited to a single aircraft load.

V4.E3.5.2.3. Uploading and downloading of security force ammunition issued to embarked security forces for designated missions.

V4.E3.6. COMBAT AIRCRAFT SUPPORT FACILITIES. See paragraph **V3.E3.1.1.2.1.11.** for separation distance criteria associated with such facilities. When operational necessity dictates, separation distances less than K-factor (English system) K18 [K-factor (metric system) K_m 7.14] may be approved; however, it must be demonstrated that K18 [K_m 7.14] equivalent protection is provided.

Table V4.E3.T1. Application of AE Separation Distances for Airfields and Heliports

From ➔ / To ➓	Hardened Aircraft Shelter	Combat Aircraft Parking Area	AE Cargo Area	AE Storage Facility	AE Operating Facility	Ready Ammunition Storage Facility
Hardened Aircraft Shelter (HAS)	a	b	b	c	c	d
Maintenance HAS	e	f	f	c	c	g
CAPA	h	h	h	i	i	h
AE Cargo Area	h	h	h	h	h	h
AE Storage Facility	h	h	h	h	h	h
AE Operating Facility	j	j	j	j	j	j
Ready Ammunition Storage Facility	d	h	h	h	h	h
Inhabited Building	k	k	k	k	k	k
PTR and Taxiway (joint DoD-Non DoD use)	l	l	l	l	l	l
Runway (joint DoD-Non DoD use)	k	k	k	k	k	k
Runway/Taxiway (DoD Component use only)	None	None	None	m	l	None
Aircraft Parking Area	n	n	n	o	o	n
Aircraft Passenger Loading/Unloading Area	p	p	p	p	p	p
Recreation Area	q	q	r	r	r	q

a	See paragraph **V4.E3.7.3.**
b	If the PES NEWQD is less than or equal to 22,000 lbs [9,979 kg], see paragraph **V4.E3.7.3.**; treat the PES as a HAS Ready Service AGM for application of Tables **V4.E3.T4.** and **V4.E3.T6.** If the PES NEWQD is greater than 22,000 lbs [9,979 kg], apply Footnote h.
c	Apply the storage area ECM or AGM (as applicable) column of Table **V4.E3.T6.**
d	For HAS Ready Service AGM or ECM, apply Table **V4.E3.T4.** for HD 1.1 and apply Footnote n for HD 1.2. For any other ready ammunition storage facility, apply Footnote h.
e	See paragraph **V4.E3.7.5.**
f	See paragraph **V4.E3.7.5.** If the PES NEWQD is less than or equal to 22,000 lbs [9,979 kg], the PES may be treated as a HAS Ready Service AGM for application of Table **V4.E3.T6.** If the PES NEWQD is greater than 22,000 lbs [9,979 kg], or Table **V4.E3.T6.** is not applied for aircraft survivability, then ILD equivalent protection (3.5 psi [24 kPa]) will be provided to personnel within the maintenance HAS.
g	See paragraph **V4.E3.7.5.** For HAS Ready Service AGM or ECM, Tables **V4.E3.T5.** and **V4.E3.T6.** may be applied. For any other ready ammunition storage facility, or if Tables **V4.E3.T5.** and **V4.E3.T6.** are not applied for aircraft survivability, then ILD equivalent protection (3.5 psi [24 kPa]) will be provided to personnel within the maintenance HAS.

Table V4.E3.T1. Application of AE Separation Distances for Airfields and Heliports, Continued

h	For HD 1.1, use applicable IMD. For HD 1.2, apply Footnote n. Protects against simultaneous detonation of AE on adjacent aircraft, but does not prevent serious damage to aircraft and possible propagation of detonation due to fragments, debris, or fire.
i	Use Table **V4.E3.T2.** distances for mass-detonating items and applicable PTRD for nonmass-detonating items.
j	Use applicable ILD. Apply ILD in accordance with paragraph **V4.E3.7.4.** when the PES is a HAS.
k	Use applicable IBD. Apply IBD in accordance with paragraph **V4.E3.7.4.** when the PES is a HAS.
l	Use applicable PTRD. K4.5 [K_m 1.79] is allowable outside the United States, if deemed operationally essential, and provided the resultant transient risk to military aircraft is acceptable. **(Added)(AF)** The use of K4.5 for AF personnel is not allowed. **(T-1).**
m	For HD 1.1, use unbarricaded ILD in accordance with Table **V3.E3.T5.** from side or rear of ECMs to taxiways; for HD 1.2, HD 1.3 or HD 1.4, no separation is required from side or rear of ECMs to taxiways. Use PTRD from front of ECMs or any other storage locations to taxiways. Use PTRD from all storage locations to runways. K4.5 [K_m 1.79] is allowable outside the United States, if deemed operationally essential and the resultant transient risk to military aircraft is acceptable.
n	Within these areas of airfields and heliports exclusively used by the DoD Components, the separation of aircraft parking areas from CAPAs and their ready AE storage facilities and AE cargo areas are considered to be a command function. At joint DoD/non-DoD use airfields and heliports, the CAPAs and their ready AE storage facilities and AE cargo area must be separated from non-DoD aircraft as specified in Footnote o.
o	Use Table **V4.E3.T2.** distances for the DoD Components' aircraft parking areas. Use applicable IBD for non-DoD entity aircraft parking areas; apply IBD in accordance with paragraph **V4.E3.7.4.** when the PES is a HAS.
p	Use applicable PTRD for locations in the open where passengers enplane and deplane; apply PTRD in accordance with paragraph **V4.E3.7.4.** when the PES is a HAS. Use applicable IBD if a structure is included where passengers assemble, such as a passenger terminal building; apply IBD in accordance with paragraph **V4.E3.7.4.** when the PES is a HAS.
q	No distance required to recreational areas that are used exclusively for alert personnel manning the combat-loaded aircraft. Other recreational areas where people are in the open must be at applicable PTRD; apply PTRD in accordance with paragraph **V4.E3.7.4.** when the PES is a HAS. When structures, including bleacher stands, are a part of such areas, use applicable IBD; apply IBD in accordance with paragraph **V4.E3.7.4.** when the PES is a HAS.
r	Recreational areas, where people are in the open, must be at applicable PTRDs. When structures, including bleacher stands are part of such areas, use applicable IBDs.

Table V4.E3.T2. HD 1.1 QD for Military Aircraft Parking Areas

NEWQD	Distance for Specific Targets Indicated in Table **V4.E3.T1.**[a, b, c]
(lbs)	(ft)
[kg]	*[m]*
50	111
22.7	*33.7*
70	124
31.8	*37.7*
100	139
45.4	*42.4*
150	159
68.0	*48.6*

Table V4.E3.T2. HD 1.1 QD for Military Aircraft Parking Areas, Continued

NEWQD	Distance for Specific Targets Indicated in Table **V4.E3.T1.**[a, b, c]
(lbs)	(ft)
[kg]	*[m]*
200	175
90.7	*53.5*
300	201
136.1	*61.2*
500	238
226.8	*72.6*
700	266
317.5	*81.2*
1,000	300
453.6	*91.4*
1,500	343
680.4	*104.7*
2,000	378
907.2	*115.2*
3,000	433
1,360.8	*131.9*
5,000	513
2,268.0	*156.4*
7,000	574
3,175.1	*174.9*
10,000	646
4,535.9	*197.0*
15,000	740
6,803.9	*225.5*
20,000	814
9,071.8	*248.2*
30,000	932
13,608	*284.1*
50,000	1,105
22,680	*336.9*
70,000	1,236
31,751	*376.9*
100,000	1,392
45,359	*424.4*
150,000	1,594
68,039	*485.8*
200,000	1,754
90,718	*534.7*

Table V4.E3.T2. HD 1.1 QD for Military Aircraft Parking Areas, Continued

NEWQD	Distance for Specific Targets Indicated in Table **V4.E3.T1.**[a, b, c]
(lbs)	(ft)
[kg]	*[m]*
300,000	2,008
136,077	*612.1*
500,000	2,381
226,795	*725.8*

a	English equations (EQNs) (distance (D) in ft, NEWQD in lbs) $D = 30*W^{1/3}$ with a minimum distance of 111 ft — EQN V4.E3.T2-1 $NEWQD = D^3/27{,}000$ with a minimum NEWQD of 50 lbs — EQN V4.E3.T2-2 *Metric EQNs (D in m, NEWQD in kg)* *$D = 11.9*Q^{1/3}$ with a minimum distance of 33.8 m — EQN V4.E3.T2-3* *$NEWQD = D^3/1{,}685.2$ with a minimum NEWQD of 22.7 kg — EQN V4.E3.T2-4*
b	Minimum fragment distance requirements for HD 1.1 (see paragraph **V3.E3.1.2.**) do not apply to targets for which this table is used.
c	To protect against low-angle, high-speed fragments, barricades should be provided; however, these distances must not be reduced.

V4.E3.7. HAS

V4.E3.7.1. General

V4.E3.7.1.1. All HASs, except Korean Theatre Air Base Vulnerability (TAB VEE) HAS fronts and Korean flow-through HAS fronts and rears, are structures capable of stopping primary fragments when doors are properly secured. HD 1.1 and HD 1.2.3 parenthetical (xx) fragment distances do not apply except out the front of a Korean TAB VEE and out the front and rear of a Korean flow-through HAS.

V4.E3.7.1.2. The front, side, or rear sectors of a HAS as either a PES or an ES are illustrated in Figure **V4.E3.F1.**

Figure V4.E3.F1. HAS Orientation Effects[a]

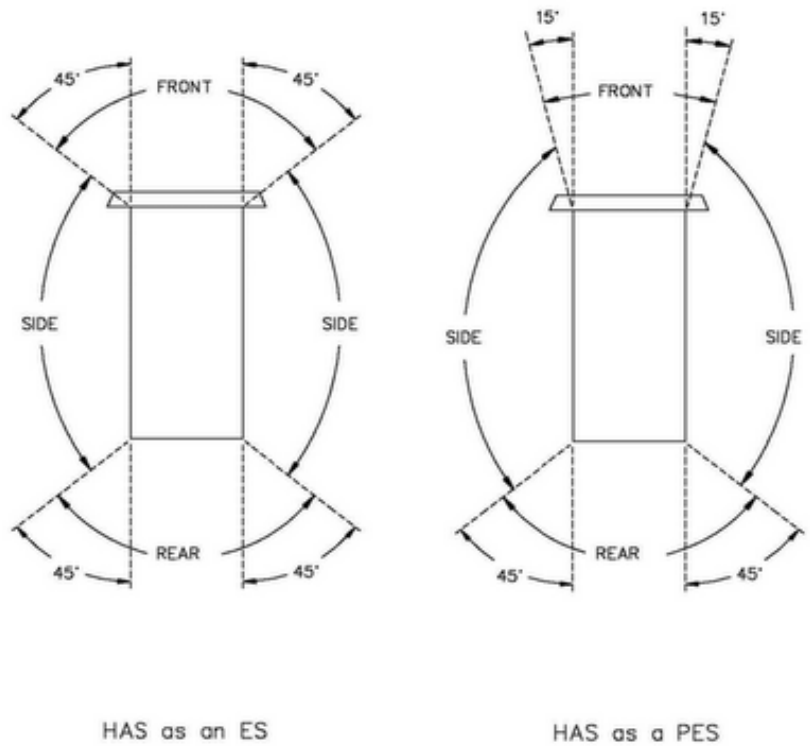

[a] See paragraph V4.E3.7.1.2.

Figure V4.E3.F2. (Added)(AF) Reduced MCEs and QDs for F-15 Aircraft in the Open.

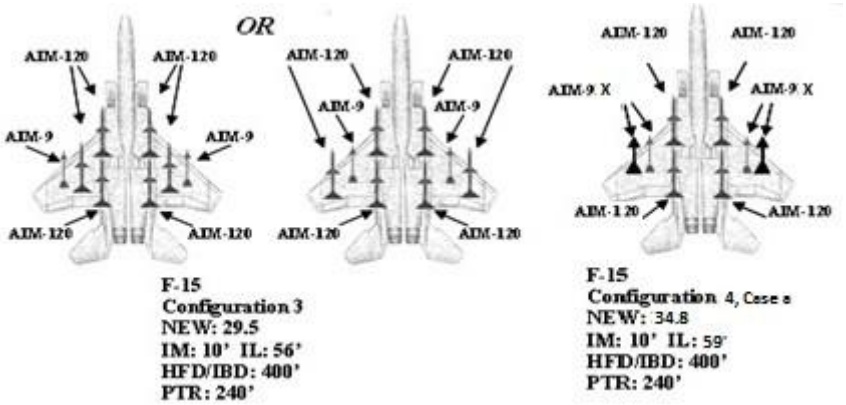

Notes: **(Added)(AF)**

1. **(Added)(AF)** Use of this figure is only allowed if no single trailer servicing the aircraft would present an MCE greater than the MCE used to generate the aircraft QD arcs. In most cases, this means that the trailer cannot be loaded with more than the MCE of missiles. Where test results permit, such as in the case of a single layer of AIM-120 missiles loaded in alternating directions on a single trailer, apply reduced trailer MCEs. In that specific case, the trailer MCE is a single AIM-120 missile. Do not consider IM or IL criteria for the internal HD 1.2 gun ammunition and internal HD 1.3 flares with these loads.
2. **(Added)(AF)** Unless otherwise specified, AIM-120s must be AIM-120, WDU-33/Bs or AIM-120, WDU-41/Bs, and AIM-9s must be AIM-9M/X WDU-17s 9.1-lb warheads.
3. **(Added)(AF)** Subsets of any configuration are acceptable as long as remaining missiles match type and location shown in the configuration.
4. **(Added)(AF)** Base IM for all configurations on the minimum aircraft separation requirement of 10 feet. If circumstances require locating aircraft at less than this distance, then lesser IM distances may be approved by AFSEC/SEW. Request approval through MAJCOM/SEW.

Figure V4.E3.F3. (Added)(AF) Reduced MCEs and QDs for F-16 Aircraft in the Open.[1,2,3,4,5]

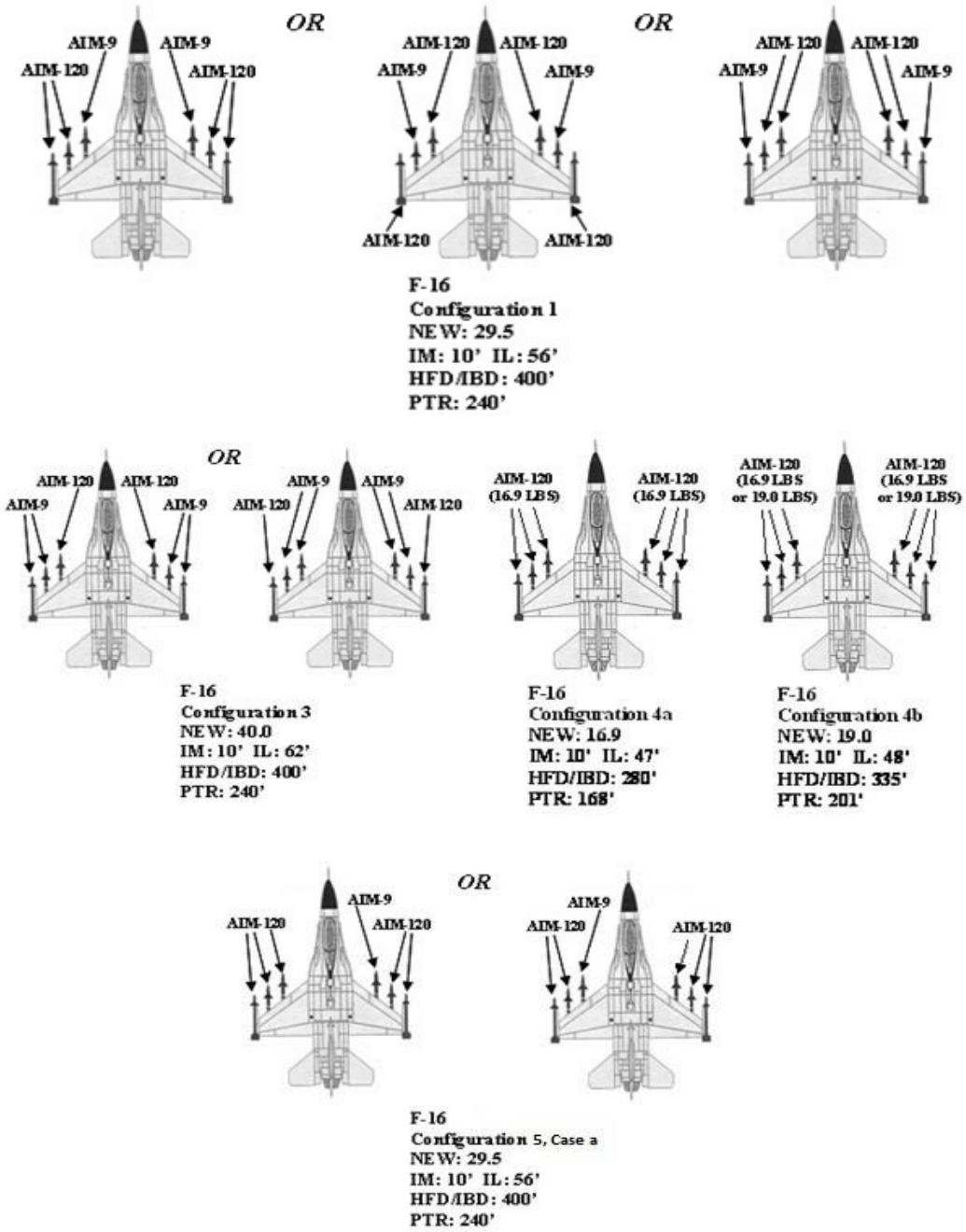

Notes: **(Added)(AF)**

1. **(Added)(AF)** Use of this figure is only allowed if no single trailer servicing the aircraft would present an MCE greater than the MCE used to generate the aircraft QD arcs. In most cases, this means that the trailer cannot be loaded with more than the MCE of missiles. Where test results permit, such as in the case of a single layer of AIM-120 missiles loaded in alternating directions on a single trailer, reduced trailer MCEs may be applied. In that specific case, the trailer MCE is a single AIM-120 missile. Do not consider IM or IL criteria for the internal HD 1.2 gun ammunition and internal HD 1.3 flares with these loads.

2. **(Added)(AF)** Unless otherwise specified, AIM-120s must be AIM-120, with WDU-33/Bs or AIM-120, with WDU-41/Bs, and AIM-9s must be AIM-9M/X with WDU-17s 9.1-lb warheads.
3. **(Added)(AF)** Subsets of any configuration are acceptable as long as remaining missiles match type and location shown in the configuration.
4. **(Added)(AF)** Base IM for all configurations on the minimum aircraft separation requirement of 10 feet. If circumstances require locating aircraft at less than this distance, then lesser IM distances may be approved by AFSEC/SEW. Request approval through MAJCOM/SEW.

V4.E3.7.2. Allowable NEWQD. First generation and Korean TAB VEE HASs are limited to a maximum NEWQD of 5,863 lbs [2,659.4 kg]. Second generation, third generation, and Korean flow-through HASs are limited to a maximum NEWQD of 11,000 lbs [4,989.5 kg]. Flow-through HAS pairs are limited to a maximum NEWQD of 4,800 lbs [2,177.2 kg] in each HAS. HAS pairs with rear walls or with front and rear walls are limited to a maximum NEWQD of 2,390 lbs [1,084.1 kg] in each HAS. HAS ready service ECM and AGM are limited to a maximum NEWQD of 22,000 lbs [9,979 kg].

V4.E3.7.2.1. **(Added)(AF)** HAS with loaded WSV are limited to 10,000 lbs, see AFI 91-112.

V4.E3.7.2.2. **(Added)(AF)** WSVs in HASs. The nuclear weapon contents of a WSV will not contribute to an explosion in a HAS if certain separations are maintained. The explosives in the WSV need not be considered when computing the NEWQD of the HAS if the presence and location of conventional munitions in the HAS correctly conform to what is allowed by the applicable WSSRs, AFI 91-112. Table **V4.E3.T4.** provides minimum separation distances for HASs containing WSVs from all other HASs, with or without WSVs.

V4.E3.7.3. HAS Separation for IMD and Asset Preservation

V4.E3.7.3.1. HASs must be separated according to Tables **V4.E3.T3.** and **V4.E3.T4.**, which provides IMD (or equivalent) protection. For first, second, and third generation HASs, and Korean TAB VEE modified (with hardened front closure) HASs, these distances will also provide a high degree of protection against delayed propagation of explosion when HAS doors are properly secured. However, the exposed shelter may be damaged heavily and aircraft and AE therein may be rendered unserviceable. For Korean TAB VEE HAS front and Korean flow-through HAS front and rear (due to openings) at these distances there may be serious damage to aircraft and possible delayed propagation of detonation due to fragments, debris, or fire.

V4.E3.7.3.2. HASs separated according to Tables **V4.E3.T5.** and **V4.E3.T6.** (and with HAS doors properly secured) will be provided a higher degree of asset preservation (K30 [K_m 11.9] or equivalent overpressure) than that provided in Tables **V4.E3.T3.** and **V4.E3.T4.** An explosion in one shelter or ready storage facility may destroy it and its contents, but aircraft within adjacent shelters will be undamaged provided the doors are closed. These aircraft may not be immediately accessible due to debris.

V4.E3.7.3.3. Tables **V4.E3.T3.** through **V4.E3.T6.** criteria are based on first, second, and third generation HAS doors remaining closed, except for aircraft towing, fueling, servicing,

run up, or taxi, and during integrated combat turnarounds or short periods when maintenance equipment or munitions are being moved into or out of shelters. If doors are left open for extended periods, apply the following criteria:

V4.E3.7.3.3.1. For prevention of simultaneous detonation, apply default IMD to or from an open front. A HAS arch or rear wall may be considered as a barricade for application of K6 [K_m 2.38] to or from a "door open" HAS front. No reduction from K11 [K_m 4.36] is allowed between "door open" HAS front-to-front exposures.

V4.E3.7.3.3.2. For aircraft survivability, apply Table **V4.E3.T2.** to or from an open front, and to the arch of a HAS with an open front; apply K25 [K_m 9.92], with a minimum distance of 111 ft [33.8 m], to the rear of a HAS with an open front.

V4.E3.7.3.3.3. **(Added)(AF)** Other maintenance activities requiring temporary periods when HAS doors must be opened IAW AFI 21-101.

V4.E3.7.3.3.4. **(Added)(AF)** For prevention of simultaneous detonation, apply default IMD to or from an open front. No reduction from K11 is allowed between "open door" HAS front-to-front exposures.

V4.E3.7.4. HAS Separation to Unhardened ESs

V4.E3.7.4.1. Apply Table **V4.E3.T7.** for separation of unhardened ESs from third generation HASs, provided the NEWQD limitation of paragraph **V4.E3.7.2.** is met. Lesser distances may be permitted to hardened ESs that provide equivalent protection when approved by the DDESB.

V4.E3.7.4.2. Provided the NEWQD limitations of paragraph **V4.E3.7.2.** are met, apply Table **V4.E3.T7.** for separation of unhardened ESs from second generation and Korean flow-through HASs:

V4.E3.7.4.2.1. To the front, sides, and rear of a second generation HAS.

V4.E3.7.4.2.2. To the sides of a Korean flow-through HAS. For the front and rear, apply default QD criteria.

V4.E3.7.4.3. Provided the NEWQD limitations of paragraph **V4.E3.7.2.** are met, apply Table **V4.E3.T8.** for separation of unhardened ESs from first generation and Korean TAB VEE HASs:

V4.E3.7.4.3.1. To the front, sides, and rear of a first generation HAS.

V4.E3.7.4.3.2. To the sides and rear of a Korean TAB VEE HAS. For the front, apply default QD criteria.

V4.E3.7.4.4. Apply Table **V4.E3.T7.** or **V4.E3.T8.** for separation of unhardened ESs from HAS pairs, as appropriate, for the HAS pair design involved.

V4.E3.7.4.5. First, second, and third generation and Korean TAB VEE HASs sited for HD 1.2, HD 1.3, or HD 1.4 explosives, as shown in paragraphs **V4.E3.7.4.5.1.** through **V4.E3.7.4.5.5.**, do not generate a QD arc out the sides or rear. Korean flow-through HASs sited for HD 1.2, HD 1.3, or HD 1.4 explosives, as shown in paragraphs **V4.E3.7.4.5.1.** through **V4.E3.7.4.5.5.**, do not generate a QD arc out the sides. For HAS pairs, apply the requirements for the HAS pair design involved. Default QD criteria apply out the front of all HASs, and out the front and rear of Korean flow-through HASs.

V4.E3.7.4.5.1. HD 1.2.1, with a MCE less than 110 lbs [50 kg], and an NEWQD subject to the limitations in paragraph **V4.E3.7.2.**

V4.E3.7.4.5.2. Mission essential quantities of HD 1.2.2.

V4.E3.7.4.5.3. HD 1.2.3, with an MCE less than 110 lbs [50 kg], and an NEWQD subject to the limitations in paragraph **V4.E3.7.2.**

V4.E3.7.4.5.4. Mission essential quantities of HD 1.3.

V4.E3.7.4.5.5. Mission essential quantities of HD 1.4.

V4.E3.7.5. Maintenance HASs. A HAS used solely as a maintenance facility would normally be classified as a related facility and would require ILD separation from a supported PES. As an ES, a first, second, or third generation maintenance HAS will provide K30 [K_m 11.9] equivalent protection at the reduced distances shown in Tables **V4.E3.T5.** and **V4.E3.T6.** with doors properly secured. If Tables **V4.E3.T5.** and **V4.E3.T6.** are not applied for aircraft survivability, then at a minimum, provide ILD equivalent protection (3.5 psi [24 kPa]) to personnel within the maintenance HAS.

V4.E3.7.6. **(Added)(AF)** The front, side, or rear sectors of a HAS, as either a PES or an ES, are illustrated in Figure **V4.E3.F1.**

V4.E3.7.7. **(Added)(AF)** Locate occupied, unhardened facilities no closer to a HAS than those distances given in Tables **V4.E3.T7.** or **V4.E3.T8.**

V4.E3.7.8. (Added)(AF) Revetments.

V4.E3.7.8.1. **(Added)(AF)** A connected series (revetment sets) of such revetments meeting the requirements of paragraph **V2.E5.4.5.** may be sited for the explosives weight of one revetment.

V4.E3.7.8.2. **(Added)(AF)** Site flightline revetment sets for combat aircraft parking and loading as a CAPA according to Tables **V3.E3.T17.**, **V3.E3.T18.**, and **V3.E3.T19.** These revetment sets may be used for both aircraft parking and munitions holding. Aircraft in revetments are afforded equivalent IMD separation. Per Table **V3.E3.T17.**, Note 14, two aircraft

may be placed in a revetted cell at less than IMD without obtaining commander approval; total the NEWQD of the two aircraft for determining QD separations to other exposures.

V4.E3.7.8.3. **(Added)(AF)** Site flightline revetment sets used for munitions as flightline munitions holding areas according to Tables **V3.E3.T17.**, **V3.E3.T18.**, and **V3.E3.T19.**

V4.E3.7.8.4. **(Added)(AF)** Site revetment sets used solely for the storage of munitions as AGMs according to Tables **V3.E3.T17.**, **V3.E3.T18.**, and **V3.E3.T19.**

V4.E3.7.9. (Added)(AF) Aircraft Battle Damage Repair Sites. The maximum NEWQD charge permitted is two ounces of HD 1.1. **(T-1).** When using sandbags to cover charges and prevent fragment escape, a 300-foot clear zone is required. For un-sandbagged charges, a 500-foot clear zone is necessary.

Table V4.E3.T3. Minimum Hazard Factor for HASs to Prevent Simultaneous Detonation, Part 1[a, b, c, d]

To ↓ / From →		1st Generation HAS			2nd and 3rd Generation HAS			Korean TAB VEE HAS [e]		
		S	R	F	S	R	F	S	R	F
1st Generation HAS	S	2 *0.79*	2 *0.79*	2.75 *1.09*	2 *0.79*	2 *0.79*	2.75 *1.09*	2 *0.79*	2 *0.79*	4.5 *1.79*
	R	2 *0.79*	2 *0.79*	2.75 *1.09*	2 *0.79*	2 *0.79*	2.75 *1.09*	2 *0.79*	2 *0.79*	4.5 *1.79*
	F	6 *2.38*	4.5 *1.79*	8 *3.17*	6 *2.38*	4.5 *1.79*	9 *3.57*	6 *2.38*	4.5 *1.79*	11 *4.36*
2nd and 3rd Generation HAS	S	2 *0.79*	2 *0.79*	2.75 *1.09*	2 *0.79*	2 *0.79*	2.75 *1.09*	2 *0.79*	2 *0.79*	4.5 *1.79*
	R	2 *0.79*	2 *0.79*	2.75 *1.09*	2 *0.79*	2 *0.79*	2.75 *1.09*	2 *0.79*	2 *0.79*	4.5 *1.79*
	F	4.5 *1.79*	2.75 *1.09*	5 *1.98*	4.5 *1.79*	2.75 *1.09*	6 *2.38*	4.5 *1.79*	2.75 *1.09*	11 *4.36*
Korean TAB VEE HAS[e]	S	2 *0.79*	2 *0.79*	2.75 *1.09*	2 *0.79*	2 *0.79*	2.75 *1.09*	2 *0.79*	2 *0.79*	4.5 *1.79*
	R	2 *0.79*	2 *0.79*	2.75 *1.09*	2 *0.79*	2 *0.79*	2.75 *1.09*	2 *0.79*	2 *0.79*	4.5 *1.79*
	F	6 *2.38*	6 *2.38*	11 *4.36*	6 *2.38*	6 *2.38*	11 *4.36*	6 *2.38*	6 *2.38*	11 *4.36*
Korean Flow-Through HAS	S	2 *0.79*	2 *0.79*	2.75 *1.09*	2 *0.79*	2 *0.79*	2.75 *1.09*	2 *0.79*	2 *0.79*	4.5 *1.79*
	F/R	6 *2.38*	6 *2.38*	11 *4.36*	6 *2.38*	6 *2.38*	11 *4.36*	6 *2.38*	6 *2.38*	11 *4.36*
HAS Ready Service ECM	S	2 *0.79*	2 *0.79*	2.75 *1.09*	2 *0.79*	2 *0.79*	2.75 *1.09*	2 *0.79*	2 *0.79*	6 *2.38*
	R	2 *0.79*	2 *0.79*	2.75 *1.09*	2 *0.79*	2 *0.79*	2.75 *1.09*	2 *0.79*	2 *0.79*	6 *2.38*
	FB	2.75 *1.09*	2.75 *1.09*	5 *1.98*	2.75 *1.09*	2.75 *1.09*	6 *2.38*	2.75 *1.09*	2.75 *1.09*	6 *2.38*
	FU	6 *2.38*	4.5 *1.79*	8 *3.17*	6 *2.38*	4.5 *1.79*	9 *3.57*	6 *2.38*	4.5 *1.79*	11 *4.36*
HAS Ready Service AGM	B	2.75 *1.09*	2.75 *1.09*	6 *2.38*	2.75 *1.09*	2.75 *1.09*	6 *2.38*	6 *2.38*	6 *2.38*	6 *2.38*
	U	11 *4.36*	11 *4.36*	11 *4.36*	11 *4.36*	11 *4.36*	11 *4.36*	11 *4.36*	11 *4.36*	11 *4.36*

Table V4.E3.T3. Minimum Hazard Factor for HASs to Prevent Simultaneous Detonation, Part 1[a, b, c, d] Continued

F = front; FB = front barricaded; FU = front unbarricaded; R = rear; S = side	
a	Separations are based on first, second, and third generation HAS doors remaining closed, except for aircraft towing, fueling, servicing, run up, or taxi, and during integrated combat turnarounds or short periods when maintenance equipment or munitions are being moved into or out of shelters. If doors are left open for extended periods, apply default IMD to or from an open front. A HAS arch or rear wall may be considered as a barricade for application of K6 [K_m 2.38] to or from a "door open" HAS front. No reduction from K11 [K_m 4.36] is allowed between "door open" HAS front-to-front exposures.
b	First generation and Korean TAB VEE HASs are limited to a maximum NEWQD of 5,863 lbs [2,659.4 kg]. Second generation, third generation, and Korean flow-through HASs are limited to a maximum NEWQD of 11,000 lbs [4,989.5 kg]. HAS ready service ECMs and AGMs are limited to a maximum NEWQD of 22,000 lbs [9,979 kg].
c	Flow-through HAS pairs are limited to a maximum NEWQD of 4,800 lbs [2,177.2 kg] in each HAS. For this NEWQD, IMD equivalent protection is provided between each HAS in a HAS pair. IMD equivalent protection between a HAS pair and adjacent HASs and HAS ready service ECMs and AGMs must be in accordance with this table or Table **V4.E3.T4.** for the HAS designs involved.
d	HAS pairs with rear walls or with front and rear walls are limited to a maximum NEWQD of 2,390 lbs [1,084.1 kg] in each HAS. For this NEWQD, IMD equivalent protection is provided between each HAS in a HAS pair. IMD equivalent protection between a HAS pair and adjacent HASs and HAS ready service ECMs and AGMs must be in accordance with this table or Table **V4.E3.T4.** for the HAS designs involved.
e	A Korean TAB VEE HAS that has been modified to incorporate the hardened front closure of the first generation TAB VEE or TAB VEE modified HAS may be treated as a first generation HAS, provided the doors remain closed except for aircraft towing, fueling, servicing, run up, or taxi, and during integrated combat turnarounds or short periods when maintenance equipment or munitions are being moved into or out of the shelter.

Table V4.E3.T4. Minimum Hazard Factor for HASs to Prevent Simultaneous Detonation, Part 2[a, b, c, d]

From ➔ / To ➔		Korean Flow-Through HAS		HAS Ready Service ECM				HAS Ready Service AGM	
		S	F/R	S	R	FB	FU	B	U
1st Generation HAS	S	2	4.5	2[f]	2[f]	2.75	2.75	2.75	2.75
		0.79	*1.79*	*0.79*[f]	*0.79*[f]	*1.09*	*1.09*	*1.09*	*1.09*
	R	2	4.5	2[f]	2[f]	2.75	2.75	2.75	2.75
		0.79	*1.79*	*0.79*[f]	*0.79*[f]	*1.09*	*1.09*	*1.09*	*1.09*
	F	6	11	2[f]	2.75	6	9	6	9
		2.38	*4.36*	*0.79*[f]	*1.09*	*2.38*	*3.57*	*2.38*	*3.57*
2nd and 3rd Generation HAS	S	2	4.5	2[f]	2[f]	2.75	2.75	2.75	2.75
		0.79	*1.79*	*0.79*[f]	*0.79*[f]	*1.09*	*1.09*	*1.09*	*1.09*
	R	2	4.5	2[f]	2[f]	2.75	2.75	2.75	2.75
		0.79	*1.79*	*0.79*[f]	*0.79*[f]	*1.09*	*1.09*	*1.09*	*1.09*
	F	4.5	11	2[f]	2[f]	2.75	2.75	2.75	2.75
		1.79	*4.36*	*0.79*[f]	*0.79*[f]	*1.09*	*1.09*	*1.09*	*1.09*

Table V4.E3.T4. Minimum Hazard Factor for HASs to Prevent Simultaneous Detonation, Part 2,[a, b, c, d] Continued

From ➔ / To ➓		Korean Flow-Through HAS		HAS Ready Service ECM				HAS Ready Service AGM	
		S	F/R	S	R	FB	FU	B	U
Korean TAB VEE HAS [e]	S	2 *0.79*	4.5 *1.79*	2[f] *0.79*[f]	2[f] *0.79*[f]	2.75 *1.09*	2.75 *1.09*	2.75 *1.09*	2.75 *1.09*
	R	2 *0.79*	4.5 *1.79*	2[f] *0.79*[f]	2[f] *0.79*[f]	2.75 *1.09*	2.75 *1.09*	2.75 *1.09*	2.75 *1.09*
	F	6 *2.38*	11 *4.36*	6 *2.38*	6 *2.38*	6 *2.38*	11 *4.36*	6 *2.38*	11 *4.36*
Korean Flow-Through HAS	S	2 *0.79*	4.5 *1.79*	2[f] *0.79*[f]	2[f] *0.79*[f]	2.75 *1.09*	2.75 *1.09*	2.75 *1.09*	2.75 *1.09*
	F/R	6 *2.38*	11 *4.36*	6 *2.38*	6 *2.38*	6 *2.38*	11 *4.36*	6 *2.38*	11 *4.36*
HAS Ready Service ECM	S	2 *0.79*	6 *2.38*	See Table **V3.E3.T6.**					
	R	2 *0.79*	6 *2.38*						
	FB	2.75 *1.09*	6 *2.38*						
	FU	6 *2.38*	11 *4.36*						
HAS Ready Service AGM	B	6 *2.38*	6 *2.38*						
	U	11 *4.36*	11 *4.36*						

a	Separations are based on first, second, and third generation HAS doors remaining closed, except for aircraft towing, fueling, servicing, run up, or taxi, and during integrated combat turnarounds or short periods when maintenance equipment or munitions are being moved into or out of shelters. If doors are left open for extended periods, apply default IMD to or from an open front. A HAS arch or rear wall may be considered as a barricade for application of K6 [K_m 2.38] to or from a "door open" HAS front. No reduction from K11 [K_m 4.36] is allowed between "door open" HAS front-to-front exposures.
b	First generation and Korean TAB VEE HASs are limited to a maximum NEWQD of 5,863 lbs [2,659.4 kg]. Second generation, third generation, and Korean flow-through HASs are limited to a maximum NEWQD of 11,000 lbs [4,989.5 kg]. HAS ready service ECMs and AGMs are limited to a maximum NEWQD of 22,000 lbs [9,979 kg].
c	Flow-through HAS pairs are limited to a maximum NEWQD of 4,800 lbs [2,177.2 kg] in each HAS. For this NEWQD, IMD equivalent protection is provided between each HAS in a HAS pair. IMD equivalent protection between a HAS pair and adjacent HASs and HAS ready service ECMs and AGMs must be in accordance with this table or Table **V4.E3.T3.** for the HAS designs involved.
d	HAS pairs with rear walls or with front and rear walls are limited to a maximum NEWQD of 2,390 lbs [1,084.1 kg] in each HAS. For this NEWQD, IMD equivalent protection is provided between each HAS in a HAS pair. IMD equivalent protection between a HAS pair and adjacent HASs and HAS ready service ECMs and AGMs must be in accordance with this table or Table **V4.E3.T3.** for the HAS designs involved.

Table V4.E3.T4. Minimum Hazard Factor for HASs to Prevent Simultaneous Detonation, Part 2,[a, b, c, d] Continued

e	A Korean TAB VEE HAS that has been modified to incorporate the hardened front closure of the first generation TAB VEE or TAB VEE modified HAS may be treated as a first generation HAS, provided the doors remain closed except for aircraft towing, fueling, servicing, run up, or taxi, and during integrated combat turnarounds or short periods when maintenance equipment or munitions are being moved into or out of the shelter.
f	If the ECM loading density is < 1.25 lbs/cubic feet (ft^3) [20 kg/cubic meter (m^3)], use:
	English EQN (W in lbs, D in ft) $D = 1.25*W^{1/3}$ EQN V4.E3.T4-1
	Metric EQN (Q in kg, D in m) *$D = 0.5*Q^{1/3}$ EQN V4.E3.T4-2*

Table V4.E3.T5. Minimum Hazard Factor for HASs for Asset Preservation, Part 1[a, b, c]

From ➔ / To ➔		1st/2nd/3rd Generation HAS			Korean TAB VEEHAS [d]			Korean Flow-Through HAS		HAS Ready Service ECM			
		S	R	F	S	R	F	S	F/R	S	R	FB	FU
1st Generation HAS	S	9	6	9	9	6	11	9	11	2.75	2.75	8	8
		3.57	*2.38*	*3.57*	*3.57*	*2.38*	*4.36*	*3.57*	*4.36*	*1.09*	*1.09*	*3.17*	*3.17*
	R	8	5	8	8	5	11	8	11	2.75	2.75	8	8
		3.17	*1.98*	*3.17*	*3.17*	*1.98*	*4.36*	*3.17*	*4.36*	*1.09*	*1.09*	*3.17*	*3.17*
	F	18	18	18	18	18	24	18	24	11	9	18	18
		7.14	*7.14*	*7.14*	*7.14*	*7.14*	*9.52*	*7.14*	*9.52*	*4.36*	*3.57*	*7.14*	*7.14*
2nd and 3rd Generation HAS	S	9	6	9	9	6	11	9	11	2.75	2.75	8	8
		3.57	*2.38*	*3.57*	*3.57*	*2.38*	*4.36*	*3.57*	*4.36*	*1.09*	*1.09*	*3.17*	*3.17*
	R	8	5	8	8	5	11	8	11	2.75	2.75	8	8
		3.17	*1.98*	*3.17*	*3.17*	*1.98*	*4.36*	*3.17*	*4.36*	*1.09*	*1.09*	*3.17*	*3.17*
	F	11	9	18	11	9	18	11	18	2.75	2.75	8	8
		4.36	*3.57*	*7.14*	*4.36*	*3.57*	*7.14*	*4.36*	*7.14*	*1.09*	*1.09*	*3.17*	*3.17*
Korean TAB VEE HAS [d]	S	30	24	24	30	24	30	30	30	30	24	30	30
		11.9	*9.52*	*9.52*	*11.9*	*9.52*	*11.9*	*11.9*	*11.9*	*11.9*	*9.52*	*11.9*	*11.9*
	R	30	24	24	30	24	30	30	30	30	24	30	30
		11.9	*9.52*	*9.52*	*11.9*	*9.52*	*11.9*	*11.9*	*11.9*	*11.9*	*9.52*	*11.9*	*11.9*
	F	30	24	24	30	24	30	30	30	30	24	30	30
		11.9	*9.52*	*9.52*	*11.9*	*9.52*	*11.9*	*11.9*	*11.9*	*11.9*	*9.52*	*11.9*	*11.9*
Korean Flow-Through HAS	S	30	24	24	30	24	30	30	30	30	24	30	30
		11.9	*9.52*	*9.52*	*11.9*	*9.52*	*11.9*	*11.9*	*11.9*	*11.9*	*9.52*	*11.9*	*11.9*
	F/R	30	24	24	30	24	30	30	30	30	24	30	30
		11.9	*9.52*	*9.52*	*11.9*	*9.52*	*11.9*	*11.9*	*11.9*	*11.9*	*9.52*	*11.9*	*11.9*
1st Generation Maintenance HAS[e]	S	9	8	9	9	8	11	9	11	8	8	8	8
		3.57	*3.17*	*3.57*	*3.57*	*3.17*	*4.36*	*3.57*	*4.36*	*3.17*	*3.17*	*3.17*	*3.17*
	R	8	8	8	8	8	11	8	11	8	8	8	8
		3.17	*3.17*	*3.17*	*3.17*	*3.17*	*4.36*	*3.17*	*4.36*	*3.17*	*3.17*	*3.17*	*3.17*
	F	18	18	18	18	18	24	18	24	11	9	18	18
		7.14	*7.14*	*7.14*	*7.14*	*7.14*	*9.52*	*7.14*	*9.52*	*4.36*	*3.57*	*7.14*	*7.14*
2nd and 3rd Generation Maintenance HAS[e]	S	9	8	9	9	8	11	9	11	8	8	8	8
		3.57	*3.17*	*3.57*	*3.57*	*3.17*	*4.36*	*3.57*	*4.36*	*3.17*	*3.17*	*3.17*	*3.17*
	R	8	8	8	8	8	11	8	11	8	8	8	8
		3.17	*3.17*	*3.17*	*3.17*	*3.17*	*4.36*	*3.17*	*4.36*	*3.17*	*3.17*	*3.17*	*3.17*
	F	11	9	18	11	9	18	11	18	8	8	8	8
		4.36	*3.57*	*7.14*	*4.36*	*3.57*	*7.14*	*4.36*	*7.14*	*3.17*	*3.17*	*3.17*	*3.17*

Table V4.E3.T5. Minimum Hazard Factor for HASs for Asset Preservation, Part 1,[a, b, c] Continued

a	Separations are based on first, second, and third generation HAS doors remaining closed, except for aircraft towing, fueling, servicing, run up, or taxi, and during integrated combat turnarounds or short periods when maintenance equipment or munitions are being moved into or out of shelters. If doors are left open for extended periods, apply Table **V4.E3.T2.** to or from an open front, and to the arch of a HAS with an open front; apply K25 [K_m 9.92], with a minimum distance of 111 ft [33.8 m], to the rear of a HAS with an open front.
b	First generation and Korean TAB VEE HASs are limited to a maximum NEWQD of 5,863 lbs [2,659.4 kg]. Second generation, third generation, and Korean flow-through HASs are limited to a maximum NEWQD of 11,000 lbs [4,989.5 kg]. HAS ready service ECMs used to support daily loading are limited to a maximum NEWQD of 22,000 lbs [9,979 kg] and a loading density of not more than 1.25 lbs/ft^3 [20 kg/m^3]. HAS ready service AGMs are limited to a maximum NEWQD of 22,000 lbs [9,979 kg].
c	Asset preservation is not provided between each HAS in a HAS pair. Flow-through HAS pairs are limited to a maximum NEWQD of 4,800 lbs [2,177.2 kg] in each HAS. HAS pairs with rear walls or with front and rear walls are limited to a maximum NEWQD of 2,390 lbs [1,084.1 kg] in each HAS. Asset preservation distances between a HAS pair and adjacent HASs and HAS ready service ECMs and AGMs must be in accordance with this table or Table **V4.E3.T6.** for the HAS designs involved.
d	A Korean TAB VEE HAS that has been modified to incorporate the hardened front closure of the first generation TAB VEE or TAB VEE Modified HAS may be treated as a first generation HAS, provided the doors remain closed except for aircraft towing, fueling, servicing, run up, or taxi, and during integrated combat turnarounds or short periods when maintenance equipment or munitions are being moved into or out of the shelter.
e	These distances reflect K30 [K_m 11.9] equivalent protection (when doors are closed) for the aircraft. If this table or Table **V4.E3.T6.** is not applied for aircraft survivability, then provide ILD equivalent protection (3.5 psi [24 kPa]) to personnel.

Table V4.E3.T6. Minimum Hazard Factor for HASs for Asset Preservation, Part 2[a, b, c]

From ➔ / To ➔		HAS Ready Service AGM		Storage Area ECM				Storage Area AGM	
		B	U	S	R	FB	FU	B	U
1st Generation HAS	S	8	8	5	5	8	*8*	8	8
		3.17	*3.17*	*1.98*	*1.98*	*3.17*	*3.17*	*3.17*	*3.17*
	R	8	8	5	5	8	8	8	8
		3.17	*3.17*	*1.98*	*1.98*	*3.17*	*3.17*	*3.17*	*3.17*
	F	18	18	18	18	18	18	18	18
		7.14	*7.14*	*7.14*	*7.14*	*7.14*	*7.14*	*7.14*	*7.14*
2nd and 3rd Generation HAS	S	8	8	5	5	8	8	8	8
		3.17	*3.17*	*1.98*	*1.98*	*3.17*	*3.17*	*3.17*	*3.17*
	R	8	8	5	5	8	8	8	8
		3.17	*3.17*	*1.98*	*1.98*	*3.17*	*3.17*	*3.17*	*3.17*
	F	8	8	5	5	8	8	8	8
		3.17	*3.17*	*1.98*	*1.98*	*3.17*	*3.17*	*3.17*	*3.17*
Korean TAB VEE HAS [d]	S	30	30	30	24	30	30	30	30
		11.9	*11.9*	*11.9*	*9.52*	*11.9*	*11.9*	*11.9*	*11.9*
	R	30	30	30	24	30	30	30	30
		11.9	*11.9*	*11.9*	*9.52*	*11.9*	*11.9*	*11.9*	*11.9*
	F	30	30	30	24	30	30	30	30
		11.9	*11.9*	*11.9*	*9.52*	*11.9*	*11.9*	*11.9*	*11.9*
Korean Flow-Through HAS	S	30	30	30	24	30	30	30	30
		11.9	*11.9*	*11.9*	*9.52*	*11.9*	*11.9*	*11.9*	*11.9*
	F/R	30	30	30	24	30	30	30	30
		11.9	*11.9*	*11.9*	*9.52*	*11.9*	*11.9*	*11.9*	*11.9*

Table V4.E3.T6. Minimum Hazard Factor for HASs for Asset Preservation, Part 2,[a, b, c] Continued

From ➔ / To ➔		HAS Ready Service AGM		Storage Area ECM				Storage Area AGM	
		B	U	S	R	FB	FU	B	U
1st Generation Maintenance HAS[e]	S	8 *3.17*	8 *3.17*	5 *1.98*	5 *1.98*	8 *3.17*	8 *3.17*	8 *3.17*	8 *3.17*
	R	8 *3.17*	8 *3.17*	5 *1.98*	5 *1.98*	8 *3.17*	8 *3.17*	8 *3.17*	8 *3.17*
	F	18 *7.14*	18 *7.14*	18 *7.14*	18 *7.14*	18 *7.14*	18 *7.14*	18 *7.14*	18 *7.14*
2nd and 3rd Generation Maintenance HAS[e]	S	8 *3.17*	8 *3.17*	5 *1.98*	5 *1.98*	8 *3.17*	8 *3.17*	8 *3.17*	8 *3.17*
	R	8 *3.17*	8 *3.17*	5 *1.98*	5 *1.98*	8 *3.17*	8 *3.17*	8 *3.17*	8 *3.17*
	F	8 *3.17*	8 *3.17*	5 *1.98*	5 *1.98*	8 *3.17*	8 *3.17*	8 *3.17*	8 *3.17*

a	Separations are based on first, second, and third generation HAS doors remaining closed, except for aircraft towing, fueling, servicing, run up, or taxi, and during integrated combat turnarounds or short periods when maintenance equipment or munitions are being moved into or out of shelters. If doors are left open for extended periods, apply Table **V4.E3.T2.** to or from an open front, and to the arch of a HAS with an open front; apply K25 [K_m 9.92], with a minimum distance of 111 ft [33.8 m], to the rear of a HAS with an open front.
b	First generation and Korean TAB VEE HASs are limited to a maximum NEWQD of 5,863 lbs [2,659.4 kg]. Second generation, third generation, and Korean flow-through HASs are limited to a maximum NEWQD of 11,000 lbs [4,989.5 kg]. HAS ready service ECMs used to support daily loading are limited to a maximum NEWQD of 22,000 lbs [9,979 kg] and a loading density of not more than 1.25 lbs/ft^3 [20 kg/m^3]. HAS ready service AGMs are limited to a maximum NEWQD of 22,000 lbs [9,979 kg].
c	Asset preservation is not provided between each HAS in a HAS pair. Flow-through HAS pairs are limited to a maximum NEWQD of 4,800 lbs [2,177.2 kg] in each HAS. HAS pairs with rear walls or with front and rear walls are limited to a maximum NEWQD of 2,390 lbs [1,084.1 kg] in each HAS. Asset preservation distances between a HAS pair and adjacent HASs and HAS ready service ECMs and AGMs must be in accordance with this table or Table **V4.E3.T5.** for the HAS designs involved.
d	A Korean TAB VEE HAS that has been modified to incorporate the hardened front closure of the first generation TAB VEE or TAB VEE modified HAS may be treated as a first generation HAS, provided the doors remain closed except for aircraft towing, fueling, servicing, run up, or taxi, and during integrated combat turnarounds or short periods when maintenance equipment or munitions are being moved into or out of the shelter.
e	These distances reflect K30 [K_m 11.9] equivalent protection (when doors are closed) for the aircraft. If this table or Table **V4.E3.T5.** is not applied for aircraft survivability, then provide ILD equivalent protection (3.5 psi [24 kPa]) to personnel.

Table V4.E3.T7. QD from a Third Generation HAS PES to an Unhardened ES[a, b, c, d]

NEWQD	Front	Sides	Rear
(lbs)	(ft)	(ft)	(ft)
[kg]	*[m]*	*[m]*	*[m]*
≤ 5.0[e]	50	50	50
< 2.3[e]	*15.2*	*15.2*	*15.2*
5 < NEWQD ≤ 500	230	50	50
2.3 < NEWQD < 226.8	*70.1*	*15.2*	*15.2*
500 < NEWQD ≤ 1,100	230	394	164
226.8 < NEWQD < 498.9	*70.1*	*120.1*	*50*
1,100 < NEWQD ≤ 11,000[f]	K50	K62	K40
498.9 < NEWQD ≤ 4,989.5[f]	*K_m 19.84*	*K_m 24.60*	*K_m 15.86*

a	This table may be applied to the front, sides, and rear of a second generation HAS, and to the sides of a Korean flow-through HAS, as allowed in accordance with paragraph **V4.E3.7.4.2.**; it may be applied to HAS pairs as allowed in accordance with paragraph **V4.E3.7.4.4.**
b	Separation distances are based on shelter doors remaining closed, except for aircraft towing, fueling, servicing, run-up, or taxiing and during integrated combat turnarounds or short periods when maintenance equipment or munitions are being moved into or out of the shelter. Where doors are left open for extended periods, normal CAPA criteria of Table **V4.E3.T1.** apply from the front. **(Added)(AF)** And per Tables **V3.E3.T17.**, **V3.E3.T18.**, and **V3.E3.T19.**
c	Separate AE from the HAS walls by a distance sufficient to prevent breaching. For less than 1,100 lbs [498.9 kg] NEWQD, a 3-ft [0.91-m] separation from the wall is sufficient.
d	These QD criteria apply to IBD, PTRD, and ILD exposures for quantities less than or equal to 1,100 lbs [498.9 kg] NEWQD.
e	The 50-ft [15.2-m] distance shown is not for QD purposes, but represents a minimum fire separation distance.
f	For quantities over 1,100 lbs [498.9 kg] but less than or equal to 11,000 lbs [4,989.5 kg] NEWQD, these QD only apply to IBD exposures. Use 50 percent of the IBD criteria for PTRD exposures with a 300-ft [91.4-m] minimum distance out the front or rear or a 394-ft [120.1-m] minimum distance off the sides. Use 35 percent of the IBD criteria for intraline exposures with a 300-ft [91.4-m] minimum distance out the front and rear or a 394-ft [120.1-m] minimum distance off the sides.

Table V4.E3.T8. QD from a First Generation HAS PES to an Unhardened ES[a, b, c, d]

NEWQD	Front	Sides	Rear
(lbs)	(ft)	(ft)	(ft)
[kg]	*[m]*	*[m]*	*[m]*
≤ 2.63[e]	50	50	50
< 1.19[e]	*15.2*	*15.2*	*15.2*
2.63 < NEWQD ≤ 263.8	230	50	50
1.19 < NEWQD < 119.6	*70.1*	*15.2*	*15.2*
263.8 < NEWQD ≤ 586.3	230	394	164
119.6 < NEWQD < 265.9	*70.1*	*120.1*	*50*
586.3 < NEWQD ≤ 5,863[f]	K50	K62	K40
265.9 < NEWQD ≤ 2,659.4[f]	*K_m 19.84*	*K_m 24.60*	*K_m 15.86*

a	This table may be applied to the front, sides, and rear of a first generation HAS, and to the sides and rear of a Korean TAB VEE HAS, as allowed in accordance with paragraph **V4.E3.7.4.3.**; it may be applied to HAS pairs as allowed in accordance with paragraph **V4.E3.7.4.4.**
b	Separation distances are based on shelter doors remaining closed, except for aircraft towing, fueling, servicing, run-up, or taxiing and during integrated combat turnarounds or short periods when maintenance equipment or munitions are being moved into or out of the shelter. Where doors are left open for extended periods, normal CAPA criteria of Table **V4.E3.T1.** apply from the front. **(Added)(AF)** (And per Tables **V3.E3.T17.**, **V3.E3.T18.**, and **V3.E3.T19.**)
c	Separate AE from the HAS walls by a distance sufficient to prevent breaching. For less than 1,100 lbs [498.9 kg] NEWQD, a 3-ft [0.91-m] separation from the wall is sufficient.
d	These QD criteria apply to IBD, PTRD, and ILD exposures for quantities less than or equal to 586.3 lbs [265.9 kg] NEWQD.
e	The 50-ft [15.2-m] distance shown is not for QD purposes, but represents a minimum fire separation distance.
f	For quantities over 586.3 lbs [265.9 kg] but less than or equal to 5,863 lbs [2,659.4 kg] NEWQD, these QD only apply to IBD exposures. Use 50 percent of the IBD criteria for PTRD exposures with a 300-ft [91.4-m] minimum distance out the front or rear or a 394-ft [120.1-m] minimum distance off the sides. Use 35 percent of the IBD criteria for intraline exposures with a 300-ft [91.4-m] minimum distance out the front and rear or a 394-ft [120.1-m] minimum distance off the sides.

V4.E3.8. HELICOPTER LANDING AREAS FOR AE OPERATIONS. Helicopter landing areas for loading and unloading AE within storage sites and quick reaction alert sites are considered AGMs and may be sited at IMD based only upon the NEWQD carried by the helicopter. Such helicopter landing areas must meet the following requirements:

V4.E3.8.1. Flight clearance criteria are met.

V4.E3.8.2. Landing and takeoff approaches are not over any AE facilities.

V4.E3.8.3. Helicopter operations are limited to AE support of the facilities concerned.

V4.E3.8.4. No passengers are carried.

V4.E3.8.5. During helicopter takeoff, landing, or loading or unloading, no AE operations are conducted at any PES located within IBD of the helicopter landing area. During landing or takeoff, PES doors must be closed.

V4.E3.8.6. Observe safety precautions normal to other modes of transportation.

VOLUME 4 – ENCLOSURE 4: PIERS AND WHARFS

V4.E4.1. SCOPE AND APPLICATION. These QDs are for HD 1.1 AE. If only AE of other HDs are involved, the applicable QD will be applied. This enclosure:

V4.E4.1.1. Applies to:

V4.E4.1.1.1. Ship and barge units, referred to in this enclosure as ships.

V4.E4.1.1.2. Piers, wharfs, and associated facilities where AE may be handled or may be present in ships' holds or conveyances.

V4.E4.1.1.3. Loading, off-loading, stowing, and shifting of AE from ships' magazines.

V4.E4.1.2. Does not apply to (i.e., no QD is required for):

V4.E4.1.2.1. AE in static storage in ships' magazines and intended for the service of shipboard armament or aircraft, provided the Secretary of the Military Department concerned formally accepts any explosives risk associated with such storage.

V4.E4.1.2.2. Handling less than or equal to 300 lbs [136.1 kg] NEW of combined HD 1.3 and HD 1.4 AE that are necessary for ship security and safety at sea.

V4.E4.1.2.3. Handling of security force ammunition issued to embarked security forces for designated missions.

V4.E4.2. DETERMINING THE QUANTITY OF EXPLOSIVES IN A SHIP

V4.E4.2.1. The NEWQD on board a ship is determined in accordance with section **V1.E7.2.**

V4.E4.2.2. When ships are separated by K11 [K_m 4.36] distances or greater, QD is based individually on the quantity of each ship. Lesser separation distances require that the AE in all ships be totaled.

V4.E4.3. MEASUREMENT OF SEPARATION DISTANCES

V4.E4.3.1. Moored Ships

V4.E4.3.1.1. Measurement of separation distances between ships or barges is from the nearest point of one ship's magazine (i.e., the PES) or the barge:

V4.E4.3.1.1.1. For IMD, to the nearest point of another ship's magazine or a barge.

V4.E4.3.1.1.2. For IBD and PTRD, to the nearest point of another ship or a barge.

V4.E4.3.1.2. Measurement of separation distances between ships or barges and shore ESs is from the nearest point of a ship's magazine or the barge to the nearest point of the ES.

V4.E4.3.2. Pier Operations. Measurement of separation distances from piers to surrounding facilities is from the nearest point that AE will be handled to the nearest point of an ES. Movement of railcars or trucks passing through the clear space between ships at a pier or between piers is considered an operational risk. It is generally impracticable to separate berths at a single pier by enough distance to prevent mass detonation of HD 1.1. When operationally feasible, schedule the number of such exposures and total time required to reduce exposure as much as possible.

V4.E4.3.3. Anchorages. Measurements from anchorages generally are from the boundary of the area designated for the explosives anchorage. The explosives anchorage for a single ship is a circle, the radius of which is the distance from the mooring buoy or a ship's anchor to the stern of the ship or of the AE lighters alongside when riding to the full scope of the chain. For an explosives anchorage, the separation distance to an ES will depend upon whether any ships are separated properly as described in paragraph **V4.E4.2.2.**

V4.E4.4. SITING CRITERIA AND APPLICATION OF QD

V4.E4.4.1. Maritime Prepositioning Ships (MPSs)

V4.E4.4.1.1. Reduced QD criteria may be applied to those MPSs that contain up to 1,300,000 lbs [589,667 kg] NEWQD of AE stored in standard International Standardization Organization (ISO) shipping containers.

V4.E4.4.1.2. IBD and PTRD for MPSs can be determined using K40.85 [K_m 16.21] with a 3,700-ft [1,128-m] minimum fragment distance for IBD and K24.01 [K_m 9.52] with a 2,220-ft [677-m] minimum fragment distance for PTRD for MPS loads where no more than 52 percent of the NEWQD is HD 1.1. When the percentage of HD 1.1 is:

V4.E4.4.1.2.1. Between 52 and 65 percent, use the IBD and PTRD columns of Table **V4.E4.T9.**

V4.E4.4.1.2.2. Above 65 percent, use the Other PES columns of Table **V3.E3.T1.** with a 3,700-ft [1,128-m] minimum fragment distance for IBD and a 2,220-ft [677-m] minimum fragment distance for PTRD.

Table V4.E4.T9. Variation of MPS QD Factors with Loadout

Percentage of HD 1.1	IBD[a]	PTRD[b]	Ship-to-Ship[c]
	(ft/1b$^{1/3}$)	(ft/1b$^{1/3}$)	(ft/1b$^{1/3}$)
	[m/kg$^{1/3}$]	*[m/kg$^{1/3}$]*	*[m/kg$^{1/3}$]*
up to 52	40.85	24.01	32.00
	16.21	*9.52*	*12.69*
53	40.97	24.08	32.10
	16.25	*9.55*	*12.73*
54	41.10	24.16	32.19
	16.30	*9.58*	*12.77*
55	41.22	24.23	32.29
	16.35	*9.61*	*12.81*
56	41.35	24.30	32.39
	16.40	*9.64*	*12.85*
57	41.47	24.37	32.48
	16.45	*9.67*	*12.88*
58	41.59	24.44	32.58
	16.50	*9.70*	*12.92*
59	41.71	24.52	32.67
	16.55	*9.73*	*12.96*
60	41.83	24.59	32.77
	16.59	*9.75*	*13.00*
61	41.95	24.66	32.86
	16.64	*9.78*	*13.04*
62	42.07	24.73	32.95
	16.69	*9.81*	*13.07*
63	42.19	24.80	33.05
	16.74	*9.84*	*13.11*
64	42.30	24.86	33.14
	16.78	*9.86*	*13.15*
65	42.42	24.93	33.23
	16.83	*9.89*	*13.18*

a	With a minimum fragment distance of 3,700 ft [1,128 m].
b	With a minimum fragment distance of 2,220 ft [677 m].
c	With a minimum fragment distance of 3,500 ft [1,067 m].

V4.E4.4.1.3. The QD between applicable MPS piers/anchorages and non-explosives loading piers/anchorages can be determined using K32 [K_m 12.69] with a 3,500-ft [1,067-m] minimum fragment distance for MPS loads, where no more than 52 percent of the total NEWQD is HD 1.1. (An exception for non-explosive MPSs is provided in paragraph **V4.E4.4.8.1.**) When the percentage of HD 1.1 is:

V4.E4.4.1.3.1. Between 52 and 65 percent, use the ship-to-ship column in Table **V4.E4.T9.**

V4.E4.4.1.3.2. Above 65 percent, use K40 [K_m 15.87] with a minimum fragment distance of 3,500 ft [1,067 m].

V4.E4.4.2. Scuttling Site. A properly located scuttling site will, when feasible, be provided for positioning a ship for its flooding or sinking in the event it catches fire and must be moved to avert damage to other ships or piers. The location of a scuttling site depends on the greatest NEWQD that may be in a single ship to be scuttled at any one time. (Figure **V4.E4.F2.** provides the applicable QD.) Additional considerations for the scuttling site include:

V4.E4.4.2.1. The site should have sufficient maneuvering room and depth to permit sinking the largest vessel that may be handled at the installation so that the holds will be flooded completely at low tide.

V4.E4.4.2.2. The scuttling site should provide the best available protection to other ships, piers, and shore installations in the event of a mass explosion.

V4.E4.4.3. Explosives Anchorages

V4.E4.4.3.1. Separation of Explosives Anchorages from Main Ship Channels. Explosives anchorage must be separated from the main ship channel and from normally traversed routes of ships entering or leaving the harbor by the following distances (occasional watercraft passing through the arcs, while outside both the main ship channel and normally traversed routes of ships entering and leaving the harbor, are not subject to QD requirements):

V4.E4.4.3.1.1. The PTRD from "Other PES" column of Table **V3.E3.T1.** (regardless of traffic density).

V4.E4.4.3.1.2. The turning circles and stopping distances of other ships passing the anchorage but not less than 3,000 ft [914.4 m].

V4.E4.4.3.2. Separation of Ships at Explosives Anchorages. When explosives anchorages are used for both loading and unloading ships and for mooring loaded ships, they must be separated as follows:

V4.E4.4.3.2.1. Loaded ships must be separated one from another by K18 [K_m 7.14].

V4.E4.4.3.2.2. Loading and unloading ships must be separated one from another by K11 [K_m 4.36] and, when possible, by K18 [K_m 7.14].

V4.E4.4.3.2.3. Loaded ships must be separated from ships loading and unloading by K40 [K_m 15.87].

V4.E4.4.3.3. Separation of Explosives Anchorages from Explosives Piers. Explosives anchorages must be separated from explosives piers by K40 [K_m 15.87] except when the anchorage is used only for the loading or unloading of ships. In that case, K18 [K_m 7.14] may be used.

V4.E4.4.4. Separation Distances of Ships at the Same Pier

V4.E4.4.4.1. Berthing of two ships in tandem helps decrease the fragment hazard to the AE cargo of the second ship because of the additional protection afforded by the bow or stern.

V4.E4.4.4.2. When two ships, which cannot be separated by K11 [K_m 4.36], are being loaded through all hatches at the same time, plan the spotting of railcars or trucks and the loading of hatches in both ships to put the greatest possible distance both between the open hatches and the trucks and railcars serving the two ships. When possible, stagger the loading of the ships.

V4.E4.4.5. Separation of Wharf Yard from the Pier. A wharf yard must be separated from the pier, which it serves, by K11 [K_m 4.36] to prevent propagation. If this separation distance cannot be met, then the wharf yard is considered part of the ship or barge and added to it for computation of the total amount of explosives for QD purposes.

V4.E4.4.6. Separation of Explosives Ships from Other Ships. Separate explosives ships being loaded or unloaded from non-explosives carrying ships and from loaded explosives ships that are not underway by K40 [K_m 15.87] distances. Use the PTRD from "Other PES" column of Table **V3.E3.T1.** for protection of ships that are underway.

V4.E4.4.7. Barge Piers and Anchorages

V4.E4.4.7.1. Barge Piers. Piers and wharfs used exclusively for loading or unloading AE on barges or utility craft (i.e., barge piers) must be sited at IMD from all other PESs (to include from another barge pier or a barge anchorage). As a PES, site barge piers and anchorages in accordance with Figure **V4.E4.F2.**

V4.E4.4.7.2. Barge Anchorages. Anchorages used only to moor AE-loaded barges and where AE loading or unloading is not permitted (i.e., barge anchorages) must be sited at IMD from all other PESs (to include from another barge anchorage or a barge pier). As a PES, site barge anchorages in accordance with Figure **V4.E4.F2.** See paragraph **V4.E4.4.3.** for criteria to apply to anchorages used for AE loading or unloading.

V4.E4.4.8. Separation of Pre-positioning Program Ships at Anchorages. The Military Sealift Command's Pre-positioning Program (i.e., Combat Pre-positioning Force, Maritime Pre-positioning Force, Logistics Pre-positioning Ships) operates both explosives-loaded and non-explosives carrying ships that are then deployed to key locations around the world. These ships are pre-loaded with military equipment and supplies necessary to support military forces on a short-notice basis and thus support a common mission. The following criteria apply to Pre-positioning Program ships at anchorage:

V4.E4.4.8.1. Separate non-explosives carrying ships from explosives-loaded ships by a minimum of K18 [K_m 7.14].

V4.E4.4.8.2. Separate non-explosives carrying ships from non-Pre-positioning Program explosives-loaded ships by K40 [K_m 15.87].

V4.E4.4.8.3. Separate non-explosives carrying ships not associated with the Pre-positioning Program from all explosives carrying ships by K40 [K_m 15.87].

V4.E4.4.8.4. Separate all non-explosives carrying ships from explosives ships being loaded or unloaded by K40 [K_m 15.87].

V4.E4.5. QD TABLES

V4.E4.5.1. Figure **V4.E4.F2.** illustrates required hazard factors. Table **V3.E3.T8.** provides the corresponding separation distances.

V4.E4.5.2. Table **V3.E3.T1.** separation distances must be maintained between explosives pier and wharf facilities and other ESs (e.g., administration and industrial areas, terminal boundaries, main ship channels, and PTRs).

V4.E4.5.3. As an ES, ships must be separated from AE operating and storage facilities (including holding yards) by the appropriate IBD column of Table **V3.E3.T1.**

V4.E4.5.4. As a PES, ships must be separated from AE operating facilities by either the barricaded IMD (K6 [K_m 2.38]) or unbarricaded IMD (K11 [K_m 4.36]), as applicable. An exception as described in paragraph **V3.E3.1.1.2.1.10.** is permitted when the ES is a container stuffing and unstuffing operation that routinely supports AE ship loading and unloading operations. QD requirements of paragraph **V4.E4.5.3.** apply from such container stuffing and unstuffing operations (as a PES) to an AE ship (as an ES).

V4.E4.6. GENERAL CARGO AND VEHICLES AT AE TERMINALS

V4.E4.6.1. Concurrent movements of mission-related general cargo, vehicles, and AE through a terminal may be conducted for the purpose of loading or unloading the same ship.

V4.E4.6.2. Concurrent operations involving other ships will be conducted at applicable QD separations. (See Figure **V4.E4.F2.**)

V4.E4.6.3. Separation of inert materials and equipment in holding areas must be consistent with section **V4.E5.4.**

V4.E4.6.3.1. Limit the number and time of exposure of personnel entering inert holding areas that are located within explosives safety QDs.

V4.E4.6.3.2. Any labor intensive activity must take place at IBD or PTRD, as applicable.

Figure V4.E4.F2. Application of Separation Distances for Ship or Barge

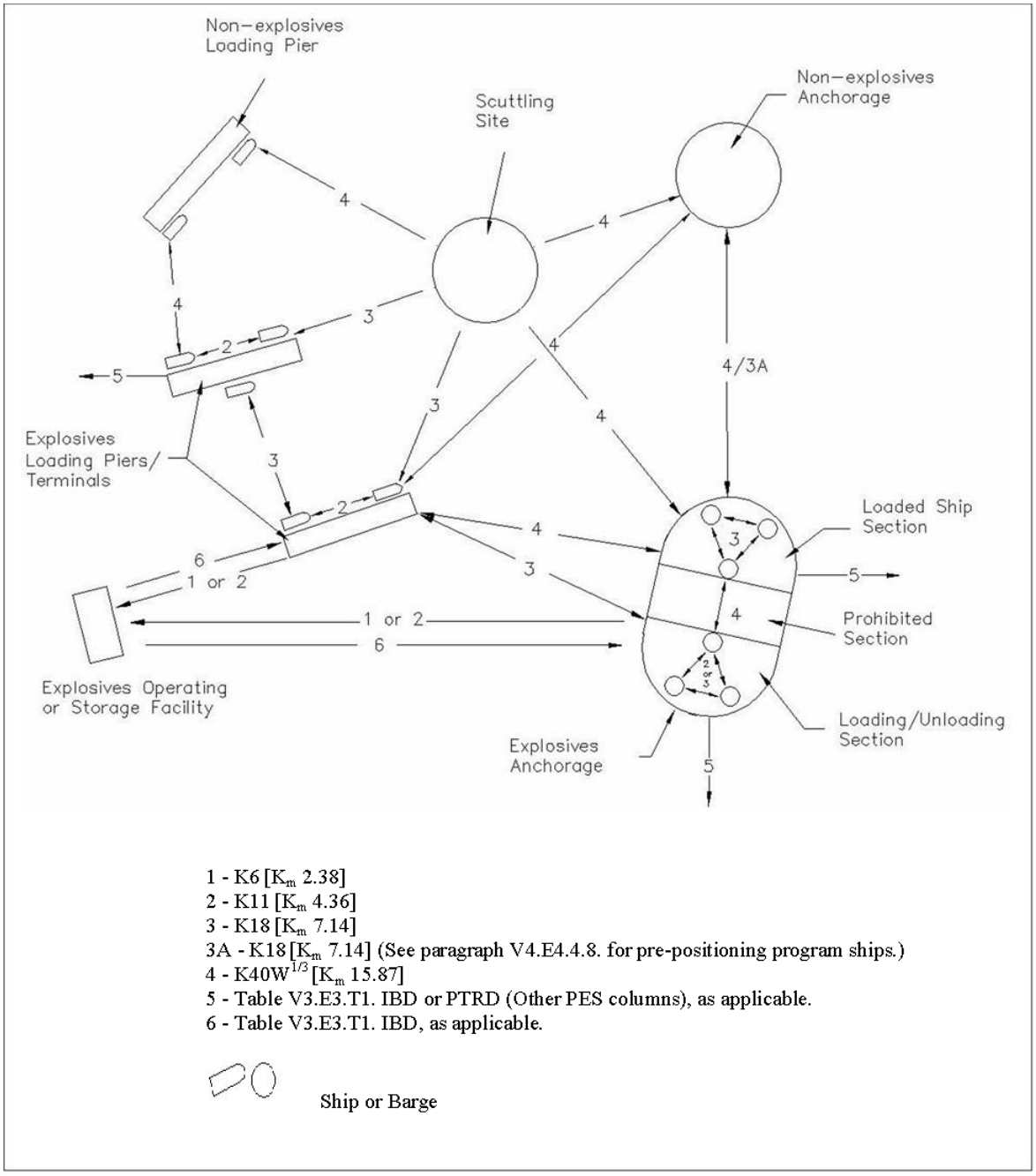

VOLUME 4 – ENCLOSURE 5: SPECIFIC FACILITIES

V4.E5.1. SCOPE AND APPLICATION. This enclosure establishes criteria for siting specific AE and non-AE facilities with respect to PESs.

V4.E5.2. ADMINISTRATION AND INDUSTRIAL AREAS AND AUXILIARY FACILITIES

V4.E5.2.1. Administration and industrial areas must be separated from a PES by IBD.

V4.E5.2.2. Auxiliary facilities (e.g., heating plants, line offices, break areas, briefing rooms for daily work schedules or site safety matters, joiner shops, security posts, and similar functions) located at or near AE operations and servicing only one building or operation may be located at fire protection distance (50 ft [15.2 m] for non-combustible structures, 100 ft [30.5 m] for combustible structures) from the building or operation they support.

V4.E5.2.3. Security response facilities that support response force personnel meeting DoD S-5210.41-M-V1 mission requirements, and are hardened against small arms fire, require no QD separation from the PESs they support.

V4.E5.2.4. Structures necessary for providing personnel or equipment weather protection (including provision of power for such equipment) located at a PES sited at IMD from other PESs (e.g., holding yards, detached loading docks, barge piers), and that support a single PES or operation, may be located at that PES without application of QD separation from any other PES. These structures must meet electrical and lightning protection standards of **Volume 2 – Enclosure 3** and **Volume 2 – Enclosure 4**, as appropriate. These structures require explosives safety site plan approval.

V4.E5.3. CLASSIFICATION YARD

V4.E5.3. **(Added)(AF)** Where the volume of vehicle or rail traffic necessitates, establish a classification yard primarily for receiving, classifying, switching, and dispatching explosives-laden vehicles and railcars.

V4.E5.3.1. For protection of the classification yard from a PES, separation distances must be at least the applicable IMD.

V4.E5.3.2. Specific QD separation is not required from the classification yard to ESs when the classification yard is used exclusively for:

V4.E5.3.2.1. Receiving, dispatching, classifying, and switching of cars.

V4.E5.3.2.2. Interchanging trucks, trailers, or railcars between the common carrier and the DoD activity.

V4.E5.3.2.3. Conducting external inspection of motor vehicles or railcars, or opening of free-rolling doors of railcars to remove documents and make a visual inspection of the cargo.

V4.E5.3.2.3. **(Added)(AF)** Freeing or repairing a stuck or damaged door or doing any work inside a car is prohibited unless QD requirements can be met. **(T-1).**

V4.E5.3.3. Apply specific QD separation if the classification yard is used for any other purpose.

V4.E5.4. INERT STORAGE. Locations for inert storage will be determined only after consideration of personnel exposure, the importance of the materiel in relation to the explosives mission, the operational conditions, and the availability of space.

V4.E5.4.1. The DoD Components must determine acceptable locations for inert storage that is directly related to the explosives mission, and for inert storage that is not directly related but where control of and access to such inert storage is restricted only to personnel directly related to the explosives mission. The DoD Components must determine what constitutes "directly related." Site plans meeting these conditions are not required to be submitted to the DDESB for review and approval as addressed in paragraph **V1.E5.3.8.**

V4.E5.4.2. Inert storage that will be accessed by personnel not related to the explosives mission must be sited in accordance with paragraphs **V3.E3.1.1.4.7.** and **V3.E3.1.1.6.9.** (based on blast only). Minimum fragment distances do not apply as addressed in paragraph **V3.E3.1.2.1.3.4.**

V4.E5.4.3. **(Added)(AF)** May be located at fire protection distance from all related PESs (100 feet if the PES structure is combustible; 50 feet if the PES structure is non-combustible).

V4.E5.4.4. **(Added)(AF)** Site unoccupied inert storage not directly related to the explosives mission and when accessed by personnel not directly related to the explosives mission as a PTR exposure per Tables **V3.E3.T17.**, **V3.E3.T18.,** and **V3.E3.T19.**, when located in the open (no structure involved). Base the PTRD on blast overpressure only and do not use fragment distances. Minimum fire protection distances given in paragraph **V4.E5.4.** apply.

V4.E5.4.5. **(Added)(AF)** Site unoccupied inert storage not directly related to the explosives mission and when accessed by personnel not directly related to the explosives mission as an inhabited building per Tables **V3.E3.T17.**, **V3.E3.T18.**, and **V3.E3.T19.**, when located in a structure. Base the IBD on blast overpressure only and do not use fragment distances. Minimum fire protection distances given in paragraph **V4.E5.4.** apply.

V4.E5.4.6. **(Added)(AF)** Site occupied inert storage facilities (e.g., warehouses) supporting the explosives mission as related facilities per Tables **V3.E3.T17.**, **V3.E3.T18.**, and **V3.E3.T19.**

V4.E5.4.7. **(Added)(AF)** Site occupied inert storage facilities (e.g., warehouses) not supporting the explosives mission as inhabited buildings per Tables **V3.E3.T17.**, **V3.E3.T18.**, and **V3.E3.T19.**

V4.E5.4.8. **(Added)(AF)** Site related non-munitions war reserve material (WRM) storage at ILD from all PESs. Use PTRD or IBD, when possible, to prevent unacceptable damage to critical war support assets. See paragraphs **V4.E5.4.4.** and **V4.E5.4.5.** for non-related unoccupied non-munitions WRM storage.

V4.E5.4.9. (Added)(AF) Protective Shielding and Remotely Controlled Operations. For operations requiring protective shielding or remote control per paragraph **V1.E9.3.2.**, see paragraph **V1.E6.30.** for operating requirements and apply the following QD separations:

V4.E5.4.9.1. **(Added)(AF)** As an ES, treat as an operating location per Tables **V3.E3.T17.**, **V3.E3.T18.**, and **V3.E3.T19.**

V4.E5.4.9.2. **(Added)(AF)** As a PES:

V4.E5.4.9.2.1. **(Added)(AF)** Provide K24 to related personnel; any distance less than K24 requires the application of paragraph **V1.E9.3.2.**

V4.E5.4.9.2.2. **(Added)(AF)** Provide IBD to non-related personnel.

V4.E5.4.9.2.3. **(Added)(AF)** Treat as an operating location per Tables **V3.E3.T17.**, **V3.E3.T18.**, and **V3.E3.T19.**, for protection of unoccupied ESs; use of Table **V3.E3.T17.**, Note 21 is not allowed.

V4.E5.5. INTERCHANGE YARDS

V4.E5.5.1. Truck, trailer, or railcar interchange yards are not subject to QD requirements, when used exclusively:

V4.E5.5.1. **(Added)(AF)** Locate these interchange yards as far as practical from other hazards (e.g., explosives, POL), populated areas, and flightlines, and promptly remove the AE conveyance.

V4.E5.5.1.1. For the interchange of vehicles or railcars containing AE between the commercial carrier and DoD activities.

V4.E5.5.1.2. To conduct external inspection of the trucks, trailers, or railcars containing AE.

V4.E5.5.1.3. To conduct visual inspection of the external condition of the cargo in vehicles (e.g., trucks, trailers, and railcars) that passed the external inspection.

V4.E5.5.2. Truck, trailer, or railcar interchange used, at any time, for any purpose other than those listed in paragraphs **V4.E5.5.1.1.** through **V4.E5.5.1.3.** are subject to applicable QD tables (see paragraph **V1.E7.4.3.** for QD measurements for AE conveyances).

V4.E5.6. INTER-DoD COMPONENT SUPPORT AND TACTICAL FACILITIES

V4.E5.6.1. General

V4.E5.6.1.1. The separation distances in paragraph **V4.E5.6.2.** apply between facilities of one DoD Component to those of another DoD Component regardless of the location of the boundaries.

V4.E5.6.1.2. Other safety criteria (e.g., toxicity, noise, radiation, flight trajectory) may require greater distances. In these situations, the predominant hazard criteria apply.

V4.E5.6.2. Minimum QD Relationships. The following minimum QD relationships apply:

V4.E5.6.2.1. AE storage facilities must be separated by IMD.

V4.E5.6.2.2. AE storage or operating locations of one DoD Component must be separated from AE operating locations of another DoD Component by IBD. (See paragraph **V4.E5.6.2.3.** for an exception to this criterion.)

V4.E5.6.2.3. Explosive operations that present a similar degree of hazard or involve joint or support operations must be separated by ILD.

V4.E5.6.2.4. AE storage or operating locations of one DoD Component must be separated from AE tactical facilities of another DoD Component by IBD. For joint or support operations, determine the separation distance as though both facilities belonged to a single DoD Component.

V4.E5.7. DETACHED LOADING DOCKS. Detached loading docks that service multiple facilities must be sited based on use with regard to the facilities serviced. They must be sited as AGMs with regard to all other facilities.

V4.E5.7.1. When servicing magazines, such docks must be separated from magazines by IMD based only on the explosives limit of the loading dock.

V4.E5.7.2. When servicing operating buildings, such docks must be separated from the operating buildings by ILD based only on the explosives limit of the loading dock.

V4.E5.7.3. **(Added)(AF)** Loading docks that support a single PES do not require QD separation from the supported PES.

V4.E5.8. HOLDING YARDS FOR RAILCARS AND TRUCKS CONTAINING AE

V4.E5.8.1. Railcar groups containing AE must be separated from each other by AGM distance in a railcar-holding yard. For example:

V4.E5.8.1. **(Added)(AF)** Site vehicle and rail holding yards as AGM per Tables **V3.E3.T17., V3.E3.T18.**, and **V3.E3.T19.**

V4.E5.8.1.1. If the railcar-holding yard is formed by two parallel ladder tracks connected by diagonal spurs, the parallel tracks and the diagonal spurs must be separated by AGM distance for the quantities of AE involved.

V4.E5.8.1.2. If the railcar-holding yard is a "Christmas tree" arrangement, consisting of a ladder track with diagonal dead-end spurs projecting from each side at alternate intervals, the spurs must be separated by AGM distance for the quantities of AE involved.

V4.E5.8.1.3. **(Added)(AF)** Where possible, separate explosives-loaded vehicles and railcars from each other by the applicable IMD. Distances to other exposures are then based on the vehicle and railcar with the largest NEWQD.

V4.E5.8.1.4. **(Added)(AF)** If IMD between vehicles and railcars cannot be met, park vehicles and railcars in groups, with IMD between each group. Base distances to other exposures on the total amount of explosives within the group of vehicles or railcars with the largest NEWQD.

V4.E5.8.1.5. **(Added)(AF)** Where paragraph **V4.E5.8.1.3.** or **V4.E5.8.1.4.** above is not possible, use the total NEWQD of all vehicles or railcars to determine separation distances.

V4.E5.8.2. Truck groups containing AE in holding yards must be separated from each other by AGM distance.

V4.E5.8.3. Railcar- and truck-holding yards containing AE must be separated from other facilities by the applicable IBD, PTRD, ILD, or IMD.

V4.E5.8.4. In addition to the temporary parking of railcars, trucks, or trailers containing AE, holding yards may be used to interchange truck, trailers, or railcars between the commercial carrier and the DoD activity, and also to conduct visual inspections.

V4.E5.9. INSPECTION STATIONS FOR RAILCARS AND TRUCKS CONTAINING AE

V4.E5.9.1. Inspection stations for railcars and trucks containing AE that are used exclusively for the activities listed in paragraphs **V4.E5.9.1.1.** through **V4.E5.9.1.3.** are not subject to QD criteria. However, these stations should be located as far as practical from other hazards or populated areas. Allowable activities are:

V4.E5.9.1.1. External visual inspection of the railcars or motor vehicles.

V4.E5.9.1.2. Visual inspection of the external condition of the cargo packaging in vehicles that have passed the external inspection indicated in paragraph **V4.E5.9.1.1.**

V4.E5.9.1.3. Interchange of trucks, trailers, or railcars between the common carrier and the DoD activity.

V4.E5.9.2. Inspection stations used for any other purpose must comply with applicable QD criteria.

V4.E5.10. HOLDING AREAS FOR SUSPECT RAILCARS OR TRUCKS CONTAINING AE. Separate (isolate) railcars or trucks that are suspected of being in a hazardous condition from other PESs or ESs by the applicable QD before any other action.

V4.E5.11. AE TRANSPORTATION MODE CHANGE LOCATIONS. Movement and transfer of DoD-titled AE must comply with national, international, and host-country-specific transportation regulations. QD criteria apply to all transfer operations involving DoD-titled AE, except RO/RO operations that meet these requirements:

V4.E5.11.1. If a sited location is available, it must be used. If a sited location is not available, then the location selected must be as remote as practicable from populated areas to minimize exposure of unrelated personnel.

V4.E5.11.2. The total NEWQD present must not exceed 30,000 lbs.

V4.E5.11.3. All AE present (e.g., trailers, trucks, barges) must be associated only with the RO/RO operation being conducted.

V4.E5.11.4. AE should be located on-site for the minimum time necessary, but the operations must not exceed 24 hours following arrival of the AE.

V4.E5.11.5. **(Added)(AF)** Site transportation mode change locations as operating locations per Tables **V3.E3.T17., V3.E3.T18.**, and **V3.E3.T19.**

V4.E5.12. SECURE HOLDING AREA. A secure holding area is an area designated for the temporary parking of commercial carriers' motor vehicles transporting DoD-owned arms, ammunition, and explosives; classified (SECRET or CONFIDENTIAL) materials; and controlled cryptographic items. Criteria for each of the two types of secure holding areas are in paragraphs **V4.E5.12.1.** and **V4.E5.12.2.** Although the intent of such areas is to provide a secure storage location for commercial carriers while in transit or during emergencies or other circumstances that are beyond a carrier's control, this manual imposes no requirement for installations to have secure holding areas (see DoDM 5100.76 for installation secure hold responsibilities). Secure holding areas are applicable to areas (continental United States, Hawaii, Alaska, and Puerto Rico) governed by Defense Transportation Regulation 4500.9-R-Part II.

V4.E5.12.1. Secure Explosives Holding Area. Site as a holding yard in accordance with section **V4.E5.8.**

V4.E5.12.2. Secure Non-explosives Holding Area. No siting is required if located outside all QD arcs. If located within a QD arc, site as an administrative parking lot in accordance with paragraph **V3.E3.1.1.4.6.** The holding of HD 1.4S materials, without regard to QD, is permitted at this location.

V4.E5.12.3. **(Added)(AF)** Installations must site secure holding areas to meet known taskings. **(T-1).**

V4.E5.12.4. **(Added)(AF)** See section **V1.E3.6.** when there is no secure holding area sited for the NEWQD or HD of the vehicle for unforeseen taskings.

V4.E5.13. STORAGE TANKS FOR HAZARDOUS MATERIALS

V4.E5.13.1. Unprotected, aboveground bulk storage tanks must be separated from PESs by IBD in accordance with Table **V3.E3.T1.** A dike system satisfying NFPA 30 is required. Aboveground storage tanks that are provided protection against rupture or collapse from blast and fragment hazards may be sited at distances less than Table **V3.E3.T1.** when supported by testing or analysis.

V4.E5.13.1. **(Added)(AF)** For Air Force personnel, unprotected, aboveground bulk storage tanks are > 5,000 gallons.

V4.E5.13.2. For installation of smaller bulk storage tanks, weigh the cost of distance or protective construction against the strategic value of the stored material, the ease of replacement in the event of an accident, and the potential environmental impact. Reduced distances may be approved if:

V4.E5.13.2.1. The DoD Component accepts the losses.

V4.E5.13.2.2. The tanks are sited.

V4.E5.13.2.3. Other exposures are not endangered because spill containment is provided.

V4.E5.13.3. Unprotected service tanks solely supporting AE storage or operating complexes that are supplied by a pipe system designed to resist blast and fragments may be sited at IBD based on blast only with a minimum distance of 400 ft [121.9 m] if:

V4.E5.13.3.1. A dike system meeting the requirements of NFPA 30 is provided.

V4.E5.13.3.2. The DoD Component accepts the possible loss of the tanks and any collateral damage that a fire might cause as a result of the tanks being punctured by fragments.

V4.E5.13.3.3. **(Added)(AF)** Equip aboveground lines, if used, with automatic shut-off valves at the source. **(T-1).**

V4.E5.13.4. No QD separation is required from any PES to a service tank (above or below ground) that supports a single PES or ES. Such tanks must comply with applicable fire protection distances.

V4.E5.13.5. Buried tanks (except service tanks in accordance with paragraph **V4.E5.13.4.**) and buried pipelines should be separated from all PESs containing HD 1.2, HD 1.3, HD 1.4, or HD 1.6 AE by at least 80 ft [24.4 m]. The required separation distance for HD 1.1 or HD 1.5 AE is K3 [K_m 1.19] with a minimum of 80 ft [24.4 m]. If the PES is designed to contain the effects of an explosion, then no QD is required.

V4.E5.13.5.1. **(Added)(AF)** Keep pumps and pump houses serving underground POL at least 50 feet from all PESs. **(T-1).** If the PES is designed to contain the effects of an explosion, then no QD is required.

V4.E5.13.5.2. **(Added)(AF)** Consider cut and cover POL tanks as underground if they have at least three feet of earth cover (five feet is recommended if the PES exposing the tank could generate large secondary debris fragments) are sited at K3. Unmanned cut and cover support facilities require ILD from all PESs.

V4.E5.13.6. Small quantities of petroleum, oils, and lubricants or other hazardous materials used for operational purposes require no specific separation distance for explosives safety; however, operating procedures must be implemented to limit adverse environmental impacts in the event of an accidental explosion.

V4.E5.13.6. **(Added)(AF)** Separate these materials as required by NFPA 30, or by 50 feet, whichever is greater. An example of this facility type would be small lockers used to store operational quantities of POL and other flammable materials in support of a single PES or ES. This criteria does not apply to small daily use storage lockers located in operating environments.

V4.E5.13.7. For underground AE facilities, it is not practical to specify QD criteria that cover all tank storage configurations. The DoD Component must assess each configuration in accordance with **Volume 5 – Enclosure 5** of this manual to ensure that protection equivalent to paragraphs **V4.E5.13.1.** through **V4.E5.13.6.** is provided.

V4.E5.13.8. **(Added)(AF)** Exempt the following from QD requirements:

V4.E5.13.8.1. **(Added)(AF)** Explosives loaded aircraft to POL hydrants set on the flightline flush with the pavement and associated lines.

V4.E5.13.8.2. **(Added)(AF)** AE to in use material-handling equipment.

V4.E5.13.8.3. **(Added)(AF)** Licensed locations to POL facilities.

V4.E5.13.9. **(Added)(AF)** Separate railroad tank car and transfer points or operations, tank trucks, POL transmission pipelines, and hydrants from all PESs by IBD. Separate fuel truck transfer points or operations by PTRD, with no minimum fragment distance, if the trucks are limited to less than 48 hours at the location.

V4.E5.13.10. **(Added)(AF)** Separate parking lots for fuel service trucks by ILD with a minimum of 100 feet from related PESs, and IBD from unrelated PESs.

V4.E5.13.11. **(Added)(AF)** Site fixed refueling points at ILD with a 100-foot minimum from all related PESs (e.g., a remote, unmanned self-service station commonly located in an MSA or flightline Aerospace Ground Equipment (AGE) shop).

V4.E5.13.12. **(Added)(AF)** Maintain at least 100 feet between explosives and any mobile petroleum dispensing unit operating in an explosives area. Exception: Less than 100 feet is permitted where a shorter distance is needed during transfer to an underground tank located at less than 100 feet, or where needed to refuel a mobile explosives transporter with the explosives load onboard.

V4.E5.14. STORAGE TANKS FOR WATER

V4.E5.14.1. Unprotected aboveground water storage tanks must meet the siting requirements of paragraph **V4.E5.13.1.** if loss of the tank is unacceptable to the DoD Component. Buried tanks and associated components of like value must meet the siting requirements of paragraph **V4.E5.13.5.** Aboveground storage tanks that are protected against rupture or collapse from blast and fragment hazards may be sited at distances less than Table **V3.E3.T1.** when supported by testing or analysis. No dike is required.

V4.E5.14.2. QD criteria do not apply to water storage tanks and associated components if loss is acceptable to the DoD Component.

V4.E5.14.3. **(Added)(AF)** QD criteria do not apply if loss is acceptable to the responsible commander.

V4.E5.15. UNDERGROUND TANKS OR PIPELINES FOR NON-HAZARDOUS MATERIALS.

Apply the criteria of paragraph **V4.E5.13.5.**

V4.E5.16. TEMPORARY CONSTRUCTION OR MAINTENANCE OPERATIONS.

Construction and maintenance personnel who are temporarily near a PES to perform their job must be provided the maximum practicable protection from the effects of an explosion if one occurs at a PES. The DoD Component must determine the minimum practicable separation distance from PESs for such personnel and control operations at the PES to minimize exposure of these personnel to hazards from an explosion. Documentation of the rationale for the control measures taken must be maintained until construction or maintenance operations are completed.

V4.E5.16.1. (Added)(AF) Removal of Explosives. Supervisory and weapons safety personnel will determine, based on a risk assessment, whether explosives must be removed prior to performing maintenance and repair of explosives facilities, or maintenance and repair of equipment in explosives facilities (see section **V1.E9.2.**). **(T-1).**

V4.E5.16.1.1. **(Added)(AF)** Only perform maintenance and repair in an ECM's interior containing bulk explosives if the explosives are physically protected and a risk assessment shows that explosive hazards can be adequately controlled (see **V1.E9.2.**).

V4.E5.16.2. (Added)(AF) Requirements for Maintenance and Repair With Explosives Present.

V4.E5.16.2.1. **(Added)(AF)** Brief maintenance personnel on the hazards involved and precautions needed to perform the work safely, and actions to take in the event of an accident. **(T-1).** This includes self-help projects.

V4.E5.16.2.2. **(Added)(AF)** If hazards warrant, trained weapons safety personnel must monitor repair activities for safety. The monitor will halt repair activities when, in their opinion, hazards are being created. **(T-1).** The senior supervisor of the facility will resolve the problem before resuming operations. **(T-1).**

V4.E5.16.2.3. **(Added)(AF)** Keep floors clean and free of extraneous materials and equipment in the immediate area.

V4.E5.16.2.4. **(Added)(AF)** Hot Work.

V4.E5.16.2.4.1. **(Added)(AF)** Do not use flame or heat-producing equipment inside the facility unless facility contents are protected from the flame, sparks, and heat by physical separation or shielding. **(T-1).**

V4.E5.16.2.4.2. **(Added)(AF)** Keep flame or heat-producing equipment outside the facility as far as practicable from all explosives (to include explosives in nearby facilities). When needed, use baffles and screens to confine sparks and flames.

V4.E5.16.2.4.3. **(Added)(AF)** Meet requirements of AFMAN 91-203.

V4.E5.16.2.4.4. **(Added)(AF)** Notify the fire department before work begins. **(T-1).**

V4.E5.16.2.4.5. **(Added)(AF)** Ensure RF hazards presented by maintenance and repair operations are evaluated and controlled IAW AFI 91-208.

V4.E5.16.3. (Added)(AF) Maintenance of Explosives Facilities.

V4.E5.16.3.1. **(Added)(AF)** Periodically check ventilators to ensure they function properly. Ventilators may be closed where blowing snow or humid air would increase condensation. They may also be closed to protect supplies from blowing sand. Set up controls to make sure heat does not build up within the storage space.

V4.E5.16.3.2. **(Added)(AF)** Periodically check fusible links to ensure they are unpainted, serviceable, properly installed, and temperature-rated per paragraph **V5.E3.1.2.4.2.**

V4.E5.16.4. (Added)(AF) Maintenance and Repair in Hazardous Locations. Before beginning maintenance and repair in a hazardous location, a weapons safety representative will ensure the area is inspected for the presence of explosives residue. Maintenance personnel must provide for the removal of all hazardous materials, to include removal of all explosive residue material from equipment, crevices beneath floors, within walls and pipes, and under fittings where explosives may have collected and thoroughly wash down the area.

V4.E5.16.5. (Added)(AF) Maintenance and Repair of Hazardous Location Equipment and Electrical Installations. Extraordinary care will be taken in the maintenance and repair of equipment and electrical installations in hazardous locations.

V4.E5.16.5.1. **(Added)(AF)** Equipment and electrical installations must be periodically inspected and maintained by qualified personnel, with a written record kept of the inspections and maintenance. **(T-1).** Where inspection frequency is not prescribed in a TO, technical manual (TM), or other directive, the inspection period will be decided by the local fire chief on the basis of the existing situation. **(T-1).**

V4.E5.16.5.2 **(Added)(AF)** Before repairs are allowed on any equipment or electrical installation that has been exposed to explosive residue contamination, clean the equipment and tag it. The operating supervisor must sign the tag, certifying that all explosives have been removed. **(T-1).** If it has been impossible to clean some part, note this on the tag, together with clear instructions to maintenance personnel on how to handle it safely.

V4.E5.16.6. (Added)(AF) Maintenance and Repair of Electrical Equipment. Only qualified persons are authorized to maintain and repair electrical equipment. Where the equipment may have been exposed to explosives contamination, the explosives will be removed or neutralized before repairs are started.

V4.E5.16.7. (Added)(AF) Post-Maintenance and Repair of Explosives Facilities and Equipment.

V4.E5.16.7.1. **(Added)(AF)** Inspect the facility after completion of the work to ensure it is safe for resumption of explosives storage or operations. **(T-1).**

V4.E5.16.7.2. **(Added)(AF)** Examine and test newly repaired equipment to ensure its safe operating condition before resuming use of the equipment. **(T-1).**

V4.E5.17. MILITARY WORKING DOG (MWD) EXPLOSIVES SEARCH TRAINING.

MWD training involves searches to detect explosives that have been hidden in various public places. These training operations typically include handling explosives, cutting or dividing explosive training aids, removing explosives from shipping and storage containers, and repackaging explosives into other containers. For these reasons, training operations must:

V4.E5.17.1. Be conducted by personnel meeting the DoD Component qualifications.

V4.E5.17.2. Be conducted in facilities that meet the requirements of this manual.

V4.E5.17.3. Store explosives in facilities that meet the requirements of this manual.

V4.E5.17.4. Provide non-essential personnel:

V4.E5.17.4.1. K40 [K_m 15.87] separation distance from the training site if an NEWQD of more than 15 lbs [6.8 kg] is being used for the exercise.

V4.E5.17.4.2. 100-ft [30.5-m] separation distance from the training site for an NEWQD equal to or less than 15 lbs [6.8 kg].

V4.E5.17.5. Minimize the number of samples and the quantity of explosives for each sample. The DoD Component must determine the total quantity of explosives permitted during an exercise considering:

V4.E5.17.5.1. The value and importance of the exposed facilities.

V4.E5.17.5.2. The exercise operating conditions.

V4.E5.17.5.3. The available separation distance for non-essential personnel.

V4.E5.17.6. Separate samples a sufficient distance apart to prevent an explosion from propagating from one sample to another.

V4.E5.17.7. Not use any initiating devices or initiating explosives.

V4.E5.17.8. Not place explosives near any heat or spark producing items (e.g., bare electrical wiring, radiators, electric heaters, heating vents).

V4.E5.17.9. Not place explosives in metal containers or other means of confinement that could produce fragments in the event of an accidental explosion.

V4.E5.18. DEMILITARIZATION PROCESSING EQUIPMENT AND OPERATIONS FOR EXPENDED .50-CALIBER AND SMALLER CARTRIDGE CASINGS

V4.E5.18.1. A demilitarization operation for processing expended .50-caliber and smaller cartridge cases can be treated as a non-explosive operation provided:

V4.E5.18.1.1. Cartridge casings to be processed are screened prior to processing. Screening is intended to ensure that only .50-caliber and smaller are processed, and to remove unused .50-caliber and smaller cartridges.

V4.E5.18.1.2. Demilitarization processing equipment is tested to be capable of containing overpressure, fragment, and thermal hazards associated with a worst-case reaction involving a single live round of the most energetic cartridge that could be processed in the equipment.

V4.E5.18.1.3. Demilitarization processing equipment is operated within the manufacturer's specifications and restricted only to the processing of expended .50-caliber and smaller cartridge casings.

V4.E5.18.1.4. Demilitarization processing equipment is inspected and maintained to ensure safe operation.

V4.E5.18.2. The DoD Components must:

V4.E5.18.2. **(Added)(AF)** MAJCOMs will:

V4.E5.18.2.1. Approve the use of specific demilitarization processing equipment.

V4.E5.18.2.2. Establish and implement procedures for:

V4.E5.18.2.2.1. Screening and segregating the material to be processed.

V4.E5.18.2.2.2. Operating, inspecting, and maintaining the demilitarization processing equipment to ensure safe operation.

V4.E5.18.2.2.3. Dispositioning of processed material.

V4.E5.18.3. Explosives safety siting requirements are:

V4.E5.18.3.1. Demilitarization processing operation locations meeting the requirements of paragraphs **V4.E5.18.1.** and **V4.E5.18.2.**, and located outside of IBD from all PESs, do not require submission of a site plan to the DDESB as addressed in paragraph **V1.E5.3.9.**

V4.E5.18.3.2. Locations used for demilitarization processing operations that are located within IBD arcs:

V4.E5.18.3.2.1. Require submission of a site plan to the DDESB.

V4.E5.18.3.2.2. Must be sited at ILD, except from the PES to which it is integral.

V4.E5.19. CONVEYANCE LOADING AND UNLOADING AT A MAGAZINE. A conveyance (e.g., truck, trailer, railcar, ISO, or military van container) loading and unloading operation is permitted at a magazine without regard to QD between the magazine and the operation. "At a magazine" means loading and unloading operations at a loading dock attached to the magazine, or on the pad or apron in front of the magazine, or within the established

boundaries of an AGM. Detached ramps or loading docks that normally service multiple facilities will be sited in accordance with section **V4.E5.7.**

V4.E5.20. REDUCED QD MAGAZINES. The criteria in this section address the use of DDESB-approved reduced QD magazines (e.g., GOLAN 5, 10, and 15, NABCO SV-23 and SV-50, EOD Magazine, Advanced EOD Magazine, and other similar magazines listed in Table AP1-4. of DDESB Technical Paper 15 for AE storage.

V4.E5.20.1. Siting of Reduced QD Magazines

V4.E5.20.1.1. Reduced QD magazines must be sited as AGMs, using the reduced QD distances established as part of the DDESB approval package for each type of magazine.

V4.E5.20.1.2. A DDESB-approved site plan is required before the use of a reduced QD magazine for AE storage. However, when circumstances dictate, use of a magazine may proceed before DDESB approval provided the Service-level explosives safety office (i.e., U.S. Army Technical Center for Explosives Safety; Naval Ordnance Safety and Security Activity; Marine Corps Systems Command, PM, Ammunition; or Air Force Safety Center) has reviewed and approved the submission, the submission is at the DDESB for review and approval, and the DoD Component accepts that the DDESB approval process may impose different or additional requirements.

V4.E5.20.1.3. Siting of reduced QD magazines must comply with specific provisions for their use (e.g., venting, grounding) identified as part of the DDESB approval package for each type of magazine.

V4.E5.20.1.4. The QD distances approved by the DDESB for reduced QD magazines do not account for the hazards presented to surrounding exposures when the magazine door is open or when authorized AE operations are conducted at the magazine. The following criteria are intended to minimize these hazards:

V4.E5.20.1.4.1. The reduced QD magazine should be located and oriented to maximize protection of surrounding exposures. The selection of a location for the reduced QD magazine must not be simply for convenience, but must consider the direction of the door, planned operations, and the need to minimize exposure of personnel and facilities.

V4.E5.20.1.4.2. The reduced QD magazine door should be directed away from occupied spaces and facilities, or at a minimum directed away from the highest exposures.

V4.E5.20.1.4.3. For a reduced QD magazine authorized to contain up to 30 lbs [13.60 kg] NEWQD of HD 1.1, a minimum 50-ft [15.24-m] separation distance should be maintained from the door of the magazine, and from any authorized AE operation at the magazine, to the nearest occupied space or facility. For a reduced QD magazine authorized to contain 30 to 50 lbs [13.60 to 22.68 kg] NEWQD of HD 1.1, a minimum 100-ft [30.50-m] separation distance should be maintained from the door of the magazine, and from any authorized AE operation at the magazine, to the nearest occupied space or facility. At these

separation distances, only minor damage to exposed facilities is expected as a result of blast overpressure; however, windows are likely to break and may present some risk to personnel in exposed facilities. Fragmentation hazards are not addressed by these separation distances. Barricades (see paragraph **V4.E5.20.2.2.6.**) may be used to stop low-angle, high-velocity fragments, which present the greatest threat to surrounding exposures.

V4.E5.20.2. Authorized Operations at Reduced QD Magazines. Significant personnel exposure and risk reductions are obtained by the use of reduced QD magazines for AE storage, even when short-duration explosives operations are conducted at such magazines. Therefore, certain AE operations are authorized at a reduced QD magazine, without regard to QD. AE operations not authorized in paragraphs **V4.E5.20.2.1.1.** through **V4.E5.20.2.1.9.** require siting as an operating location.

V4.E5.20.2.1. The following AE operations may be conducted at reduced QD magazines, without regard to QD, provided the requirements of paragraph **V4.E5.20.2.2.** are met (the criteria and guidance in paragraphs **V4.E5.20.2.1.1.** through **V4.E5.20.2.1.9.** and paragraph **V4.E5.20.2.2.** modify the criteria and guidance for AE operations identified as part of the DDESB approval package for each type of magazine):

V4.E5.20.2.1.1. The movement of packaged AE into and out of reduced QD magazines.

V4.E5.20.2.1.2. The removal of internal packaged AE items from outer packaging (e.g., removal of individually packaged dog scent kit samples from their larger shipping container).

V4.E5.20.2.1.3. The rotation and replacement of dynamite samples in dog scent kits, as required to meet DoD criteria.

V4.E5.20.2.1.4. The issuance of security or reaction force AE for installation force protection, antiterrorism, or other similar mission.

V4.E5.20.2.1.5. The removal and replacement of EOD materials contained in the large pumice containers in the advanced EOD magazine (because the pumice containers are too large to transport in and out of the magazine).

V4.E5.20.2.1.6. The conduct of surveillance or inventory inspections that only involve a visual serviceability inspection of AE.

V4.E5.20.2.1.7. The placement of munitions and explosives of concern (MEC) that EOD personnel or unexploded ordnance (UXO)-qualified personnel have assessed and determined acceptable for movement and storage in an appropriate reduced QD magazine located at a munitions response site (MRS).

V4.E5.20.2.1.8. The conduct of other similar AE operations provided:

V4.E5.20.2.1.8.1. No direct energy is applied to the AE being handled (e.g., cutting, dividing, or crushing), except as allowed in paragraph **V4.E5.20.2.1.9.**

V4.E5.20.2.1.8.2. The AE being handled have not been sensitized or made more sensitive to initiation (e.g., primed).

V4.E5.20.2.1.8.3. The AE being handled are not in a configuration that makes them more susceptible to an unintentional detonation.

V4.E5.20.2.1.9. The cutting of non-fragmenting AE (e.g., detonation cord, C4) designed to be cut using authorized cutting tools, provided all non-essential personnel are removed to a K40 [K_m 15.87] separation distance with a 100-ft [30.5-m] minimum.

V4.E5.20.2.2. The following requirements apply to authorized AE operations at reduced QD magazines:

V4.E5.20.2.2.1. The total NEWQD present (i.e., within the magazine and involved in the operation) must not exceed the rated NEWQD of the reduced QD magazine.

V4.E5.20.2.2.2. To minimize the size and effects of an unintentional detonation, operations conducted at reduced QD magazines must be limited to the smallest MCE possible.

V4.E5.20.2.2.3. AE operations should not be conducted inside reduced QD magazines unless necessary (as in the case of the advanced EOD magazine). Conducting AE operations inside a magazine increases the MCE and the directional effects of an internal explosion out the door.

V4.E5.20.2.2.4. AE operations at reduced QD magazines should be conducted at times when the exposure of unrelated personnel is at a minimum (i.e., at night, before or after work shifts, on weekends).

V4.E5.20.2.2.5. To take advantage of the barricade-type protection offered by the reduced QD magazine structure, conduct AE operations outside of reduced QD magazines:

V4.E5.20.2.2.5.1. As close to the base of the magazine as possible, with the magazine door closed and secured (not required if the magazine does not contain AE).

V4.E5.20.2.2.5.2. On the side of the magazine that is oriented away from the surrounding area having the greatest exposure to be protected.

V4.E5.20.2.2.6. Consider constructing a barricade (to defeat high-velocity, low-angle fragments) for AE operations at reduced QD magazines. Acceptable barricading materials include sandbags and timber sand-filled walls; the barricade must not generate additional debris hazards. The barricade must be at least 6 ft [1.83 m] high, provide line-of-sight protection between AE operations and exposures to be protected, and be the equivalent of two side-by-side sandbags.

V4.E5.21. CRITERIA FOR NON-DoD EXPLOSIVES ACTIVITIES (AE OPERATIONS AND STORAGE) ON DoD INSTALLATIONS

V4.E5.21.1. Non-DoD explosives activities must only be conducted on DoD installations in accordance with Table **V4.E5.T10.** These non-DoD explosives activities must also comply with Bureau of Alcohol, Tobacco, Firearms and Explosives, FAA, and other federal, State, and local regulations. Definitions for the terminology used in Table **V4.E5.T10.** are in the Glossary.

V4.E5.21.2. For these types of non-DoD explosives activities, the DoD is responsible for ensuring that IMD requirements only, as outlined in explosives site plan submissions, are met. DoD oversight of these non-DoD explosives activities is not intended.

V4.E5.21.3. Non-DoD explosives activities are evaluated based on IMD between multiple PESs to ensure non-propagation. Where IMD is not met, then the NEW at each site not meeting IMD separation requirements is added together to determine the basis for the applicable IMD or IBD to use for separation of DoD sites.

Table V4.E5.T10. Criteria for Non-DoD Explosives Activities on DoD Installations[1]

From ➔ / To ➓	Non-DoD Storage	Non-DoD Operations	Shared Launch Facilities	DoD/Joint Storage	DoD Operations
Non-DoD Storage	Check for IMD	Check for IMD	IBD	IMD	IBD
DoD/Joint Storage	IMD	IBD	IBD	IMD	ILD
Non-DoD Operations	Check for IMD	Check for IMD	IBD	IBD	IBD
DoD Operations	IBD	IBD	IBD	ILD	ILD
Shared Launch Facilities	IBD	IBD	ILD[2]	IBD	IBD
DoD Non-Explosives Facilities/Operations Non-Related	IBD	IBD	IBD	IBD	IBD

Note: **(Added)(AF)**
1. **(Added)(AF)** Application of PTRD to low and medium density roadways and privately owned vehicle parking lots is acceptable.
2. **(Added)(AF)** ILD may be applied between shared launch facilities if both parties agree and document to accept the explosives hazard posed to each other.

V4.E5.21.4. In Table **V4.E5.T10.**, "Check for IMD" means that, if IMD is not maintained between each PES, explosives quantities are totaled.

V4.E5.21.5. IBD is determined based on the standards in this manual.

V4.E5.21.6. The DoD site approval for non-DoD explosives activities is limited to the area encumbered by the IBD arcs.

V4.E5.21.7. Review of building design, lightning protection, etc., is not necessary unless design features are used as justification to reduce the IBD arc.

V4.E5.22. RENEWABLE ENERGY PROJECTS

V4.E5.22.1. Equipment, such as wind turbines and solar panel farms, installed to generate renewable energy must be no closer to PESs than PTRD and:

V4.E5.22.1.1. Such equipment must have a full EMR assessment and a comprehensive determination of the EMR environment it generates to allow the DoD Component to fully assess if these sources cause a potential hazard to AE operations. The EMR assessment must be conducted in actual field conditions to allow the DoD to determine if there are potential EMR hazards to DoD facilities and operations introduced by the presence of renewable energy equipment.

V4.E5.22.1.1. **(Added)(AF)** Complete a full HERO assessment IAW AFI 91-208.

V4.E5.22.1.2. Associated power lines must also meet the requirements of section **V2.E3.5.**

V4.E5.22.1.3. Explosives safety site plans for this equipment must identify the energy customer and the equipment owner (e.g., DoD Component, commercial power company), and include the equipment owner's acknowledgement of the risk for potential damage to the equipment and power disruption in the event of an explosives accident. Associated inhabited structures are sited at IBD.

V4.E5.22.2. The requirements in paragraph **V4.E5.22.1.** do not preclude the use of individual solar generated power units for lighting, security systems, and building energy reduction systems within explosives storage or operating areas, provided the requirements of **Volume 2 – Enclosure 3** and **Volume 2 – Enclosure 4** are met as appropriate and the DoD Component approves the installation of the unit.

V4.E5.23. MOBILE MISSILE SYSTEMS USED IN A STATIC, DEFENSIVE ROLE.

Mobile missile systems (e.g., PATRIOT, THAAD, NASAMS) may be deployed in a static (non-mobile) role for the protection of friendly forces and selected geopolitical assets (e.g., main operating base, airfield, city) from aerial and missile attack.

V4.E5.23.1. Mobile missile systems in a static role (MMS(SR)) can generate potential hazards to surrounding AE, operations, personnel, and facilities from:

V4.E5.23.1.1. The explosion effects produced by an accidental explosion involving the AE associated with missile systems.

V4.E5.23.1.2. EMR being emitted by the system (see paragraph **V2.E3.7.2.** for hazards of EMR to ordnance).

V4.E5.23.1.3. Backblast generated during a launch of a missile, which may place nearby facilities at risk of collapse or damage from backblast pressures; windows may break and generate hazardous glass fragments; personnel within backblast distance may be severely injured.

V4.E5.23.2. The following explosives safety requirements apply to MMS(SR). They are not applicable to the use of static missile systems on an approved range operating under the control and regulations of a DoD Component and where all accidental explosion effects are contained within the established range surface danger zones associated with the range. Criteria for deployed or contingency situations can be found in **Volume 6 – Enclosure 3** of this manual.

V4.E5.23.2.1. MMS(SR) are deployed in accordance with their specific, established implementation documentation (e.g., field manual, pamphlet, SOPs) to include establishing prescribed exclusionary RF hazard and backblast zones, as applicable.

V4.E5.23.2.1. **(Added)(AF)** Base safe separation requirements from MMS(SR) and support structures (e.g., support crew and security force structures) on this guidance.

V4.E5.23.2.2. Individual launcher stations and any re-loads should be separated from each other by IMD to minimize QD requirements, but if they are not, then NEWQD for all launcher stations and re-loads are summed and used as the basis for determining required QD.

V4.E5.23.2.3. IMD must be provided between MMS(SR)-related AE and surrounding AE storage.

V4.E5.23.2.3. **(Added)(AF)** Site MMS(SR) as AGMs to other PESs in the explosives clear zone where they are deployed.

V4.E5.23.2.4. ILD must be provided between MMS(SR) and surrounding AE-related manned operations.

V4.E5.23.2.4. **(Added)(AF)** Likewise, MMS(SR) deployed within the IBD of AE flightline operations may be sited at ILD to manned flightline support facilities.

V4.E5.23.2.5. IBD or PTRD must be provided, as appropriate, to personnel not associated with AE operations.

V4.E5.23.2.5. **(Added)(AF)** MMS(SR) may be treated as flightline munitions holding areas to aircraft in the explosives clear zone where they are deployed. No separation is required to military use only runways and taxiways.

V4.E5.23.2.6. **(Added)(AF)** Those manned functions solely providing support to MMS(SR) operations (e.g., motor pools) may be sited at ILD from the MMS(SR) and other PESs in the explosives clear zone where they are deployed.

V4.E5.23.3. (Added)(AF) Tactical Missile Separations.

V4.E5.23.3.1. **(Added)(AF)** AIM-9 Missiles.

V4.E5.23.3.1.1. **(Added)(AF)** A warhead detonation will not cause sympathetic detonation of adjacent AIM-9 missiles provided warheads are separated by 22 inches or more, or if warheads are not radially aligned. If these conditions are met, MCE is limited to a single AIM-9 warhead. **(T-1).**

V4.E5.23.3.1.2. **(Added)(AF)** See Table **V3.E3.T3.** for HFD in the open.

V4.E5.23.3.1.3. **(Added)(AF)** AIM-9 missiles that detonate in an AURC will not propagate to any adjacent container either vertically or horizontally. MCE is limited to four warheads.

V4.E5.23.3.2. **(Added)(AF)** AIM-120 Advanced Medium Range Air-to-Air Missile (AMRAAM).

V4.E5.23.3.2.1. **(Added)(AF)** Out of container, these missiles are HD 1.1. In an AURC, they are HD 1.2.1.

V4.E5.23.3.2.2. **(Added)(AF)** MCE is limited to a single AIM-120 missile when the warheads of adjacent AIM-120 missiles are separated by 100 inches or more. See Table **V3.E3.T3.1.** for single missile HFD.

V4.E5.23.3.2.3. **(Added)(AF)** See Table **V3.E3.T3.1.** for HFD for missiles in radial alignment and at less than 100 inches from each other.

V4.E5.23.3.2.4. **(Added)(AF)** Containers. All missiles in an AURC will sympathetically detonate; therefore the MCE is all four warheads in the AURC. For AIM-120s with the WDU-33/B warhead, the AURC MCE is 68 lbs. For AIM-120s with the WDU-41B warhead, the AURC MCE is 76 lbs.

V4.E5.23.3.3. **(Added)(AF)** Single container MCEs may be used for mixed storage configurations of AIM-9 and AIM-120 missile containers provided the following conditions are met:

V4.E5.23.3.3.1. **(Added)(AF)** Each stack of containers contains the same type of missile and warhead.

V4.E5.23.3.3.2. **(Added)(AF)** Each stack is no more than three containers high.

V4.E5.23.3.3.3. **(Added)(AF)** For containers of AIM-9 missiles with the WDU-17 warhead: (1) there is no restriction on the orientation of the missiles relative to one another within a container, (2) there is no restriction on the orientation of the containers relative to one another within a stack, (3) there is no restriction on the orientation of containers between stacks, and (4) there is no required separation between stacks. MCE of the stack(s) is 36.4 lbs of HD 1.1 (based on the four warheads in a single container).

V4.E5.23.3.3.4. **(Added)(AF)** For containers of AIM-120 missiles with the WDU-33/B warhead: (1) orient the missiles in the same direction within the container, (2) there is no restriction on the orientation of the containers relative to one another within a stack, (3) there is no restriction on the orientation of containers between stacks, and (4) there is no required separation distance between stacks. The stack(s) is HD 1.2.1 with an MCE of 68 lbs (based on the four missiles in a single container).

V4.E5.23.3.3.5. **(Added)(AF)** For containers of AIM-120 missiles with the WDU-41/B warhead: (1) orient the missiles in the same direction within the container, (2) there is no restriction on the orientation of the containers relative to one another within a stack, (3) there is no restriction on the orientation of containers between stacks, and (4) there is no required separation distance between stacks. The stack(s) is HD 1.2.1 with an MCE of 76 lbs (based on the four missiles in a single container).

V4.E5.23.3.3.6. **(Added)(AF)** Separate stacks of differing missile and warhead configurations from each other by a horizontal distance of 100 inches (e.g., stacks of AIM-120/WDU-33/B containers will be separated by a horizontal distance of 100 inches from stacks of AIM-120/WDU-41/B containers).

V4.E5.23.3.3.7. **(Added)(AF)** When the above conditions are met, the storage of mixed AIM-9 and AIM-120 missile containers (with the specified warheads) may be sited using the most restrictive of the following:

V4.E5.23.3.3.7.1. **(Added)(AF)** Site the greatest MCE present as HD 1.1 (regardless of whether the greatest MCE is for HD 1.1 or HD 1.2.1).

V4.E5.23.3.3.7.2. **(Added)(AF)** Site the total HD 1.2.1 NEWQD present.

V4.E5.23.3.4. **(Added)(AF)** AGM-65 Maverick Missiles. Explosive weights of individual AGM-65 missiles or loaded launchers need not be added together if adjacent missiles or launchers are separated by at least 130 inches and the nose of any AGM-65 missile does not point at any other missile.

V4.E5.23.3.5. **(Added)(AF)** AGM-88 High-Speed Anti-radiation Missile (HARM). For storage and transportation in an AURC, missiles are assigned HD 1.2.1, with an MCE < 100 lbs. Out of container, missiles are assigned either HD (04) or (08)1.1. A warhead detonation will not cause sympathetic detonation of adjacent warheads if they are separated by at least 6 inches, or if the warheads are not radially aligned.

V4.E5.23.3.6. **(Added)(AF)** Mixed Trailer Loads (i.e. AIM-9 and AIM-120). Use criteria above and configurations as shown in TO 11-1-38. See TP 15 to determine MCE.

V4.E5.24. BLAHAs AND AHAs. To fulfill their missions, certain units must keep their basic load ammunition in armored vehicles, trucks, trailers, and structures or on pads. This involves an acceptance of greater risks to unit personnel, facilities, and equipment than permitted by other parts of this volume. The following apply to BLAHAs and AHAs:

V4.E5.24.1. Storage Compatibility. Storage compatibility requirements of section **V1.E6.4.** do not apply.

V4.E5.24.2. NEWQD Computations. NEWQD computations must be in accordance with paragraph **V1.E7.2.3.**

V4.E5.24.3. Explosives Limits

V4.E5.24.3.1. The maximum NEWQD at any BLAHA or AHA cell storing mixed compatibility must not exceed 8,818 lbs [4,000 kg]. A BLAHA or AHA may have multiple 8,818-lb [4,000-kg] cells, provided the cells are separated from each other by the applicable distances (D1, D2, and D3) given in Table **V4.E5.T11.**

V4.E5.24.3.2. When the NEWQD of a BLAHA or AHA cell exceeds 8,818 lbs [4,000 kg], the QD computations for the site must be in accordance with **Volume 3** of this manual, the HD mixing rules must be in accordance with **Volume 1 – Enclosure 7**, and the explosives compatibility storage criteria must be in accordance with **Volume 1 – Enclosure 6**.

V4.E5.24.4. QD Computations

V4.E5.24.4.1. The total NEWQD of AE in each cell is used for computation of QD provided the required distances of Table **V4.E5.T11.** are met, to prevent prompt propagation between cells. If the 8,818 lbs [4,000 kg] NEWQD limit or required separation distances are not met, then the entire BLAHA/AHA is considered one site and paragraph **V4.E5.24.3.2.** applies.

V4.E5.24.4.2. Table **V4.E5.T11.** provides the QD requirements for BLAHAs and AHAs.

Table V4.E5.T11. QD Requirements for Armored and Non-armored Vehicles

From ➔ / To ➓	Heavy Armored	Light Armored	Non-Armored
Heavy Armored (IMD Exposure)	IMD Not Required	IMD Not Required	IMD Not Required
Light Armored (IMD Exposure)	IMD Not Required	D1 from Table **V4.E5.T12.**	D1 from Table **V4.E5.T12.**
Non-Armored (IMD Exposure)	IMD Not Required	D3 from Table **V4.E5.T12.**[a]	D3 from Table **V4.E5.T12.**[a]
PTRD Exposure	D6 from Table **V4.E5.T12.**	D4 from Table **V4.E5.T12.**	D4 from Table **V4.E5.T12.**
IBD Exposure	D6 from Table **V4.E5.T12.**	D5 from Table **V4.E5.T12.**	D5 from Table **V4.E5.T12.**
a	D1 distance can be applied if a barricade is provided between PES and ES. Refer to Table **V4.E5.T12.** footnotes regarding the need for a barricade.		

V4.E5.24.4.3. Use Table **V4.E5.T12.** to determine the applicable QD for heavy, light, and non-armored vehicles, as described in paragraph **V4.E5.24.5.** Intraline requirements are given in Footnote a of Table **V4.E5.T12.**

V4.E5.24.5. AE Loaded Vehicles. For the purposes of BLAHA criteria, combat vehicles are treated as heavy armored, light armored, or non-armored.

V4.E5.24.5.1. Heavy Armored Vehicles (e.g., M1 Abrams Tank).

V4.E5.24.5.1.1. A heavy armored vehicle is expected to contain the fragments from an internal explosion involving the munitions stored within it, so QD is based on blast impulse only. It is also considered well protected against the explosion effects from an external explosion.

V4.E5.24.5.1.2. For the reasons above, a heavy armored vehicle has no IMD and requires no separation from other heavy, light armored, or non-armored vehicles. However, the hatches of a heavy armored vehicle are required to be closed, otherwise the vehicle must be treated as light armored.

V4.E5.24.5.1.3. All munitions must be contained within the on-board storage compartments, otherwise the heavy armored vehicle must be treated as non-armored as a PES.

Table V4.E5.T12. QD for BLAHAs and AHAs[a]

NEWQD	D1[b]	D2[c]	D3[d]	D4[e]	D5[f]	D6[g]
(lbs)	(ft)	(ft)	(ft)	(ft)	(ft)	(ft)
[kg]	*[m]*	*[m]*	*[m]*	*[m]*	*[m]*	*[m]*
10	4	13	26	284	474	66
4.5	*1.3*	*3.9*	*7.9*	*86.6*	*144.4*	*20*
15	5	15	30	303	506	66
6.8	*1.5*	*4.5*	*9*	*92.5*	*154.2*	*20*
20	5	16	33	317	529	66
9.1	*1.6*	*5*	*9.9*	*96.7*	*161.1*	*20*
30	6	19	37	336	561	66
13.6	*1.9*	*5.7*	*11.4*	*102.5*	*170.9*	*20*
50	7	22	44	361	601	66
22.7	*2.2*	*6.7*	*13.5*	*109.9*	*183.2*	*20*
70	8	25	49	377	628	66
31.8	*2.5*	*7.5*	*15.1*	*114.8*	*191.3*	*20*
100	9	28	56	395	658	66
45.4	*2.8*	*8.5*	*17*	*120.2*	*200.4*	*20*
110	10	28	57	417	695	66
49.9	*2.9*	*8.8*	*17.5*	*127*	*211.7*	*20*
150	11	32	64	489	815	81
68	*3.2*	*9.7*	*19.4*	*149.1*	*248.5*	*24.6*
180	*11*	*34*	*68*	*532*	*886*	*92*
81.6	*3.4*	*10.3*	*20.6*	*162*	*270*	*27.9*

Table V4.E5.T12. QD for BLAHAs and AHAs,[a] Continued

NEWQD	D1[b]	D2[c]	D3[d]	D4[e]	D5[f]	D6[g]
(lbs)	(ft)	(ft)	(ft)	(ft)	(ft)	(ft)
[kg]	*[m]*	*[m]*	*[m]*	*[m]*	*[m]*	*[m]*
200	12	35	70	532	886	98
90.7	*3.5*	*10.7*	*21.4*	*162*	*270*	*30*
300	13	40	80	532	886	130
136.1	*4.1*	*12.2*	*24.5*	*162*	*270*	*39.6*
331	14	41	83	532	886	139
150	*4.2*	*12.6*	*25.3*	*162*	*270*	*42.3*
500	16	48	95	532	886	
226.8	*4.8*	*14.5*	*29*	*162*	*270*	
700	18	53	107	532	886	
317.5	*5.4*	*16.2*	*32.5*	*162*	*270*	
1,000	20	60	120	532	886	
453.6	*6.1*	*18.3*	*36.6*	*162*	*270*	
1,500	23	69	137	532	886	
680.4	*6.9*	*20.9*	*41.9*	*162*	*270*	
2,000	25	76	151	532	886	
907.2	*7.6*	*23*	*46.1*	*162*	*270*	
3,000	29	87	173	532	886	
1,360.80	*8.8*	*26.4*	*52.7*	*162*	*270*	
5,000	34	103	205	532	886	
2,268.00	*10.4*	*31.3*	*62.5*	*162*	*270*	
5,500.00	35	106	212	532	886	
2,494.80	*10.7*	*32.3*	*64.5*	*162*	*270*	
7,000	38	115	229	612	1,021	
3,175.20	*11.6*	*35*	*69.9*	*183.6*	*306*	
8,818	41	124	248	687	1146	
4,000	*12.5*	*37.6*	*75.5*	*206.1*	*343.4*	

a	BLAHA and AHA ILD for other than heavy armored vehicles is determined in accordance with paragraph **V3.E3.1.4.** For heavy armored vehicles, ILD is the lesser of the computed value using K18 [K_m 7.14] or the D6 column in this table.

Table V4.E5.T12. QD for BLAHAs and AHAs,[a] Continued

b	D1 is used for: 1. Non-armored vehicle (PES) to non-armored vehicle (ES), when an adequate barricade in accordance with section **V2.E5.4.** is located between them. 2. Light armored vehicle (PES) to non-armored vehicle (ES), when an adequate barricade in accordance with section **V2.E5.4.** is located between them. 3. Light armored or non-armored vehicle (PES) to light armored vehicle (ES), no barricade required. 4. Determining D1 and NEWQD for D1: English EQNs (NEWQD in lbs, D1 in ft)	
	$D1 = 2*NEWQD^{1/3}$	EQN V4.E5.T12-1
	$NEWQD = (D1/2)^3$ with a maximum of 8,818 lbs	EQN V4.E5.T12-2
	Metric EQNs (NEWQD in kg, D1 in m)	
	$D1 = 0.79*NEWQD^{1/3}$	*EQN V4.E5.T12-3*
	$NEWQD = (D1/0.79)^3$ with a maximum of 4,000 kg	*EQN V4.E5.T12-4*
c	D2 is used for: 1. Non-armored or light armored vehicles to the side or rear of an undefined ECM. 2. Determining D2 and NEWQD for D2: English EQNs (NEWQD in lbs, D2 in ft)	
	$D2 = 6*NEWQD^{1/3}$	EQN V4.E5.T12-5
	$NEWQD = (D2/6)^3$ with a maximum of 8,818 lbs	EQN V4.E5.T12-6
	Metric EQNs (NEWQD in kg, D2 in m)	
	$D2 = 2.38*NEWQD^{1/3}$	*EQN V4.E5.T12-7*
	$NEWQD = (D2/2.38)^3$ with a maximum of 4,000 kg	*EQN V4.E5.T12-8*
d	D3 is used for: 1. Non-armored vehicles to non-armored vehicles without an adequate barricade. 2. Light armored vehicles to non-armored vehicles without an adequate barricade at the non-armored vehicles. 3. Non-armored vehicles, light armored vehicles, to the front of undefined ECM when no barricade is present at the ES. 4. Determining D3 and NEWQD for D3: English EQNs (NEWQD in lbs, D3 in ft)	
	$D3 = 12*NEWQD^{1/3}$	EQN V4.E5.T12-9
	$NEWQD = (D3/12)^3$ with a maximum of 8,818 lbs	EQN V4.E5.T12-10
	Metric EQNs (NEWQD in kg, D3 in m)	
	$D3 = 4.76*NEWQD^{1/3}$	*EQN V4.E5.T12-11*
	$NEWQD = (D3/4.76)^3$ with a maximum of 4,000 kg	*EQN V4.E5.T12-12*
e	D4 is used for: 1. PTRD for a BLAHA or AHA PES that cannot stop primary fragments but will generate debris (e.g., open or light weight structure, ISO container, non-armored or light armor vehicle). 2. D4 = 60%*D5	

Table V4.E5.T12. QD for BLAHAs and AHAs,[a] Continued

f	D5 is used for: 1. IBD for a BLAHA or AHA PES that cannot stop primary fragments but will generate debris (e.g., open or light weight structure, ISO container, non-armored or light armor vehicle). 2. Determining D5 and NEWQD for D5: English EQNs (NEWQD in lbs, D5 in ft)		
	NEWQD ≤ 180 lbs	Use equations from Footnote c, Table **V3.E3.T2.**	
	180 lbs < NEWQD ≤ 5,500 lbs:	D5 = 886 ft	
	5,500 lbs < NEWQD ≤ 8,818 lbs:	D5 = 12.2*NEWQD$^{1/2}$	EQN V4.E5.T12-13
	D5 < 886 ft:	Use equations from Footnote d, Table **V3.E3.T2.**	
	886 ft ≤ D5 ≤ 1,146 ft:	NEWQD = (D5/12.2)^2 with a maximum of 8,818 lbs	EQN V4.E5.T12-14
	Metric EQNs (NEWQD in kg, D5 in m)		
	NEWQD ≤ 81.65 kg	*Use equations from Footnote c, Table **V3.E3.T2.***	
	81.65 kg ≤ NEWQD ≤ 2,495 kg	*D5 = 270 m*	
	2,495 kg < NEWQD ≤ 4,000 kg	*D5 = 5.43*NEWQD$^{1/2}$*	*EQN V4.E5.T12-15*
	D5 < 270 m:	*Use equations from Footnote d, Table **V3.E3.T2.***	
	270 m ≤ D5 ≤ 343.4 m:	*NEWQD = (D5/5.43)^2 with a maximum of 4,000 kg*	*EQN V4.E5.T12-16*
g	D6 is used for: 1. Determining the IBD and PTRD from heavy armored vehicles. When NEWQD exceeds 331 lbs [150 kg] the IBD and PTRD specified in Volume 3 of this manual apply. 2. Determining D6 and NEWQD for D6: English EQNs (NEWQD in lbs, D6 in ft)		
	NEWQD ≤ 110 lbs:	D6 = 66 ft	
	110 lbs < NEWQD ≤ 331 lbs:	D6 = -4.49 + 0.487*(NEWQD$^{1/3}$) + 2.928*(NEWQD$^{1/3}$)^2	EQN V4.E5.T12-17
	D6 < 66 ft:	NEWQD = 0 lbs	
	66 ft ≤ D6 ≤ 138 ft:	NEWQD = (0.0833 + [1.5421 + 0.3416*D6]$^{1/2}$)^3	EQN V4.E5.T12-18
	Metric EQNs (NEWQD in kg, D6 in m)		
	NEWQD < 50 kg:	*D6 = 20 m*	
	50 kg ≤ NEWQD ≤ 150 kg:	*D6 = -1.37 + 0.193*(NEWQD$^{1/3}$) + 1.512*(NEWQD$^{1/3}$)^2*	*EQN V4.E5.T12-19*
	D4 < 20 m:	*NEWQD = 0 kg*	
	20 m ≤ NEWQD ≤ 42.3 m:	*NEWDQ = (0.0640 + [0.9108 + 0.6615*D6]$^{1/2}$)^3*	*EQN V4.E5.T12-20*

V4.E5.24.5.2. Light Armored Vehicles (e.g., M109 Howitzer, FAASV, M113 Mortar Tracks, M2/M3 Bradley Fighting Vehicle, MRAP)

V4.E5.24.5.2.1. A light armored vehicle is not expected to contain the explosion effects from an internal explosion involving the munitions stored within it, and the munitions and vehicle will generate fragments. It is expected that the vehicle's structure or armor will either stop primary fragments or significantly reduce fragment velocities from an external munitions explosion. Consequently, QD for a light armored vehicle is based on blast, fragments, and vehicle debris.

V4.E5.24.5.2.2. A light armored vehicle does provide protection from an external blast and fragments and debris.

V4.E5.24.5.2.3. A light armored vehicle is treated as a barricaded ES and as an unbarricaded PES.

V4.E5.24.5.2.4. The hatches and ramps are required to be closed, otherwise the vehicle must be treated as non-armored.

V4.E5.24.5.2.5. All munitions must be contained within the light armored vehicle (e.g., no external carry munitions) for it to be considered as a barricaded ES, otherwise the vehicle must be treated as non-armored.

V4.E5.24.5.3. Non-armored Vehicles (e.g., HUMVEE, Trailer). Non-armored vehicles provide no protection from an internal or external explosion.

V4.E5.25. PARKING LOTS. Parking lots for privately owned vehicles (POVs) belonging to personnel employed or stationed at PESs. A minimum distance of 100 ft [30.5 m] is required from PESs to protect PESs from vehicle fires. The minimum 100 ft [30.5 m] separation may be reduced to 50 ft [15.2 m] provided the PESs are of non-combustible construction, and sufficient measures are in place between POV parking spaces and PESs to prevent a parked vehicle from rolling to within 50 ft [15.2 m] of PESs (e.g., sloping grade, curbs, vehicle barriers, drainage features). Access for emergency vehicles must be provided. The provisions of this paragraph do not negate the need to comply with applicable security requirements for POV access to or parking in explosives areas. (See DoDM 5100.76 for applicable security requirements.)

V4.E5.25.1. **(Added)(AF)** Site parking lots not supporting the explosives mission (such as parking lots for administrative areas) as PTR exposures per Tables **V3.E3.T17.**, **V3.E3.T18.**, and **V3.E3.T19.** A minimum 100-foot separation distance is required unless a greater minimum distance is specified in Tables **V3.E3.T17.**, **V3.E3.T18.**, and **V3.E3.T19.** Motor pools normally require IBD because of office, workshops, and other inhabited buildings.

V4.E5.25.2. **(Added)(AF)** Temporary parking of government owned vehicles (GOVs) or AGE, other than those being loaded or unloaded, will not be closer than 25 feet to any PES. **(T-1).** Temporary means the length of time the presence of the vehicle is essential to completion of a single task (e.g., a single work order number).

V4.E5.25.3. **(Added)(AF)** Site parking lots used exclusively for non-munitions WRM vehicles at ILD from all PESs. A minimum 100-foot separation distance is required. **(T-1).** Use PTRD or IBD, when possible, to prevent unacceptable damage to critical war support vehicles and equipment.

V4.E5.26. (ADDED)(AF) SERVICE MAGAZINES FOR OPERATING LOCATIONS.

V4.E5.26.1. **(Added)(AF)** Apply ILD from a service magazine to the operating location it supports. No QD separation is required from the supported operating location back to the service magazine. See paragraph **V1.E7.3.3.**

V4.E5.26.2. **(Added)(AF)** Site the service magazine as an AGM per Tables **V3.E3.T17.**, **V3.E3.T18.**, and **V3.E3.T19.** to all PESs that it does not support. **(T-1).**

V4.E5.26.3. **(Added)(AF)** Do not use railcars and vehicles as service magazines for explosives operating locations, unless such use is essential.

V4.E5.27. (ADDED)(AF) OTHER ALLOWABLE EXPOSURES.

V4.E5.27.1. **(Added)(AF)** Facilities that exclusively support an explosives area may be separated from the PESs in the explosives area as follows:

V4.E5.27.1.1. **(Added)(AF)** Unmanned hazardous material collection points may be located at fire protection distance (50 feet for non-combustible structures, 100 feet for combustible structures).

V4.E5.27.1.2. **(Added)(AF)** When essential for security purposes, site one-person guard towers at 50 feet. One person guard shelters require no QD.

V4.E5.27.1.3. **(Added)(AF)** Small latrines may be located at fire protection distance (50 feet for non-combustible structures, 100 feet for combustible structures). This facility type is limited to toilets and sinks and do not contain showers, clothing lockers, or other conveniences.

V4.E5.27.2. **(Added)(AF)** The following facilities that exclusively support a single PES may be located at fire protection distance (50 feet for non-combustible structures, 100 feet for combustible structures) from the PES they support; provide separation to all other PESs:

V4.E5.27.2.1. **(Added)(AF)** Transformers.

V4.E5.27.2.2. **(Added)(AF)** Low pressure boilers. Some specially designed operating buildings have attached rooms for low pressure boilers and other facilities. These buildings have safety features such as protective concrete separating walls (without openings) between boiler and working areas, light roof and frangible exterior walls for boiler enclosures. Such buildings, built according to Air Force definitive drawings, require no separation. This exception applies only where equipment installed or contained in attached rooms meets or exceeds original specifications and does not create additional hazards.

V4.E5.27.2.3. **(Added)(AF)** Paint storage buildings.

V4.E5.27.2.4. **(Added)(AF)** Auxiliary facilities such as heating plants, line offices, break areas, briefing rooms for daily work schedules or site safety matters, joiner shops, security posts, and similar functions.

V4.E5.27.3. **(Added)(AF)** The following facilities require no QD or fire protection distance separation:

V4.E5.27.3.1. **(Added)(AF)** One-person security structures for weapons-loaded aircraft; provide fire protection distance separation when possible.

V4.E5.27.3.2. **(Added)(AF)** Defensive fighting positions.

V4.E5.27.3.3. **(Added)(AF)** Break rooms, supply rooms, and change houses integral to a PES.

V4.E5.27.3.4. **(Added)(AF)** Offices, integral to a PES, of personnel who perform hands-on work in the PES (e.g., assemble, maintain, inspect, and test), and the Non-Commissioned Officer in Charge and first level supervisors (crew chiefs) of those who do hands-on work.

V4.E5.27.4. **(Added)(AF)** Abandoned facilities require no QD; however, fire protection distance separation applies. These facilities may or may not be scheduled for demolition.

V4.E5.28. (ADDED)(AF) LGM-30 (MINUTEMAN). Use Table **V4.E5.T13.** to determine HE equivalency for the LGM-30 missile when calculating QD separations.

V4.E5.28.1. **(Added)(AF)** Calculate NEWQD for motor sets (Stages I, II, and III), assembled or unassembled, with HD 1.1 material, on HD 1.1 equivalency basis unless the HD 1.3 hazard is greater.

V4.E5.28.2. **(Added)(AF)** When only HD 1.3 motors are present, use total NEWQD of the motors, and apply HD 1.3 QD criteria. For LGM-30G motors, use HD 1.3 QD criteria for shipping and storage purposes. When a warhead is added to the assembled set, the 7,400-lb HE equivalency applies. Safety distances are based on 7,400 lbs HD 1.1 HE equivalency for all LGM-30 missile motor sets (models A through G) with or without a warhead installed. The IBD zone based on 7,400 lbs HD 1.1 is 1,200 feet measured from the center of the launch facility silo.

V4.E5.28.3. **(Added)(AF)** Separations for aircraft loading and unloading sites for solid propellant motors in shipping and storage containers, Storage, Shipping Container Ballistic Missile and Payload Transporter Container: IBD is 1,200 feet (includes missile holding pads, facilities, aircraft or other equipment essential to the mission of the base); PTRD is 720 feet.

V4.E5.28.4. **(Added)(AF)** Aircraft Loading and Unloading Sites. When an aircraft loaded with these motors must be refueled, a fully staffed firefighting truck will be on standby at the aircraft during fueling operations. **(T-1).**

V4.E5.28.5. **(Added)(AF)** Railroad Loading and Unloading Sites. Control loading or unloading operations to reduce exposures to a minimum. The provisions of Bureau of Explosives Pamphlet 6C apply to explosives piggyback operations.

V4.E5.28.6. **(Added)(AF)** MAF. Explosives-loaded vehicles (e.g., payload transporter, reentry vehicle guidance and control van, transporter erector(TE)) may be temporarily parked at the MAF, subject to the following controls:

V4.E5.28.6.1. **(Added)(AF)** The wing or installation commander or designated representative must approve each instance. **(T-1).**

V4.E5.28.6.2. **(Added)(AF)** Allow parking, if needed, for severe weather, equipment breakdown and repair, crew rest, darkness (where state law prohibits vehicle travel on highways after dark) or other emergency conditions.

V4.E5.28.6.3. **(Added)(AF)** No smoking outside missile alert facility support buildings. **(T-1).**

V4.E5.28.6.4. **(Added)(AF)** Park only one explosives-loaded vehicle. **(T-1).**

V4.E5.28.6.5. **(Added)(AF)** Publish a detailed operating instruction of safety precautions and controls. **(T-1).**

V4.E5.28.6.6. **(Added)(AF)** Ensure required security is maintained.

V4.E5.29. (ADDED)(AF) SPACE AND INTERCONTINENTAL BALLISTIC MISSILE REQUIREMENTS

V4.E5.29.1. **(Added)(AF)** General Information. This section establishes explosives safety standards for storing, staging, maintaining, processing, assembling, handling, and testing large solid rocket motors (LSRM), motor segments and liquid propellants used in conjunction with space launch systems and ICBM test launches, and provides methods and criteria for mitigating the pre-launch risks associated with these operations.

V4.E5.29.1.1. **(Added)(AF)** These standards apply to Air Force locations that process, launch, and test launch vehicles or ballistic missiles containing more than 500 pounds of liquid propellants or more than 10,000 pounds of solid propellants. QD criteria for space and ICBM systems are found in paragraph **V4.E5.29.9.**

V4.E5.29.1.2. **(Added)(AF)** Space launch vehicles and ICBM class missile systems use large quantities of energetic materials as fuel and oxidizer for their propulsion systems. Typically, these propulsion systems contain liquid or solid propellants in thousand to million pound quantities. These launch vehicles and missile systems can, under launch conditions, react much more violently than during conditions such as transportation, storage, and handling. Launch conditions include vehicles in a fully pressurized configuration (i.e., during countdowns and rehearsals, and testing on test stands). Pressurized vehicles can present a hazard to a wide area and, in some cases, miles of exposure. The combination of the potential for large explosions coupled with possible wide dispersion of the threat requires different methods of mitigating explosive hazards than normally used for non-dynamic hazards analysis, hazard classification, threat mitigation, and siting. These hazards and mitigating techniques will be contained in range or test requirement documents.

V4.E5.29.2. (Added)(AF) Support Facilities. These include those facilities used to store, stage, or process large rocket motors and motor segments. The same facility may be used for

both staging and processing these motors. Take thermal and toxic properties as well as potential explosive effects IAW applicable directives such as UFC 3-340-02 into consideration prior to selecting or constructing operational maintenance and staging facilities for large rocket motors and motor segments.

V4.E5.29.2.1. **(Added)(AF)** Facility design and operational processing flow must keep the physical movement of these large rocket motors and motor segments to an absolute minimum. Limit the operations performed in these facilities to those associated with the primary function of the facility. Establish safety control areas as defined in section **V4.E5.29.3.**, for all hazardous operations in these facilities.

V4.E5.29.2.2. **(Added)(AF)** There are two basic types of support facilities for LSRM and motor segments; a Motor Operations and Staging Facility, and a Motor Storage Facility.

V4.E5.29.2.2.1. **(Added)(AF)** Motor Operations and Staging Facility. This facility is primarily used to process and assemble LSRMs and motor segments for launch operations. It also has the capability for staging and maintaining motors and motor segments. Conduct operations involved with preparing LSRMs and motor segments using approved receipt-to-launch procedures or other approved technical data. Unlike many explosives operating buildings currently existing on military installations, the large motor facilities may have many direct support personnel simultaneously performing different tasks in support of the launch preparation.

V4.E5.29.2.2.1.1. **(Added)(AF)** Limit personnel to the minimum number necessary to accomplish the operation. Establish personnel limits in the operating procedures. Perform scheduled and unscheduled maintenance in this facility on motors and segments in the staging area.

V4.E5.29.2.2.1.2. **(Added)(AF)** Limit maintenance of large rocket motors and motor segments in the staging area to periodic maintenance and inspections unless a hazard risk analysis indicates other operations may be safely performed.

V4.E5.29.2.2.1.3. **(Added)(AF)** When unscheduled or unforeseen operations must be accomplished on solid motors in the staging area, the appropriate technical team will perform a risk assessment IAW AFPAM 90-803. **(T-1).** Air Force explosives safety personnel will then evaluate and obtain approval of the risk assessment at the appropriate command level. **(T-1).**

V4.E5.29.2.2.2. **(Added)(AF)** Motor Storage Facility. This facility is primarily used for long term storage of motors and motor segments. Keep the movement of LSRMs and motor segments into and out of storage to an absolute minimum. Hazardous operations normally performed in these facilities involve lifting and positioning LSRMs and motor segments. Selected maintenance operations may be performed in these facilities provided they are limited to periodic maintenance inspections using approved procedures. Unscheduled operations, such as repairs or the correction of discrepancies found during periodic inspections, may be performed in these facilities if a risk assessment concludes it is less hazardous to perform the maintenance in the facility than to move the segment to another isolated facility. If government resources are

at risk, the wing commander or equivalent commander approves the task before it begins. If only commercial resources are at risk, risk assessment is the responsibility of the commercial operator. Use only commander approved and safety reviewed and approved procedures when maintaining or repairing LSRMs and motor segments.

V4.E5.29.2.3. **(Added)(AF)** MAJCOMs determine whether two operations involving LSRMs are dissimilar with respect to the hazards presented and therefore require ILD separation. Factors to consider when making this determination are:

V4.E5.29.2.3.1. **(Added)(AF)** The explosive characteristics and quantities of explosives involved in each operation.

V4.E5.29.2.3.2. **(Added)(AF)** The end use of the LSRMs undergoing preparation.

V4.E5.29.2.3.3. **(Added)(AF)** The makeup of the teams performing the operations (i.e., Will the same team perform the operations?).

V4.E5.29.2.4. **(Added)(AF)** When contractor owned large rocket motors undergoing preparation are used for both DoD or commercial payloads of dissimilar programs and are within ILD, the responsible contract program offices and installation commander must approve the risk analysis. Once approved, use the combined NEWQD of all rocket motors within the PES for explosive siting. Adhere to QD requirements between other ES and PES within IB of the operating location.

V4.E5.29.2.5. **(Added)(AF)** Separate LSRMs earmarked for DoD weapons or specific missions directed by presidential mandate in support of national defense (currently Minuteman III and Missile Defense Agency resources) from non-DoD assets by IBD.

V4.E5.29.3. (Added)(AF) Safety Control Area. A safety control area is an area where personnel and equipment exposure is controlled in order to limit the risk from hazardous explosives operations. For LSRMs, the safety control area is an area centered where the ordnance task is taking place and has a radius of IBD based on the quantity of explosives which may become involved in a mishap. Certain engineering controls allow a reduction or modification in the size of the safety control area. Only one hazardous explosives operation may take place in a safety control area at a time. **(T-1).** Personnel required to be in the safety control area during an explosives operation are considered essential personnel; conversely, people who do not meet this definition are considered non-essential.

V4.E5.29.4. (Added)(AF) Simultaneous Operations. The large size of motor segments allows multiple operations to be easily conducted simultaneously on a single element, but the potential hazards that one task may present to another task must be carefully assessed before allowing more than one operation to proceed. Personnel performing processing or maintenance tasks on LSRM segments must be aware of other tasks that may be in progress on the same segment. Only perform a single operation within the same safety control area at a time. **(T-1).**

V4.E5.29.5. (Added)(AF) Barricades. Use barricades with fixed storage tanks to prevent high velocity fragments from a ground liquid fuel propellant vapor phase confined explosion striking a test vehicle on the test stand. Design these barricades according to the criteria in section **V2.E5.4.**

V4.E5.29.6. (Added)(AF) Space Launch Complex. A space launch complex consists of a group of related facilities used for launching space vehicles. Facilities generally included are the launch pad(s), liquid propellant storage tanks, site instrumentation facilities, engineering personnel support buildings, and launch center. Additional facilities include LSRM facilities and spacecraft processing facilities. A launch complex normally involves a variety of explosive hazards, the result of the presence of various quantities of liquid and solid propellants producing both mass fire and detonation explosive hazards. Perform system safety engineering hazard analyses of the complex to identify the various explosive hazards, their relationships, and the safety threat zones and launch area location. QD criteria is found in section **V4.E5.29.9.**

V4.E5.29.7. (Added)(AF) Space Test Facilities. Space test facilities normally consist of a wide array of test resources to support customers including flight hardware (ballistic, space, sounding rocket launch vehicles, and satellites) and ground systems (field test, assembly and storage, launch, and on-orbit test facilities). A space test facility typically includes liquid propellant storage tanks or test site instrumentation, facility engineering personnel support buildings, and a control center. The facilities normally involve a variety of liquid and solid propellants and can produce both mass fire and detonation explosive hazards. Perform system safety engineering hazard analyses of the facilities to identify the various hazards, their relationships, the safety threat zones, etc.

V4.E5.29.8. (Added)(AF) Risk Management. RM processes found in AFI 90-802, AFPAM 90-803, and the standard practices in MIL-STD 882E are used to identify and to assess potential hazards; and to determine and to implement controls to minimize the risks associated with operations involving LSRMs and motor segments.

V4.E5.29.8.1. **(Added)(AF)** The major hazards associated with space launch vehicles and missile prelaunch and propulsion test operations involve large quantities of propellants used in propulsion systems, destruct charges, and high pressure gas systems.

V4.E5.29.8.2. **(Added)(AF)** Perform hazard assessments to measure the potential for and consequences of mishaps resulting from the undesired release of energy or inhibiting the desired release of energy. Use these assessments to define the MCE.

V4.E5.29.8.3. **(Added)(AF)** Assess all launch vehicle operations to evaluate the hazards and to determine the mitigating activities necessary to achieve an acceptable level of risk, both for personnel and the launch or test site.

V4.E5.29.8.4. **(Added)(AF)** Determine the expected risk before beginning any potentially hazardous operation and get approval from the appropriate supervisory level before proceeding. **(T-1).** Risk analyses must show that the potential benefits outweigh the cost in terms of overall risk before the operation is approved. **(T-1).**

V4.E5.29.8.5. **(Added)(AF)** Credible Failure Modes. In order to determine the potential threat that a given launch vehicle and support system configuration poses during prelaunch or propulsive test operations, define credible failure modes. The specific failure mode that occurs will have a large influence on the explosive yield and the resultant blast overpressure, fragmentation, and thermal effects and thus on the severity of the accident environments, risk to personnel, and damage to facilities. General scenario categories include the following phases and operations:

V4.E5.29.8.5.1. **(Added)(AF)** Prelaunch and Test Operations.

V4.E5.29.8.5.2. **(Added)(AF)** Storage.

V4.E5.29.8.5.3. **(Added)(AF)** Handling.

V4.E5.29.8.5.4. **(Added)(AF)** Assembly.

V4.E5.29.8.5.5. **(Added)(AF)** Checkout (at the assembly building and at the launch or test complex).

V4.E5.29.8.5.6. **(Added)(AF)** Final Assembly.

V4.E5.29.8.5.7. **(Added)(AF)** Ordnance Installation.

V4.E5.29.8.5.8. **(Added)(AF)** Propellant Loading.

V4.E5.29.8.5.9. **(Added)(AF)** All-up Vehicle Checkout (prior to launch and static firing).

V4.E5.29.8.6. **(Added)(AF)** General Failure Modes. Handle the failure modes for liquid propellants and solid propellants separately because their geometric and chemical configurations are different. In the case of solid propellants, the fuel and oxidizer are already mixed homogeneously, therefore the failure scenarios do not have to account for mixing. Liquid propellants, on the other hand, are configured in separate storage or launch vehicle tanks, therefore the failure scenarios must account for the type, amount, and probability of mixing propellants.

V4.E5.29.8.7. **(Added)(AF)** Typical Prelaunch Failure Mode Scenarios:

V4.E5.29.8.7.1. **(Added)(AF)** Storage.

V4.E5.29.8.7.1.1. **(Added)(AF)** Liquid propellant scenarios primarily involve leaking or ruptured propellant tanks caused by loss of pressure control, insulation deficiencies, mechanical damage, and corrosion. Fuel and oxidizers are normally stored separately, so limit an MCE to a fire and tank pressure rupture or tank rupture and toxic vapor release.

V4.E5.29.8.7.1.2. **(Added)(AF)** Define solid propellant accident scenarios by the hazard classification grouping - 1.1 mass detonation or 1.3 - mass fire. The most likely candidates to cause accidental ordnance initiation are introduction of stray electrical energy, fire, and dropping the segment with sufficient impact force to initiate the propellant or destruct charge if present.

V4.E5.29.8.8. **(Added)(AF)** Handling.

V4.E5.29.8.8.1. **(Added)(AF)** Handle liquid oxidizer and fuel separately using independent closed loop systems. Normally, differential pressure is used to transfer product from one holding tank to another or to load a launch vehicle. Typical accident events are limited to system leaks, vent and scrubber failures, or at worst, a tank rupture caused by over- or under-pressurization. Launch vehicle propellant loading scenarios are discussed in another section. Load liquid propellants serially to further reduce prelaunch mixing hazards.

V4.E5.29.8.8.2. **(Added)(AF)** Handle solid propellant rocket motors by lifting with cranes or erectors at static test stands, the launch mount, in a processing facility, or by various transportation modes. Typically the MCE scenario involves vehicle rollover, or drop impacts, during lifting or transportation. Drop impacts on hard surfaces can cause propellant ignition.

V4.E5.29.8.8.3. **(Added)(AF)** Booster Assembly.

V4.E5.29.8.8.3.1. **(Added)(AF)** Launch vehicle assembly processes normally do not involve liquid propellants.

V4.E5.36.8.3.2. **(Added)(AF)** Assembly operations for solid propellant rocket motors typically involve the same credible accident scenarios as those listed for handling.

V4.E5.29.8.8.4. **(Added)(AF)** Booster Checkout. Booster checkout normally does not impose additional hazards above and beyond those already listed except that the potential for inadvertent ignition of EIDs, or inadvertent function of propellant system isolation valves, is increased during certain electrical system checkouts. Pad or test stand checkout is normally accomplished after assembly and loading of solid propellant and hypergolic propellant stages. Multi-faceted threats exist with interaction between hypergolic and solid propellants that can result in pressure ruptures, toxic vapor hazard and propulsive flight.

V4.E5.29.8.8.5. **(Added)(AF)** Final Assembly. Normally, the launch booster, upper stages, and payload final assembly process is accomplished on the launch pad. Both solid propellants and hypergolic liquid propellants are present during the final assembly steps. A major threat involves the assembly and encapsulation of spacecraft and upper stages in facilities off the launch complex. These operations normally involve hypergolic propellants loaded in separate propellant tanks. Credible accident scenarios include puncture of one or more of the propellant tanks during assembly or checkout, impact caused by lifting, failure resulting in a dropped system, or over- or under pressurization. Since these propellants are hypergolic; the potential exists for a fire if the fuel comes into contact with an oxidizer. Another major threat involves the toxicity of these propellants. Credible accident scenarios primarily involve

handling, lifting, and mating stages with tank rupture accident scenarios the result of impacts caused by improper handling or dropping one or more stages. The results are the same as those listed above.

V4.E5.29.8.8.6. **(Added)(AF)** Ordnance Installation. Ordnance installation may take place in an off-the-pad assembly building or on the launch pad. During and after installation, credible accident scenarios primarily involve inadvertent ignition of EIDs. These devices must not be capable of detonating either the solid or liquid propellant. Inadvertent ignition of these devices can result in significant damage to the vehicle and severe injury or death to personnel. Unless unavoidable, do not load cryogenic liquid propellants on a launch vehicle until after ordnance is installed.

V4.E5.29.8.8.7. **(Added)(AF)** Propellant Loading. MCE accident scenarios during propellant loading involve over- or under-pressurization of the propellant tanks and major spills of fuel and oxidizer. These scenarios can result in a significant explosive yield.

V4.E5.29.8.8.8. **(Added)(AF)** All-Up Vehicle Checkout. This occurs prior to launch or static firing. During this phase of prelaunch operations the final liquid propellant topping off is completed and in some cases the liquid propellant and high pressure gas systems are brought to flight pressure. All systems are switched to internal power and final systems checks are performed. The MCE involves the fully loaded launch vehicle and payload. Explosive yield is based on static conditions for shock impact on solid propellants and non-dynamic mixing of liquid propellant either by the Confined by Missile (CBM) mode or the Confined by Ground Surface (CBGS) mode.

V4.E5.29.9. (Added)(AF) Space and ICBM Criteria.

V4.E5.29.9.1. **(Added)(AF)** Some launch pad facilities such as mobile service towers, umbilical mast towers, launch ducts, launch center, and launch mounts are identified by a building number on the base master plan. For the purpose of explosive site planning, consider them an "integral part of the facility" and do not require ES separation distances due to the common nature of their function. Likewise, facilities that provide direct support to these launch pads such as maintenance and build-up shops, pressurization systems, instrumentation terminal rooms, etc., are an integral part of the facility and do not require QD separation distances from the pads they support.

V4.E5.29.9.2. **(Added)(AF)** Technical support areas may be associated with these facilities. Locate all direct support personnel at no less than ILD or equivalent protection from the PES and dispatch them to the PES as required.

V4.E5.29.9.3. **(Added)(AF)** Locate any parking lots (GOV or POV) exclusively serving the motor or motor storage, staging, or operations facility according to section **V4.E5.25.**

V4.E5.29.9.4. **(Added)(AF)** Locate launch complexes at Air Force launch ranges using two sets of criteria. Base the first set on QD criteria. They address pre-launch operations (including pressurized launch rehearsal) and static explosive threats. Define these for each facility in the ESP. **(T-1).** The TNT equivalencies to be used are included in Table **V5.E4.T5.**

The second set of criteria is used to locate a launch complex on the range address launch and space vehicle dynamic flight. Range safety guidance defines the criteria and flight safety analysis techniques required to determine the down range explosive threat resulting from a launch.

V4.E5.29.9.4.1. **(Added)(AF)** Separate new launch pads by at least an ILD from each other. The larger NEWQD of the two launch vehicles dictates the minimum separation between the two launch pads. For HD 1.1 launch vehicles, the minimum separation required is K-18. For HD 1.3 launch vehicles, Table **V3.E3.T14.**, ILD column. Hazardous operations in one facility may impact operations in another related facility. In order to protect personnel, consider IBD criteria between launch pads for new construction, as opposed to ILD.

V4.E5.29.9.4.2. **(Added)(AF)** Determine launch complex locations in the range launch area based on flight safety analyses including risk analysis such as the Launch Area Risk Analysis (LARA) program and other flight safety techniques described in range safety guidance. The Range Safety Office responsible for a launch area will consider explosive siting and missile flight hazards when determining the location of a launch complex in relationship with other launch complexes and support facilities.

V4.E5.29.9.4.3. **(Added)(AF)** For QD purposes, measure from the explosives at the launch mount for a launch complex, and at the test stand for a test complex.

V4.E5.29.9.5. **(Added)(AF)** Space Test Facilities. During explosives site planning for new motor or motor segment test operation facilities, provide a personnel direct support facility at least ILD from the PES. It will be a dispatch point, break room, and change room for these personnel. Locate these direct support personnel facilities at closer than ILD if protective measures are used to provide minimum required overpressure and fragment protection. Use the prevailing wind direction as a primary consideration when locating test stands in relationship to other facilities that will be inhabited during testing. Do not hazard Government assets with non-DoD LSRM test facilities on Air Force installations. Use Table **V4.E5.T10.** to determine siting criteria for non-DoD explosives activities. This separate location will permanently house direct support personnel for the PES.

V4.E5.29.9.6. **(Added)(AF)** Static Test Facilities. Site and construct static test facilities for maximum flexibility to meet frequently changing technological requirements. **(T-1).** A typical static test facility will have several test stands that share common support facilities such as ready storage tanks, pressurization systems, test control rooms, maintenance support and build-up shops, and steam-generating vacuum systems. To the extent possible, separate test stands by ILD. In some cases test support requirements, such as vacuum testing, do not support QD separation if test objectives are to be achieved. To minimize the risk to adjacent test stands, use only one test stand at a time when QD requirements cannot be met. Remove or protect all equipment not being used to support current test operations, or obtain a waiver approved at the appropriate level. See **Volume 1 – Enclosure 3** for waiver or exemption procedures.

V4.E5.29.9.7. **(Added)(AF)** Building and Use of Non-DoD Space Explosives Facilities on Air Force Installations and Non-DoD Use of Existing Government Facilities. Air Force

guidance permits a non-DoD space user to lease land on an Air Force installation and construct explosives facilities to support non-DoD and Government space operations. Additionally, a non-DoD space user may be granted a license to use an existing Government explosives facility. These facilities include but are not limited to explosives storage facilities, explosives operations facilities, missile launch pads, test facilities, and combinations thereof. Use Table **V4.E5.T10.** for QD criteria for siting non-DoD explosives activities.

V4.E5.29.9.7.1. **(Added)(AF)** DoD Explosives Hazard Classification. Apply DoD explosives hazard classifications to explosives stored or used on military installations and reflect them in all applicable facility ESPs. For commercial explosive items that have not been acquired and adopted for use by the Air Force, but will be stored and transported on an Air Force installation in conjunction with commercial launch programs, the following exceptions may be applied:

V4.E5.29.9.7.1.1. **(Added)(AF)** The items may be offered for transportation off the installation via commercial carriers using hazard classification approvals issued to the item manufacturers by the DOT.

V4.E5.29.9.7.1.2. **(Added)(AF)** An item may be stored, handled, and transported on the installation using the hazard classification approval issued by DOT if the local commander reviews and concurs with that hazard classification, except for articles assigned to hazard class or division 1.2. These must be stored and handled as DoD hazard class or division 1.1. **(T-1).** Obtain approval to store non-DoD commercial items as hazard class or division 1.2 from a DoD hazard classification authority listed in TO 11A-1-47.

V4.E5.29.9.7.2. **(Added)(AF)** Expanding QD and Risk Assessment. Problems are encountered around launch pads and test stands where lack of real estate coupled with a high concentration of people, facilities, and equipment make compliance with QD standards impossible. Explosive content of a launch pad or test stand varies according to a well-defined operational concept and the maximum NEW is typically present only during a short period of time just before launch or test. This allows management to take actions to protect or remove resources and personnel as the NEW is increased.

V4.E5.29.9.7.3. **(Added)(AF)** Expanding QD. Expanding QD is a process available to commanders similar to tiered siting allowing them to analyze and minimize risk to personnel, facilities, and operational capabilities. Expanding QD is a risk-based management tool that provides an organized way to evaluate risks and assess action that mitigates the impact of an explosive mishap during periods of increased activity. In an expanding QD system, a launch pad or test stand may have different NEWQDs during different stages of prelaunch or test missile buildup. To maximize protection under the expanding QD approach, the responsible commander will develop and publish procedures to ensure non-essential equipment, supplies, and personnel are removed prior to increasing NEWQD limits. **(T-1).**

V4.E5.29.9.7.4. **(Added)(AF)** Procedures for Expanding QD RM. Determine launch pad or test stand NEWQD for various stages of launch vehicle buildup. For each stage, evaluate all ESs that are within the QD arc generated by the NEWQD. If QD criteria are not violated in

the largest arc, submit an ESP for the maximum NEWQD. If QD deviations exist, the following actions are required:

V4.E5.29.9.7.4.1. **(Added)(AF)** Evacuate non-direct support personnel from an ES falling within the QD arc generated by the NEWQD. A waiver or exemption is required if the ES cannot be evacuated. **(T-1).**

V4.E5.29.9.7.4.2. **(Added)(AF)** Publish procedures to minimize risk for stage with QD deviations. Guidelines must specify:

V4.E5.29.9.7.4.2.1. **(Added)(AF)** The organization responsible for implementing risk reduction actions.

V4.E5.29.9.7.4.2.2. **(Added)(AF)** Conditions where risk reduction actions are directed and when they take place.

V4.E5.29.9.7.4.2.3. **(Added)(AF)** On-scene inspection procedures to ensure RM actions are accomplished. **(T-1).**

V4.E5.29.9.7.4.2.4. **(Added)(AF)** Facilities to be evacuated.

V4.E5.29.9.7.4.2.5. **(Added)(AF)** Critical equipment and supplies to be protected or evacuated. **(T-1).**

V4.E5.29.9.7.4.2.6. **(Added)(AF)** Procedures to ensure the program is evaluated on a recurring basis. **(T-1).**

V4.E5.29.9.7.4.3. **(Added)(AF)** On the ESP, clearly label the different QD arcs associated with the different NEWQD levels. **(T-1).**

V4.E5.29.9.8. **(Added)(AF)** Launch Center Requirements.

V4.E5.29.9.8.1. **(Added)(AF)** Launch Center. In general, the Air Force is moving away from the use of hardened blockhouses located at launch complexes in favor of soft, remote launch control centers. Until all operations requiring on-site manning in the launch center during launch are moved to remote locations, ensure launch center personnel are protected to a reasonable degree of safety. In the event of detonation of a launch vehicle on the launch pad or shortly after lift-off, the launch center must be able to withstand a direct impact of the largest expected amount of explosive debris and also the over-pressure resulting from the initial explosion and from subsequent explosions of firebrands landing nearby.

V4.E5.29.9.8.2. **(Added)(AF)** Test Control Launch Center. Launch Centers for static test stands can either be unprotected facilities at K-24 for the maximum propellant load, or be hardened facilities capable of providing K-24 overpressure protection and fragment protection from the maximum propellant load.

Table V4.E5.T13. (Added)(AF) Minuteman TNT Equivalencies.

Stage	HD	NEWQD	TNT Factor	TNT Equivalency
I (F&G)	1.3	45,800	NA	NA
I (F&G)	1.3	45,800	.035	1600(1)
II (F&G)	1.3	13,680	NA	NA
II (F&G)	1.3	13,680	.152	2100(1)
III (F)	1.1	3671	1.01	3700(1)
III (G)	1.3	7281	NA	NA
III (G)	1.3	7281	.506	3700(1)

Note: **(Added)(AF)**

1. **(Added)(AF)** These equivalencies apply to LGM 30 Minuteman motors, whether assembled into a set or stored separately, when an HD 1.1 initiator is present.

VOLUME 5: QD CRITERIA FOR INTENTIONAL BURNS OR DETONATIONS, ENERGETIC LIQUIDS, AND UNDERGROUND STORAGE

V5.1. INTRODUCTION. This volume provides QD criteria for intentional burns or detonations, energetic liquids, and underground storage.

VOLUME 5 – ENCLOSURE 1: REFERENCES

See References section at the end of the manual.

VOLUME 5 – ENCLOSURE 2: RESPONSIBILITIES

See Volume 1 – Enclosure 2.

VOLUME 5 – ENCLOSURE 3: AREAS USED FOR INTENTIONAL BURNS AND DETONATIONS

V5.E3.1. LOCATIONS USED FOR INTENTIONAL BURNS OF AE OR STATIC FIRING OF MOTORS. Criteria in this section are provided for intentional burns or static motor firing requiring siting in accordance with this manual. The required QD is based only on the AE's energetic reaction (thermal, blast overpressure, and fragmentation). These QD requirements do not consider the toxicity, noise, or potential down-wind hazards. Therefore, QD may not be the only factor that needs to be considered when selecting a location for intentional burning or static motor firing.

V5.E3.1. **(Added)(AF)** Treat items that have not been hazard classified IAW with TO 11A-1-47 as HD 1.1 for application of the criteria in this section. Check with installation environmental management function for environmental compliance and Resource Conservation and Recovery Act (RCRA) requirements and need for permits for this operation. For overseas locations, ensure actions are consistent with international agreements and does not conflict with applicable host-nation environmental Final Governing Standards or DoDI 4715.05 or check SOFA and applicable technical agreements for any applicable environmental protection standards.

V5.E3.1.1. General

V5.E3.1.1.1. The QD criteria for siting of intentional burns or static motor firing apply from the moment of initiation through the duration of the burning operation. Prior to the actual burning or static motor firing event, operations may proceed using unintentional detonation QD.

V5.E3.1.1.2. The criteria in section **V5.E3.1.** are based on the potential for an unintended transition of a burning reaction to a reaction greater than burning (up to and including detonation of all the explosives present). The key to minimizing the potential for reactions greater than burning is to limit the depth of explosives (or size of a block or container of explosives) so that it is insufficient to "confine" the reaction. Minimizing the total amount of explosives being burned at any given time will also minimize the potential damage in the event of a reaction greater than burning.

V5.E3.1.1.3. The criteria in section **V5.E3.1.** do not address the hazards associated with burning AE or static firing of motors inside a structure; the appropriate criteria for these situations must be addressed on a case-by-case basis to determine if the structural confinement increases the potential for a reaction greater than burning, and address potential secondary debris hazards.

V5.E3.1.2. Protective Construction. DDESB-approved protective structures or measures to suppress thermal, blast, or fragment effects may be used to reduce the required MSD (see DDESB Technical Paper 15 for protective structures or measures previously approved by the DDESB). Protective construction analyses may also be used to reduce the required MSD. Submit analyses with the explosives safety site plan and demonstrate protection as specified in section **V1.E9.3.** for essential personnel, or protection equivalent to the criteria in paragraph

V5.E3.1.6. for non-essential personnel. Analyses intended to justify a reduced MSD should consider the actual composition, configuration, properties, characteristics, behaviors, etc., of the material to be burned, and the potential for and severity of reactions other than burning.

V5.E3.1.2.1. **(Added)(AF)** Non-combustible Construction. Construct exterior walls and roof coverings of explosives building out of non-combustible materials. Use non-combustible material for interior surfaces of explosives buildings (see UFC 3-600-01). If it is necessary to use combustion-supporting materials in the interior of an explosives building, treat or cover all exposed surfaces with fire-retardant material. This paragraph does not apply to licensed explosives storage locations, and locations involving explosives operations not requiring explosives siting.

V5.E3.1.2.2. **(Added)(AF)** Outdoor Explosives Storage Sites. This paragraph does not apply to licensed explosives storage locations and locations involving explosives operations not requiring explosives siting. Provide nonflammable or fire-resistant, waterproofed, overhead covers for packaged explosive items unless the item is contained in packing designed and approved for unprotected outside storage. There must be at least 18 inches between the top of the stack and the cover. **(T-1).** If airspace is kept between the cover and the stacks, the sides of covered stacks may be protected by nonflammable or fire-resistant, waterproof covers.

V5.E3.1.2.3. **(Added)(AF)** Stairways. Stairways will conform to AFMAN 91-203 and NFPA 101 requirements. **(T-0).**

V5.E3.1.2.4. **(Added)(AF)** Magazine Ventilation and Vermin-Resistance.

V5.E3.1.2.4.1. **(Added)(AF)** Do not install ventilators in 3-bar or 7-bar rated ECM designs unless allowed by the DDESB approved definitive design drawing to ensure the ECM's strength rating is not affected.

V5.E3.1.2.4.2. **(Added)(AF)** Magazine vents (when installed or repaired) must prevent the entry of sparks and burning embers, or have fusible links to close the vents when an outside fire threatens the magazine. **(T-1).** Where fusible links are installed, leave unpainted, and ensure they are serviceable, properly installed, and rated for a maximum temperature of 155 °F to 165 °F (68.3 °C to 73.8 °C) (NSN 4210-00-033-6032 or suitable substitute). Existing magazine vents that do not prevent the entry of sparks and burning embers may continue to be used until repaired or replaced; however, it is strongly recommended that these vents be evaluated by civil engineering (base fire marshal or designate) for their ability to prevent the entry of sparks and burning embers.

V5.E3.1.2.5. **(Added)(AF)** Exits. Use the ANSI Safety Code A156.3 and NFPA 101 as a guide in constructing emergency exits and fire escapes. Use UFC 3-600-01 for the construction requirements of fire walls. For openings through fire walls use NFPA 80 and NFPA 221. Refer to AFMAN 91-203, the Installation Fire Marshall, and Occupational Safety to determine the number and type of exits required for the facility.

V5.E3.1.2.5.1. **(Added)(AF)** ECM doors are not authorized for new construction projects used as operating locations or for existing ECMs converted to use as operating locations.

Existing operating locations using ECM doors may be grandfathered if the ESP has been formerly approved by the DDESB or AFSEC/SEW.

V5.E3.1.2.6. **(Added)(AF)** Design and Operation of Collection Systems. Use NFPA 70, NFPA 400, NFPA 652, and AFMAN 91-203 for the design and operation of collection systems.

V5.E3.1.2.7. **(Added)(AF)** Water Supply for Explosives Manufacturing Areas and Loading Plants. Install an outside, underground, looped system of mains. The water distribution system will meet the requirements of UFC 3-600-01 and the NFPA 1142. **(T-1).** Mains will not extend under explosives locations. **(T-1).**

V5.E3.1.2.8. **(Added)(AF)** Automatic Sprinkler Systems. When explosives facilities are placarded for "Apply No Water", automatic sprinkler systems will only be disabled after a risk assessment has been accomplished and approved by the local fire chief. **(T-1).** If the risk assessment indicates the continued use of the automatic system is appropriate (e.g., to keep a potential fire from reaching the explosives items), the presence of the "Apply No Water" and an operable automatic sprinkler system does not constitute a deviation of this standard. In all cases, the audible warning device must remain operable. **(T-1).**

V5.E3.1.2.9. **(Added)(AF)** Deluge Systems. Machinery or operations in which there is a process fire hazard will have an auto deluge system as required by an engineering study. **(T-1).** Use NFPA 70, NFPA 13, and NFPA 16 for the design and requirements of a deluge system.

V5.E3.1.2.10. **(Added)(AF)** Monitoring of Design of Explosives Facilities. Weapons Safety and Civil Engineering must jointly ensure the design requirements of Volume 1 and Volume 2 are properly incorporated into design specifications (to include the statement of work when design and construction efforts are being contracted) and as-built drawings for new explosives facilities. **(T-1).** Additionally, those requirements that apply to nuclear weapon storage, maintenance, and handling facilities as defined in AFMAN 91-118 must also be addressed in construction planning of new facilities for these purposes. **(T-1).**

V5.E3.1.2.11. **(Added)(AF)** Monitoring of Construction of Explosives Facilities. In regards to the actual construction of explosives facilities, Weapons Safety and Civil Engineering must jointly:

V5.E3.1.2.11.1. **(Added)(AF)** Ensure compliance with the final approved construction drawings with regard to design requirements driven by explosives safety considerations. **(T-1).**

V5.E3.1.2.11.2. **(Added)(AF)** Ensure any changes that affect explosives safety considerations are reflected on the as-built drawings and the ESP updated if necessary. **(T-1).**

V5.E3.1.2.11.3. **(Added)(AF)** Ensure that the actual construction location of sited explosives facilities complies with the approved ESP. **(T-1).**

V5.E3.1.2.11.4. **(Added)(AF)** Ensure temporary construction workers are provided protection from explosives in nearby facilities per paragraph **V3.E3.1.1.2.2.6. (T-1).**

V5.E3.1.2.11.5. **(Added)(AF)** Ensure explosives in nearby facilities are protected from temporary construction operations. Give consideration to fire hazards and RF hazards. **(T-1).**

V5.E3.1.3. NEW. The criteria in section **V5.E3.1.** are applied based on NEW versus NEWQD. The total NEW present must be used for QD calculations, unless IMD (based on the HD) is met between burning locations. There is no requirement to adjust the NEW to address trinitrotoluene (TNT) equivalency. However, if done, address TNT equivalency in accordance with paragraphs **V5.E3.1.3.1.** and **V5.E3.1.3.2.**

V5.E3.1.3.1. Overpressure Calculations. If known, TNT equivalencies greater than 1 may be applied to the NEW. Use of TNT equivalencies of less than 1 require supporting data.

V5.E3.1.3.2. Fragment Distance Calculations. Do not make adjustment for TNT equivalency when determining the HFD in accordance with paragraph **V5.E3.1.6.** except when doing an item-specific calculation in accordance with DDESB Technical Paper 16.

V5.E3.1.4. Damaged AE. Damaged AE refers to damage that could significantly increase the likelihood of a reaction more severe than burning (i.e., an explosion or detonation) occurring. For example, cracked propellant in a motor or a damaged motor case might easily lead to a pressure rupture of the motor case. For burning of damaged HD 1.1, HD 1.2, or HD 1.3 AE, or the static firing of damaged HD 1.1 or HD 1.3 motors, apply the intentional detonation criteria of section **V5.E3.2.** unless an analysis is provided to show that the AE configuration cannot transition to a reaction greater than burning.

V5.E3.1.4. **(Added)(AF)** If the condition of an item is unknown, assume it to be damaged.

V5.E3.1.5. Essential Personnel MSD. Use K-factor English system (K)24 [K-factor metric system (K_m) 9.52] in the QD formula for the NEW to determine the MSD for personnel burning HD 1.1, HD 1.2, HD 1.3, or HD 1.4 AE, or static firing of HD 1.1 or HD 1.3 motors. The K24 [K_m 9.52] distance only provides protection for blast and thermal hazards in accordance with section **V1.E9.3.** K24 [K_m 9.52] may not provide protection, especially for small NEWs, from fragments or debris from an unintentional reaction, or even from other projections or firebrands generated by the intentional burning. The DoD Component may require distances greater than K24 [K_m 9.52] based on the hazards associated with the specific burning operation.

V5.E3.1.6. Non-Essential Personnel MSD

V5.E3.1.6.1. Burning of HD 1.1, HD 1.2, HD 1.3, or HD 1.4 AE

V5.E3.1.6.1.1. For burning of bare AE (i.e., no fragment-producing casing or packaging), the non-essential personnel MSD is K40 [K_m 15.87] in the QD formula using the NEW with a minimum of 75 ft [22.9 m].

V5.E3.1.6.1.2. For burning of AE in packaging that may produce debris, the non-essential personnel MSD is the unintentional detonation IBD (i.e., larger of K40 [K_m 15.87] in the QD formula for overpressure or the HFD using the "Structure" column of Table **V3.E3.T2.**).

V5.E3.1.6.1.3. For burning of AE in casing that may produce primary fragments, the non-essential personnel MSD is the unintentional detonation IBD (i.e., larger of K40 [K_m 15.87] in the QD formula for overpressure or the HFD in accordance with paragraph **V3.E3.1.2.1.**).

V5.E3.1.6.2. Static Firing of HD 1.1 or HD 1.3 Motors. For static firing of HD 1.1 or 1.3 motors, the non-essential personnel MSD is the unintentional detonation IBD (i.e., larger of K40 [K_m 15.87] in the QD formula for overpressure or the HFD in accordance with paragraph **V3.E3.1.2.1.**). The DoD Component will address directional effects from static firing of motors.

V5.E3.1.6.2.1. **(Added)(AF)** AF directional effects requirement: The organization conducting static firing will address flame exposure area and directional effects (e.g., structural analysis of the restraint system or device). **(T-1).** This analysis will be included with the ESP submission. **(T-1).**

V5.E3.1.7. Other Applicable QD

V5.E3.1.7.1. Control Sites. Site at essential personnel MSD from the intentional burning or static motor firing area. Site at a minimum of ILD from other PESs.

V5.E3.1.7.2. Locations Used for Intentional Burns or Static Motor Firing

V5.E3.1.7.2.1. Prior to actual burning or static motor firing, site the location as an AE operating location using the unintentional detonation QD criteria (based on the HD).

V5.E3.1.7.2.2. During burning or static motor firing, apply non-essential personnel MSD to personnel conducting unrelated AE operations unless the DoD Component approves the use of essential personnel MSD.

V5.E3.2. LOCATIONS USED FOR INTENTIONAL DETONATIONS. Criteria in this section are provided for intentional detonations requiring siting in accordance with this manual. The required QD are only based on the AE's energetic reaction (thermal, blast overpressure and fragmentation). These QD requirements do not consider the groundshock, toxicity, noise, or potential down-wind hazards. Therefore, QD may not be the only factor that needs to be considered when selecting a location for intentional detonations.

V5.E3.2. **(Added)(AF)** This section does not apply to EOD emergency operations, or range clearance operations where the expected blast and fragmentation effects does not exceed existing range surface danger zones as defined in AFMAN 13-212V1. Check with installation environmental management function for environmental compliance and RCRA requirements and need for permits for this operation. For overseas locations, ensure actions are consistent with international agreements and does not conflict with applicable host-nation environmental Final

Governing Standards or DoDI 4715.05 or SOFA and applicable technical agreements for any applicable environmental protection requirements.

V5.E3.2.1. General. The QD criteria for siting of intentional detonations apply from the moment of initiation through the duration of the detonation operation. Prior to the actual detonation event, operations may proceed using unintentional detonation QD.

V5.E3.2.2. Intentional Detonation of HDs Other than HD 1.1. All AE must be considered as HD 1.1 when intentionally detonated.

V5.E3.2.3. Vent to Burn. Vent to burn operations involve placing explosive cutting charges on an item for the purpose of opening the munition casing to remove confinement and then allow burning of the explosive fill. Vent to burn operations may result in a detonation reaction of all the explosive fill present. Site vent to burn operations as an intentional detonation of the total NEW (donor charges and explosive fill). Lesser criteria, based on an expected reaction of less than a detonation reaction of all the explosive fill present, may be applied for siting based on the hazards from the expected reaction provided there is sufficient analysis or testing data to demonstrate a vent to burn operation can be done reliably to obtain the expected reaction.

V5.E3.2.4. NEW. The criteria in section **V5.E3.2.** are applied based on NEW versus NEWQD. The total NEW present (to include donor material) must be used for QD calculations, unless IMD (based on HD 1.1 criteria) is met between detonation locations or separation by time is used to ensure the blast waves do not coalesce (see paragraph **V1.E7.3.2.1.** for separation by time criteria). There is no requirement to adjust the NEW to address TNT equivalency. However, if TNT equivalency is addressed, it should be done in accordance with paragraphs **V5.E3.2.4.1.** and **V5.E3.2.4.2.**

V5.E3.2.4.1. Overpressure Calculations. If known, TNT equivalencies greater than 1 may be applied to the NEW. Use of TNT equivalencies of less than 1 require supporting data.

V5.E3.2.4.2. Fragment Distance Calculations. Adjustment for TNT equivalency must not be made when determining the MFD in accordance with paragraph **V5.E3.2.7.** except when doing an item-specific calculation in accordance with DDESB Technical Paper 16.

V5.E3.2.5. Essential Personnel MSD. Essential personnel MSD must be the same as the non-essential personnel MSD in accordance with paragraph **V5.E3.2.6.**, or must provide personnel protection from fragment, thermal, overpressure, noise, and other hazards in accordance with paragraph **V1.E9.3.2.** However, if the DoD Component determines that greater risk is required for a military training operation (i.e., the risk decision overrides the essential personnel MSD because the training benefits outweigh the risks), or EOD operations (see paragraph **V5.E3.2.11.2.** for EOD operations), the DoD Component must implement a risk management program in accordance with DoDI 6055.01 to ensure the safety of DoD personnel in training. If the criteria of paragraph **V1.E9.3.2.** are applied, greater distances may still be required by the DoD Component based on the hazards associated with the specific intentional detonation operation.

V5.E3.2.5. **(Added)(AF)** On-site authorities, with the advice from EOD, will designate essential personnel. **(T-1).** Use TO 60A-1-1-4 to determine personnel protection for essential personnel involved in EOD operations; contact AFCEC/CXD for specific guidance.

V5.E3.2.6. Non-Essential Personnel MSD. The MSD from a location used for intentional detonations to non-essential personnel is determined in accordance with paragraphs **V5.E3.2.6.1.** through **V5.E3.2.6.3.**

V5.E3.2.6.1. Intentional Detonations in the Open. For intentional detonations in the open (unmitigated by any protective structures or measures), MSD for non-essential personnel is:

V5.E3.2.6.1.1. For non-fragmenting AE, use the larger of:

V5.E3.2.6.1.1.1. A minimum distance of 200 ft [61 m]. If known, a maximum debris throw distance with a safety factor determined by the DoD Component may be used to replace this minimum distance. This minimum distance is not required if the surface and subsurface to a depth of 0.5 ft [0.15 m] below the detonation is prepared to be free of rocks or other debris that might be ejected (e.g., a sand line). Certain procedures or reduced QD configurations approved by the DDESB do not require this minimum distance to be applied.

V5.E3.2.6.1.1.2. The distance determined by applying K328 [K_m 130.1].

V5.E3.2.6.1.2. For fragmenting AE, use the larger of:

V5.E3.2.6.1.2.1. A minimum distance of 200 ft [61 m]. This minimum may be reduced or eliminated in accordance with paragraph **V5.E3.2.6.1.1.1.**

V5.E3.2.6.1.2.2. The distance determined by applying K328 [K_m 130.1].

V5.E3.2.6.1.2.3. The MFD as specified in paragraph **V5.E3.2.7.** For explosives safety siting purposes, the MFD is based on the horizontal distance that fragments may travel. If desired for operational purposes (e.g., to determine required airspace closure), the maximum distance that fragments may travel vertically can be determined using DDESB Technical Paper 16.

V5.E3.2.6.2. Intentional Detonations Using Protective Structures or Measures. Protective structures for personnel or measures to suppress explosion effects, to include chambers designed for intentional detonations or burial in either soil or water, may be used to reduce the required MSD for non-essential personnel. Testing may also be used to reduce the required MSD for non-essential personnel. Protective construction analyses or supporting test data must be submitted with the explosives safety site plan and demonstrate personnel protection as specified in paragraph **V5.E3.2.6.2.1.** A list of previously approved protective structures and measures to suppress explosion effects may be found in DDESB Technical Paper 15. For intentional detonations when such structures or measures are used, the MSD for non-essential personnel in paragraph **V5.E3.2.6.2.1.** or **V5.E3.2.6.2.2.** applies.

V5.E3.2.6.2.1. For protective structures or measures other than burial, perform analyses or testing to determine the MSD required to provide non-essential personnel protection equivalent to K328 [K_m 130.1] distance (i.e., overpressure no greater than 0.066 psi [0.455 kPa]) for overpressure hazards and to provide protection from all fragments and debris. If the protective structure or measure is at the detonation site, then the distance necessary to provide fragment and debris protection must be the larger of the maximum mitigated primary fragment distance or maximum secondary debris distance. If the protective structure or measure is at the ES, then it must be shown that any fragments or debris that reach the ES will not perforate the structure and that the structure will not produce any hazards (e.g., spall, debris, structural failure due to overpressure) to the ES occupants.

V5.E3.2.6.2.2. For buried intentional detonations (e.g., tamping by either water or soil), perform an analysis to determine the MSD required to provide non-essential personnel protection equivalent to K328 [K_m 130.1] distance for overpressure hazards in the open air, and to provide protection from all fragments and debris. The Buried Explosion Module as described in DDESB Technical Paper 16 may be used to determine the required distances for situations where it is applicable.

V5.E3.2.6.3. Intentional Detonations Involving Structures or Equipment that May Contribute Debris. There are situations where an intentional detonation is performed on or inside a structure (other than a protective structure) or piece of equipment, such as bridge demolition, combat engineer vehicle destruction, structural debris testing, etc. Such structures or equipment may contribute a debris hazard that is not addressed by the criteria in section **V5.E3.2.** DoD Components must assess these situations on a case-by-case basis to determine the required MSD to protect personnel from the debris hazard. The criteria in paragraph **V5.E3.2.6.1.** still apply.

V5.E3.2.7. MFD. The MFD for a single AE item in the open initiated in its design mode is determined by one of the methods described in paragraphs **V5.E3.2.7.1.** through **V5.E3.2.7.3.** See paragraph **V5.E3.2.8.** for non-design mode initiation, and paragraph **V5.E3.2.9.** for multiple item initiation.

V5.E3.2.7.1. A measured maximum fragment throw distance obtained from item-specific testing, with a safety factor determined by the DoD Component.

V5.E3.2.7.2. The greater of the two distances given in Tables **V5.E3.T1.** or **V5.E3.T2.** for the MFD. The maximum diameter and maximum NEW may be from different items. The equations on which these tables are based have been automated in the Generic Equations Calculator as described in DDESB Technical Paper 16. The limitations associated with the distances in these tables are discussed in paragraph **V5.E3.2.7.4.** and detailed in DDESB Technical Paper 16.

V5.E3.2.7.3. An item-specific calculation in accordance with DDESB Technical Paper 16. Calculated MFDs for selected munitions are given in the Fragmentation Database associated with DDESB Technical Paper 16; the Fragmentation Database is located on the DDESB secure webpage at www.ddesb.pentagon.mil. The limitations associated with these distances are discussed in paragraph **V5.E3.2.7.4.** and detailed in DDESB Technical Paper 16.

V5.E3.2.7.4. The distances as determined in accordance with paragraph **V5.E3.2.7.2.** and **V5.E3.2.7.3.** are subject to the following limitations:

V5.E3.2.7.4.1. These distances are for cylindrical munitions; non-cylindrical munitions must be evaluated on a case-by-case basis.

V5.E3.2.7.4.2. These distances do not consider fragments that are produced by sections of nose plugs, base plates, boattails or lugs. These fragments are sometimes referred to as "rogue" fragments. Rogue fragments can travel significantly greater distances (> 10,000 ft [3,048 m]). Care must be taken either to properly orient the munition (e.g., lugs or strongbacks and nose or tail plate sections oriented away from personnel locations), or to minimize or eliminate the hazard of rogue fragments (e.g., sand bagging the munition prior to detonation).

Table V5.E3.T1. Default Maximum Case Fragment Distances Versus Diameter for Intentional Detonations[a, b, c]

Diameter	MFD		
	Robust[d]	Extremely Heavy Case[e]	Non-robust[f]
(in)	(ft)	(ft)	(ft)
[mm]	*[m]*	*[m]*	*[m]*
0.2	Footnote a	Footnote a	126
5.08			*38.3*
0.3			183
7.62			*55.8*
0.4			237
10.16			*72.2*
0.5	414		287
12.70	*126.2*		*87.5*
0.6	480		335
15.24	*146.3*		*102.1*
0.7	543		380
17.78	*165.6*		*115.9*
0.8	604	628	424
20.32	*184.2*	*191.3*	*129.1*
0.9	663	683	465
22.86	*202.1*	*208.1*	*141.8*
1.0	720	736	505
25.40	*219.5*	*224.3*	*154.0*
1.5	984	981	687
38.10	*299.8*	*298.9*	*209.5*
2.0	1,220	1,202	846
50.80	*371.8*	*366.3*	*257.9*
2.5	1,437	1,407	989
63.50	*438.1*	*428.9*	*301.3*
3.0	1,640	1,602	1,119
76.20	*499.8*	*488.2*	*341.0*
3.5	1,831	1,788	1,239
88.90	*557.9*	*544.9*	*377.5*
4.0	2,012	1,968	1,350
101.60	*613.1*	*599.7*	*411.6*
4.5	2,184	2,142	1,455
114.30	*665.7*	*653.0*	*443.6*
5.0	2,349	2,312	1,554
127.00	*716.0*	*704.8*	*473.8*
5.5	2,508	2,479	1,648
139.70	*764.5*	*755.6*	*502.4*

Table V5.E3.T1. Default Maximum Case Fragment Distances Versus Diameter for Intentional Detonations,[a, b, c] Continued

Diameter	MFD		
	Robust[d]	Extremely Heavy Case[e]	Non-robust[f]
(in)	(ft)	(ft)	(ft)
[mm]	*[m]*	*[m]*	*[m]*
6.0	2,662	2,642	1,738
152.40	*811.2*	*805.4*	*529.6*
6.5	2,810	2,803	1,823
165.10	*856.4*	*854.4*	*555.6*
7.0	2,953	2,962	1,905
177.80	*900.1*	*902.7*	*580.5*
7.5	3,093	3,118	1,983
190.50	*942.6*	*950.4*	*604.4*
8.0	3,228	3,272	2,059
203.20	*984.0*	*997.4*	*627.5*
8.5	3,360	3,425	2,131
215.90	*1,024.2*	*1,044.0*	*649.7*
9.0	3,489	3,577	2,202
228.60	*1,063.5*	*1,090.2*	*671.1*
9.5	3,615	3,727	2,270
241.30	*1,101.8*	*1,135.9*	*691.8*
10.0	3,738	3,875	2,336
254.00	*1,139.3*	*1,181.3*	*711.9*
10.5	3,858	4,023	2,400
266.70	*1,175.9*	*1,226.3*	*731.4*
11.0	3,976	4,170	2,462
279.40	*1,211.8*	*1,271.0*	*750.3*
11.5	4,092	4,316	2,522
292.10	*1,247.0*	*1,315.5*	*768.8*
12.0	4,205	4,461	2,581
304.80	*1,281.6*	*1,359.7*	*786.7*
12.5	4,316	4,605	2,638
317.50	*1,315.4*	*1,403.6*	*804.1*
13.0	4,425	4,748	2,694
330.20	*1,348.7*	*1,447.4*	*821.1*
13.5	4,532	4,891	2,749
342.90	*1,381.4*	*1,490.9*	*837.8*
14.0	4,638	5,033	2,802
355.60	*1,413.6*	*1,534.3*	*854.0*
14.5	4,742	5,175	2,854
368.30	*1,445.2*	*1,577.5*	*869.8*

Table V5.E3.T1. Default Maximum Case Fragment Distances Versus Diameter for Intentional Detonations,[a, b, c] Continued

Diameter	MFD		
	Robust[d]	Extremely Heavy Case[e]	Non-robust[f]
(in)	(ft)	(ft)	(ft)
[mm]	*[m]*	*[m]*	*[m]*
15.0	4,844	5,316	2,905
381.00	*1,476.3*	*1,620.5*	*885.4*
16.0	5,044	5,597	3,003
406.40	*1,537.2*	*1,706.2*	*915.4*
18.0	5,426	Footnote a	3,189
457.20	*1,653.8*		*971.9*
20.0	5,789		3,361
508.00	*1,764.5*		*1,024.4*
22.0	6,135		3,522
558.80	*1,869.9*		*1,073.5*
24.0	6,466		Footnote a
609.60	*1,970.8*		
26.0	6,784		
660.40	*2,067.6*		
28.0	7,090		
711.20	*2,160.8*		
30.0	7,385		
762.00	*2,250.7*		

a	Use of equations given in footnotes d, e, and f to determine other diameter/MFD combinations is allowed within the following diameters: 0.4355 inches [11.06 mm] up to 31.437 inches [798.50 mm] for robust munitions 0.7934 inches [20.15 mm] up to 16.0 inches [406.40 mm] for extremely heavy case munitions 0.189 inches [4.80 mm] up to 23.9 inches [607.06 mm] for non-robust munitions For lesser or greater diameters, conduct an analysis in accordance with DDESB Technical Paper 16.
b	See paragraph **V5.E3.2.7.4.** for the limitations associated with these MFDs.
c	These MFDs are for single items as described in paragraph **V5.E3.2.7.** See paragraphs **V5.E3.2.8.** and **V5.E3.2.9.** for MFDs associated with non-design mode initiation and multiple item initiation.
d	Robust munitions are defined in the Glossary.
	English Equations (EQNs) (MFD in ft, Diameter (D) in inches; ln is natural logarithm, exp [x] is e^x) $MFD = \exp[6.5796 + \{0.77975*\ln(D)\} - \{0.028054*(\ln(D))^2\}]$ EQN V5.E3.T1-1 $D = \exp[-8.05335 + \{1.52785*\ln(MFD)\} - \{0.10036*(\ln(MFD))^2\} + \{0.00823*(\ln(MFD))^3\}]$ EQN V5.E3.T1-2
	Metric EQNs (MFD in m, D in millimeters (mm); ln is natural logarithm, exp [x] is e^x)
	$MFD = \exp[2.57561 + \{0.961245*\ln(D)\} - \{0.028054*(\ln(D))^2\}]$ *EQN V5.E3.T1-3* $D = \exp[-3.13116 + \{1.32421*\ln(MFD)\} - \{0.07103*(\ln(MFD))^2\} + \{0.00823*(\ln(MFD))^3\}]$ *EQN V5.E3.T1-4*

Table V5.E3.T1. Default Maximum Case Fragment Distances Versus Diameter for Intentional Detonations,[a, b, c] Continued

e	Extremely heavy case munitions are defined in the Glossary.	
	English EQNs (MFD in ft, D in inches; ln is natural logarithm, exp [x] is e^x) MFD = exp[6.6013 + {0.7111*ln(D)} – {0.010025*$(\ln(D))^2$} + {0.0062976*$(\ln(D))^3$}] D = exp[–3.78194 – {0.945*ln(MFD)} + {0.33574*$(\ln(MFD))^2$} – {0.01601*$(\ln(MFD))^3$}]	EQN V5.E3.T1-5 EQN V5.E3.T1-6
	Metric EQNs (MFD in m, D in mm; ln is natural logarithm, exp [x] is e^x) *MFD = exp[2.794868 + {0.973643*ln(D)} – {0.071138*$(\ln(D))^2$} + {0.006298*$(\ln(D))^3$}]* *D = exp[–1.2229 – {0.21501*ln(MFD)} + {0.27866*$(\ln(MFD))^2$} – {0.01601*$(\ln(MFD))^3$}]*	*EQN V5.E3.T1-7* *EQN V5.E3.T1-8*
f	Non-robust munitions are defined in the Glossary.	
	English EQNs (MFD in ft, D in inches; ln is natural logarithm, exp [x] is e^x) MFD = exp[6.2254 + {0.77897*ln(D)} – {0.051876*$(\ln(D))^2$} + {0.00098771*$(\ln(D))^3$}] D = exp[–9.63957 + {2.92627*ln(MFD)} – {0.39665*$(\ln(MFD))^2$} + {0.02811*$(\ln(MFD))^3$}]	EQN V5.E3.T1-9 EQN V5.E3.T1-10
	Metric EQNs (MFD in m, D in mm; ln is natural logarithm, exp [x] is e^x) *MFD = exp[1.941238 + {1.145587*ln(D)} – {0.061461*$(\ln(D))^2$} + {0.000988*$(\ln(D))^3$}]* *D = exp[–3.44077 + {2.10278*ln(MFD)} – {0.29644*$(\ln(MFD))^2$} + {0.02811*$(\ln(MFD))^3$}]*	*EQN V5.E3.T1-11* *EQN V5.E3.T1-12*

Table V5.E3.T2. Default Maximum Case Fragment Distances Versus NEW for Intentional Detonations[a, b, c]

NEW	MFD		
	Robust[d]	Extremely Heavy Case[e]	Non-robust[f]
(lbs) *[kg]*	(ft) *[m]*	(ft) *[m]*	(ft) *[m]*
0.01 *0.005*	557 *169.6*	Footnote a	203 *61.9*
0.015 *0.007*	620 *188.8*		230 *70.1*
0.02 *0.009*	668 *203.6*	782 *238.4*	251 *76.5*
0.03 *0.014*	741 *225.9*	905 *276.0*	284 *86.4*
0.04 *0.018*	797 *243.0*	1,000 *304.8*	309 *94.2*
0.05 *0.023*	843 *257.0*	1,077 *328.3*	330 *100.6*

Table V5.E3.T2. Default Maximum Case Fragment Distances Versus NEW for Intentional Detonations,[a, b, c] Continued

NEW	MFD		
	Robust[d]	Extremely Heavy Case[e]	Non-robust[f]
(lbs)	(ft)	(ft)	(ft)
[kg]	*[m]*	*[m]*	*[m]*
0.06	882	1,143	348
0.027	*269.0*	*348.3*	*106.1*
0.07	917	1,200	364
0.032	*279.4*	*365.8*	*111.0*
0.08	947	1,251	378
0.036	*288.7*	*381.3*	*115.3*
0.09	975	1,297	392
0.041	*297.2*	*395.4*	*119.3*
0.1	1,000	1,339	404
0.045	*304.9*	*408.1*	*123.0*
0.15	1,103	1,507	453
0.068	*336.1*	*459.5*	*138.2*
0.2	1,181	1,633	492
0.091	*359.8*	*497.9*	*149.9*
0.3	1,298	1,821	551
0.136	*395.6*	*554.9*	*167.9*
0.4	1,387	1,960	597
0.181	*422.6*	*597.4*	*181.8*
0.5	1,459	2,072	634
0.227	*444.6*	*631.5*	*193.3*
0.6	1,520	2,165	667
0.272	*463.2*	*660.0*	*203.2*
0.7	1,573	2,246	695
0.318	*479.5*	*684.7*	*211.9*
0.8	1,620	2,318	721
0.363	*493.9*	*706.4*	*219.7*
0.9	1,663	2,381	744
0.408	*506.9*	*725.9*	*226.7*
1	1,702	2,439	765
0.454	*518.7*	*743.5*	*233.2*
1.5	1,858	2,669	852
0.680	*566.4*	*813.5*	*259.8*
2	1,976	2,839	919
0.907	*602.3*	*865.2*	*280.2*
3	2,151	3,088	1,021
1.36	*655.7*	*941.1*	*311.3*

Table V5.E3.T2. Default Maximum Case Fragment Distances Versus NEW for Intentional Detonations,[a, b, c] Continued

NEW	MFD		
	Robust[d]	Extremely Heavy Case[e]	Non-robust[f]
(lbs)	(ft)	(ft)	(ft)
[kg]	*[m]*	*[m]*	*[m]*
4	2,283	3,271	1,100
1.81	*695.8*	*997.1*	*335.2*
5	2,389	3,418	1,164
2.27	*728.1*	*1,041.9*	*354.8*
6	2,478	3,541	1,219
2.72	*755.3*	*1,079.4*	*371.5*
7	2,556	3,648	1,267
3.18	*778.9*	*1,111.8*	*386.2*
8	2,624	3,742	1,310
3.63	*799.8*	*1,140.4*	*399.3*
9	2,686	3,826	1,349
4.08	*818.6*	*1,166.0*	*411.1*
10	2,742	3,902	1,385
4.54	*835.6*	*1,189.3*	*422.0*
15	2,965	4,206	1,530
6.80	*903.7*	*1,281.9*	*466.2*
20	3,131	4,432	1,640
9.07	*954.3*	*1,350.9*	*499.9*
30	3,376	4,769	1,807
13.61	*1,029.1*	*1,453.5*	*550.9*
50	3,704	5,226	2,038
22.68	*1,128.9*	*1,592.8*	*621.3*
70	3,931	5,551	2,204
31.75	*1,198.1*	*1,691.6*	*671.7*
100	4,181	5,918	2,391
45.36	*1,274.5*	*1,803.7*	*728.8*
150	4,479	6,371	2,620
68.04	*1,365.1*	*1,941.5*	*798.5*
200	4,697	Footnote a	2,793
90.72	*1,431.7*		*851.2*
300	5,017		3,052
136.08	*1,529.1*		*930.4*
500	5,437		3,407
226.80	*1,657.2*		*1,038.5*
700	5,724		3,658
317.52	*1,744.8*		*1,115.1*
1,000	6,038		3,940
453.60	*1,840.3*		*1,201.1*

Table V5.E3.T2. Default Maximum Case Fragment Distances Versus NEW for Intentional Detonations,[a, b, c] Continued

NEW	MFD		
	Robust[d]	Extremely Heavy Case[e]	Non-robust[f]
(lbs)	(ft)	(ft)	(ft)
[kg]	*[m]*	*[m]*	*[m]*
1,500	6,405	Footnote a	4,282
680.40	*1,952.3*		*1,305.3*
2,000	6,672		Footnote a
907.19	*2,033.7*		
3,000	7,058		
1,360.8	*2,151.1*		
5,000	7,557		
2,268.0	*2,303.2*		

a	Use of equations given in footnotes d, e, and f to determine other NEW/MFD combinations is allowed within the following NEWs: 0.0039 lbs [0.00177 kg] up to 5,576 lbs [2,529.23 kg] for robust munitions 0.017 lbs [0.00771 kg] up to 153.57 lbs [69.658 kg] for extremely heavy case munitions 0.00014 lbs [0.0000635 kg] up to 1,818.7 lbs [824.95 kg] for non-robust munitions For lesser or greater NEWs, conduct an analysis in accordance with DDESB Technical Paper 16.	
b	See paragraph **V5.E3.2.7.4.** for the limitations associated with these MFDs.	
c	These MFDs are for single items as described in paragraph **V5.E3.2.7.** See paragraphs **V5.E3.2.8.** and **V5.E3.2.9.** for MFDs associated with non-design mode initiation and multiple item initiation.	
d	Robust munitions are defined in the Glossary.	
	English EQNs (MFD in ft, NEW (W) in lbs; ln is natural logarithm, exp [x] is e^x)	
	$MFD = \exp[7.4395 + \{0.21895*\ln(W)\} - \{0.005158*(\ln(W))^2\}]$	EQN V5.E3.T2-1
	$W = \exp[24.007132 - \{27.117219*\ln(MFD)\} + \{7.015604*(\ln(MFD))^2\} - \{0.731353*(\ln(MFD))^3\} + \{0.029567*(\ln(MFD))^4\}]$	EQN V5.E3.T2-2
	Metric EQNs (MFD in m, NEW (W) in kg; ln is natural logarithm, exp [x] is e^x)	
	$MFD = \exp[6.421256 + \{0.210793*\ln(W)\} - \{0.005158*(\ln(W))^2\}]$	*EQN V5.E3.T2-3*
	$W = \exp[-0.266748 - \{13.345037*\ln(MFD)\} + \{4.659175*(\ln(MFD))^2\} - \{0.590832*(\ln(MFD))^3\} + \{0.029567*(\ln(MFD))^4\}]$	*EQN V5.E3.T2-4*
e	Extremely heavy case munitions are defined in the Glossary.	
	English EQNs (MFD in ft, NEW (W) in lbs; ln is natural logarithm, exp [x] is e^x)	
	$MFD = \exp[7.7995 + \{0.22669*\ln(W)\} - \{0.012281*(\ln(W))^2\} + \{0.0010527*(\ln(W))^3\}]$	EQN V5.E3.T2-5
	$W = \exp[96.485092 - \{94.67555*\ln(MFD)\} + \{32.536212*(\ln(MFD))^2\} - \{5.396168*(\ln(MFD))^3\} + \{0.437587*(\ln(MFD))^4\} - \{0.013731*(\ln(MFD))^5\}]$	EQN V5.E3.T2-6
	Metric EQNs (MFD in m, NEW (W) in kg; ln is natural logarithm, exp [x] is e^x)	
	$MFD = \exp[6.78344 + \{0.20924*\ln(W)\} - \{0.00978*(\ln(W))^2\} + \{0.00105*(\ln(W))^3\}]$	*EQN V5.E3.T2-7*
	$W = \exp[20.925556 - \{37.414068*\ln(MFD)\} + \{16.778*(\ln(MFD))^2\} - \{3.510333*(\ln(MFD))^3\} + \{0.356015*(\ln(MFD))^4\} - \{0.013731*(\ln(MFD))^5\}]$	*EQN V5.E3.T2-8*

Table V5.E3.T2. Default Maximum Case Fragment Distances Versus NEW for Intentional Detonations,[a, b, c] Continued

f	Non-robust munitions are defined in the Glossary.	
	English EQNs (MFD in ft, NEW (W) in lbs; ln is natural logarithm, exp [x] is e^x)	
	MFD = exp[6.6402 + {0.26763*ln(W)} – {0.0043986*(ln(W))^2}]	EQN V5.E3.T2-9
	W = exp[–22.259 + {4.2565*ln(MFD)} – {0.3319*(ln(MFD))^2} + {0.0294*(ln(MFD))^3}]	EQN V5.E3.T2-10
	Metric EQNs (MFD in m, NEW (W) in kg; ln is natural logarithm, exp [x] is e^x)	
	*MFD = exp[5.6609 + {0.2607*ln(W)} – {0.0044*(ln(W))^2}]*	*EQN V5.E3.T2-11*
	*W = exp[–18.411 + {3.5925*ln(MFD)} – {0.227*(ln(MFD))^2} + {0.0294*(ln(MFD))^3}]*	*EQN V5.E3.T2-12*

V5.E3.2.7.4.3. These distances do not consider the shaped charge jets or slugs from directed energy munitions which can travel significantly greater distances than case fragments. Therefore, unless the shape charge jet or slug is intentionally disrupted as part of the initiation procedure or the shape charge is directed or positioned in a manner to restrict travel (e.g., directed downward or sandbagged), these munitions require specific analysis or test data to determine the MSD for non-essential personnel.

V5.E3.2.7.4.4. Maximum primary fragment distance prediction methods rely on certain assumptions and limitations, and cannot always account for the occasional fragment that behaves in an unpredictable manner. Consequences of fragment impacts outside the predicted range should be a consideration when siting intentional detonation sites, and if such consequences are unacceptable then fragment containment should be considered. There is a low probability that a fragment might assume a reduced-drag configuration and fly to significantly greater distances than can be predicted. Current QD procedures cannot address such low-probability events.

V5.E3.2.8. Non-Design Mode Initiation. A non-design mode initiation is any means of initiating the AE other than through the designed explosive train. Packing the fuze well with HEs would be considered a design mode initiation. Non-design mode initiations may cause larger and faster fragments to form which can travel farther, and the MFD determined in accordance with paragraph **V5.E3.2.7.** must be increased by 33% unless specific measures are taken to mitigate this effect. Such mitigation measures may include: 1) ECs such as burial or sandbagging, 2) initiation methods intended to mitigate fragment effects such as placing the donor explosives along the top of the munition to drive the fragments downward, 3) methods approved through analysis or testing, or 4) other established or DoD-published explosive demilitarization methods. It is not necessary to use both the 33% increase for non-design mode initiation and the 33% increase described in paragraph **V5.E3.2.9.1.** for multiple item initiation.

V5.E3.2.9. Multiple Item Initiation

V5.E3.2.9.1. Interaction and "Jetting" Effects. When multiple AE items are placed in close proximity and detonated there are interaction and "jetting" effects in the area between the items. This may result in larger and faster fragments which can travel farther. Examples of when

these effects can occur include but are not limited to items which are detonated in a vertical packaged configuration such as 155 mm projectiles during an SD test or detonations involving items stacked in multiple layers of horizontally oriented munitions. The MFD determined in accordance with paragraph **V5.E3.2.7.** must be increased by 33% unless specific measures are taken to mitigate these effects. Such measures may include: 1) orienting the items horizontally and placing them in a single layer (such that any interaction effects are in the vertical direction), 2) ECs or methods approved through analysis or testing, or 3) other established or DoD-published explosive demilitarization methods. It is not necessary to use both the 33% increase for multiple item initiation and the 33% increase described in paragraph **V5.E3.2.8.** for non-design mode initiation.

V5.E3.2.9.2. Mixed Munitions. If the detonation involves mixed munitions (e.g., 20 mm projectiles and 75 mm projectiles), determine the MFD for each model of munition separately using the procedures in paragraph **V5.E3.2.7.** and select the largest single item distance. Then apply the appropriate multiple item initiation increase factor in accordance with paragraph **V5.E3.2.9.1.** to that single item distance unless measures are taken to mitigate the interaction and "jetting" effects in accordance with paragraph **V5.E3.2.9.1.**

V5.E3.2.10. Other Applicable QD

V5.E3.2.10.1. Separation of Intentional Detonation Sites. Provide a minimum of IMD between intentional detonation sites, unless the QD calculations are based on siting of the total NEW present (to include donor material) or separation by time is used to ensure the blast waves do not coalesce (see paragraph **V1.E7.3.2.1.** for separation by time criteria). Intentional detonation sites may not operate simultaneously (i.e., have personnel at one site while a detonation occurs at the other site) unless separated by non-essential personnel MSD.

V5.E3.2.10.2. Control Site. Site at essential personnel MSD from the intentional detonation site; see paragraph **V5.E3.2.5.**, which allows application of the reduced criteria in paragraph **V1.E9.3.2.**, for essential personnel MSD. Site at a minimum of ILD from other PESs.

V5.E3.2.10.3. Intentional Detonation Site Holding Area. Intentional detonation site holding areas are designated locations at which explosives to be detonated and/or donor explosives are stored prior to use at the intentional detonation site. Temporary staging (e.g., for the length of the operations) of AE in support of an intentional detonation is not considered a holding area and does not require siting; however, the DoD Component must establish procedures to address the safety for such AE staging areas.

V5.E3.2.10.3. **(Added)(AF)** A holding area does not require siting if the established clear zone for the staging area falls within the range's unintentional detonation IBD or established surface danger zones prescribed in AFMAN 13-212V1. When establishing these sites, they will meet IMD separation between multiple holding areas and follow the guidance specified in paragraph **V5.E3.2.10.3.1. (T-1).**

V5.E3.2.10.3.1. Separation to and from the Intentional Detonation Site. If it is not planned to have AE at the holding area during the detonation, then no QD separation is required to or from the intentional detonation site. If AE remains at the holding area during the

detonation, a minimum of IMD must be applied to and from the intentional detonation site. The DoD Component may require a greater separation to minimize the risk of propagation of the explosion event from the intentional detonation site to the holding area, or to provide protection to the holding area structure if there is one.

V5.E3.2.10.3.2. Separation to and from Other PESs or ESs. ILD is required to the control site. Site as an AE storage location with regard to other PESs or ESs.

V5.E3.2.10.4. Intentional Detonation Site (Other Than for MRS)

V5.E3.2.10.4.1. Separation to the Control Site. See paragraph **V5.E3.2.10.2.** for separation to the control site.

V5.E3.2.10.4.2. Separation to and from the Intentional Detonation Site Holding Area. See paragraph **V5.E3.2.10.3.1.** for separation to and from the intentional detonation site holding area.

V5.E3.2.10.4.3. Separation to and from Other PESs or ESs. Residual risk to any unoccupied exposures (e.g., buildings, PTRs, power lines) inside the non-essential personnel MSD must be accepted by the DoD Component or owner of the structure or asset.

V5.E3.2.10.4.3.1. Other PESs.

V5.E3.2.10.4.3.1.1. A minimum of ILD must be applied from the intentional detonation site to other PESs to prevent direct propagation of an explosion event. The DoD Component may require a greater separation to minimize the risk of indirect propagation of the explosion event (e.g., via fire or kickouts) from the intentional detonation site to the other PES, or to provide protection to the other PES structure.

V5.E3.2.10.4.3.1.2. Apply a minimum of ILD from other PESs to an intentional detonation site.

V5.E3.2.10.4.3.1.3. PESs (e.g., ECMs, AGMs, AE operation locations) within the non-essential personnel MSD must not be occupied during the actual detonation unless protective structures or measures are used in accordance with paragraph **V5.E3.2.6.2.**

V5.E3.2.10.4.3.2. Power Lines. Power lines must be located at the greater of K40 [K_m 15.87] or MFD from an intentional detonation site unless the risk is accepted in accordance with paragraph **V5.E3.2.10.4.3.**

V5.E3.2.10.4.3.2. **(Added)(AF)** From the detonation area to underground utilities, use K18 with a minimum distance of 100 feet. **(T-1).**

V5.E3.2.10.4.3.3. Other ESs. Other ESs (e.g., buildings, PTRs, installation boundary, operational support buildings) within the non-essential personnel MSD must not be occupied during the actual detonation unless protective structures or measures are used in accordance with paragraph **V5.E3.2.6.2.**

V5.E3.2.10.5. MRS Intentional Detonation Site. Prior to actual detonation, use unintentional detonation criteria as listed in paragraph **V7.E4.5.8.3.2.1.**

V5.E3.2.10.5.1. Separation to Personnel. Apply non-essential personnel MSD in accordance with paragraph **V5.E3.2.6.** to all personnel during the actual detonation.

V5.E3.2.10.5.2. Separation to and from MEC Collection Points and MRS Explosives Storage. From the MRS intentional detonation site to MEC collection points and to MRS explosives storage apply IMD in accordance with paragraph **V7.E4.5.8.3.3.3.** From an MEC collection point or an MRS explosives storage to an MRS intentional detonation site no QD separation is required in accordance with paragraph **V7.E4.5.8.3.3.2.**

V5.E3.2.10.6. **(Added)(AF)** Exercises and Training Involving Simulators and Smoke Producing Munitions. See paragraph **V6.E3.6.1.4.9.** for licensed explosives storage requirements for simulators and smoke producing munitions used for training and exercises. The following requirements apply to the use of these devices during exercises and training:

V5.E3.2.10.6.1. **(Added)(AF)** Only DoD stock-listed items are authorized for use by Air Force personnel. **(T-1).** Other military services will use DoD approved items only, when using Air Force ranges or facilities. DoD or other federal agency explosives operations and storage will be performed with DoD oversight and conducted IAW this manual. Planning for joint training and exercises ensures no exposure of Air Force personnel to non-DoD stock-listed items.

V5.E3.2.10.6.2. **(Added)(AF)** Only trained personnel can prepare and activate these devices. **(T-1).**

V5.E3.2.10.6.2.1. **(Added)(AF)** This training must be provided by qualified personnel on an annual basis. **(T-1).**

V5.E3.2.10.6.2.2. **(Added)(AF)** Qualified personnel who can provide training will be determined locally, but may be from EOD, munitions, or weapons safety. These personnel must have classroom instruction, pass a written test, be qualified to handle, maintain and inspect the items for which they will provide training, and be retrained annually. **(T-1).**

V5.E3.2.10.6.2.3. **(Added)(AF)** It is the responsibility of the user organization to request training and maintain training records. **(T-1).**

V5.E3.2.10.6.2.4. **(Added)(AF)** Higher headquarters evaluation teams using these devices must present proof of training to the installation weapons safety office. **(T-1).**

V5.E3.2.10.6.3. **(Added)(AF)** These devices present a fire hazard. Remove all combustible material from within a 10-foot radius of the initiation point. **(T-1).** Consider winds and fire hazards such as dry grass or fire bans. Consider using a barrier (baffle or screen) to control the spread of heat during functioning.

V5.E3.2.10.6.4. **(Added)(AF)** Ground burst and hand grenade simulators also present a blast, debris, or fragment hazard.

V5.E3.2.10.6.4.1. **(Added)(AF)** Comply with the following minimum distances unless greater separation distances are prescribed in the item TO for use of ground burst or hand grenade simulators:

V5.E3.2.10.6.4.1.1. **(Added)(AF)** Maintain a minimum separation of 125 feet from personnel and vehicles. (T-1). Personnel who initiate these munitions may be closer than 125 feet, but they must be as close to 125 feet as possible and have their back to the munitions. **(T-1).**

V5.E3.2.10.6.4.1.2. **(Added)(AF)** Maintain a minimum separation of 100 feet from facilities without a facing window. **(T-1).**

V5.E3.2.10.6.4.1.3. **(Added)(AF)** Maintain a minimum separation of 200 feet from facilities with a facing window. **(T-1).**

V5.E3.2.10.6.4.1.4. **(Added)(AF)** Maintain a minimum separation of 50 feet from hardened facilities, including HASs. **(T-1).**

V5.E3.2.10.6.4.1.5. **(Added)(AF)** Maintain a minimum separation of 200 feet from POL storage. **(T-1).**

V5.E3.2.10.6.4.1.6. **(Added)(AF)** Maintain a minimum separation of 100 feet from aircraft in the open, or 200 feet if aircraft are explosives loaded. **(T-1).**

V5.E3.2.10.6.4.1.7. **(Added)(AF)** Maintain a minimum separation of 200 feet from explosives operating locations, holding areas, open storage areas, or butler-type storage facilities. **(T-1).**

V5.E3.2.10.6.4.1.8. **(Added)(AF)** Maintain a minimum separation of 50 feet from above-ground magazines of block, brick, or concrete construction and from ECMs. **(T-1).**

V5.E3.2.10.6.4.2. **(Added)(AF)** The required distances in paragraph **V5.E3.2.10.6.4.1.** may be reduced by barriers or shields designed IAW UFC 3-340-02 or MIL-STD-398A. Provide the design criteria to AFSEC/SEW for approval. **(T-1).**

V5.E3.2.10.6.4.3. **(Added)(AF)** Monitor items for proper functioning, and notify EOD, or other qualified personnel, when an item malfunctions. The incident commander, with recommendation from EOD, will determine minimum withdrawal distances for malfunctioned items; these distances will never be less than the separation distances required by paragraph **V5.E3.2.10.6.4.1. (T-1).**

V5.E3.2.10.6.5. **(Added)(AF)** Smoke-producing munitions can present a toxic hazard in high concentrations.

V5.E3.2.10.6.5.1. **(Added)(AF)** Comply with the item TO for separation and personal protective equipment (PPE) requirements. **(T-1).** If no requirements are specified in the item TO, avoid the smoke or follow actions required in Table **V1.E10.T10.**

V5.E3.2.10.6.5.2. **(Added)(AF)** Contact Environmental Management and the Fire Department prior to use of these items. **(T-1).**

V5.E3.2.10.6.6. **(Added)(AF)** Dispose of expended items IAW environmental standards and TO 11A-1-60. **(T-1).**

V5.E3.2.10.7. **(Added)(AF)** Training or Exercises Involving AE.

V5.E3.2.10.7.1. **(Added)(AF)** The Training or Exercise Team Chief, with the assistance of weapons safety, develops plans for conducting training and exercise events. The following are minimum requirements for these plans:

V5.E3.2.10.7.1.1. **(Added)(AF)** A risk assessment of explosives operations for the training or exercise (see section **V1.E9.2.**). **(T-1).**

V5.E3.2.10.7.1.2. **(Added)(AF)** A list of all explosives to be used in the training or exercise, to include NSN, HD, and explosives weights. **(T-1).**

V5.E3.2.10.7.1.3. **(Added)(AF)** A detailed list of locations where explosives will be deployed for the training or exercise (see section **V1.E6.23.** for restrictions on taking explosives into places of public assembly). **(T-1).**

V5.E3.2.10.7.1.4. **(Added)(AF)** A procedure for accountability and reconciliation of all items used in the training. **(T-1).**

V5.E3.2.10.7.1.5. **(Added)(AF)** Required separation distances per paragraph **V5.E3.2.10.6.**

V5.E3.2.10.7.1.6. **(Added)(AF)** Required PPE. **(T-1).**

V5.E3.2.10.7.2. **(Added)(AF)** The responsible commander will approve the plan in writing, ensuring personnel not normally associated with explosives operations and exercises are not exposed to explosives hazards. **(T-1).**

V5.E3.2.10.7.3. **(Added)(AF)** Additional requirements for EOD training at off-range locations are addressed in paragraph **V5.E3.2.11.4.** of this manual.

V5.E3.2.11. EOD Operations

V5.E3.2.11.1. Nonessential Personnel

V5.E3.2.11.1.1. Apply public withdrawal distances to all nonessential personnel for EOD operational responses in accordance with Table **V1.E10.T10.**

V5.E3.2.11.1.2. EOD operations or demonstrations conducted on ranges require MSDs in accordance with paragraph **V5.E3.2.6.** for nonessential personnel.

V5.E3.2.11.2. Essential Personnel. EOD training operations or operations involving demolition of AE do not require MSDs for essential personnel. The onsite DoD authority will determine adequate protection for essential personnel.

V5.E3.2.11.3. EOD Proficiency Training Ranges. EOD proficiency training ranges will only be used for detonation of bare explosives charges (e.g., M112 composition C-4 demolition blocks ("C-4")) or items without a fragment hazard. When determining NEWQD, the initiation chain (blasting caps, detonation cord, time fuze, shock tube, etc.) explosives weights are not required to be included. If a demolition explosive with a TNT equivalency for overpressure greater than that of C-4 (which has a TNT equivalency for overpressure of 1.37) is used, then the NEWQD calculation must address the higher TNT equivalency, and the amount of explosives charge used must be adjusted downward accordingly; this is an exception to the requirement in EOD joint procedures to factor in TNT equivalency when performing intentional detonations.

V5.E3.2.11.3. **(Added)(AF)** Limit demolition explosives on EOD proficiency training ranges to a maximum of five lbs. **(T-1).** Use only non-fragmenting charges (e.g., Boot Banger, bare C-4, Conical Liquid Follow Through), shaped charges (e.g., Mk 7 series, Mk 2, flex linear), ordnance penetrators (e.g., Mk 23, Mk 24), explosive powered tools (e.g., Mk-2 dearmer, Percussion Actuated Non-electric Disruptor), and inert mild steel targets on training ranges. **(T-1).** Place a minimum of three sand bags in front of explosive penetrators to capture explosively formed penetrators and limit directional forces. **(T-1).**

V5.E3.2.11.3.1. NEWQDs and Separation Distances. Allowable NEWQDs and required separation distances from the destruction point to facilities that require IBD, PTRD, and ILD protection are shown in paragraphs **V5.E3.2.11.3.1.1.** through **V5.E3.2.11.3.1.3.**

V5.E3.2.11.3.1.1. For a 5-lb [2.27-kg] NEWQD, the required separation distance is 500 ft [152.4 m]. The 5-lb [2.27-kg] NEWQD limit is intended to allow for the detonation of up to four 1.25-lb [0.57-kg] blocks of C-4 explosive or up to 5 lbs [2.27 kg] of a demolition explosive with a TNT equivalency equal to or less than that of C-4 explosive.

V5.E3.2.11.3.1.2. For a 2.5-lb [1.13-kg] NEWQD, the required separation distance is 300 ft [91.4 m]. The 2.5-lb [1.13-kg] NEWQD limit is intended to allow for the detonation of up to two 1.25-lb [0.57-kg] blocks of C-4 explosive or up to 2.5 lbs [1.13 kg] of a demolition explosive with a TNT equivalency equal to or less than that of C-4 explosive.

V5.E3.2.11.3.1.3. For a 1.25-lb [0.57-kg] NEWQD, the required separation distance is 200 ft [61 m]. The 1.25-lb [0.57-kg] NEWQD limit is intended to allow for the detonation of one 1.25-lb [0.57-kg] block of C-4 explosive or up to 1.25 lbs [0.57 kg] of a demolition explosive with a TNT equivalency equal to or less than that of C-4 explosive.

V5.E3.2.11.3.2. Barricading of Destruction Point. If the EOD proficiency training range provides the 500-ft [152.4-m] protection distance specified in paragraph **V5.E3.2.11.3.1.1.**, then no barricading of the destruction point is required. If the EOD proficiency training range provides less than 500-ft [152.4-m] protection distance, then the range's destruction point must be constructed to control ejection of debris by:

V5.E3.2.11.3.2.1. Constructing a barricade with two entrances, which surrounds the destruction point, that is the equivalent of at least two side-to-side sandbags, is at least 6 ft [1.83 m] high, and is constructed within about 10 ft [3.05 m] of the destruction point.

V5.E3.2.11.3.2.2. Locating the barricade entrances at 180 degrees separation. These entrances must be barricaded, as described in paragraph **V5.E3.2.11.3.2.1.**, to effectively block all debris.

V5.E3.2.11.3.3. Use of Items With a Fragment Hazard. EOD proficiency training ranges used with other than bare charges or non-fragment producing items must meet the requirements of paragraphs **V5.E3.2.1.** through **V5.E3.2.10.**

V5.E3.2.11.3.4. Use of Explosively Operated Tool Kits. EOD proficiency training ranges on which explosively operated tool kits are used on inert AE only require 100-ft [30.5-m] separation distance between the destruction point and facilities that require IBD, PTRD, and ILD protection. The site must be barricaded in accordance with paragraph **V5.E3.2.11.3.2.**

V5.E3.2.11.3.4.1. **(Added)(AF)** EOD tools (explosive devices) and inert training devices or targets are non-fragmentation producing devices. They may produce some debris, but should not be mistaken for fragmentation. Fragmentation is specifically designed into a weapon or device; whereas debris is not.

V5.E3.2.11.3.4.2. **(Added)(AF)** Vehicle-targets (for remote-opening techniques or otherwise checking for IEDs) on EOD proficiency ranges is standard practice. EOD teams are allowed to do this type of training on their proficiency ranges.

V5.E3.2.11.3.5. **(Added)(AF)** Only permit Explosively-Driven Water Tool (EDWT) operations at EOD proficiency training ranges provided the reduced QD given in the next paragraph remains within the established QD for that specific range. **(T-1).**

V5.E3.2.11.3.5.1. **(Added)(AF)** The approved list of EDWT includes Mineral Water Bottle, Hydra-Jet, Big Mike, Bottler, Boot Banger, Vantreppan, Modular Large Vehicle Disruptor, Aqua Ram, and Exit Charge.

V5.E3.2.11.3.5.2. **(Added)(AF)** EDWT QD is determined using the equation QD = $328*NEW^{(1/3)}$, subject to a 100-foot minimum distance. When calculating the NEW, do not include the explosive weight of the main charge initiation chain (e.g., blasting caps, detonation cord, time fuze, shock tube, etc.). However, some EDWT use the detonation cord as the main

water-propulsion charge, and in those cases, consider the NEW of that detonation cord in determining EDWT NEW and appropriate QD.

V5.E3.2.11.3.6. **(Added)(AF)** On-site authorities determine the minimum separation distance for essential personnel.

V5.E3.2.11.3.7. **(Added)(AF)** EOD proficiency training ranges used with other than bare charges or non-fragment producing items will meet the requirements of section**V5.E3.2. (T-1).** If using the training range for operations that will produce fragments above the level expected for normal EOD proficiency training (normally open shots), meet the requirements of paragraph **V5.E3.2. (T-1).**

V5.E3.2.11.3.8. **(Added)(AF)** Holding pads. Siting holding pads for additional training shots is optional. If sited, use AGM criteria. Maintain ILD to the destruction point and to the personnel control site. Maintain IMD between each holding pad.

V5.E3.2.11.3.9. **(Added)(AF)** Locate control sites and detonation points at ILD from all other PESs.

V5.E3.2.11.4. **(Added)(AF)** EOD Training at Off-Range Locations and Outside Agency Collaboration Activities.

V5.E3.2.11.4.1. **(Added)(AF)** EOD personnel may use procedures with explosively propelled liquids, shots, gases, slugs, or heat against inert training munitions and soft targets at off-range locations on military installations in support of unit training, inspections, and evaluations.

V5.E3.2.11.4.2. **(Added)(AF)** EOD teams may use MK 1 Remote Wrenches, MK 2 .50 caliber dearmers, Field Fabricated dearmers, Robotic Vehicles, Stand-off Disrupters, Stand-off dearmers, Percussion Actuated Neutralizers (PAN), and Carbon 10 Disrupters for training.

V5.E3.2.11.4.3. **(Added)(AF)** Use EOD 60-series or applicable publications to calculate appropriate standoff distances for EOD training and operations at off-range locations. The items and quantities listed below are the maximums authorized for each inspection or evaluation scenario for off-range unit training, inspection, and evaluation operations:

V5.E3.2.11.4.3.1. **(Added)(AF)** Two .50 caliber impulse cartridges.

V5.E3.2.11.4.3.2. **(Added)(AF)** Two .50 caliber ball, M2 cartridges (projectile extracted).

V5.E3.2.11.4.3.3. **(Added)(AF)** Two electric or non-electric blasting caps.

V5.E3.2.11.4.3.4. **(Added)(AF)** Two 10 foot lengths of standard detonating cord (Department of Defense Identification Code (DODIC) M456).

V5.E3.2.11.4.3.5. **(Added)(AF)** Thirteen feet of safety fuse.

V5.E3.2.11.4.3.6. **(Added)(AF)** Three M60 or M81 fuse lighters.

V5.E3.2.11.4.3.7. **(Added)(AF)** Three AN-M14 thermite grenades.

V5.E3.2.11.4.3.8. **(Added)(AF)** Shock Tube as required.

V5.E3.2.11.4.3.9. **(Added)(AF)** Igniters (Shock Tube Initiators, DODIC YY35) as required.

V5.E3.2.11.4.3.10. **(Added)(AF)** Five each, PAN Cartridges.

V5.E3.2.11.4.4. **(Added)(AF)** Under the following conditions, EOD personnel may conduct off-range operations using the tools and explosives described in paragraphs **V5.E3.2.11.4.2.** and **V5.E3.2.11.4.3.**

V5.E3.2.11.4.4.1. **(Added)(AF)** Notify installation weapons safety office with the specific location, prior to the operation.

V5.E3.2.11.4.4.2. **(Added)(AF)** Make proper notifications concerning anticipated noise.

V5.E3.2.11.4.4.3. **(Added)(AF)** Do not locate the operation in an explosives prohibited zone.

V5.E3.2.11.4.4.4. **(Added)(AF)** Evacuate non-essential personnel to the applicable withdrawal distances required for actual explosives being employed.

V5.E3.2.11.4.4.5. **(Added)(AF)** Place a minimum of three filled sand bags in front and behind tools that project slugs, fluids, or shot to limit directional force unless fired from the robot. Tools fired from robots only require three filled sand bags in front of the tool.

V5.E3.2.11.4.4.6. **(Added)(AF)** Use only slugs that disintegrate on impact.

V5.E3.2.11.4.4.7. **(Added)(AF)** Select an area free of all fire hazards and use only inert training ordnance or IED concealment devices as a target and follow the 60-series publications to calculate standoff distances.

V5.E3.2.11.4.4.8. **(Added)(AF)** When operating tool sets inside a building, take positive measures to prevent secondary or collateral damage.

V5.E3.2.11.4.5. **(Added)(AF)** EOD Training off-range at off- installation (law enforcement or international partner operated) locations with local, state, and federal agencies or other international partners. Under the auspices of DoDD 3025.18 and 1100.20 provide this guidance to facilitate open discussions and training for “Immediate Response” situations

involving the mitigation of IED or military munitions. In these situations, the following minimum requirements apply:

V5.E3.2.11.4.5.1. **(Added)(AF)** EOD Leadership will complete a risk assessment of the lesson plans and training area to ensure all Air Force explosives safety standards have been addressed and mitigated. **(T-1).** As a minimum, coordinate these items with SEW, JA, and PA.

V5.E3.2.11.4.5.2. **(Added)(AF)** Obtain approval of an official participation request from the installation commander or designated representative. **(T-1).** Include risk assessment, training objectives, time, place, HD of explosives used, method of initiation, and any other performance factors from the hosting local, state and federal agency or other international partners in the request. (T-1)

V5.E3.2.11.4.5.3. **(Added)(AF)** The EOD Team Leader or designated representative will maintain EOD team integrity and ensure personnel safety at civil law enforcement operated locations. **(T-1).**

V5.E3.2.11.4.6. **(Added)(AF)** EOD Training On-Installation with local, State, and Federal agencies. Limit on-installation training with local, state and federal agencies or other international partners to participation of EOD procedures.

V5.E3.2.11.4.6.1. **(Added)(AF)** The appropriate essential or non-essential personnel principles will be applied during explosive demonstrations. Conversely, training with civil law enforcement explosives are not authorized for detonation on-installation unless their munitions meet established DoD standards and the requirements of section **V5.E3.2.10.7.**

V5.E3.2.11.4.6.2. **(Added)(AF)** Obtain approval of an official participation request from the installation commander or designated representative. **(T-1).** Include training objectives, time, place, HD, method of initiation, and any other performance factors. (T-1)

V5.E3.2.11.5. **(Added)(AF)** Training in Explosives Entry Techniques. Explosives entry techniques are used in special missions where assault personnel require immediate access to the target. Siting is not required for training in explosives entry techniques at locations where the expected blast and fragmentation effects does not exceed existing range surface danger zones as defined in AFMAN 13-212V1. Site all explosives entry techniques training locations that are not managed per AFMAN 13-212V1.

V5.E3.2.11.5.1. **(Added)(AF)** Essential personnel MSD. Use approved explosives entry techniques technical procedures to determine personnel protection for essential personnel involved in explosive entry technique training.

V5.E3.2.11.5.2. **(Added)(AF)** Non-essential Personnel MSD. The MSD for non-essential personnel is K328 with a minimum distance of 200 feet. The 200-foot minimum distance can be eliminated when a protective barrier is provided that can contain, or absorb all

fragments (this may include the training structure itself when breaching into the interior of the structure).

V5.E3.2.12. Live-fire Demonstrations and Disposal Operations. The appropriate DoD authority will determine, on a case-by-case basis:

V5.E3.2.12. **(Added)(AF)** For DoD-conducted live-fire demonstrations, the MAJCOM may provide additional requirements in their supplement to this manual to ensure safety of personnel. At a minimum, address the following:

V5.E3.2.12.1. Essential personnel required for the live-fire demonstrations or disposal operations.

V5.E3.2.12.2. Other range safety considerations (e.g., personnel withdrawal distances and acceptable exposures).

V5.E3.2.12.2. **(Added)(AF)** See AFMAN 13-212V1 for range safety considerations.

V5.E3.2.12.2.1. **(Added)(AF)** Risk assessment requirements (see section **V1.E9.2.**). **(T-1).**

V5.E3.2.12.2.2. **(Added)(AF)** Documentation, coordination, and approval requirements. **(T-1).**

V5.E3.2.12.3. **(Added)(AF)** For contractor-conducted live-fire demonstrations, the MAJCOM may provide additional requirements in their supplement to this manual to ensure safety of personnel. At a minimum, address the following:

V5.E3.2.12.3.1. **(Added)(AF)** Address safety considerations (e.g., personnel withdrawal distances and acceptable exposures). As a minimum, apply the requirements of sections **V5.E3.1.** and **V5.E3.2.** except as follows:

V5.E3.2.12.3.1.1. **(Added)(AF)** Ensure the demonstration explosives are not located in an active explosives clear zone.

V5.E3.2.12.3.1.2. **(Added)(AF)** Ensure the explosives clear zone of the demonstration explosives does not encompass Air Force facilities.

V5.E3.2.12.3.1.3. **(Added)(AF)** Apply “non-essential personnel MSD” criteria to all non-contractor personnel. Contractors will determine required separation and safety criteria for their own personnel.

V5.E3.2.12.3.2. **(Added)(AF)** Risk assessment requirements (see section **V1.E9.2.**).

V5.E3.2.12.3.3. **(Added)(AF)** Documentation, coordination, and approval requirements.

V5.E3.2.12.3.4. **(Added)(AF)** All off-installation opportunities to store commercially purchased explosives intended for use in USAF sponsored (on-installation) demonstrations must be exhausted prior to considering use of the MSA or other sited on-installation facilities (see sections **V4.E5.21.** and **V1.E6.10.**). Off- installation storage for live-fire demonstrations will be at the contractor's expense.

V5.E3.2.12.3.4.1. **(Added)(AF)** Only store commercial explosives having an approved SDS, DOT, or other federally recognized certification identifying the item's HD and NEW, and a CG.

V5.E3.2.12.3.4.2. **(Added)(AF)** Store commercial explosives only in the original shipping and packaging configuration.

V5.E3.2.12.3.4.3. **(Added)(AF)** Separate commercial and DoD explosives a minimum of IMD.

V5.E3.2.12.3.4.4. **(Added)(AF)** Commercial explosives will be handled, stored, and transported by the commercial firm responsible for the explosives demonstration. Munitions personnel will only escort contract personnel to and from the storage facility and open the facility for contractor access.

V5.E3.2.12.3.5. **(Added)(AF)** Commercially purchased explosives will not be handled or transported by AF military personnel on or off-duty or on duty AF civilian personnel. Exception: EOD personnel providing emergency assistance or response may handle or transport commercial explosives (e.g., life-saving attempts, preserving high value military resources, or operating under specific approval from MAJCOM).

V5.E3.2.12.3.6. **(Added)(AF)** Commercial firms responsible for the explosives demonstrations must be properly licensed and insured.

V5.E3.2.12.3.6.1. **(Added)(AF)** Commercial firms will comply with all established DoD safety regulations. **(T-1).**

V5.E3.2.12.3.6.2. **(Added)(AF)** Commercial firms will take all unused and expended munitions items with them off- installation at the completion of the demonstration.

V5.E3.2.12.3.6.3. **(Added)(AF)** Commercial firms will ensure fire extinguishers and properly equipped vehicle for explosives transportation are provided.

V5.E3.2.12.3.7. **(Added)(AF)** Demonstration site will meet the requirements of paragraphs **V5.E3.2.12.**, **V5.E3.2.11.1.**, and **V5.E3.2.11.3.** and the following:

V5.E3.2.12.3.7.1. **(Added)(AF)** See AFMAN 10-1004 for mowing or pre-burn considerations.

V5.E3.2.12.3.7.1.1. **(Added)(AF)** Will be saturated with water the night prior to the event, if needed.

V5.E3.2.12.3.7.1.2. **(Added)(AF)** Will be inspected for rock and other debris which could contribute to a secondary fragment hazard. Items discovered will be removed from the site.

V5.E3.2.12.3.7.2. **(Added)(AF)** If USAF resources or equipment are to be used, the responsible installation commander must accept the risk for the loss of the resources and any associated damages if this option is elected. **(T-1).** If USAF fuel resources are used, they will be delivered in portable (fuel bowser) delivery systems prior to the explosives being delivered to the site. **(T-1).**

V5.E3.2.12.3.7.3. **(Added)(AF)** Non-essential personnel MSD for demonstrations will not be less than the requirements specified in paragraph **V5.E3.2.5.** or 1,250 feet, whichever is greatest, from the intentional detonation site. **(T-1).**

V5.E3.2.12.3.8. **(Added)(AF)** Over flight of the explosives demonstration site will be restricted to no closer than 500 feet aboveground level by either DoD or commercial aircraft. **(T-1).**

VOLUME 5 – ENCLOSURE 4: ENERGETIC LIQUIDS

V5.E4.1. SCOPE AND APPLICATION

V5.E4.1.1. This enclosure applies to the storage of energetic liquids, listed in Table **V5.E4.T3.**, in all types of containers, including rocket and missile tankage. Laboratory quantities must be stored and handled as prescribed by the controlling DoD Component. The required QD in this enclosure is based only on the energetic liquids' energetic reaction (blast overpressure and container fragmentation). These QD requirements do not consider the toxicity or potential down-wind hazard. Therefore, QD may not be the only factor that needs to be considered when selecting a location for storage and operations of energetic liquids.

V5.E4.1.1. **(Added)(AF)** Store and handle laboratory quantities as prescribed in AFMAN 91-203.

V5.E4.1.2. This enclosure does not govern the storage or handling of energetic liquids for uses other than in space launch vehicles, rockets, missiles, associated static test apparatus, and AE.

V5.E4.2. CONCEPT

V5.E4.2.1. These QD standards were developed on the premise that the controlling DoD Component must ensure that the materials of construction are compatible with the energetic liquids, facilities are of appropriate design, fire protection and drainage control techniques are employed, and other specialized controls (e.g., nitrogen padding, blanketing, and tank cooling) are used, when required.

V5.E4.2.2. When additional hazards associated with AE are involved, the safety distances prescribed in other enclosures of this volume, as well as other volumes of this manual, will be applied, as required.

V5.E4.2.3. These standards are based upon the estimated credible damage resulting from an incident, without considering probabilities or frequency of occurrence.

V5.E4.3. DETERMINATION OF ENERGETIC LIQUIDS QUANTITY

V5.E4.3.1. The total quantity of energetic liquids in a tank, drum, cylinder, or other container must be the net weight of the energetic liquids contained therein. Quantity of energetic liquids in the associated piping must be included to the points that positive means are provided for interrupting the flow through the pipe, or interrupting a reaction in the pipe in the event of an incident.

Table V5.E4.T3. Hazard Classifications and Minimum QD For Energetic Liquids

Energetic Liquid	OSHA/NFPA Fuel[a] or Oxidizer[b] Class	DoD Storage Hazard Class	Minimum QD[c]
H_2O_2, > 60%	3 or 4[d]	5.1 (LA)	800[e] ft or Table **V5.E4.T7.** 243.8[e] m or Table **V5.E4.T6.**
IRFNA	3	8 (LA)	Table **V5.E4.T7.**
N_2O_4/MON	2	2.3 (LA)	Table **V5.E4.T7.**
LO_2	N/A	2.2 (LA)	Table **V5.E4.T8.**
RP-1	II	3 (LB)	Table **V5.E4.T6.**
JP-10	II	3J (LB)	Table **V5.E4.T6.**
LH_2	N/A	2.1 (LB)	Table **V5.E4.T9.**
N_2H_4, > 64%	II	8 (LC)	800[e] ft or 300[f] ft or Footnote g *243.8[e] m or 91.4[f] m or Footnote g*
Aerozine 50 (50% N_2H_4/50% UDMH)	I B	6.1 (LC)	800[e] ft or 300[f] ft or Footnote g *243.8[5] m or 91.4[f] m or Footnote g*
Methylhydrazine	I B	6.1 (LC)	800[e] ft or 300[f] ft or Footnote g *243.8[e] m or 91.4[f] m or Footnote g*
UDMH	I B	6.1 (LC)	Table **V5.E4.T6.**
Ethylene Oxide	I A	2.3 (LD)	HD 1.1 QD[h] with TNT Equiv = 100%, or 800[e] ft or 300[f] ft *HD 1.1 QD[h] with TNT Equiv = 100%, or 243.8[e] m or 91.4[f] m*
Propylene Oxide	I A	3 (LD)	HD 1.1 QD[h] with TNT Equiv = 100%, or 800[e] ft or 300[f] ft *HD 1.1 QD[h] with TNT Equiv = 100%, or 243.8[e] m or 91.4[f] m*
Nitromethane	I C	3 (LE)	HD 1.1 QD with TNT Equiv = 100%[i], or Table **V5.E4.T6.**
HAN	2	8 (LE)	800[e] ft or Table **V5.E4.T7.** *243.8[e] m or Table **V5.E4.T7.***
XM-46 (HAN Monopropellant)	N/A	1.3C (LE)	800[e] ft or use HD 1.3 QD *243.8[e] m or use HD 1.3 QD*
Otto Fuel II	III B	9 (LE)	HD 1.1 QD[j] with TNT Equiv = 100%, or 150[k] ft or Table **V5.E4.T6.** HD 1.1 QD[j] with TNT Equiv = 100%, or 45.7[k] m or Table **V5.E4.T6.**
Halogen Fluorides (ClF_3/ClF_5)	4	2.3 (LE)	Table **V5.E4.T7.**
Liquid Fluorine	4	2.3 (LE)	Table **V5.E4.T7.**

Table V5.E4.T3. Hazard Classifications and Minimum QD For Energetic Liquids, Continued

Energetic Liquid	OSHA/NFPA Fuel[a] or Oxidizer[b] Class	DoD Storage Hazard Class	Minimum QD[c]
Nitrogen Trifluoride	4	2.2 (LE)	Table **V5.E4.T7.**
Nitrate Esters (e.g. NG, TMETN, DEGDN, TEGDN, BTTN)	N/A	1.1 D (LE)	HD 1.1 QD with TNT Equiv = 100%

OSHA = Occupational Safety and Health Administration; NFPA = National Fire Protection Association; H_2O_2 = hydrogen peroxide; IRFNA = inhibited red fuming nitric acid; N_2O_4 = nitrogen tetroxide; MON = mixed oxides of nitrogen; LO_2 = liquid oxygen; RP = rocket propellant; JP = jet propellant; LH_2 = liquid hydrogen; N_2H_4 = hydrazine; UDMH = unsymmetrical dimethylhydrazine; HD = hazard division; TNT = trinitrotoluene; HAN = hydroxyl ammonium nitrate; ClF_3 = chlorine trifluoride; ClF_5 = chlorine pentafluoride; NG = nitroglycerin; TMETN = trimethylolethane trinitrate; DEGDN = diethylene glycol dinatrate; TEGDN = triethylene glycol dinitrate; BTTN = butane-trio-trinitrate

a	Flammable or combustible liquid classification index based on flash point and boiling point versus criteria as specified in section 1910.106 of Title 29, CFR and NFPA 30. Primary descriptor is a Roman numeral, possibly with an additional letter.
b	NFPA oxidizer classification index as described in NFPA 430. Descriptor is an ordinary number.
c	Positive measures for spill containment/control must be taken for isolated storage of energetic liquids in accordance with applicable OSHA and NFPA guidance (referenced in Tables **V5.E4.T6.** through **V5.E4.T8.**). For flammable energetic liquids and liquid oxidizers where only minimum blast or fragment distances are specified, applicable OSHA and NFPA guidance referenced in Tables **V5.E4.T6.** and **V5.E4.T7.**, respectively, should also be used.
d	H_2O_2 solutions of concentration greater than 91 percent are NFPA Class 4 oxidizers.
e	Should be used as a default value, unless otherwise hazard classified, when the material is packaged in small (non-bulk) shipping containers, portable ground support equipment, small aerospace flight vehicle propellant tanks, or similar pressure vessels that provide heavy confinement (burst pressure greater than 100 psi [690 kPa]).
f	Should be used as a default value, unless otherwise hazard classified, when the material is packaged in small (non-bulk) shipping containers (DOT) 5C or equivalent), portable ground support equipment, small aerospace flight vehicle propellant tanks, or similar pressure vessels providing a lower level of confinement (burst pressure less than or equal to 100 psi [690 kPa]) and if adequate protection from fragments is not provided from terrain, effective barricades, nets, or other physical means (lightweight building construction is not adequate). If protection from fragments is provided, use the IBD/PTRD "Protected" column of Table **V5.E4.T9.**
g	For large ready, bulk, or rest storage tanks (as defined in paragraphs **V5.E4.5.7.**, **V5.E4.5.9.**, and **V5.E4.5.10.**), use Table **V5.E4.T9.**
h	Where there is a reasonable risk of vapor cloud explosion of large quantities (for example, in bulk tank storage).
i	Technical grade nitromethane in unit quantities of 55 gallons [208.2 liters] or less in DOT-approved containers listed in section 173.202 of Title 49, CFR may be stored as flammable liquids (Table **V5.E4.T6.**) provided the following apply: 1. Packages are stored only one tier high. 2. Packages are protected from direct rays of the sun. 3. Maximum storage life of 2 years, unless storage life tests indicate product continues to meet purchase specification. Such tests are to be repeated at 1-year intervals thereafter.

Table V5.E4.T3. Hazard Classifications and Minimum QD For Energetic Liquids, Continued

j	For underwater static test stands, when operated at hydrostatic pressure above 50 pounds per square inch gauge (psig) [345 kPa], or for propellant tanks or other vessels having burst pressures of greater than 100 psig [690 kPa] without acceptable pressure relief devices (unless otherwise hazard classified). For underwater test stands, the TNT equivalence (i.e., MCE) should include the total energetic liquids weight in all pumps and plumbing, as well as the weight of energetic liquids held in tankage (under the test cell hydrostatic pressure) unless acceptable mitigation measures such as fuel line detonation arrestors and/or fuel tank isolation/barricading are used (as determined by hazard analysis).
k	Should be used as a default value, unless otherwise hazard classified, when the material is packaged in small vehicle propellant tanks, small (non-bulk) shipping containers, portable ground support equipment, or similar pressure vessels that provide relatively heavy confinement (burst pressure between 50 and 100 psig [345 and 690 kPa]) without acceptable pressure relief devices.

V5.E4.3.2. When the quantities of energetic liquids are given in gallons [liters], the conversion factors given in Table **V5.E4.T4.** may be used to determine the quantity in pounds [kg].

V5.E4.4. MEASUREMENT OF SEPARATION DISTANCES

V5.E4.4.1. Measure from the closest controlling hazard source (e.g., containers, buildings, segment, or positive cutoff point in piping).

V5.E4.4.2. Measure from the nearest container or controlling subdivision, when buildings containing a small number of cylinders or drums are present or when quantities of energetic liquids are subdivided effectively.

V5.E4.5. HAZARD CLASSIFICATION OF ENERGETIC LIQUIDS

V5.E4.5.1. The main UN hazard classification designators for energetic liquids are indicated in paragraphs **V5.E4.5.1.1.** through **V5.E4.5.1.8.** The original liquid propellant hazard groups I - IV and CGs A - F are no longer used.

V5.E4.5.1.1. Class 1: Explosives.

V5.E4.5.1.2. Class 2: Compressed or liquefied gases.

V5.E4.5.1.3. Class 3: Flammable liquids.

Table V5.E4.T4. Factors to Use When Converting Energetic Liquid Densities[a]

Item	Density (lb/gallon) *[kg/liter]*	Temperature degrees Fahrenheit (°F) *degrees Celsius [°C]*
ClF_5	14.8 *1.77*	77 *25.0*
ClF_3	15.1 *1.81*	77 *25.0*
Ethyl alcohol	6.6 *0.79*	68 *20.0*
Ethylene oxide	7.4 *0.89*	51 *10.6*
Fluorine (liquid)	12.6 *1.51*	-306 *-187.8*
HAN Monopropellants	11.9 *1.43*	77 *25.0*
HAN solution (25 to 95 percent by weight)	10.0 to 13.4 *1.20 to 1.61*	68 *20.0*
N_2H_4	8.4 *1.01*	68 *20.0*
H_2O_2 (90%)	11.6 *1.39*	77 *25.0*
JP-10	7.8 *0.93*	60 *15.6*
LH_2	0.59 *0.07*	-423 *-252.8*
LO_2	9.5 *1.14*	-297 *-182.8*
Monomethyl hydrazine (MMH)	7.3 *0.87*	68 *20.0*
N_2O_4	12.1 *1.45*	68 *20.0*
Nitrogen trifluoride	12.8 *1.53*	-200 *-128.9*
Nitromethane	9.5 *1.14*	68 *20.0*
Otto Fuel II	10.3 *1.23*	77 *25.0*
Propylene oxide	7.2 *0.86*	32 *0.0*
IRFNA	12.9 *1.55*	77 *25.0*

Table V5.E4.T4. Factors to Use When Converting Energetic Liquid Densities,[a] Continued

Item	Density (lb/gallon) *[kg/liter]*	Temperature (°F) *[°C]*
RP-1	6.8	68
	0.81	*20.0*
UDMH	6.6	68
	0.79	*20.0*
UDMH/ N_2H_4	7.5	77
	0.90	*25.0*

a	Conversion of quantities of energetic liquids:		
	English EQNs		
	From gallons to lbs:	lbs of energetic liquid = gallons*density of energetic liquid (lbs/gallon)	EQN V5.E4.T4-1
	From lb/gallon to kg/liter:	1 lb/gallon = 8.345 kg/liter	EQN V5.E4.T4-2
	Metric EQNs		
	From liters to kg:	*kg of energetic liquid = liters*density of energetic liquid (kg/liter)*	*EQN V5.E4.T4-3*
	From kg/liter to lb/gallon:	*1 kg/liter = 0.11983 lb/gallon*	*EQN V5.E4.T4-4*

V5.E4.5.1.4. Class 4: Flammable solids and self-reactive materials.

V5.E4.5.1.5. Class 5: Oxidizers.

V5.E4.5.1.6. Class 6: Toxic/infectious substances.

V5.E4.5.1.7. Class 8: Corrosive.

V5.E4.5.1.8. Class 9: Miscellaneous.

V5.E4.5.2. Because two energetic liquids might each be compatible with certain explosive AE stores, but incompatible with each other, a two-part CG designation is assigned to an energetic liquid. The design and logistics of modern weapons sometimes require that consideration be given to permitting storage or operations involving energetic liquids in a storage structure containing solid explosives. For example, it may be necessary to store hydrocarbon-fueled cruise missiles having HE warheads with fueled configurations not containing explosive warheads. Another example is the storage of liquid gun propellant with explosive ammunition components.

V5.E4.5.2.1. The first element is the standard storage and transportation CG designation. The alpha designations are the same as the CG designations for UN Class 1 as given in **Volume 1 – Enclosure 6**. However, for storage and handling on DoD facilities, a CG may also be assigned to an energetic liquid in a Class other than Class 1. The absence of a CG indicates incompatibility with solid explosives.

V5.E4.5.2.2. The second element is a new energetic liquid compatibility group (ELCG) designation. The ELCG applies to mixed storage of energetic liquids or AE containing energetic liquids. The ELCG is specified in parentheses as the last element of the hazard classification. The ELCG designations and definitions are:

V5.E4.5.2.2.1. LA: Energetic liquids that are strong oxidizers, mainly of acidic character. These materials may cause or contribute to the combustion of other material, possibly resulting in serious flare fires or explosions. Includes, but is not limited to, N_2O_4 and MON, IRFNA, LO_2, H_2O_2, and gels, slurries, or emulsions of these chemicals.

V5.E4.5.2.2.2. LB: Energetic liquids that are readily combustible when exposed to, or ignited in the presence of an oxidizing agent, but that are not strong reducing agents. Some may be hypergolic with group LA materials. Includes, but is not limited to, hydrocarbons such as kerosenes and strained ring ramjet fuels; LH_2; and gels, slurries, or emulsions of these chemicals.

V5.E4.5.2.2.3. LC: Energetic liquids that are readily combustible when exposed to or ignited in the presence of an oxidizing agent, and are also strong reducing agents. These will likely be hypergolic with group LA substances. Includes, but is not limited to, hydrazines and other amines; and gels, slurries, or emulsions of these chemicals.

V5.E4.5.2.2.4. LD: Energetic liquids that act mainly as combustible fuels, similar to groups LB and LC, when exposed to or ignited in the presence of oxidizing agents but that may act as oxidizers in some combinations. They may be a monopropellant with the right catalyst, or may be pyrophoric and ignite upon release to the atmosphere. Examples are boranes and ethylene and propylene oxides.

V5.E4.5.2.2.5. LE: Energetic liquids having characteristics that do not permit storage with any other energetic liquid. They may react adversely with either fuels (reducing agents) or oxidizers. Examples are nitromethane, nitrate ester-based formulations such as Otto Fuel II, liquid monopropellants containing HAN, halogen fluorides (ClF_3 and ClF_5) and fluorine, and gels, slurries, or emulsions of these chemicals.

V5.E4.5.2.3. For mixing of energetic liquids:

V5.E4.5.2.3.1. Different energetic liquids in the same ELCG may be stored together.

V5.E4.5.2.3.2. ELCG-LE may not be mixed with other ELCG or dissimilar ELCG-LE.

V5.E4.5.2.3.3. Mixed storage is prohibited between energetic liquids of different ELCG designations with one exception. ELCG-LB and -LC should not be stored together, particularly when the majority of the material stored is ELCG-LB; however, mixed storage of ELCG-LB and -LC is permitted when operationally necessary.

V5.E4.5.2.4. As an example of the hazard classification of energetic liquids, for the 1.3C(LE) hazard classification for HAN-based liquid gun propellant XM-46:

V5.E4.5.2.4.1. "C" indicates the propellant can be stored in the same magazine with CG-C solid propellants. Because CG-C and CG-D can be mixed, CG-D HE projectiles could also be stored with the energetic liquid gun propellant.

V5.E4.5.2.4.2. "LE" indicates that hydrocarbon fuel (e.g., JP-10), which is an ELCG-LB, would not be permitted in this storage scenario, because its ELCG-LB indicates incompatibility with ELCG-LE.

V5.E4.5.3. Complete DoD hazard classification assignments for current energetic liquids are shown in Table **V5.E4.T3.** (Conversions for gallons of energetic liquids to pounds are provided in Table **V5.E4.T4.**)

V5.E4.5.4. Each new energetic liquid or new non-bulk packaging configuration of an energetic liquid developed by a DoD Component or adopted for DoD use must be examined and assigned a hazard classification in accordance with Army Technical Bulletin 700-2/Naval Sea Systems Command Instruction 8020.8C/Technical Order 11A-1-47.

V5.E4.5.4. **(Added)(AF)** The MAJCOM developing a liquid propellant (or first adopting for use any liquid propellant not listed here) must recommend the hazard classification and CG designation. The responsible MAJCOM will forward substantiated proposals for such assignments as soon as systems application planning allows or warrants to AFSEC/SEW.

V5.E4.5.5. A different minimum distance may be assigned during the hazard classification process when the hazards of a particular new packaging configuration are not adequately addressed. This distance will be indicated parenthetically, in hundreds of feet, as the first element of the hazard classification. For example, if a new liquid oxidizer pressure vessel configuration is hazard classified as (04)2.2(LA), then a minimum distance of 400 ft [122 m] would apply for IBD and PTRD, otherwise the prescribed liquid oxidizer QD criteria would apply.

V5.E4.5.6. The predominant hazard of the individual energetic liquids at specific hazardous locations can vary depending upon the location of the energetic liquid storage and the operations involved. These locations are listed in paragraphs **V5.E4.5.6.1.** and **V5.E4.5.6.2.** in the order of decreasing hazards.

V5.E4.5.6.1. Launch Pads. Operations at these facilities are very hazardous because of the proximity of fuel and oxidizer to each other, the frequency of launchings, lack of restraint of the vehicle after liftoff, and the possibility of fallback with resultant dynamic mixing on impact. To compute the equivalent explosive weight for the launch pad, use Table **V5.E4.T5.** with the combined energetic liquids weight in the launch vehicle tanks and any energetic liquids in piping that are subject to mixing, except as indicated in paragraph **V5.E4.5.8.**

V5.E4.5.6.2. Static Test Stands. Operations at these facilities are less hazardous because test items are restrained and subject to better control than launch vehicles. As with launch pads, the proximity of fuel and oxidizer presents a significant hazard. To reduce this hazard, tankage should be separated and remotely located from the static test stand. Use the equivalent explosive weights of Table **V5.E4.T5.** with the combined energetic liquids weight subject to mixing as determined by hazard analysis. The amount of energetic liquids held in run tanks can be excluded from consideration if the test stand meets all the following criteria, if applicable:

V5.E4.5.6.2.1. All tanks are American Society of Mechanical Engineers (ASME) certified and maintained in accordance with ASME Boiler and Pressure Vessel Code, section VIII, Division 1 or Division 2.

Table V5.E4.T5. Energetic Liquid Equivalent Explosive Weights[a, b, c, d, e]

Energetic Liquids	TNT Equivalence	
	Static Test Stands	Range Launch
LO_2/LH_2	See Footnote f	See Footnote f
LO_2/LH_2 + LO_2/RP-1	Sum of (see Footnote f for LO_2/LH_2) + (10% for LO_2/RP-1)	Sum of (see Footnote f for LO_2/LH_2) + (20% for LO_2/RP-1)
LO_2/RP-1	10%	20% up to 500,000 lbs plus 10% over 500,000 lbs *20% up to 226,795 kg plus 10% over 226,795 kg*
IRFNA/UDMH[g]	10%	10%
N_2O_4/UDMH + N_2H_4[g]	5%	10%
N_2O_4 liquid oxidizer + polybutadiene-acrylic acid-acrolyonitrile (PBAN) solid fuel (Hybrid propellants)	15%[h]	15%[h]
Nitromethane (alone or in combination)	100%	100%
Otto Fuel II	100%[i]	
Ethylene Oxide	100% [j]	100% [j]

a	Use the percentage factors given in this table to determine equivalent explosive weights of energetic liquids mixtures at static test stands and range launch pads when such energetic liquids are located aboveground and are unconfined except for their tankage. Consider other configurations on an individual basis to determine equivalent explosive weights.
b	Add the equivalent explosive weight calculated by the use of this table to any non-nuclear explosive weight aboard before determining distances from Tables **V3.E3.T1.** and **V3.E3.T4.**
c	These equivalent explosive weights apply also for these substitutions: 1. Alcohols or other hydrocarbons for RP-1. 2. H_2O_2 for LO_2 (only when LO_2 is in combination with RP-1 or equivalent hydrocarbon fuel). 3. MMH for N_2H_4, UDMH, or combinations of the two.
d	For quantities of energetic liquids up to but not over the equivalent explosive weight of 100 lbs [45.4 kg] of AE, the DoD Component will determine the distance on an individual basis. Protect all personnel and facilities, whether involved in the operation or not, by operating procedures, equipment design, shielding, barricading, or other suitable means. **(Added)(AF)** AFSEC/SEW will determine the distance on an individual basis.
e	Distances less than intraline are not specified. Where a number of prepackaged energetic liquid units are stored together, the DoD Component will determine separation distance to other storage facilities on an individual basis, considering normal hazard classification procedures.

Table V5.E4.T5. Energetic Liquid Equivalent Explosive Weights,[a, b, c, d, e] Continued

f	For siting launch vehicles and static test stands, equivalent explosive weight is the larger of: 1. The weight equal to $8W^{2/3}$ [$4.13Q^{2/3}$] where W [Q] is the weight of LO_2/LH_2; or 2. 14 percent of the LO_2/LH_2 weight. For these calculations, use the total weight of LO_2/LH_2 present in the launch vehicle, or the total weight in test stand run tankage and piping for which there is no positive means to prevent mixing in credible accidents. When it can be reliably demonstrated that the MCE involves a lesser quantity of energetic liquids subject to involvement in a single reaction, the lesser quantity may be used in determining the equivalent explosive weight. When siting is based on a quantity less than the total energetic liquids present, the MCE and associated explosive yield analysis must be documented in an approved site plan (section **V1.E5.2.**).
g	These are hypergolic combinations.
h	The equivalent explosive weight of the hybrid rocket system N_2O_4 liquid oxidizer combined with PBAN solid fuel was evaluated as 15 percent for an explosive donor accident scenario, 5 percent for a high-velocity impact scenario, and less than 0.01 percent (negligible) for static mixing (tower drop) failures (Air Force Rocket Propulsion Laboratory AFRPL-TR-67-124).
i	See Footnote j of Table **V5.E4.T3.**
j	See Footnote h of Table **V5.E4.T3.**

V5.E4.5.6.2.2. For cryogenic propellants, all tanks are constructed with double wall jacketing.

V5.E4.5.6.2.3. Run tankage is protected from fragments produced by an engine malfunction.

V5.E4.5.6.2.4. Both the fuel and oxidizer lines contain two (redundant) remotely operated valves to shut off flow in the event of a malfunction.

V5.E4.5.7. Ready storage is relatively close to the launch and static test stands; normally it is not involved directly in feeding the engine as in the case with run tankage, which is an integral part of all launch and test stand operations. Use the equivalent explosive weights of Table **V5.E4.T5.** with the combined energetic liquids weight subject to mixing if the facility design does not guarantee against fuel and oxidizer mixing and against detonation propagation to, or initiation at, the ready storage facility when an accident occurs at the test stand, on the ground at the launch pad, or at the ready storage areas. Otherwise, fire and fragment hazards will govern (Tables **V5.E4.T3.**, **V5.E4.T6.**, **V5.E4.T7.**, **V5.E4.T8.**, and **V5.E4.T9.**).

V5.E4.5.8. For cold-flow test operations, fire and fragment hazards govern (Tables **V5.E4.T3.**, **V5.E4.T6.**, **V5.E4.T7.**, **V5.E4.T8.**, and **V5.E4.T9.**) if the design is such that the system is closed except for approved venting; is completely airtight; fuel and oxidizer never are employed concurrently; and each has a completely separate isolated system and fitting types to preclude intermixing, and the energetic liquids are of required purity. Otherwise, use equivalent explosive weights (Table **V5.E4.T5.**) with the combined energetic liquids weight.

V5.E4.5.9. Bulk storage is the most remote storage with respect to launch and test operations. It consists of the area, tanks, and other containers therein, used to hold energetic liquids for supplying ready storage and, indirectly, run tankage where no ready storage is available. Fire and fragment hazards govern (Tables **V5.E4.T3.**, **V5.E4.T6.**, **V5.E4.T7.**,

V5.E4.T8., and **V5.E4.T9.**) except in special cases as indicated in Tables **V5.E4.T3.** and **V5.E4.T5.**

V5.E4.5.10. Rest storage is temporary-type storage and most closely resembles bulk storage. It is a temporary parking location for barges, trailers, tank cars, and portable hold tanks used for topping operations when these units actually are not engaged in the operation, and for such vehicles when they are unable to empty their cargo promptly into the intended storage container. Fire and fragment hazards govern (Tables **V5.E4.T3.**, **V5.E4.T6.**, **V5.E4.T7.**, **V5.E4.T8.**, and **V5.E4.T9.**) except in special cases as indicated in Tables **V5.E4.T3.** and **V5.E4.T5.** The transporter becomes a part of that storage to which it is connected during energetic liquids transfer.

V5.E4.5.11. Run tankage (operating tankage) consists of the tank and other containers and associated piping used to hold the energetic liquids for direct feeding into the engine or device during operation. The contents of properly separated "run tanks" (operating tankage) and piping are normally considered on the basis of the pertinent hazards for the materials involved, except for quantities of incompatible materials that are or can be in a position to become mixed. Equivalent explosive weights must be used (Table **V5.E4.T5.**) for quantities of such materials subject to mixing unless provisions of paragraphs **V5.E4.5.6.2.1.** through **V5.E4.5.6.2.4.** are satisfied.

V5.E4.5.12. Maintain a 25-ft [7.6-m] clear zone to inhabited buildings, as a minimum, on each side of pipelines used for energetic liquids (excluding flammable or combustible liquids that exhibit normal fire hazards such as RP-1, JP-10, and Otto Fuel II). Tables **V5.E4.T3.**, **V5.E4.T7.**, **V5.E4.T8.**, and **V5.E4.T9.** apply, as appropriate.

V5.E4.6. QD STANDARDS. Since many energetic liquids are not classified as UN Class 1 explosives, conventional QD storage criteria do not generally apply to these materials. At the same time, the (non-Class 1) UN transportation hazard classifications for many energetic liquids appear to be inappropriate or inadequate for application to storage safety (based on available accident and test data). For example, hydrazine has a UN hazard classification of 8 (corrosive), while it also is subject to dangerous fire and explosive behavior. Thus, the implementation of QD criteria for energetic liquids is based on an independent determination of the predominant hazard presented by the material in the storage environment. The following standards are applicable to energetic liquids used for propulsion or operation of missiles, rockets, and other related devices.

V5.E4.6.1. Tables **V5.E4.T3.**, **V5.E4.T6.**, **V5.E4.T7.**, **V5.E4.T8.**, and **V5.E4.T9.** provide minimum distance requirements for storage of bulk quantities, and in some cases, pressure vessels and other commercial packagings of energetic liquids. In general, the minimum distance required by the material requiring the greatest distance must separate storage of different energetic liquids. In addition, take positive measures to control the flow of energetic liquids in the event of a leak or spill, to prevent possible fire propagation or accumulation of flammable liquids near other storage, or to prevent mixing of incompatible energetic liquids (except for specific hazardous locations identified in paragraph **V5.E4.5.6.**). Equivalent explosive weights apply for some materials as indicated in Tables **V5.E4.T3.** and **V5.E4.T5.** Fragment hazards

govern for some materials in certain packaging configurations. For the more conventional fuels and oxidizers, and also where minimum blast or fragment criteria are not required due to low confinement packaging, QD standards are adopted from OSHA and NFPA guidelines to account for normal fire protection principles.

V5.E4.6.2. For specific hazardous locations as defined in paragraph **V5.E4.5.6.**, equivalent explosive weights may apply. If so, consult Tables **V5.E4.T3.** and **V5.E4.T5.** with the combined energetic liquids weight subject to mixing and use distances found in Table **V3.E3.T1.** or **V3.E3.T4.** Enter the equivalent explosive weight in Table **V3.E3.T1.** or **V3.E3.T4.** QD standards for other conditions and equivalent explosive weights for any combination not contained in Table **V5.E4.T3.** or **V5.E4.T5.** will be determined by the controlling DoD Component.

V5.E4.6.3. **(Added)(AF)** AFSEC/SEW determines QD standards for other conditions and explosive equivalents for any combination not contained in Table **V5.E4.T3.** or **V5.E4.T5.**

V5.E4.7. CONTAMINATED ENERGETIC LIQUIDS

V5.E4.7.1. Exercise caution in the storage and handling of contaminated energetic liquids. Such contamination may increase the degree of hazard associated with the energetic liquids.

V5.E4.7.2. Isolate energetic liquids known to be contaminated or in a suspect condition and provide separate storage from all other energetic liquids pending laboratory analysis for verification of contamination and disposition requirements, if any.

Table V5.E4.T6. QD Criteria for OSHA/NFPA Class I-III Flammable and Combustible Energetic Liquids Storage in Detached Buildings or Tanks[a, b]

Quantity	IBD/PTRD	ILD/Aboveground IMD
	(ft)	(ft)
	[m]	*[m]*
Unlimited[c]	50[d, e] *15.2[d, e]*	Footnote f

a	Other guidelines for diking, tank or container construction, tank venting, and facility construction apply (except for Class III B combustible liquids, e.g., Otto Fuel II). Refer to section 1910.106 of Title 29, CFR and NFPA 30 for further guidance on liquid storage and fire protection.
b	Refer to section 1910.106 of Title 29, CFR and NFPA 30 for definition and explanation of OSHA/NFPA classification of flammable and combustible liquids.
c	Guidelines on interior storage configuration (for container storage inside buildings) also apply with these exceptions: 1. If the storage building is located at least 100 ft [30.5 m] from any exposed building (under the direct jurisdiction of a fire protection organization) or property line; or 2. If the storage building is located at least 200 ft [61 m] from any exposed building (not under the direct jurisdiction of a fire protection organization) or property line; or 3. For combustible liquids that will not exhibit sustained burning in bulk form, e.g., Otto Fuel II, as determined through American Society for Testing and Materials D 92 Standard Test Method for Flash and Fire Points by Cleveland Open Cup or comparable testing. Refer to section 1910.106 of Title 29, CFR and NFPA 30 for further guidance on liquid storage and fire protection.

Table V5.E4.T6. QD Criteria for OSHA/NFPA Class I-III Flammable and Combustible Energetic Liquids Storage in Detached Buildings or Tanks,[a, b] Continued

d	For container storage inside of a building, IBD/PTRD may be less than 50 ft [15.2 m] (to a minimum of 10 ft [3.05 m]) if the storage building is constructed of fire-resistive exterior walls having an NFPA fire resistance rating of 2 hours or more, according to NFPA 251.
e	For large tank storage, QD may be 25 ft [7.6 m] for tank capacities up to 100,000 gallons [378,541 liters], and 37.5 ft [11.4 m] for capacities between 100,001 gallons [378,545 liters] and 500,000 gallons [1,892,706 liters].
f	For flammable liquids container storage inside of a building, ILD/aboveground IMD is 50 ft [15.2 m] (except as in Footnote d), or for adjacent incompatible oxidizer storage, distances specified for energetic liquid oxidizers (Table **V5.E4.T7.**) or oxygen (Table **V5.E4.T8.**). For flammable liquids storage in fixed or large portable tanks, ILD/aboveground IMD is either (1) for compatible energetic liquids, equal to one-sixth of the sum of the diameters of the two adjacent tanks, or distances specified in Footnote e for adjacent container storage inside of a building; or (2) for adjacent incompatible oxidizer storage, distances specified for energetic liquid oxidizers (Table **V5.E4.T7.**) or oxygen (Table **V5.E4.T8.**). ECMs may be used to their physical capacity for storing flammable energetic liquids provided they comply with the construction and siting requirements of **Volume 2 – Enclosure 5**, and **Volumes 3**, **4**, and **5** of this manual, respectively, for HD 1.1. ECMs must be sited for a minimum of 100 lbs [45.4 kg] of HD 1.1 items using Tables **V3.E3.T5.** and **V3.E3.T6.**

Table V5.E4.T7. QD Criteria for Energetic Liquid Oxidizer (Excluding LO_2) Storage in Detached Buildings or Tanks[a, b]

NFPA Oxidizer Class[c]	Quantity	IBD/PTRD/ILD/ Aboveground IMD
	(lbs)	(ft)
	[kg]	*[m]*
2	up to 600,000	50
	up to 227,154	*15.2*
3	up to 400,000	75
	up to 181,436	*22.9*
4[d, e, f]	≤ 50	75
	< 22.7	*15.2*
	70	76
	31.8	*23.1*
	100	79
	45.4	*24.1*
	150	84
	68.0	*25.7*
	200	89
	90.7	*27.2*
	300	98
	136.1	*29.9*
	500	114
	226.8	*34.8*

Table V5.E4.T7. QD Criteria for Energetic Liquid Oxidizer (Excluding LO_2) Storage in Detached Buildings or Tanks,[a, b] Continued

NFPA Oxidizer Class[c]	Quantity	IBD/PTRD/ILD/ Aboveground IMD
	(lbs)	(ft)
	[kg]	*[m]*
4[d, e, f]	700	128
	317.5	*39.0*
	1,000	147
	453.6	*44.7*
	1,500	175
	680.4	*53.2*
	2,000	200
	907.2	*60.9*
	3,000	246
	1,360.8	*74.9*
	5,000	328
	2,268.0	*100.0*
	7,000	404
	3,175.1	*123.0*
	10,000	510
	4,535.9	*155.4*
	15,000	592
	6,803.9	*180.4*
	20,000	651
	9,071.8	*198.5*
	30,000	746
	13,607.7	*227.3*
	50,000	884
	22,679.5	*269.5*
	70,000	989
	31,751.3	*301.5*
	100,000	1,114
	45,359.0	*339.5*
	150,000	1,275
	68,038.5	*388.6*
	200,000	1,404
	90,718.0	*427.8*
	300,000	1,607
	136,077.0	*489.7*
	500,000	1,905
	226,795.0	*580.6*

Table V5.E4.T7. QD Criteria for Energetic Liquid Oxidizer (Excluding LO_2) Storage in Detached Buildings or Tanks,[a, b] Continued

a	QD requirements do not apply to storage of NFPA Class 2 and 3 oxidizers in approved fixed tanks. See NFPA 430 for criteria for storage of Class 2 or 3 oxidizers in approved fixed tanks.
b	Other requirements for interior storage configuration, building construction, diking, container materials, facility venting, etc. also apply. Refer to NFPA 430 for further guidance on oxidizer storage and fire protection.
c	Refer to NFPA 430 for definition and explanation of NFPA classification of oxidizers.
d	Multiple tanks containing NFPA Class 4 oxidizers may be located at distances less than those specified in this table; however, if the tanks are not separated from each other by 10 percent of the distance specified for the largest tank, then use the total contents of all tanks to calculate distances to other exposures.
e	The following equations may be used to determine distance/weights for other quantities:
	English EQNs (Quantity (W) in lbs, distance in ft; ln is exp [x] is e^x)
	W ≤ 10,000 lbs: Distance = $149.3*W^{(-0.41+0.059*\ln(W))}$ — EQN V5.E4.T7-1
	W > 10,000 lbs: Distance = $24*W^{1/3}$ — EQN V5.E4.T7-2
	Distance > 75 ft: $W = \exp[-313.18 + 206.53*(\ln(\text{Distance})) - 49.968*(\ln(\text{Distance}))^2 + 5.5354*(\ln(\text{Distance}))^3 - 0.2119*(\ln(\text{Distance}))^4]$ — EQN V5.E4.T7-3
	Metric EQNs (Quantity (W) in kg, distance in m; ln is exp [x] is e^x)
	W ≤4,535.9 kg: Distance = $34.2*W^{(-0.317+0.059*\ln(W))}$ — *EQN V5.E4.T7-4*
	W > 4,535.9 kg: Distance = $9.52*W^{1/3}$ — *EQN V5.E4.T7-5*
	Distance > 22.9 m: $W = \exp[-130.32 + 108.79*(\ln(\text{Distance})) - 32.587*(\ln(\text{Distance}))^2 + 4.3313*(\ln(\text{Distance}))^3 - 0.21111*(\ln(\text{Distance}))^4]$ — *EQN V5.E4.T7-6*
f	NFPA 430 requires sprinkler protection to be provided for storage of greater than 2,000 lbs [907.2 kg] of NFPA Class 4 oxidizers inside of a building.

Table V5.E4.T8. QD Criteria for LO_2 Storage in Detached Buildings or Tanks[a, b]

Quantity	IBD/PTRD	ILD/Aboveground IMD
	(ft)	(ft)
	[m]	*[m]*
Unlimited[c]	100	100[d]
	30.5	*30.5[d]*

a	In accordance with NFPA 251, distances do not apply where a protective structure having an NFPA fire resistance rating of at least 2 hours interrupts the line of sight between the oxygen system and the exposure. Refer to section 1910.106 of Title 29, CFR and NFPA 55 for further guidance.
b	Additional guidelines relating to equipment assembly and installation, facility design (diking), and other fire protection issues also apply. Refer to section 1910.106 of Title 29, CFR and NFPA 55 for further guidance.

Table V5.E4.T8. QD Criteria for LO_2 Storage in Detached Buildings or Tanks,[a, b] Continued

c	QD is independent of oxygen quantity.
d	Minimum ILD/IMD distance between adjacent compatible energetic liquids storage is 50 ft [15.2 m].

Table V5.E4.T9. QD Criteria for LH_2 and Bulk Quantities of Hydrazines[a]

Propellant Weight (W)	IBD/PTRD		ILD/Aboveground IMD[f, g]
	Unprotected[b, c]	Protected[d, e]	
(lbs)	(ft)	(ft)	(ft)
[kg]	*[m]*	*[m]*	*[m]*
≤ 100	600	80	30
≤ 45.4	*182.9*	*24.4*	*9.1*
150	600	90	34
68.0	*182.9*	*27.4*	*10.3*
200	600	100	37
90.7	*182.9*	*30.4*	*11.2*
300	600	113	42
136.1	*182.9*	*34.4*	*12.7*
500	600	130	49
226.8	*182.9*	*39.5*	*14.6*
700	600	141	53
317.5	*182.9*	*42.9*	*15.9*
1,000	600	153	57
453.6	*182.9*	*46.5*	*17.2*
1,500	600	166	62
680.4	*182.9*	*50.7*	*19.0*
2,000	600	176	66
907.2	*182.9*	*53.7*	*19.9*
3,000	600	191	72
1,360.8	*182.9*	*58.2*	*21.5*
5,000	600	211	79
2,268.0	*182.9*	*64.1*	*23.7*
7,000	600	224	84
3,175.1	*182.9*	*68.3*	*25.3*
10,000	603	239	90
4,535.9	*183.9*	*72.9*	*27.0*
15,000	691	258	97
6,803.9	*210.5*	*78.5*	*29.0*
20,000	760	272	102
9,071.8	*231.7*	*82.7*	*30.6*
30,000	870	292	110
13,607.7	*265.2*	*89.0*	*32.9*

Table V5.E4.T9. QD Criteria for LH_2 and Bulk Quantities of Hydrazines,[a] Continued

Propellant Weight (W)	IBD/PTRD		ILD/Aboveground IMD[f, g]
	Unprotected[b, c]	Protected[d, e]	
(lbs)	(ft)	(ft)	(ft)
[kg]	*[m]*	*[m]*	*[m]*
50,000	1,032	321	120
22,679.5	*314.5*	*97.6*	*36.1*
70,000	1,154	341	128
31,751.3	*351.8*	*103.8*	*38.4*
100,000	1,300	364	136
45,359.0	*396.2*	*110.7*	*41.0*
150,000	1,488	391	147
68,038.5	*453.6*	*119.1*	*44.1*
200,000	1,637	412	155
90,718.0	*499.2*	*125.5*	*46.4*
300,000	1,800	444	166
136,077.0	*548.6*	*135.1*	*50.0*
500,000	1,800	487	183
226,795.0	*548.6*	*148.2*	*54.8*
700,000	1,800	518	194
317,513.0	*548.6*	*157.6*	*58.3*
1,000,000[h]	1,800	552	207
453,590.0 [h]	*548.6*	*168.1*	*62.2*
1,500,000 [h]	1,800	594	223
680,385.0 [h]	*548.6*	*180.8*	*67.8*
2,000,000 [h]	1,800	626	235
907,180.0 [h]	*548.6*	*190.4*	*70.5*
3,000,000 [h]	1,800	673	252
1,360,770.0 [h]	*548.6*	*204.7*	*75.8*
5,000,000 [h]	1,800	737	276
2,267,950.0 [h]	*548.6*	*224.2*	*83.0*
7,000,000 [h]	1,800	782	293
3,175,130.0 [h]	*548.6*	*237.9*	*88.0*
10,000,000 [h]	1,800	832	312
4,535,900.0 [h]	*548.6*	*253.3*	*93.7*

a	Positive measures must be taken to prevent mixing of hydrogen or hydrazines and adjacent oxidizers in the event of a leak or spill.
b	Distances are necessary to provide reasonable protection from fragments of tanks or equipment that are expected to be thrown in event of a vapor phase explosion.

Table V5.E4.T9. QD Criteria for LH_2 and Bulk Quantities of Hydrazines,[a] Continued

c	English EQNs (W in lbs, distance in ft)		
	W ≤ 10,000 lbs:	Unprotected distance = 600 ft	
	10,000 < W ≤ 265,000 lbs:	Unprotected distance = $28*W^{1/3}$	EQN V5.E4.T9-1
	W > 265,000 lbs:	Unprotected distance = 1,800 ft	
	603 ft ≤ Unprotected distance < 1,798 ft:	W = $(\text{Unprotected distance}/28)^3$	EQN V5.E4.T9-2
	Metric EQNs (W in kg, distance in m)		
	W ≤ 4,535.9 kg:	*Unprotected distance = 182.9 m*	
	4,535.9 kg <W ≤120,201.4 kg:	*Unprotected distance = $11.11*W^{1/3}$*	*EQN V5.E4.T9-3*
	W > 120,201.4 kg:	*Unprotected distance = 548.6 m*	
	183.9 m ≤ Unprotected distance < 548.2 m:	*W = $(\text{Unprotected distance}/11.11)^3$*	*EQN V5.E4.T9-4*
d	The term "protected" means that protection from fragments is provided by terrain, effective barricades, nets, or other physical means.		
e	Distances are based on the recommended IBD given in U.S. Department of the Interior, Bureau of Mines Report 5707, and extrapolation of the 2 calories/square centimeter data on the 1-percent water vapor curve.		
	English EQNs (W in lbs, distance in ft; ln is exp [x] is e^x)		
	W ≤ 100 lbs:	Protected distance = 80 ft	
	100 lbs <W:	Protected distance = $-154.1 + 72.89*[\ln(W)] - 6.675*[\ln(W)]^2 + 0.369*[\ln(W)]^3$	EQN V5.E4.T9-5
	80 ft ≤ Protected Distance:	W = $\exp[311.367 - 215.761*(\ln(\text{protected distance})) + 55.1828*(\ln(\text{protected distance}))^2 - 6.1099*(\ln(\text{protected distance}))^3 + 0.25343*(\ln(\text{protected distance}))^4]$	EQN V5.E4.T9-6
	Metric EQNs (W in kg, Distance in m; ln is exp [x] is e^x)		
	W ≤ 45.4 kg:	*Protected distance = 24.4 m*	*EQN V5.E4.T9-7*
	45.4 kg <W:	*Protected distance = $-30.62 + 19.211*[\ln(W)] - 1.7678*[\ln(W)]^2 + 0.1124*[\ln(W)]^3$*	
	24.4 m ≤ Protected Distance:	*W = $\exp[122.38 - 108.8094*(\ln(\text{protected distance})) + 35.5517*(\ln(\text{protected distance}))^2 - 4.9055*(\ln(\text{protected distance}))^3 + 0.25343*(\ln(\text{protected distance}))^4]$*	*EQN V5.E4.T9-8*
f	ILD/aboveground IMD distances in this column apply for adjacent compatible (ELCG LB or LC) storage; for adjacent incompatible (other ELCG) storage, use IBD distances shown in previous columns. ECMs may be used to their physical capacity for storing hydrogen provided they comply with the construction and siting requirements of **Volume 2 – Enclosure 5**, and **Volumes 3**, **4**, and **5** of this manual for HD 1.1. ECMs must be sited for a minimum of 100 lbs [45.4 kg] of HD 1.1 items using Tables **V3.E3.T5.** and **V3.E3.T6**		

Table V5.E4.T9. QD Criteria for LH_2 and Bulk Quantities of Hydrazines,[a] Continued

g	Distances are 37.5 percent of "protected" column.
h	Extrapolations above 1,000,000 lbs [453,590 kg] extend well outside data included in U.S. Department of the Interior, Bureau of Mines Report 5707 from which the original QD tables were derived; however, they are supported by independent calculations and knowledge of like phenomena.

VOLUME 5 – ENCLOSURE 5: UNDERGROUND STORAGE OF AE

V5.E5.1. GENERAL

V5.E5.1.1. This enclosure provides QD standards for underground storage (e.g., natural caverns and below grade, excavated chambers) and storage facilities providing the overpressure confinement effects typically encountered in underground storage.

V5.E5.1.2. These criteria are only applicable when the minimum distance from the perimeter of a storage chamber to an exterior surface exceeds $0.25W^{1/3}$ [$0.10Q^{1/3}$]. (This minimum distance normally, but not always, equals the thickness of the earth cover.)

V5.E5.1.3. Use aboveground siting criteria when minimum distance criteria of paragraph **V5.E5.1.2.** cannot be met.

V5.E5.1.4. This enclosure addresses explosives safety criteria both with and without rupture of the earth cover.

V5.E5.1.5. QD siting requirements of this enclosure may be determined from the applicable equations or by interpolating between the table and figure entries.

V5.E5.1.6. Expected ground shock, debris, and airblast hazards from an accidental explosion in an underground storage facility depend on several variables, including the local geology and site-specific parameters. These parameters vary significantly from facility to facility. Siting distances other than those listed may be used when validated by approved experimental or analytical results showing equivalent protection to that required.

V5.E5.2. EXTERNAL QD DETERMINATIONS

V5.E5.2.1. QD Dependence on HD. (See section **V1.E7.2.** to determine the explosive weight for mixed HDs.)

V5.E5.2.1.1. HD 1.1. Distances will be determined from the total quantity of HD 1.1 in the individual chambers, unless the total quantity is subdivided to prevent rapid communication of an incident from one subdivision to another. Connected chambers containing HD 1.1 will be treated as a single chamber site, unless explosion communication is prevented by adequate subdivision or chamber separation.

V5.E5.2.1.2. HD 1.2. Except for primary fragments from openings to underground storage, external explosives safety hazards are not normally significant for HD 1.2. The safe distance for both IBD and PTRD is the IBD in Tables **V3.E3.T9.** through **V3.E3.T13.** for locations within 10 degrees to either side of the centerline of a tunnel opening. These criteria apply only to those detonations that occur where a line-of-sight path exists from the detonation point to any portion of the tunnel opening. For detonations that do not have a line-of-sight path

to the tunnel opening, or where the line-of-sight path is intercepted by a barricade beyond the opening, the IBD and PTRD are zero.

V5.E5.2.1.3. HD 1.3. HD 1.3 will be treated as HD 1.1 with an explosive equivalence of 100 percent for QD purposes. Any significant and validated differences in energy release per unit mass of HD 1.3 from that of TNT may be considered.

V5.E5.2.1.4. HD 1.4. External explosives safety hazards are not normally significant for HD 1.4. Accordingly, external QD criteria do not apply for HD 1.4.

V5.E5.2.1.5. HD 1.5. HD 1.5 will be treated as HD 1.1 with an explosive equivalence of 100 percent for QD purposes.

V5.E5.2.1.6. HD 1.6. HD 1.6 will be treated as HD 1.2.

V5.E5.2.2. QD Reference Points

V5.E5.2.2.1. Distances determined by blast or debris exiting from tunnel openings is the minimum distance measured from the openings to the nearest wall or point of the location to be protected. Use extended centerlines of the openings as reference lines for directional effects.

V5.E5.2.2.2. Distances determined for airblast and debris produced by breaching of the chamber cover must be the minimum distance from an exterior point defined by chamber cover thickness, on the ground surface above the storage chamber to the nearest wall or point of the location to be protected. For configurations where the storage chambers are not distinct from the access tunnel**,** the distance is the shortest distance from the tunnel roof directly above the charge to the surface.

V5.E5.2.2.3. Distances determined for ground shock must be the minimum distance measured from the nearest wall of the storage chamber to the location to be protected.

V5.E5.2.3. IBD. IBD for HD 1.1 must be the largest of those distances required for protection against ground shock, debris, and airblast as defined in paragraphs **V5.E5.2.3.1.** through **V5.E5.2.3.3.6.**

V5.E5.2.3.1. Ground Shock

V5.E5.2.3.1.1. For protection of residential buildings against significant structural damage by ground shock, the maximum particle velocity induced in the ground at the building site must not exceed:

V5.E5.2.3.1.1.1. 2.4 inches per second (ips) [6.1 centimeters (cm)/second (s)] in soil.

V5.E5.2.3.1.1.2. 4.5 ips [11.4 cm/s] in weak rock.

V5.E5.2.3.1.1.3. 9.0 ips [22.9 cm/s] in strong rock.

V5.E5.2.3.1.2. The values in paragraphs **V5.E5.2.3.1.1.1.** through **V5.E5.2.3.1.1.3.** form the basis for the following equations (D_{ig} is in ft and W is the explosive quantity in lbs [D_{ig} is in m and Q is the explosive quantity in kg]):

V5.E5.2.3.1.2.1. For sitings in moderately strong to strong rock with chamber loading densities (NEWQD/chamber internal volume), w, of 3.0 lb/cubic feet (ft^3) [48.1 kg/cubic meters (m^3)] or less, the IBD for ground shock, D_{ig}, is as shown in Figure **V5.E5.F1.**

Figure V5.E5.F1. D_{ig}, Moderately Strong to Strong Rock ($w \leq 3.0$ lb/ft^3 [48.1 kg/m^3])

$D_{ig} = 5.8*W^{1/3}$	English EQN V5.E5.F1-1
$D_{ig} = 2.30*Q^{1/3}$	*Metric EQN V5.E5.F1-2*

V5.E5.2.3.1.2.2. For higher loading densities in chambers sited in moderately strong to strong rock, and for all loading densities in other materials, the IBD for ground shock, D_{ig}, is as shown in Figure **V5.E5.F2.** (See paragraph **V5.E5.2.3.1.2.3.** for values of decoupling factor, f_g.)

Figure V5.E5.F2. D_{ig}, Moderately Strong to Strong Rock ($w > 3.0$ lb/ft^3 [48.1 kg/m^3]) and Other Materials

$D_{ig} = 12.5*f_g*W^{4/9}$ (Moderately strong to strong rock)	English EQN V5.E5.F2-1
$D_{ig} = 5.41*f_g*Q^{4/9}$ *(Moderately strong to strong rock)*	*Metric EQN V5.E5.F2-2*
$D_{ig} = 11.1*f_g*W^{4/9}$ (Weak rock)	English EQN V5.E5.F2-3
$D_{ig} = 4.81*f_g*Q^{4/9}$ *(Weak rock)*	*Metric EQN V5.E5.F2-4*
$D_{ig} = 2.1*f_g*W^{4/9}$ (Soil)	English EQN V5.E5.F2-5
$D_{ig} = 0.91*f_g*Q^{4/9}$ *(Soil)*	*Metric EQN V5.E5.F2-6*

V5.E5.2.3.1.2.3. The dimensionless decoupling factor, f_g, depends on chamber loading density, w (lb/ft^3 [kg/m^3]), and is as shown in Figure **V5.E5.F3.** Values of D_{ig} and D_{ig}/f_g are given in Table **V5.E5.T10.**; values of f_g are shown in Table **V5.E5.T11.**; alternate values for D_{ig} may be used only when justified by site-specific ground shock data.

Figure V5.E5.F3. Decoupling Factor, f_g

$f_g = 0.267*w^{0.3}$	English EQN V5.E5.F3-1
$f_g = 0.11604*w^{0.3}$	*Metric EQN V5.E5.F3-2*

V5.E5.2.3.2. Debris. (See section **V2.E5.8.** for special design considerations.)

Table V5.E5.T10. Distances to Protect Against Ground Shock

NEWQD	Soil	Weak Rock	Moderately Strong to Strong Rock	All Rock w ≤ 3 lb/ft^3 *[w ≤ 48.1 kg/m^3]*
	D_{ig}/f_g			D_{ig}
(lbs) *[kg]*	(ft) *[m]*	(ft) *[m]*	(ft) *[m]*	(ft) *[m]*
1,000 *453.6*	45 *13.8*	239 *72.9*	269 *82.0*	58 *17.7*
1,500 *680.4*	54 *16.5*	286 *87.3*	322 *98.2*	66 *20.2*
2,000 *907.2*	62 *18.8*	325 *99.2*	366 *111.6*	73 *22.3*
3,000 *1,361*	74 *22.5*	390 *118.8*	439 *133.7*	84 *25.5*
5,000 *2,268*	93 *28.2*	489 *149.1*	551 *167.7*	99 *30.2*
7,000 *3,175*	107 *32.8*	568 *173.2*	640 *194.8*	111 *33.8*
10,000 *4,536*	126 *38.4*	665 *345.3*	749 *228.2*	125 *38.1*
15,000 *6,804*	151 *46.0*	797 *243.0*	897 *273.3*	143 *43.6*
20,000 *9,072*	171 *52.2*	906 *276.1*	1,020 *528.4*	157 *48.0*
30,000 *13,608*	205 *62.6*	1,084 *330.7*	1,221 *371.9*	180 *54.9*
50,000 *22,680*	257 *78.5*	1,361 *414.9*	1,532 *466.7*	214 *65.1*
70,000 *31,751*	299 *91.2*	1,580 *481.9*	1,779 *542.0*	239 *72.8*
100,000 *45,359*	350 *106.8*	1,852 *564.6*	2,085 *635.1*	269 *82.0*
150,000 *68,039*	419 *127.9*	2,217 *676.1*	2,497 *760.5*	308 *93.9*
200,000 *90,718*	477 *145.4*	2,520 *768.4*	2,837 *864.2*	339 *103.3*
300,000 *136,077*	571 *174.1*	3,017 *920.1*	3,398 *1,034.9*	388 *118.3*
500,000 *226,795*	716 *218.4*	3,786 *1,154.6*	4,264 *1,298.6*	460 *140.3*

Table V5.E5.T10. Distances to Protect Against Ground Shock, Continued

NEWQD	Soil	Weak Rock	Moderately Strong to Strong Rock	All Rock w ≤ 3 lb/ft^3 *[w < 48.1 kg/m^3]*
	D_{ig}/f_g			D_{ig}
(lbs) *[kg]*	(ft) *[m]*	(ft) *[m]*	(ft) *[m]*	(ft) *[m]*
700,000 *317,513*	832 *253.7*	4,397 *1,340.8*	4,951 *1,508.1*	515 *156.9*
1,000,000 *453,590*	975 *297.2*	5,152 *1,571.2*	5,802 *1,767.1*	580 *176.7*

Table V5.E5.T11. Functions of Loading Density

Loading Density, w (lb/ft^3) *[kg/m^3]*	Ground Shock f_g	Debris f_d
1 *16.0*	0.267	0.600
1.5 *24.0*	0.301	0.645
2 *32.0*	0.328	0.680
3 *48.1*	0.371	0.730
5 *80.1*	0.432	0.800
7 *112.1*	0.481	0.850
10 *160.2*	0.532	0.910
15 *240.3*	0.601	0.977
20 *320.3*	0.655	1.030
30 *480.5*	0.740	1.110
50 *800.9*	0.862	1.210
70 *1,121.2*	0.954	1.290
100 *1,601.7*	1.062	1.370

V5.E5.2.3.2.1. A minimum IBD of 1,800 ft [548.6 m] for debris throw from an opening must apply within 10 degrees to either side of the centerline axis of that opening, unless positive means are used to prevent or control the debris throw.

V5.E5.2.3.2.2. The distance D_{id} that is required for protection of inhabited areas against the effects of debris thrown from breaching of the cover material over a detonation depends on the thickness of the cover (C) over the storage chamber. The C_c is defined as $2.5W^{1/3}$ [$1.0Q^{1/3}$].

V5.E5.2.3.2.2.1. When $C_c \geq 2.5W^{1/3}$ [$1.0Q^{1/3}$], debris from a surface breach need not be considered.

V5.E5.2.3.2.2.2. When $C_c < 2.5W^{1/3}$ [$1.0Q^{1/3}$], then the debris distance, D_{id}, will be calculated using the equations in Figure **V5.E5.F4.**

Figure V5.E5.F4. D_{id}, $C_c < 2.5W^{1/3}$ [$1.0Q^{1/3}$])

$D_{id} = f_d * f_c * W^{0.41}$	English EQN V5.E5.F4-1
$D_{id} = f_d * f_c * Q^{0.41}$	*Metric EQN V5.E5.F4-2*

V5.E5.2.3.2.2.3. The dimensionless, decoupling factor, f_d, depends on chamber loading density, w (lb/ft^3 [kg/m^3]), and is as shown in Figure **V5.E5.F5.**

Figure V5.E5.F5. Decoupling Factor, f_d

$f_d = 0.6 * w^{0.18}$	English EQN V5.E5.F5-1
$f_d = 0.3615 * w^{0.18}$	*Metric EQN V5.E5.F5-2*

V5.E5.2.3.2.2.4. Values of f_d are shown in Table **V5.E5.T11.** The coupling factor, f_c, is related to the type of rock around the storage chamber and the scaled cover thickness, C. Values of f_c are given in Table **V5.E5.T12.**

V5.E5.2.3.3. Airblast. (See section **V2.E5.8.** for special design considerations.)

V5.E5.2.3.3.1. An explosion in an underground storage chamber may produce external airblast from two sources; the exit of blast from existing openings (tunnel entrances, ventilation shafts, etc.) and the rupture or breach of the chamber cover by the detonation. Required IBD is independently determined for each of these airblast sources, with the maximum IBD used for siting. If the chamber cover thickness is less than C_c given in paragraph **V5.E5.2.3.2.**, some external airblast will be produced depending on the cover thickness. Use the following to determine IBD for airblast produced by breaching of the chamber cover:

V5.E5.2.3.3.1.1. $C \leq 0.25W^{1/3}$ ft [$0.10Q^{1/3}$ m]: Use IBD for surface burst of bare explosives charge (Table **V3.E3.T1.**, Footnote d).

Table V5.E5.T12. Debris Dispersal Function

Scaled Earth Cover (C)	Earth Cover Function, f_c	
	Hard Rock[a]	Soft Rock[a]
($ft/lb^{1/3}$)	($ft/lb^{0.41}$)	($ft/lb^{0.41}$)
[$m/kg^{1/3}$]	*[$m/kg^{0.41}$]*	*[$m/kg^{0.41}$]*
0.3	9.51	9.80
0.12	*4.01*	*4.13*
0.4	10.25	10.69
0.16	*4.32*	*4.51*
0.5	10.94	11.52
0.20	*4.61*	*4.85*
0.6	11.49	12.08
0.24	*4.84*	*5.09*
0.7	11.89	12.28
0.28	*5.01*	*5.17*
0.8	12.09	12.09
0.32	*5.10*	*5.10*
0.9	12.11	11.55
0.36	*5.10*	*4.87*
1	11.95	10.72
0.40	*5.04*	*4.52*
1.25	10.91	7.99
0.50	*4.60*	*3.37*
1.5	9.31	5.38
0.60	*3.92*	*2.27*
1.75	7.58	3.68
0.69	*3.20*	*1.55*
2	6.04	2.79
0.79	*2.54*	*1.18*
2.25	4.78	2.13
0.89	*2.01*	*0.90*
2.5	3.76	1.54
0.99	*1.58*	*0.65*

a English EQNs (Scaled earth cover, C in $ft/lb^{1/3}$, f_c in $ft/lb^{0.41}$)

$0.25\ ft/lb^{1/3} < C \leq 2.5\ ft/lb^{1/3}$

Hard Rock:

$f_c = 8.0178 - 0.1239*C + 27.1578*C^2 - 40.1461*C^3 + 21.9018*C^4 - 5.3529*C^5 + 0.4948*C^6$ EQN V5.E5.T12-1

Soft Rock:

$f_c = 10.8116 - 25.0685*C + 113.9591*C^2 - 168.1092*C^3 + 107.1033*C^4 - 31.5032*C^5 + 3.5251*C^6$ EQN V5.E5.T12-2

Table V5.E5.T12. Debris Dispersal Function, Continued

a	*Metric EQNs (Scaled earth cover, C in $m/kg^{1/3}$, f_c in $m/kg^{0.41}$)*	
	$0.10\ m/kg^{1/3} < C < 1.0\ m/kg^{1/3}$	
	Hard Rock:	
	$f_c = 3.3794 - 0.1316*C + 72.7376*C^2 - 271.0478*C^3 + 372.7526*C^4 - 229.651*C^5 + 53.5115*C^6$	EQN V5.E5.T12-3
	Soft Rock:	
	$f_c = 4.5570 - 26.6351*C + 305.2201*C^2 - 1134.995*C^3 + 1822.82*C^4 - 1351.556*C^5 + 381.2317*C^6$	EQN V5.E5.T12-4

V5.E5.2.3.3.1.2. $0.25W^{1/3} < C \leq 0.50W^{1/3}$ ft [$0.10Q^{1/3} < C \leq 0.20Q^{1/3}$ m]: Use 1/2 of IBD for surface burst of bare explosives charge.

V5.E5.2.3.3.1.3. $0.50W^{1/3} < C \leq 0.75W^{1/3}$ ft [$0.20Q^{1/3} < C \leq 0.30Q^{1/3}$ m]: Use 1/4 of IBD for surface burst of bare explosives charge.

V5.E5.2.3.3.1.4. $0.75W^{1/3}$ ft [$0.30Q^{1/3}$ m] < C: Airblast hazards from blast through the earth cover are negligible relative to ground shock or debris hazards.

V5.E5.2.3.3.2. Overpressure and debris hazards must be determined for each facility opening whose cross-section area is 5 percent or more of that of the largest opening.

V5.E5.2.3.3.2.1. Distance versus overpressure along the centerline axis of a single opening is as shown in Figure **V5.E5.F6.**

Figure V5.E5.F6. Distance Versus Overpressure Along the Centerline Axis

$R(\theta=0) = 149.3*D_{HYD}*((W/V_E)^{0.5}/P_{SO})^{1/1.4}$	English EQN V5.E5.F6-1
$R(\theta=0) = 220.191*D_{HYD}*((W/V_E)^{0.5}/P_{SO})^{1/1.4}$	*Metric EQN V5.E5.F6-2*

where:

- $R(\theta=0)$: Distance from opening (ft) [m] along the centerline axis
- D_{HYD}: Effective hydraulic diameter that controls dynamic flow issuing from the opening (ft) [m] (compute D_{HYD}, using the minimum cross-sectional area of the tunnel that is located within five tunnel diameters of the opening, as $D_{HYD} = 4*A/P$, where A is the area (square feet) [square meter] and P is the perimeter (ft) [m])
- P_{SO}: Overpressure at distance R (psi) [kPa]
- W: MCE in lb [kg]
- V_E: Total volume engulfed by the blast wavefront within the tunnel system at the time the wavefront arrives at the point of interest (ft^3) [m^3]

V5.E5.2.3.3.2.2. Distance versus overpressure off the centerline axis of the opening is as shown in Figure **V5.E5.F7.**

Figure V5.E5.F7. Distance Versus Overpressure Off the Centerline Axis

$R(\theta) = R(\theta=0)/(1 + (\theta/56)^2)^{1/1.4}$ (EQN V5.E5.F7-1)

where:

$R(\theta=0)$: Distance along the centerline axis, and θ is the horizontal angle from the centerline (degrees)

V5.E5.2.3.3.3. English EQN V5.E5.F6-1 [metric EQN V5.E5.F6-2] and EQN V5.E5.F7-1 show that the distance providing protection from an overpressure exceeding P_{SO} depends on the D_{HYD}, and the angle from the centerline axis for the location of interest. Table **V5.E5.T13.** gives the ratio of off-axis to on-axis distances.

V5.E5.2.3.3.4. Find required IBD distances for airblast using the appropriate equations discussed in paragraph **V5.E5.2.3.3.1.**, English EQN V5.E5.F6-1 [metric EQN V5.E5.F6-2] and EQN V5.E5.F7-1, with the criteria that the total incident overpressure at IBD must not exceed that shown in Figure **V5.E5.F8.**

Figure V5.E5.F8. Overpressure at IBD

P_{SO} = 1.2 psi	for W $\leq$ 100,000 lbs	
P_{SO} = 8.27 kPa	*for W $\leq$ 45,359 kg*	
$P_{SO} = 44.57*W^{-0.314}$ psi	for 100,000 <W $\leq$ 250,000 lbs	English EQN V5.E5.F8-1
$P_{SO} = 239.8*W^{-0.314}$ kPa	*for 45,359 < W $\leq$ 113,397.5 kg*	*Metric EQN V5.E5.F8-2*
P_{SO} = 0.9 psi	for W > 250,000 lbs	
P_{SO} = 6.21 kPa	*for W > 113,397.5 kg*	

V5.E5.2.3.3.5. For the overpressure of paragraph **V5.E5.2.3.3.4.**, on-axis IBD is as shown in Figure **V5.E5.F9.**

Figure V5.E5.F9. On-axis IBD

$R(\theta=0) = 131.1*D_{HYD}*(W/V_E)^{1/2.8}$	for W $\leq$ 100,000 lbs	English EQN V5.E5.F9-1
$R(\theta=0) = 48.683*D_{HYD}*(W/V_E)^{1/2.8}$	*for W $\leq$ 45,359 kg*	*Metric EQN V5.E5.F9-2*
$R(\theta=0) = 9.91*D_{HYD}*W^{0.581}/V_E^{0.357}$	for 100,000 < W $\leq$ 250,000 lbs	English EQN V5.E5.F9-3
$R(\theta=0) = 4.395*D_{HYD}*W^{0.581}/V_E^{0.357}$	*for 45,359 < W $\leq$ 113,397.5 kg*	*Metric EQN V5.E5.F9-4*
$R(\theta=0) = 161.0*D_{HYD}*(W/V_E)^{1/2.8}$	for W > 250,000 lbs	English EQN V5.E5.F9-5
$R(\theta=0) = 59.787*D_{HYD}*(W/V_E)^{1/2.8}$	*for W > 113,397.5 kg*	*Metric EQN V5.E5.F9-6*

V5.E5.2.3.3.6. QD distances for IBD for airblast from openings may be determined from the equations in Figure **V5.E5.F9.** or from entries in Tables **V5.E5.T14.** and **V5.E5.T15.**

Table V5.E5.T13. Off-axis Distance Ratios

Angle Off-axis (θ) (degrees)	Distance Ratio[a] (R(θ)/R(θ=0))
0	1.000
5	0.994
10	0.978
15	0.952
20	0.918
25	0.878
30	0.835
35	0.790
40	0.745
45	0.701
50	0.658
55	0.617
60	0.579
65	0.544
70	0.511
75	0.480
80	0.452
85	0.426
90	0.402
100	0.359
110	0.323
120	0.292
130	0.266
140	0.243
150	0.223
160	0.206
170	0.190
180	0.177

a	$R(\theta)/R(\theta=0) = [1+(\theta/56)^2]^{(-1/1.4)}$	EQN V5.E5.T13-1

Table V5.E5.T14. Values for Ratio, $D_{HYD}/V_E^{1/2.8}$

V_E	$D_{HYD}/V_E^{1/2.8}$ (D_{HYD} in ft [m], V_E in ft^3 [m^3])					
(ft^3)	10	15	20	25	30	35
[m^3]	*3.05*	*4.57*	*6.10*	*7.62*	*9.14*	*10.67*
1,000	0.8483	1.2725	1.6967	2.1209	2.5450	2.9692
28.32	*3.0298*	*4.5447*	*6.0596*	*7.5745*	*9.0894*	*10.6043*
1,500	0.7340	1.1010	1.4680	1.8349	2.2019	2.5689
42.48	*2.6213*	*3.9320*	*5.2427*	*6.5533*	*7.8640*	*9.1747*
2,000	0.6623	0.9935	1.3246	1.6558	1.9869	2.3181
56.63	*2.3654*	*3.5481*	*4.7308*	*5.9135*	*7.0962*	*8.2788*

Table V5.E5.T14. Values for Ratio, $D_{HYD}/V_E^{1/2.8}$, Continued

V_E	$D_{HYD}/V_E^{1/2.8}$ (D_{HYD} in ft [m], V_E in ft^3 [m^3])					
(ft^3)	10	15	20	25	30	35
[m^3]	*3.05*	*4.57*	*6.10*	*7.62*	*9.14*	*10.67*
3,000	0.5730	0.8595	1.1460	1.4326	1.7191	2.0056
84.95	*2.0465*	*3.0698*	*4.0930*	*5.1163*	*6.1395*	*7.1628*
5,000	0.4775	0.7162	0.9549	1.1937	1.4324	1.6711
141.58	*1.7052*	*2.5578*	*3.4104*	*4.2630*	*5.1157*	*5.9683*
7,000	0.4234	0.6351	0.8468	1.0585	1.2702	1.4819
198.22	*1.5121*	*2.2682*	*3.0243*	*3.7803*	*4.5364*	*5.2925*
10,000	0.3728	0.5591	0.7455	0.9319	1.1183	1.3047
283.17	*1.3313*	*1.9969*	*2.6626*	*3.3282*	*3.9938*	*4.6595*
15,000	0.3225	0.4838	0.6450	0.8063	0.9675	1.1288
424.75	*1.1518*	*1.7277*	*2.3036*	*2.8795*	*3.4554*	*4.0313*
20,000	0.2910	0.4365	0.5820	0.7275	0.8731	1.0186
566.34	*1.0393*	*1.5590*	*2.0787*	*2.5984*	*3.1180*	*3.6377*
30,000	0.2518	0.3777	0.5036	0.6295	0.7554	0.8812
849.51	*0.8992*	*1.3488*	*1.7985*	*2.2481*	*2.6977*	*3.1473*
50,000	0.2098	0.3147	0.4196	0.5245	0.6294	0.7343
1,415.84	*0.7493*	*1.1239*	*1.4985*	*1.8732*	*2.2478*	*2.6224*
70,000	0.1860	0.2791	0.3721	0.4651	0.5581	0.6511
1,982.18	*0.6644*	*0.9966*	*1.3289*	*1.6611*	*1.9933*	*2.3255*
100,000	0.1638	0.2457	0.3276	0.4095	0.4914	0.5733
2,831.68	*0.5850*	*0.8774*	*1.1699*	*1.4624*	*1.7549*	*2.0474*
150,000	0.1417	0.2126	0.2834	0.3543	0.4251	0.4960
4,247.53	*0.5061*	*0.7592*	*1.0122*	*1.2653*	*1.5183*	*1.7714*
200,000	0.1279	0.1918	0.2557	0.3197	0.3836	0.4476
5,663.37	*0.4567*	*0.6850*	*0.9134*	*1.1417*	*1.3701*	*1.5984*
300,000	0.1106	0.1660	0.2213	0.2766	0.3319	0.3872
8,495.05	*0.3951*	*0.5927*	*0.7902*	*0.9878*	*1.1854*	*1.3829*
500,000	0.0922	0.1383	0.1844	0.2305	0.2766	0.3226
14,158.42	*0.3292*	*0.4938*	*0.6585*	*0.8231*	*0.9877*	*1.1523*
700,000	0.0817	0.1226	0.1635	0.2044	0.2452	0.2861
19,821.79	*0.2919*	*0.4379*	*0.5839*	*0.7299*	*0.8758*	*1.0218*
1,000,000	0.0720	0.1080	0.1439	0.1799	0.2159	0.2519
28,316.84	*0.2570*	*0.3855*	*0.5141*	*0.6426*	*0.7711*	*0.8996*
1,500,000	0.0623	0.0934	0.1245	0.1557	0.1868	0.2179
42,475.27	*0.2224*	*0.3336*	*0.4448*	*0.5559*	*0.6671*	*0.7783*
2,000,000	0.0562	0.0843	0.1124	0.1405	0.1686	0.1967
56,633.69	*0.2007*	*0.3010*	*0.4013*	*0.5017*	*0.6020*	*0.7023*
3,000,000	0.0486	0.0729	0.0972	0.1215	0.1458	0.1701
84,950.53	*0.1736*	*0.2604*	*0.3472*	*0.4340*	*0.5208*	*0.6076*
5,000,000	0.0405	0.0608	0.0810	0.1013	0.1215	0.1418
141,584.22	*0.1447*	*0.2170*	*0.2893*	*0.3617*	*0.4340*	*0.5063*

Table V5.E5.T15. Values for Ratio, $R(\theta)/(D_{HYD}/V_E^{1/2.8})$, Without Mitigating Devices[a, b]

NEWQD	$R(\theta)/(D_{HYD}/V_E^{1/2.8})$[c]					
	Horizontal Angle from Centerline Axis (Degrees)					
(lbs) *[kg]*	0	30	60	90	120	180
1,000	1,545	1,290	895	621	452	273
453.6	*432.8*	*361.4*	*250.7*	*173.9*	*126.6*	*76.4*
1,500	1,786	1,491	1,034	718	522	315
680.4	*500.2*	*417.7*	*289.7*	*201.0*	*146.3*	*88.3*
2,000	1,979	1,653	1,146	795	579	349
907.2	*554.3*	*462.9*	*321.1*	*222.8*	*162.1*	*97.9*
3,000	2,287	1,910	1,325	919	669	404
1,361	*640.7*	*535.0*	*371.1*	*257.5*	*187.4*	*113.1*
5,000	2,745	2,292	1,590	1,103	803	485
2,268	*768.9*	*642.1*	*445.4*	*309.0*	*224.9*	*135.8*
7,000	3,096	2,585	1,793	1,244	905	547
3,175	*867.1*	*724.1*	*502.2*	*348.5*	*253.6*	*153.1*
10,000	3,516	2,936	2,037	1,413	1,028	621
4,536	*984.9*	*822.5*	*570.5*	*395.8*	*288.0*	*173.9*
15,000	4,064	3,394	2,354	1,633	1,188	718
6,804	*1,138.4*	*950.6*	*659.4*	*457.5*	*332.9*	*201.0*
20,000	4,504	3,761	2,609	1,810	1,317	795
9,072	*1,261.5*	*1,053.5*	*730.7*	*507.0*	*368.9*	*222.8*
30,000	5,206	4,347	3,015	2,092	1,522	919
13,608	*1,458.1*	*1,217.6*	*844.6*	*586.0*	*426.4*	*257.5*
50,000	6,247	5,217	3,619	2,511	1,827	1,103
22,680	*1,749.9*	*1,461.3*	*1,013.6*	*703.3*	*511.7*	*309.0*
70,000	7,045	5,883	4,081	2,831	2,060	1,244
31,751	*1,973.4*	*1,647.9*	*1,143.0*	*793.1*	*577.1*	*348.5*
100,000	8,002	6,683	4,635	3,216	2,340	1,413
45,359	*2,241.5*	*1,871.8*	*1,298.3*	*900.8*	*655.5*	*395.8*
150,000	9,249	7,724	5,357	3,717	2,705	1,633
68,039	*2,837.8*	*2,369.8*	*1,643.7*	*1,140.5*	*829.9*	*501.1*
200,000	11,977	10,002	6,937	4,813	3,502	2,115
90,718	*3,354.9*	*2,801.6*	*1,943.2*	*1,348.3*	*981.1*	*592.4*
300,000	14,550	12,150	8,427	5,848	4,255	2,569
136,077	*4,071.9*	*3,400.4*	*2,358.5*	*1,636.5*	*1,190.8*	*719.0*
500,000	17,462	14,582	10,114	7,018	5,106	3,083
226,795	*4,886.9*	*4,081.0*	*2,830.5*	*1,964.0*	*1,429.1*	*862.9*
700,000	19,691	16,444	11,406	7,914	5,759	3,477
317,513	*5,510.9*	*4,602.1*	*3,192.0*	*2,214.8*	*1,611.6*	*973.1*
1,000,000	22,367	18,678	12,955	8,989	6,541	3,949
453,590	*6,259.5*	*5,227.3*	*3,625.6*	*2,515.7*	*1,830.5*	*1,105.3*

Table V5.E5.T15. Values for Ratio, $R(\theta)/(D_{HYD}/V_E^{1/2.8})$, Without Mitigating Devices,[a, b] Continued

a	IBD for airblast from openings, without airblast mitigating devices, is determined by multiplying the ratio $R(\theta)/(D_{HYD}/V_{E_{1/2.8}})$ in this table (for a given NEWQD and horizontal angle from the centerline axis) by the ratio $D_{HYD}/V_E^{1/2.8}$ (as determined from Table **V5.E5.T14.** for a given D_{HYD}		
b	For IBD reductions with mitigating devices, see paragraph **V2.E5.8.3.**		
c	English EQNs (See English EQN V5.E5.F6-1 for variable units)		
	$R(\theta)/(D_{HYD}/V_{E_{1/2.8}}) = 145.5\{W^{0.5}/[P_{SO}(1+(\theta/30)^2)]\}^{1/1.4}$		EQN V5.E5.T15-1
	where: $P_{SO} = 1.2$ psi	$W \leq 100{,}000$ lbs	
	$P_{SO} = 44.57*W^{-0.314}$ psi	$100{,}000 < W \leq 250{,}000$ lbs	EQN V5.E5.T15-2
	$P_{SO} = 0.9$ psi	$W > 250{,}000$ lbs	
	Metric EQNs (See Metric EQN V5.E5.F6-2 for variable units)		
	$R(\theta)/(D_{HYD}/V_{E_{1/2.8}}) = 145.5\{W^{0.5}/[P_{SO}(1+(\theta/30)^2)]\}^{1/1.4}$		*EQN V5.E5.T15-3*
	where: $P_{SO} = 8.27$ *kPa*	$W \leq 45{,}359$ *kg*	
	$P_{SO} = 239.8*W^{-0.314}$ *kPa*	$45{,}359 < W \leq 113{,}397.5$ *kg*	*EQN V5.E5.T15-4*
	$P_{SO} = 6.21$ *kPa*	$W > 113{,}397.5$ *kg*	

V5.E5.2.4. PTRD. PTRD for HD 1.1 is 60 percent of IBD for ground shock, debris, or airblast, whichever is greater.

V5.E5.2.5. ILD. ILD for HD 1.1 is the greater of the following:

V5.E5.2.5.1. Ground Shock. Does not apply.

V5.E5.2.5.2. Debris. For locations within 10 degrees of either side of the centerline of a tunnel opening, site intraline facilities at IBD (see paragraph **V5.E5.2.3.**). QD criteria for debris are not applicable to locations outside 10 degrees of either side of the centerline axis of an opening.

V5.E5.2.5.3 Airblast. Overpressure at barricaded and unbarricaded ILD must not exceed 12 psi [82.7 kPa] and 3.5 psi [24.1 kPa], respectively.

V5.E5.2.6. Distance to AGMs for HD 1.1

V5.E5.2.6.1. Ground Shock. Does not apply.

V5.E5.2.6.2. Debris. For locations within 10 degrees of either side of the centerline of an opening, site AGMs at IBD (see paragraph **V5.E5.2.3.**). QD criteria for debris from rupture of the chamber cover are not applicable.

V5.E5.2.6.3. Airblast. Overpressure at barricaded and unbarricaded AGM distance must not exceed 27 and 8 psi [186.2 and 55.2 kPa], respectively.

V5.E5.2.7. Distance to ECMs for HD 1.1

V5.E5.2.7.1. Ground Shock. Does not apply.

V5.E5.2.7.2. Debris. QD criteria for debris from rupture of the chamber cover are not applicable. QD criteria for debris exiting from an opening are not applicable, if the magazine is oriented for side-on or rear-on exposures to the debris; however, the criteria do apply for frontal exposures. Site ECM that are located within 10 degrees of either side of the centerline of an opening and oriented for a frontal debris exposure at IBD (see paragraph **V5.E5.2.3.**).

V5.E5.2.7.3. Airblast. These sitings are based on the strength of the ECM's headwall and doors that are under consideration, and the overpressures calculated using English EQN V5.E5.F6-1 [metric EQN V5.E5.F6-2], and EQN V5.E5.F7-1.

V5.E5.2.7.3.1. Head-on Exposure Criteria

V5.E5.2.7.3.1.1. 7-Bar ECM: Site where p_{SO} is $\leq$ 29 psi [200 kPa].

V5.E5.2.7.3.1.2. 3-Bar ECM: Site where p_{SO} is $\leq$ 16 psi [110.3 kPa].

V5.E5.2.7.3.1.3. Undefined ECM: Site where p_{SO} is $\leq$ 3.5 psi [24.1 kPa].

V5.E5.2.7.3.2. Other Than Head-on Exposure. Site all ECMs where p_{SO} is $\leq$ 45 psi [310.3 kPa].

VOLUME 6: CONTINGENCY OPERATIONS, TOXIC CHEMICAL MUNITIONS AND AGENTS, AND RISK-BASED SITING

V6.1. INTRODUCTION. This volume provides criteria for contingency operations, toxic chemical munitions and agents, and risk-based siting.

VOLUME 6 – ENCLOSURE 1: REFERENCES

See References section at the end of the manual.

VOLUME 6 – ENCLOSURE 2: RESPONSIBILITIES

See Volume 1 – Enclosure 2.

VOLUME 6 – ENCLOSURE 3: EXPLOSIVES SAFETY AND MUNITIONS RISK MANAGEMENT (ESMRM) IN OPERATIONAL PLANNING, TRAINING, AND EXECUTION

V6.E3.1. PURPOSE. This enclosure complements Chairman of the Joint Chiefs of Staff Instruction (CJCSI) 4360.01A and provides ESMRM requirements for:

V6.E3.1. **(Added)(AF)** AF units will implement these procedures following CJCSI 4360.01B. **(T-0).**

V6.E3.1.1. Non-enduring locations (e.g., contingency bases) established or tasked to support joint or MN combat and contingency operations. Due to the hostile environment inherent to operations at COBs and contingency locations, the geographic Combatant Commander (GCC) must provide specific guidance on risk and consequence management from military munitions at these locations. Procedural requirements of CJCSI 4360.01A relating to ESMRM must be applied to COBs and contingency locations when the GCC determines it appropriate, given all operational and force protection considerations.

V6.E3.1.2. Aerial ports and seaports of embarkation and debarkation (APOE, APOD, SPOE, SPOD) and en route infrastructure support facilities (DoD and non-DoD controlled) that are used to support GCC operational and contingency plans.

V6.E3.1.3. Combat and contingency training.

V6.E3.1.4. United States Northern Command (NORTHCOM)/North American Aerospace Defense Command (NORAD) operations inside the United States.

V6.E3.2. APPLICABILITY

V6.E3.2.1. In addition to applicability of section **V6.E3.1.**, this enclosure also applies to:

V6.E3.2.1.1. DoD construction agents (e.g., USACE, Naval Facilities Engineering Command, and Air Force Civil Engineering Center), contract construction agents, and other designated DoD organizations (e.g., Defense Contract Management Agency, troop labor (Air Force Prime Beef, Naval Construction Battalions, J3 Engineers)) involved in construction, construction management, or contract award and management of construction related activities of AE-related facilities or facilities within QD arcs of AE facilities.

V6.E3.2.1.2. Combat training and contingency training, when specifically authorized by a Military Service or GCC.

V6.E3.2.2. This enclosure does not apply to:

V6.E3.2.2.1. Enduring (e.g., main operating bases) installations outside the United States and DoD installations within the United States. The Military Services must continue to use their established Military Service chain of command to address ESMRM-related requirements, as specified in other volumes of this manual, for enduring locations.

V6.E3.2.2.1. **(Added)(AF)** The Air Force will follow guidance specified in CJCSI 4360.01B for enduring locations outside the U.S. (i.e., the fifty states, the District of Columbia, and U.S. Territories). **(T-0).**

V6.E3.2.2.2. Training ranges under the control of the Services and where all explosion effects are contained within established surface danger zones.

V6.E3.2.2.3. Elements of a maneuvering force, engaged with the enemy or conducting movement to contact or movement to support operations, where risks and consequences will be addressed and managed by the appropriate commander, in accordance with operational mission requirements.

V6.E3.3. JOINT AND MN OPERATIONAL PLANNING

V6.E3.3.1. As outlined in Figure **V6.E3.F1.** and further expanded in CJCSI 4360.01A, GCC, functional CCDRs, and Service component commanders must:

V6.E3.3.1.1. Integrate ESMRM into joint operational planning and existing plans.

V6.E3.3.1.2. Integrate ESMRM requirements into MN operational planning and existing plans.

V6.E3.3.1.3. Validate in accordance with planning cycles joint and MN plans during planning exercises. When training exercises show the need to modify or update plans and supporting assumptions based on munitions risks, update and modify plans to incorporate validated changes.

V6.E3.3.2. As detailed in CJCSI 4360.01A, assess APOE, APOD, SPOE, SPOD, and en route infrastructure identified in the operational planning process.

Figure V6.E3.F1. CCDR ESMRM Process Flow

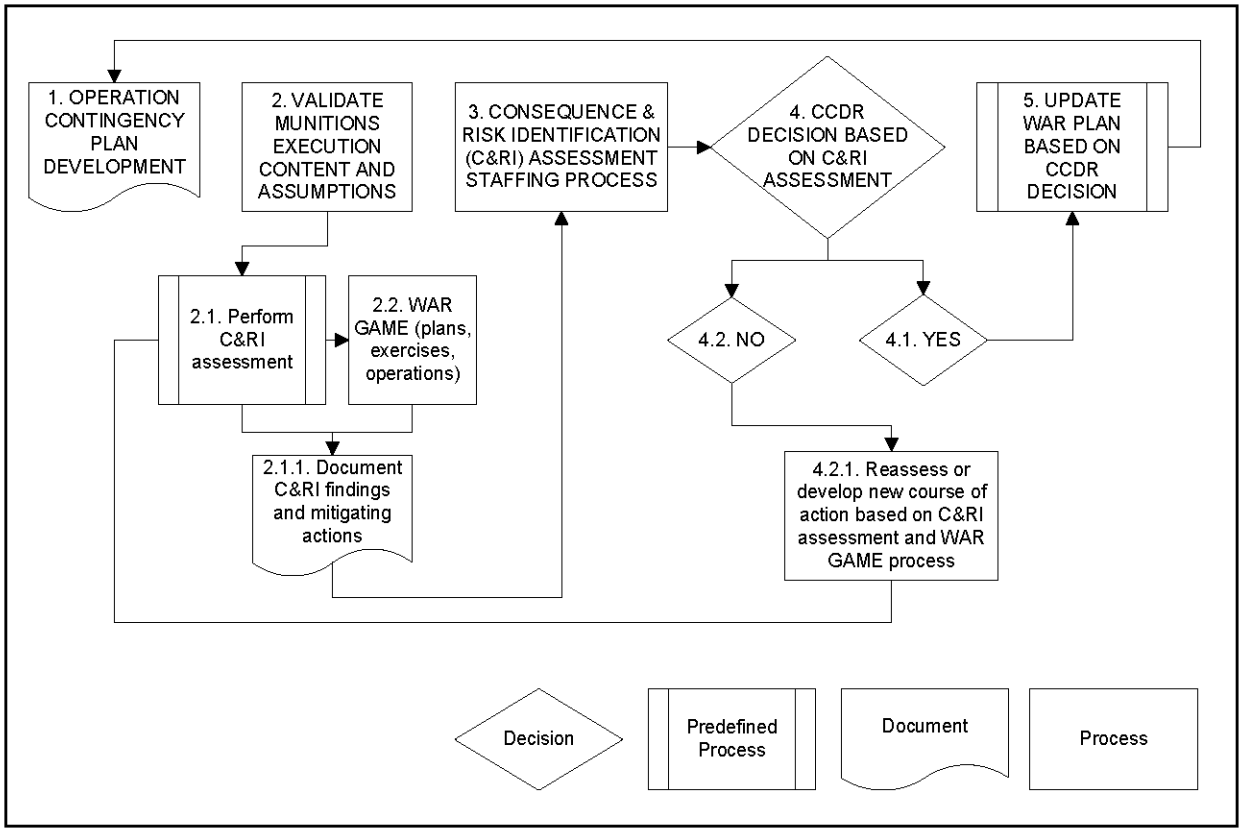

V6.E3.4. JOINT AND MN OPERATIONAL TRAINING. During the planning phase and before conducting this training, a risk analysis that thoroughly assesses the risk and consequences associated with the training must be conducted and approved as directed by CJCSI 4360.01A.

V6.E3.5. JOINT AND MN ESMRM EXECUTION

V6.E3.5.1. Role of the Base Operating Support Integrator (BOS-I). The BOS-I plays a critical role in the execution of explosives safety and ESMRM with regards to joint and MN installation master planning and real estate and infrastructure management. The following major areas must be addressed by the BOS-I:

V6.E3.5.1.1. Determine explosives safety requirements to be used.

V6.E3.5.1.2. Land and infrastructure use management.

V6.E3.5.1.3. ESQD mapping.

V6.E3.5.1.4. Explosives safety site planning.

V6.E3.5.1.5. Conduct of ESMRM consequence and risk identification (C&RI) assessments when explosives safety requirements cannot be met and ensuring approval at the appropriate level.

V6.E3.5.1.6. Risk and consequence management, to include communication of risk decisions.

V6.E3.5.1.7. Planning for risks and potential consequences from the unintended functioning of munitions, to include coordination of force protection and explosives safety mitigation.

V6.E3.5.1.8. All construction (see paragraph **V1.E5.2.1.** for criteria for when site plans are required) that increases hazards regardless of funding (e.g., Operations and Maintenance, Army (OMA), MILCON) must have either an explosives safety site plan or an approved deviation before construction begins. All construction within or on the periphery of ESQD arcs must be closely managed and should be coordinated, as early as possible in the planning and design phase, to ensure compliance with explosives safety requirements.

V6.E3.5.2. Approved Explosives Safety Site Plan or Deviation. All locations where military munitions are present or forecasted to be present must have an approved explosives safety site plan or an approved deviation. With respect to COBs and contingency locations, the GCC determines appropriate requirements as addressed in paragraph **V6.E3.1.1.**

V6.E3.5.2.1. For Locations That Can Meet Explosives Safety Requirements. The site approval process decision matrix is shown in Figure **V6.E3.F2.** Site plan packages will be prepared in accordance with **Volume 1 – Enclosure 5**. DoDI 6055.16 permits Service Components to submit hybrid safety submissions, which include approved deviations, to the DDESB for review and approval of the portions of the site plans that meet QD requirements.

V6.E3.5.2.2. For Locations That Cannot Meet Explosives Safety Requirements. Conduct an ESMRM C&RI assessment and obtain deviation approval from the appropriate authority, as detailed in CJCSI 4360.01A. The deviation process decision matrix is shown in Figure **V6.E3.F3.**

Figure V6.E3.F2. Explosives Safety Site Planning Process Decision Matrix (Locations That Can Meet Requirements)

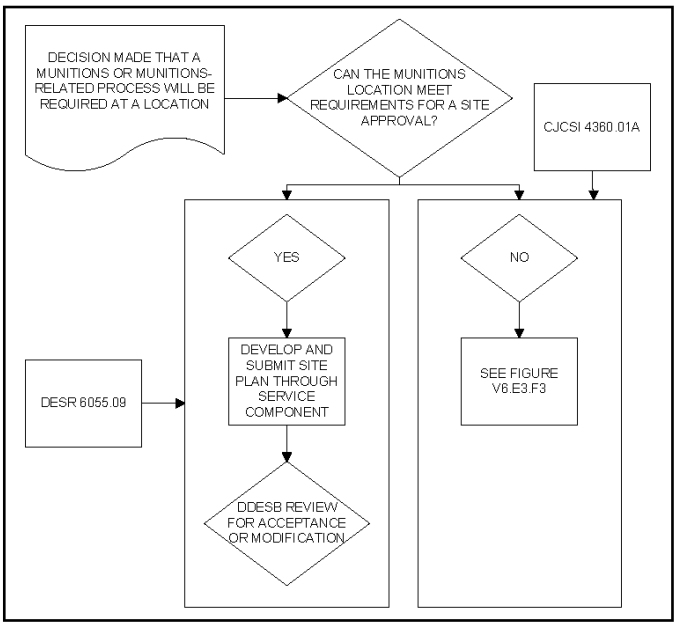

Figure V6.E3.F3. Explosives Safety Site Planning Process Decision Matrix (Locations That Cannot Meet Requirements)

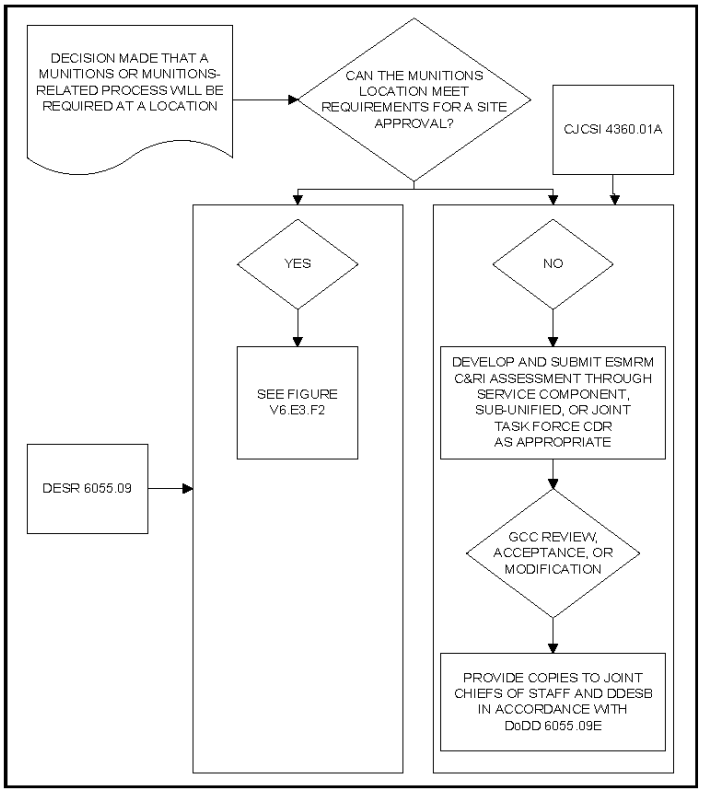

V6.E3.5.3. Locations That Will Be Considered for Explosives Safety Site Plan Approval. Examples of locations that will be considered for explosives safety site plan approval:

V6.E3.5.3.1. Storage locations (e.g., open location, pad, structure).

V6.E3.5.3.2. Holding areas (e.g., BLAHAs, AHAs, field return holding, flight-line holding areas, port and railhead holding areas, marshalling areas, and APOE, APOD, SPOE, SPOD, and en route infrastructure).

V6.E3.5.3.3. Handling and operating locations (e.g., combat, cargo and remotely piloted aircraft loading areas, ports, AE maintenance, repair, and renovation areas and sling-out areas, tenant operations).

V6.E3.5.3.4. Parking locations (even temporary) for vehicles carrying AE and located outside an established BLAHA or AHA.

V6.E3.5.3.5. Locations used for tactical assembly areas, AE field returns, amnesty returns, casualty AE collection (e.g., outside a hospital), and similar locations.

V6.E3.5.3.6. AE-loaded combat and cargo aircraft parking areas.

V6.E3.5.3.7. Static missile systems.

V6.E3.5.3.8. Locations used for the treatment or disposal (e.g., open burning (OB) or open detonation (OD)) of munitions.

V6.E3.5.3.9. Inhabited ESs within ESQD arcs.

V6.E3.5.3.10. Future or planned construction pertaining to AE locations, regardless of what they are used for, to include planned ESs that will be constructed within ESQD arcs.

V6.E3.5.4. Approval Process for MILCON That Cannot Meet Explosives Safety Requirements. In accordance with CJCSI 4360.01A, for consequence acceptance decisions that require MILCON, prior to construction start, the GCC will provide an endorsement to the appropriate Military Department Secretary for MILCON funding and project approval. Appendix A of CJCSI 4360.01A lists the information required as part of this endorsement.

V6.E3.6. SPECIFIC EXPLOSIVES SAFETY CRITERIA

V6.E3.6.1. Limited Quantities of HD 1.2.2, HD 1.3, or HD 1.4

V6.E3.6.1.1. For reasons of operational necessity, and in accordance with DoD Component-defined procedures, limited quantities of HD 1.2.2, HD 1.3, or HD 1.4 may be stored and used in operations without regard to QD and DoD explosives safety site approval, as

permitted by paragraph **V3.E3.2.11.** and applicable notes of Tables **V3.E3.T14.** and **V3.E3.T15.** (as addressed in paragraph **V1.E5.3.6.**).

V6.E3.6.1.2. DoD Components must specify explosives safety siting and documentation requirements. Service procedures should address items such as explosives limits, documentation requirements, fire safety, approval process, and LPS requirements.

V6.E3.6.1.3. Paragraphs **V6.E3.6.1.1.** and **V6.E3.6.1.2.** are applicable to armored vehicles located outside a BLAHA or AHA.

V6.E3.6.1.4. **(Added)(AF)** Licensed Explosives Storage Locations

V6.E3.6.1.4.1. **(Added)(AF)** Purpose of Licensed Explosives Storage Locations. Storage of small amounts of AE is sometimes required in facilities or locations that are not explosives sited IAW this manual. Such storage may be permitted in a licensed explosives storage location IAW the requirements of this section. Operations involving AE stored in explosives licensed locations and storage of AE not requiring licensing, or explosives siting, are also covered in this section. Operations that involve AE stored in explosives licensed locations and storage of AE that do not require licensing, or explosives siting, are also covered in this section.

V6.E3.6.1.4.1.1. **(Added)(AF)** Licenses do not apply to explosives operations other than those listed in this section.

V6.E3.6.1.4.1.2. **(Added)(AF)** Do not issue licenses for convenience.

V6.E3.6.1.4.1.3. **(Added)(AF)** The host weapons safety office issues licenses.

V6.E3.6.1.4.1.4. **(Added)(AF)** Except as specified in this section, QD requirements do not apply to licensed explosives storage locations.

V6.E3.6.1.4.1.5. **(Added)(AF)** Each explosives license requires locally written instructions. **(T-1).**

V6.E3.6.1.4.2. **(Added)(AF)** General Limitations on AE in Licensed Explosives Storage Locations.

V6.E3.6.1.4.2.1. **(Added)(AF)** Do not license CG A, K, and L. **(T-1).** Compatibility requirements specified elsewhere in this manual do not apply.

V6.E3.6.1.4.2.2. **(Added)(AF)** Do not store HD 1.2.1 and HD 1.2.3 in a licensed explosives location, except as allowed per paragraph **V6.E3.6.1.4.13.**

V6.E3.6.1.4.2.3. **(Added)(AF)** Do not store HD 1.1 in a licensed explosives location. **(T-1).**

V6.E3.6.1.4.3. **(Added)(AF)** NEWQD Limitations on AE in Licensed Explosives Storage Locations. Do not exceed the following quantities of AE, expressed as NEWQD, on any one license. **(T-1).**

V6.E3.6.1.4.3.1. **(Added)(AF)** MEQ of HD 1.4.

V6.E3.6.1.4.3.2. **(Added)(AF)** 100 lbs of HD 1.3.

V6.E3.6.1.4.3.3. **(Added)(AF)** 100 lbs of HD 1.2.2.

V6.E3.6.1.4.3.4. **(Added)(AF)** Turn in unserviceable explosive components or items to the base MSA as quickly as possible to preclude build-up of unserviceable NEWQD. **(T-1).** Count unserviceable NEWQD against the total NEWQD of the licensed facility. **(T-1).**

V6.E3.6.1.4.4. **(Added)(AF)** General Requirements for Licensed Explosives Storage Locations.

V6.E3.6.1.4.4.1. **(Added)(AF)** The structure or room used for storage must be capable of being locked to prevent pilferage and unauthorized handling. **(T-1).** Contact Security Forces for resource protection requirements. **(T-1).**

V6.E3.6.1.4.4.2. **(Added)(AF)** Post firefighting symbols IAW paragraph **V1.E10.3.2.3. (T-1).**

V6.E3.6.1.4.4.3. **(Added)(AF)** Provide dunnage for ventilation when required by civil engineering, logistics, or bioenvironmental directives. **(T-1).**

V6.E3.6.1.4.5. **(Added)(AF)** Separation Requirements for Licensed Explosives Storage Locations.

V6.E3.6.1.4.5.1. **(Added)(AF)** Explosives safety separation requirements do not apply to HD 1.4 AE stored in licensed explosives storage locations.

V6.E3.6.1.4.5.2. **(Added)(AF)** A minimum explosives safety separation of 25 feet is required from licensed explosives storage locations containing HD 1.3 AE to unrelated explosives operations, unrelated personnel, or other licensed explosives storage locations. **(T-1).** Where 25 feet cannot be obtained, a two-hour fire rated wall or two-hour fire rated cabinet is required. **(T-1).**

V6.E3.6.1.4.5.3. **(Added)(AF)** A minimum explosives safety separation of 100 feet is required from licensed explosives storage locations containing HD 1.2.2 AE to unrelated explosives operations, unrelated personnel, or other licensed explosives storage locations. **(T-1).** Where 100 feet cannot be maintained, a fragment barrier that provides protection equal to ¼-inch mild steel plate or one layer of sand bags (at least two sand bags higher than the stack of HD 1.2.2 stored) is required. **(T-1).** An SDW is an acceptable fragment barrier (see paragraph **V2.E5.4.8.** and DDESB TP 15).

V6.E3.6.1.4.5.4. **(Added)(AF)** Laboratory developed explosives per paragraph **V6.E3.6.1.4.21.**, will apply a minimum ESQD using **Volume 3 – Enclosure 3** guidance for HD 1.1 commensurate with the operation being performed (e.g., remote operations will use remote operation requirements for HD 1.1 and hands-on operations will use explosive operation requirements for HD 1.1.). **(T-1).**

V6.E3.6.1.4.5.5. **(Added)(AF)** IAW the general explosives safety requirement to separate explosives storage and operations, provide the maximum separation possible between a licensed explosives storage location and the operation and personnel it supports. **(T-1).** Comply with the requirements of paragraphs **V6.E3.6.1.4.5.2.** and **V6.E3.6.1.4.5.3.** to the maximum extent possible. **(T-1).**

V6.E3.6.1.4.5.6. **(Added)(AF)** Parking lots.

V6.E3.6.1.4.5.6.1. **(Added)(AF)** Locate POV, GOV, and powered AGE parking lots a minimum of 100 feet from a licensed location. **(T-1).** This minimum distance of 100 feet may be reduced to 50 feet if the PES is of non-combustible construction, a barrier sufficient to prevent the vehicle or powered AGE from rolling within 50 feet of the PES is located between the parking spaces and the PES.

V6.E3.6.1.4.5.6.2. **(Added)(AF)** Temporary parking of GOVs or powered AGE, other than those being loaded or unloaded, will not be closer than 25 feet to any licensed location. **(T-1).** Temporary means the length of time for which the presence of the vehicle or powered AGE is essential to completion of a single task (e.g., a single work order number).

V6.E3.6.1.4.5.6.3. **(Added)(AF)** Local fire and safety officials may reduce these parking requirements for each licensed location.

V6.E3.6.1.4.5.7. **(Added)(AF)** Fire protection distances for flammable and combustible materials found in other sections of this manual apply to licensed explosives locations. **(T-1).**

V6.E3.6.1.4.6. **(Added)(AF)** Maintaining the AF Form 2047.

V6.E3.6.1.4.6.1. **(Added)(AF)** Use AF Form 2047 to document approval for licensed explosives storage locations. Display the AF Form 2047 at the licensed explosives storage location. Update the AF Form 2047 each time the HD, NEWQD, CG, or quantity of AE items changes. **(T-1).**

V6.E3.6.1.4.6.2. **(Added)(AF)** When Munitions Operations issues suitable substitutions for stock listed items, updating the AF Form 2047 is not required as long as the HD, NEWQD, CG, and quantity of AE items does not change. Place an asterisk (*) next to the stock number listed in column "C" of the AF Form 2047 that is posted at the location and enter in the "Remarks" block, "*Suitable substitute authorized." When the FSC and DODIC, also known as the Department of Defense Ammunition Code (DODAC), is used the above asterisk is not required to identify a substitute.

V6.E3.6.1.4.6.3. **(Added)(AF)** Review the AF Form 2047 annually for continued requirement and applicability.

V6.E3.6.1.4.6.4. **(Added)(AF)** Cancel the AF Form 2047 when the requirement no longer exists.

V6.E3.6.1.4.7. **(Added)(AF)** Operations Involving AE Stored Licensed Explosives Storage Locations.

V6.E3.6.1.4.7.1. **(Added)(AF)** The unit or squadron commander (or equivalent) approves locally written instructions as the authorization for operations involving AE stored in a licensed explosives storage location (see section **V1.E6.12.**). **(T-1).** These instructions must be available for the operation. **(T-1).**

V6.E3.6.1.4.7.2. **(Added)(AF)** An ESP is not required for these operations as a PES.

V6.E3.6.1.4.7.3. **(Added)(AF)** Site these operations as an ES if located within the IBD of a PES.

V6.E3.6.1.4.7.4. **(Added)(AF)** Separation distances for these operations must meet the minimum distances specified in paragraph **V6.E3.6.1.4.5. (T-1).**

V6.E3.6.1.4.8. **(Added)(AF)** Mobility Storage. Store AE designated for mobility within the base MSA until ready for shipment. **(T-1).** Deploying units with extremely short timelines are exempt from this requirement. License the storage of pre-positioned mobility AE only if a properly sited area is not available. **(T-1).** The license is valid only for the duration of the mobility tasking. **(T-1).** At host units without a designated MSA, explosive items designated for mobility may be stored in a consolidated licensed location providing adherence to all paragraph **V6.E3.6.1.4.** provisions.

V6.E3.6.1.4.9. **(Added)(AF)** Training and Exercises. Licensing AE locations used solely for exercises, such as the ground burst simulators, smoke grenade storage, etc., is permitted. This license is valid only for the duration of the exercise.

V6.E3.6.1.4.10. **(Added)(AF)** Control Tower. If required, license the storage of necessary quantities of HD 1.3 pyrotechnics needed to conduct emergency operations at fixed and mobile control towers. Do not load pyrotechnic projectors and pistols unless the operational situation demands a state of immediate readiness. The same safety and security requirements that apply to firearms apply to projectors and pistols. Place in a proper rack, locker, box or compartment to prevent damage, unauthorized handling, theft or accidental discharge.

V6.E3.6.1.4.11. **(Added)(AF)** Aircrew Flight Equipment (AFE).

V6.E3.6.1.4.11.1. **(Added)(AF)** A license is not required for assembled parachutes, AFE kits, life rafts and life preservers containing authorized explosives when kept in personnel equipment rooms, life rafts, and aircrew flight equipment shops.

V6.E3.6.1.4.11.2. **(Added)(AF)** A license is required for those areas where AFE explosive components are stored. **(T-1).**

V6.E3.6.1.4.11.3. **(Added)(AF)** An operating instruction, approved by the commander, is required for all AFE shop operations involving explosive components (see section **V1.E6.12.**) **(T-1).**

V6.E3.6.1.4.12. **(Added)(AF)** Riot Control Items.

V6.E3.6.1.4.12.1. **(Added)(AF)** If required, store riot control and smoke grenades (except WP grenades) with small arms ammunition in arms rooms and other such locations. However, if the arms room is collocated with a facility where personnel are under physical restraint or confinement, then NFPA 101 applies.

V6.E3.6.1.4.12.2. **(Added)(AF)** Do not store 40 mm grenades, pyrotechnics, tear gas or chemical irritants in the room regardless of the QD division or compatibility, unless the arms room has protective features which completely protect detainees from the effects of accidental explosives activation.

V6.E3.6.1.4.12.2.1. **(Added)(AF)** Protective features include fragment barriers, blast doors, and exhaust fans.

V6.E3.6.1.4.12.2.2. **(Added)(AF)** Qualified engineers must evaluate capabilities of protective features. **(T-1).**

V6.E3.6.1.4.12.2.3. **(Added)(AF)** Limit the quantity to the smallest amount needed to support approved contingency plans.

V6.E3.6.1.4.13. **(Added)(AF)** Egress Systems Maintenance Shops. When necessary, units may license a limited quantity of in-use egress explosive components in the egress shop after removal from aircraft undergoing maintenance. Do not exceed the total number of complete sets for the number of aircraft in maintenance. **(T-1).** The following special provisions apply:

V6.E3.6.1.4.13.1. **(Added)(AF)** Store ejection seats, canopies, and explosives components not undergoing actual maintenance in a licensed storage location.

V6.E3.6.1.4.13.2. **(Added)(AF)** Within the egress maintenance work area, the NEWQD limitations in paragraph **V6.E3.6.1.4.3.** apply to the number of seats and spare components undergoing maintenance at any one time.

V6.E3.6.1.4.14. **(Added)(AF)** Gun Systems and Maintenance Shops. When possible, remove ammunition from guns and gun systems before they are brought into a weapons maintenance facility for repair. Gun systems using drums do not require removal of ammunition if the feed system is mechanically safed to prevent ammunition from feeding into the gun. QD

requirements do not apply to gun system maintenance operations when explosives are limited to HD 1.4 and 100 pounds of HD 1.2.2 provided the using organizations ensure:

V6.E3.6.1.4.14.1. **(Added)(AF)** MAJCOMs will establish procedures for clearing jammed guns. Consider both active and contingency bases.

V6.E3.6.1.4.14.2. **(Added)(AF)** Do not bring guns or gun systems loaded with ammunition into the maintenance facility until needed to meet the work schedule and remove immediately after repair.

V6.E3.6.1.4.14.3. **(Added)(AF)** Precautions are established to prevent inadvertent firing.

V6.E3.6.1.4.14.4. **(Added)(AF)** Gun systems with live ammunition are grounded.

V6.E3.6.1.4.14.5. **(Added)(AF)** Gun system is pointed in the least hazardous direction.

V6.E3.6.1.4.14.6. **(Added)(AF)** Downloaded ammunition is removed from the building and returned to the base MSA as soon as possible.

V6.E3.6.1.4.14.7. **(Added)(AF)** Compliance with general explosives safety standards.

V6.E3.6.1.4.15. **(Added)(AF)** Incendiary Equipment and Document Destroyers. If necessary, store these items near the planned point of use to comply with emergency destruction plans.

V6.E3.6.1.4.15.1. **(Added)(AF)** Establish quantities for each location by coordinating with base explosives safety and security representatives. The 100-pound HD 1.3 limit does not apply in this case.

V6.E3.6.1.4.15.2. **(Added)(AF)** Limit quantity to the amount needed for emergency destruction plans. **(T-1).**

V6.E3.6.1.4.15.3. **(Added)(AF)** Training quantities are not authorized. **(T-1).**

V6.E3.6.1.4.15.4. **(Added)(AF)** Construct or protect storage rooms with noncombustible or fire-resistive material. **(T-1).** If possible store in nearby small low-cost structures (sheds, conex, etc.). Ensure adequate ventilation is provided.

V6.E3.6.1.4.15.5. **(Added)(AF)** Maintain 50-foot firebreaks or vegetation control zones and locate at least 75 feet from any other building. **(T-1).**

V6.E3.6.1.4.15.6. **(Added)(AF)** Store replacement stocks in the base explosives storage area. **(T-1).**

V6.E3.6.1.4.15.6. **(Added)(AF)** Only trained personnel are allowed to prepare and activate these devices. **(T-1).**

V6.E3.6.1.4.16. **(Added)(AF)** Rod and Gun Clubs. License the explosives storage locations for clubs that hand-load ammunition on Air Force property. **(T-1).** For skeet and trap ranges adhere to criteria established by the National Skeet Shooting Association. See also paragraphs **V6.E3.6.1.4.17.** and **V6.E3.6.1.4.18.** Designate a qualified member to identify and enforce criteria.

V6.E3.6.1.4.17. **(Added)(AF)** Retail Stores. Where only retail sales are made, paragraph **V6.E3.6.1.4.23.** applies. Do not complete a license unless the store sells primers and smokeless powder. **(T-1).** More than 100 lbs of propellant and 25,000 primers, packed in their shipping containers, may be licensed if they are segregated in such a way that the MCE does not exceed 100 lbs of propellant and 25,000 primers, i.e., if IM separation is met. Do not place HD **1.3** propellant in other containers if it would result in extreme confinement in the event of ignition. **(T-1).** Use fire symbol 3 to designate the presence of both the propellant and primers. **(T-1).** Keep the symbol posted during temporary periods when the propellant has been sold out, but primers are still in stock. **(T-1).**

V6.E3.6.1.4.18. **(Added)(AF)** Hand Loading. MAJCOMs will provide guidance for units that conduct hand loading on AF installations.

V6.E3.6.1.4.19**. (Added)(AF)** FSS Activities. FSS activities such as aero clubs and boating activities are sometimes required to maintain and store commercial pyrotechnic signals. Control and store these items using the same criteria as the military item they resemble. Ensure personnel are properly trained. License the storage locations. Technical data or manufacturer's data are sources for locally-written procedures.

V6.E3.6.1.4.20. **(Added)(AF)** Minuteman Handling Team (MHT) Facility. The TE tractor or autocar with missile in tow may require temporary storage in the MHT facility. When using this procedure, comply with the following conditions:

V6.E3.6.1.4.20.1. **(Added)(AF)** Storage is essential to meet operating requirements.

V6.E3.6.1.4.20.2. **(Added)(AF)** Vehicle is chocked and grounded.

V6.E3.6.1.4.20.3. **(Added)(AF)** Vehicle safety inspection is performed and no safety deficiencies exist.

V6.E3.6.1.4.21. **(Added)(AF)** R&D Laboratories for Specific Experiments. When necessary, units may license a limited quantity, not to exceed 200 grams in each licensed location, of material for research use in laboratories. Licensing explosives used solely for a

research project is allowed only for the length of the project. Commander-approved, locally-written procedures are required for the explosives operation (see paragraph **V6.E3.6.1.4.7.**). **(T-1).**

V6.E3.6.1.4.22. **(Added)(AF)** Base Defense Support Munitions for Dispersed Locations. When required for defense against hostile forces, pre-position-installation defense explosives stocks in licensed temporary magazines. Store and protect licensed facilities and stocks as stated below:

V6.E3.6.1.4.22.1. **(Added)(AF)** If necessary, omit fire and hazard symbols to avoid attention of hostile forces. Post "No Smoking" signs and keep the fire department informed of each facility's location and type of explosives.

V6.E3.6.1.4.22.2. **(Added)(AF)** Follow the instructions in paragraphs **V6.E3.6.1.4.4.** and **V6.E3.6.1.4.5.** if the facility is stocked with HD 1.2, 1.3, 1.4, and riot control items.

V6.E3.6.1.4.22.3. **(Added)(AF)** Submit ESPs for HD 1.1 items.

V6.E3.6.1.4.23. **(Added)(AF)** Items or Situations not Requiring a License.

V6.E3.6.1.4.23.1. **(Added)(AF)** Licenses are not required for the storage of small arms ammunition (.50 caliber or less), commercial maritime distress signals and like items held by base exchanges and individuals in family housing.

V6.E3.6.1.4.23.2. **(Added)(AF)** Locations storing less than 1,000 rounds of HD 1.4 small arms ammunition (to include privately-owned ammunition seized or confiscated for evidence), cartridges for EOD cartridge-actuated tools, up to 5,000 feet of shock tube, locations storing any quantity of thermal batteries, locations storing any quantity of cartridge-type explosives for powder-actuated hand tools meeting the requirements in AFMAN 91-203, and F/A-22 assembled pylons in storage.

V6.E3.6.1.4.23.3. **(Added)(AF)** The exception for quantities less than 1,000 rounds of HD 1.4 does not apply to the on-installation storage of bird scare ammunition, privately owned ammunition belonging to dormitory and billeting residents, or approved commercial off-the-shelf explosives, except as noted in this manual. Always store this ammunition in approved, licensed explosives storage locations, regardless of quantity.

V6.E3.6.2. QD Reduction Using Concertainer Barricades

V6.E3.6.2.1. Fill material for concertainer barricades must be reasonably cohesive and free from harmful (toxic) matter, trash, debris, and stones heavier than ten pounds. Stones should be located at the lower center of the barricade. The preferred fill material is a granular material, such as sandy soil.

V6.E3.6.2.2. Inspect these types of barricades periodically to ensure their integrity and stability. Replace deteriorating or damaged sections.

V6.E3.6.2.3. DDESB has approved the use of a concertainer barricade design for prevention of prompt propagation between munitions storage cells, each containing up to 8,818 lbs [4,000 kg] NEW of AE, with a reduced IMD of 28 ft [8.53 m] versus the required default IMD (K-factor (English system) (K6) [K-factor (metric system) (K_m) 2.38]) criteria of 126 ft [37.8 m]. The following apply to this approval:

V6.E3.6.2.3.1. Each storage cell is restricted to a maximum of 8,818 lbs [4,000 kg] NEW of mixed HD 1.1 and HD 1.2 (SGs 1 through 5), HD 1.3, and HD 1.4 AE. The MCE associated with any storage arrangement constructed in accordance with the Technical Data Package for Ammunition Storage Quantity-Distance Reduction with Concertainer Barricades is one storage cell. When determining NEWQD for the cell, HD 1.4 may be excluded, as it will not contribute to the severity of an explosion were one to occur.

V6.E3.6.2.3.2. The "Open" column of Table **V3.E3.T2.** is used for determining appropriate QD for the NEWQD that is present, when in the open or in a structure that cannot stop primary fragments. If in a hardened structure that is capable of stopping primary fragments, use the "Structure" column of Table **V3.E3.T2.** Refer to paragraph **V3.E3.1.2.1.1.1.** for additional details.

V6.E3.6.2.3.3. A minimum of 10-ft [3.1-m] standoff must be maintained from the munition stack to the nearest concertainer barricade.

V6.E3.6.2.3.4. The barricade height and length must be in accordance with paragraph **V2.E5.4.2.**

V6.E3.6.2.4. NATO concertainer barricade criteria:

V6.E3.6.2.4.1. NATO Allied Ammunition Storage and Transport Publication (AASTP-5) provides criteria for AE storage of up to 8,818 lbs [4,000 kg] of AE in barricaded cells, with reduced QD. Those criteria provide QD for ESs outside the camp or base. In addition, the criteria provide appropriate QD for the protection of personnel and ESs inside the camp or base, from PES fragments, debris, and blast, as well as ES building collapse, in consideration of PES and ES designs (i.e., open, light, semi-hardened, hardened).

V6.E3.6.2.4.2. Paragraph **V6.E3.8.3.** addresses the use of NATO criteria by U.S. forces participating in NATO MN operations. NATO AASTP-5 criteria can also be used by U.S. forces outside of NATO MN operations, as allowed by DoD Components.

V6.E3.6.3. Fuel Storage. Certain operations may require large amounts of on-site, operational fuel quantities. Operational fuel needs must be limited to the mission essential quantity only. The basis for arriving at the mission essential quantity will be documented and approved by the installation commander. However, in almost all other cases, the following operational fuel limits and separation distances will meet the operational fuel needs and must be applied:

V6.E3.6.3.1. Quantities up to 500 gallons [1,893 liters] must be separated from PESs by at least 50 ft [15.24 m].

V6.E3.6.3.2. Quantities between 500 to 5,000 gallons [1,893 to 18,927 liters] must be separated from PESs by at least 100 ft [30.5 m].

V6.E3.6.3.3. For bulk storage (i.e., greater than 5,000 gallons [18,927 liters]), apply section **V4.E5.13.**

V6.E3.6.3.4. For further protection from an accidental explosion at a PES and to provide fire protection to surrounding PESs and ESs, fuel storage locations should be barricaded. If designed properly, the barricade will also serve as a dike in the event of a fuel leak. Fueling trucks or tankers, when not being used, should be separated from PESs by barricades as well.

V6.E3.6.4. Emergency Destruction. DoD Components must develop specific guidance for implementing and training for emergency destruction of munitions. Normal disposal operations must be conducted in accordance with **Volume 5 – Enclosure 3**.

V6.E3.6.5. Captured Enemy Ammunition (CEA)

V6.E3.6.5.1. CEA is stored at a minimum of IMD, but preferably IBD, from all other AE stocks. It must not be co-located (i.e., same cell) with DoD AE.

V6.E3.6.5.2. CEA collected for exploitation is managed in accordance with DoDD S-3325.01 and DoDI S-3325.04.

V6.E3.6.6. Mixing of DoD AE with MN AE. It must not be assumed that MN AE is hazard classified in accordance with the UN international system of classification developed for the transport of dangerous goods (UN Publication ST/SG/AC.10/1), which is the basis for U.S. hazard classification, as outlined in section **V1.E6.1.** It must also not be assumed that MN nations conduct or manage AE surveillance or propellant stability test programs to ensure the safety of their AE items. For these reasons, unless it is specifically known that MN nations have such programs and that they are actively managed and monitored, then AE from these nations must not be stored with DoD AE. The following apply to mixing of DoD AE with MN AE:

V6.E3.6.6.1. MN AE may be stored at the same site (e.g., building, pad) with DoD AE provided the owner(s) of the DoD AE accepts the risk and consequences of storing non-DoD ammunition with DoD ammunition and the involved nation(s)' AE:

V6.E3.6.6.1.1. Has been hazard classified in a manner equivalent to DoD explosives hazard classification procedures as outlined in section **V1.E6.1.**

V6.E3.6.6.1.2. Is managed and monitored as part of both AE surveillance and propellant stability test programs.

V6.E3.6.6.1.3. Is packaged and stored in a manner that meets DoD standards.

V6.E3.6.6.2. MN AE that do not meet all requirements of paragraph **V6.E3.6.6.1.** will be separated from DoD AE by a minimum of IMD.

V6.E3.6.7. Concurrent DoD and MN AE Operations. The following criteria govern such operations:

V6.E3.6.7.1. Concurrent DoD and MN AE operations (e.g., ammunition issues, returns, inspections) will be separated by a minimum of ILD.

V6.E3.6.7.2. Non-concurrent DoD and MN AE operations may be performed on the same pad, site, or facility provided the AE of the first party is removed prior to the second party beginning AE operations.

V6.E3.6.7.3. AE operations (DoD or MN) at risk from AE storage sites (DoD or MN) will be given ILD level of protection from that storage site.

V6.E3.6.7.4. AE storage sites (DoD or MN) at risk from AE operations (DoD or MN) will be given IMD level of protection from that AE operation.

V6.E3.7. DDESB TECHNICAL PAPER 15. DDESB Technical Paper 15 consolidates into one document the protective construction approved by the DDESB. It describes past solutions that were developed to address specific problems being experienced by DoD Components, particularly to reducing the MCE and associated QD criteria. Appendix 2 of DDESB Technical Paper 15 was written specifically to incorporate all items that could benefit the operational theater in the areas of storage and operations.

V6.E3.8. APPLICATION OF OTHER THAN DoD EXPLOSIVES SAFETY REQUIREMENTS. DoD policy and Joint Chiefs of Staff guidance with respect to the application of other explosives safety criteria is as follows:

V6.E3.8.1. As required by paragraph **V6.3.2.,** when outside the United States, comply with host-nation, MN, or U.S. explosives safety standards, whichever are more stringent unless standards applicability is mandated in an IA.

V6.E3.8.2. JP 3-16 advises commanders of U.S. forces operating as part of a MN (alliance or coalition) military command that they should follow MN doctrine and procedures ratified by the United States. For doctrine and procedures not ratified by the United States, commanders should evaluate and follow the MN command's doctrine and procedures, where applicable and consistent with U.S. law, regulations, and doctrine.

V6.E3.8.3. The following applies to the use of NATO criteria:

V6.E3.8.3.1. NATO explosives safety requirements are found in NATO AASTP-5 and AASTP-1, both of which are covered by Standardization Agreements ratified by the United States for use by U.S. forces during NATO MN operations.

V6.E3.8.3.2. NATO requirements may be mandated for use in an IA or as part of a MN operation.

V6.E3.8.3.3. DDESB will accept explosives safety site plans based on the QD contained in NATO AASTP-5 and AASTP-1 and developed by U.S. forces participating in NATO MN operations.

V6.E3.8.4. The following applies to the use of UN International Ammunition Technical Guidelines (IATG):

V6.E3.8.4.1. The UN has developed explosives safety technical guidance referred to as the IATG. UN requirements may be mandated for use in an IA or as part of a UN MN operation.

V6.E3.8.4.2. IATG QD requirements are similar to NATO QD requirements of NATO AASTP-1.

V6.E3.8.4.3. DoD and Services' explosives safety programs fully meet the highest level of compliance (Level 3) described in the IATG.

VOLUME 6 – ENCLOSURE 4: TOXIC CHEMICAL MUNITIONS AND AGENTS

V6.E4.1. SCOPE AND APPLICATION

V6.E4.1.1. This enclosure sets forth standards for protecting workers and the general public from the harmful effects of toxic chemical munitions and agents associated with research, testing, training, preservation and maintenance operations, storage, and demilitarization at laboratories, manufacturing plants, and depots as well as other DoD Component agent operations, exclusive of combat training and operations. They apply to:

V6.E4.1.1.1. Blister Agents. Examples include, but are not limited to:

V6.E4.1.1.1.1. H/HD – 2,2' dichlorodiethyl sulfide (common name is distilled mustard).

V6.E4.1.1.1.2. H/HT – 60-percent HD and 40-percent 2,2' dichloroethylthiodiethyl ether (common name is mustard-T mixture).

V6.E4.1.1.1.3. L – dichloro (2-chlorovinyl) arsine (common name is lewisite).

V6.E4.1.1.2. Nerve Agents. Examples include, but are not limited to:

V6.E4.1.1.2.1. GB – isopropyl methylphosphonofluoridate (common name is sarin).

V6.E4.1.1.2.2. GA – dimethylaminoethoxy-cyanophosphine oxide (common name is tabun).

V6.E4.1.1.2.3. VX – 0-ethyl S-[2-(diisopropylamino) ethyl] methylphosphonothioate.

V6.E4.1.1.2.4. GD – pinacolyl methylphosphonofluoridate (common name is soman).

V6.E4.1.1.2.5. Mixtures of these agents.

V6.E4.1.2. Toxic chemical munitions may present additional hazards of blast, fragments, and thermal effects. Standards relating to these explosives hazards are addressed in other enclosures of this volume, as well as other volumes of this manual.

V6.E4.1.3. This manual does not apply to the immediate disposal of toxic chemical munitions or decontamination of toxic CAs during an emergency when the delay will cause a greater danger to human life or health.

V6.E4.1.4. The DoD Components are responsible for developing implementing instructions and safety procedures for logistical movements, training, and field operations.

V6.E4.1.5. The requirements of MIL-STD-882E must be followed.

V6.E4.2. SITING CRITERIA

V6.E4.2.1. Hazard Distance Calculations. (See the definition of "public exclusion distance" in the Glossary). Hazard distance calculations must conform to DDESB Technical Paper 10. DDESB approved software (e.g., as provided in U.S. Army Chemical Research, Development and Engineering Center publication) that implements the methodology of DDESB Technical Paper 10 may be used to perform these calculations. The calculated hazard distance is based on the greater of the MCE or the toxic CA MCE and is bounded by the one percent lethality arc for a toxic CA source containing a dose of more than:

V6.E4.2.1.1. 10.0 milligram-minute(mg-min)/cubic meter (m^3) of GB.

V6.E4.2.1.2. 4.3 mg-min/m^3 of VX.

V6.E4.2.1.3. 150.0 mg-min/m^3 of mustards.

V6.E4.2.1.4. 0.1 milligram (mg) for inhalation-deposition of VX.

V6.E4.2.2. Personnel Control. Take positive means to ensure unprotected personnel do not enter hazard zones and include written procedures that are reviewed and updated, as necessary. However, positive control of an area, which ensures personnel can evacuate or be protected before exposure in the case of an accident, may be developed instead of absolute exclusion. Include details of such control procedures in the site and general construction plans.

V6.E4.3. WORKPLACE AIRBORNE EXPOSURE LIMIT (AEL). The Army Surgeon General establishes the maximum permissible concentrations (AELs) listed in Table **V6.E4.T1.** AELs are time-weighted averages (TWAs) or ceiling values that define the permissible limits of exposure for unprotected personnel.

Table V6.E4.T1. AELs

Exposure Limit	CA (mg/m^3)				
	GD	GA/GB	VX	H/HD & H/HT	L[a]
Unmasked Agent Worker					
8-hour TWA in any work shift	3×10^{-5}	1×10^{-4}	1×10^{-5}	3×10^{-3} (Footnote b)	3×10^{-3} (Footnote b)
Non-Agent Worker and General Population					
72-hour TWA	3×10^{-6}	3×10^{-6}	3×10^{-6}	1×10^{-4} (Footnote c)	3×10^{-3} (Footnote b)
Ceiling Value[d]	3×10^{-5}	1×10^{-4}	1×10^{-5}	3×10^{-3} (Footnote b)	3×10^{-3} (Footnote b)
Source Emission Limit					
1-hour TWA	1×10^{-4}	3×10^{-4}	3×10^{-4}	3×10^{-2}	3×10^{-2}

a	All concentrations measured as lewisite.
b	This value also represents the technologically feasible real-time detection limit. HT is measured as HD.
c	It is recommended that this level of detection (using a 12-hour sampling time) be demonstrated and used at all sites where mustard is transported and destroyed.
d	The concentration of CA that may not be exceeded for any period of time. Practically, it may be an average value over the minimum time to detect the specified concentration.

V6.E4.4. TOXIC CA HAZARD ANALYSES, MEASUREMENTS, AND EXPOSURE CONTROLS

V6.E4.4.1. Hazard Analyses

V6.E4.4.1.1. Conduct hazard analyses for all new operations involving toxic CAs or when there is a change in existing production, process, or control measures that may result in an increase in airborne or contact concentrations of toxic CAs. Retain hazard analyses for 40 years.

V6.E4.4.1.2. If hazard analyses indicate that an operation may expose personnel to toxic CAs above the AEL, institute control measures and establish procedures to measure the actual exposure.

V6.E4.4.2. Measurements

V6.E4.4.2.1. Devices for sampling and analyzing workplace air must measure and alarm within 10 minutes when toxic CAs are present in excess of the 8-hour TWA concentrations.

V6.E4.4.2.2. When the interior of reservoirs, pipes, and such systems are sampled, record the volume of the item or system being sampled as well as the volume of the sample associated with the measured concentrations.

V6.E4.4.2.3. Do not analyze decontaminating solutions for residual toxic CA to certify a level of decontamination. Suspected toxic CAs must be extracted from samples with suitable solvents where analyses are required. Air may be an appropriate solvent for volatile agents.

V6.E4.4.3. Exposure Control

V6.E4.4.3.1. When exhaust systems are used to control exposure, make measurements of system effectiveness such as static pressure at the start of each operation and at least every 3 months.

V6.E4.4.3.2. Before beginning toxic CA operations, the hazard zone associated with those operations must be under positive control in accordance with paragraph **V6.E4.2.2.**

V6.E4.4.3.3. If personnel exposures will equal or exceed the applicable AEL, protect personnel with personal protective equipment (PPE) specifically approved by the Army Surgeon General or as indicated in Table **V6.E4.T2.**

V6.E4.4.3.4. Develop procedures to address hazards involved in maintenance and repair operations.

V6.E4.5. MEDICAL SURVEILLANCE. Before being assigned to toxic CA duties, provide health assessments for each employee to establish a baseline health record. Use annual assessments thereafter to determine deviations from the baseline.

V6.E4.6. WORKER PPE

V6.E4.6.1. Incorporate positive engineering and administrative controls in all operations involving toxic CAs to preclude or minimize the need for PPE.

V6.E4.6.2. Establish a respiratory protection program in conformance with DoDI 6055.1 and DoDI 6055.05 for approved respiratory requirements. The wearer's face must be clean-shaven to the extent that there is no interference of any facial hair growth with the sealing surfaces of the protective mask. Personnel with beards must be denied access to agent storage and operating areas unless suitable emergency egress respirator(s) can be provided.

V6.E4.6.3. Personnel must use PPE recommended by the hazard analysis. (See Table **V6.E4.T2.** for PPE requirements based on the occupational scenario.)

Table V6.E4.T2. PPE[a] and Employee Exposure Potential[b]

Occupational Scenario	Toxic CAs (mg/m^3)				
	GD	GA/GB	VX	H/HD & H/HT	L
1. Unmasked agent worker					
A full-facepiece, chemical canister, air-purifying protective mask will be on hand for escape. (The M9, M17, or M40 series masks are acceptable for this purpose. Other masks certified as equivalent may be used.)[c]	3×10^{-5} (Footnote d)	1×10^{-4} (Footnote d)	1×10^{-5} (Footnote d)	3×10^{-3} (Footnote e)	3×10^{-3} (Footnote e)
2. Masked personnel in routine operations					
a. A National Institute of Occupational Safety and Health (NIOSH)-approved pressure demand full facepiece SCBA or supplied air respirator with escape air cylinder may be used. b. Alternatively, a full-facepiece, chemical canister, air-purifying protective mask is acceptable for this purpose (i.e., M9, M17, or M40 series or other certified equivalent).[c]	$> 3 \times 10^{-5}$ to 6×10^{-2}	$> 1 \times 10^{-4}$ to 2×10^{-1}	$> 1 \times 10^{-5}$ to 2×10^{-2}	3×10^{-3}	3×10^{-3}
3. Personnel conducting emergency operations or operations in unknown but potentially high agent concentrations					
a. NIOSH-approved pressure demand full-facepiece SCBA with protective ensemble.[f, g] b. During emergencies, the best available respiratory protection and personnel ensemble will be used. If protection in 3a is not available, use of a full-facepiece, chemical canister, air-purifying protective mask with hood is acceptable. Only the M9 or M40 series masks are acceptable.[f, g]	$> 6 \times 10^{-2}$	$> 2 \times 10^{-1}$	$> 2 \times 10^{-2}$	$> 3 \times 10^{-3}$ (Footnote h)	$> 3 \times 10^{-3}$ (Footnote h)

Table V6.E4.T2. PPE[a] and Employee Exposure Potential,[b] Continued

a	Qualitatively fit all workers required to use respiratory protective devices. Quantitative fit testing may be performed using surrogate masks.
b	Employee exposure potential is based on an 8-hour TWA measurement. All values in this table are 8-hour TWAs unless otherwise noted. The TWA is the concentration to which workers may be repeatedly exposed, for a normal 8-hour workday and 40-hour workweek, day after day, without adverse effects. TWAs permit excursions above the limit provided they are compensated by equivalent excursions below the limit during the workday. Excursions above the TWA should be controlled even where the 8-hour TWA is within recommended limits.
c	Air-purifying masks may not be used in oxygen deficient atmospheres.
d	Determined by required continuous air monitoring.
e	This represents ceiling value determined by continuous real time monitoring (with alarm) at the 0.003-mg/m^3 level of detection. Respiratory protection must be immediately available in case concentration rises above 0.003 mg/m^3. Engineering and work practice controls must be used to limit employee exposure potential to the extent practical.
f	Examples of such protective ensembles include toxicologic agent protective ensemble, self-contained and the demilitarization protective ensemble.
g	For emergency masked escape, a full-facepiece, chemical canister, air-purifying protective mask (DoD Component-certified masks) is acceptable.
h	Because agents H and L are potential carcinogens, the highest level of respiratory and dermal protection must be provided to all workers exposed. An air-purifying protective mask is not suitable for this purpose.

V6.E4.7. ADMINISTRATIVE AND WORK PRACTICE CONTROLS

V6.E4.7.1. Containment

V6.E4.7.1.1. Containment is the principal control measure for prevention of exposure of personnel to toxic CAs.

V6.E4.7.1.1.1. Total containment is required for those operations involving toxic chemical munitions that contain explosive components when the operation may subject the explosives components to a potential initiating stimulus. Total containment requires the equipment or facility to be a DDESB-approved design capable of containing all the reaction gases, detectable toxic CAs, and fragments from the largest explosion or detonation that could occur without causing equipment or facility rupture or leakage. Operations requiring total containment include, but are not limited to:

V6.E4.7.1.1.1.1. Toxic chemical munition cutting, sawing, milling, drilling, punching, or shearing operations that require the machine tool to remove or displace metal before or after contact with the explosives.

V6.E4.7.1.1.1.2. Operations in which the toxic chemical munitions arming and functioning environments can be duplicated by the equipment or process.

V6.E4.7.1.1.1.3. Disassembly of armed or possibly armed toxic chemical munitions.

V6.E4.7.1.1.1.4. Disassembly of explosive components from toxic chemical munitions that requires application of significantly greater leverage or torque than that required for assembly.

V6.E4.7.1.1.2. Vapor containment is required for those operations involving toxic CAs without explosives components and for those operations involving toxic chemical munitions containing explosive components that do not subject the explosive components to a potential initiating stimulus. Vapor containment requires the equipment or facility to be a DDESB-approved design capable of containing non-explosion releases of toxic CAs. Operations requiring vapor containment include, but are not limited to:

V6.E4.7.1.1.2.1. Toxic chemical munitions punching, drilling, or sawing operations for removal of toxic CAs.

V6.E4.7.1.1.2.2. Burster-well removal.

V6.E4.7.1.1.2.3. Transfer of toxic CAs from bulk storage tanks, containers, or toxic chemical munitions into holding tanks, chemical detoxification reactors, incinerators, or similar processing equipment (e.g., may be found in a production, demilitarization, or disposal line).

V6.E4.7.1.1.2.4. Research, development, test, and evaluation chamber operations.

V6.E4.7.1.2. Containment is not required for operations associated with field storage and maintenance activities (e.g., shipping, storage, receiving, re-warehousing, minor maintenance, surveillance inspection, repair, and encapsulation).

V6.E4.7.2. Training and Information. Anyone who works with toxic chemical munitions and agents (e.g., agent workers, firefighters, and medical and security personnel) must receive training to enable them to work safely and to understand the significance of toxic CA exposures. This training must include, but is not limited to, information on sources of exposure, adverse health effects, practices and controls used to limit exposures, environmental issues, medical monitoring procedures, and employee responsibilities in health protection programs.

V6.E4.7.3. Recordkeeping. Keep records pertaining to exposure determination and measurement, mechanical ventilation, employee training, medical surveillance, and access to records consistent with DoDI 6055.05.

V6.E4.7.4. Labeling and Posting of Hazards

V6.E4.7.4.1. Signs and labels to warn personnel of hazards of toxic CAs are required for:

V6.E4.7.4.1.1. Work areas.

V6.E4.7.4.1.2. Contaminated clothing and equipment.

V6.E4.7.4.1.3. Identification of restricted-use areas.

V6.E4.7.4.2. When items or materials are contaminated or suspected of being contaminated with toxic CAs, they must be marked as follows:

V6.E4.7.4.2.1. The applicable supplemental chemical hazard symbol (see Figure **V1.E10.F4.**) with "XXXXX" indicates that the items or materials have been completely decontaminated and may be released for general use or sold to the general public. Items or materials are completely decontaminated when they have been subjected to procedures that are known to completely degrade the toxic CA molecule, or when analyses, approved by the DDESB, have shown that the total quantity of toxic CA is less than the minimal health effects dosage as determined by the Office of the Surgeon General of the Army.

V6.E4.7.4.2.2. The applicable supplemental chemical hazard symbol (see Figure **V1.E10.F4.**) with "XXX" indicates that the items or materials have been decontaminated. Tests or monitoring must be conducted in accordance with the DoD Component requirements to verify that concentrations do not exceed the AEL for an unmasked agent worker in Table **V6.E4.T1.**

V6.E4.7.4.2.3. The applicable supplemental chemical hazard symbol (see Figure **V1.E10.F4.**) with a single "X" indicates the items or materials have been partially decontaminated of the indicated toxic CA. Further decontamination processes are required before the item is moved or any maintenance or repair is performed without the use of PPE.

V6.E4.7.4.3. When facilities or rooms are contaminated or suspected of being contaminated with toxic CAs, they must be marked as follows (excluding magazines that use the supplemental chemical hazard symbols shown in Figure **V1.E10.F4.**):

V6.E4.7.4.3.1. 5R – No Agent Hazard. A supplemental chemical hazard symbol (see Figure **V1.E10.F4.**) with "RRRRR" indicates that all previously contaminated surfaces are decontaminated and analyzed to demonstrate the absence of residual toxic CAs, and air sampling indicates toxic CA vapor concentration is less than the 8-hour TWA for an unmasked agent worker (see Table **V6.E4.T1.**). The air is sampled at a temperature of 70 °F [21.1 °C] or greater, with the facility's ventilation system operating.

V6.E4.7.4.3.2. 4R – Controlled Agent Vapor Hazard. A supplemental chemical hazard symbol (see Figure **V1.E10.F4.**) with "RRRR" indicates that all previously contaminated surfaces are decontaminated using locally approved procedures and air sampling indicates toxic CA vapor concentration is less than the 8-hour TWA for an unmasked agent worker (see Table **V6.E4.T1.**). The air is sampled at a temperature of 70 °F [21.1 °C] or greater, with the facility's ventilation system operating.

V6.E4.7.4.3.3. 3R – Contained Agent Hazard. A supplemental chemical hazard symbol (see Figure **V1.E10.F4.**) with "RRR" indicates that any toxic CAs are in containers or packaging that, if left undisturbed, will prevent agent vapor or contact hazards.

V6.E4.7.4.3.4. 2R – Agent Vapor Hazard. A supplemental chemical hazard symbol (see Figure **V1.E10.F4.**) with "RR" indicates that any toxic CAs are in containers or packaging that, if left undisturbed, prevent contact hazards.

V6.E4.7.4.3.5. lR – Agent Hazard. A supplemental chemical hazard symbol (shown in Figure **V1.E10.F4.**) with "R" indicates the possibility of toxic CA contact or vapor hazards, or agents in a single container or packaging that may leak. This includes rooms being used for operations that may cause agents to be released from ECs due to accidental causes.

V6.E4.7.5. Emergencies

V6.E4.7.5.1. In case of an accidental release of a toxic CA that may result in personnel exposure, evacuate all nonessential and unprotected personnel immediately. Decontaminate contaminated areas to applicable Table **V6.E4.T1.** AELs before resuming normal operations.

V6.E4.7.5.2. Start special medical surveillance within 24 hours for all personnel present in the potentially affected area at the time of the emergency.

V6.E4.7.5.3. The DoD Component must maintain up-to-date chemical accident and incident control plans and conduct practice exercises of these plans at least annually.

V6.E4.7.6. Toxic CA Decontamination

V6.E4.7.6.1. When toxic CAs are spilled or released, take immediate action to contain the spill and clean up the agent in the immediate area of the spill.

V6.E4.7.6.2. Before leaving contaminated work areas, decontaminate the external surfaces of the PPE.

V6.E4.7.6.3. When PPE becomes contaminated with toxic CAs, remove the outside layer of clothing and decontaminate it as soon as possible.

V6.E4.7.6.4. PPE that has been worn in known contaminated areas (toxic CA detected) must be decontaminated and monitored before reuse. Because mustard penetrates into many protective materials with time, do **not** reuse any PPE that has been contaminated with liquid mustard. Monitor PPE that has been worn in potentially contaminated areas (when no agent leakage has been visually observed or detected by use of field detection equipment) before moving it to areas accessible to non-agent workers.

V6.E4.7.6.5. Monitoring of protective clothing and equipment must include containerization at 70 °F [21.1 °C] or higher for at least 4 hours, with subsequent analysis of a portion of the interior atmosphere of the container for the toxic CA. Note the volume of the container as well as the sample volume.

V6.E4.7.6.6. Do not reuse PPE found to emit toxic CA concentrations above the XXX level after decontamination. Dispose of it in accordance with the DoD Component guidance and in compliance with all federal, State, and local requirements.

V6.E4.7.6.7. Before toxic CA disposal systems are converted to different agents, fill the piping, tanks, etc. of the disposal systems with decontaminating solution and provide contact time of 10 half lives or greater. Decontaminate walls and floors of process areas to remove any contact hazards.

V6.E4.7.7. Recertification of Protective Clothing. After decontamination, clothing that has been determined to be XXX may be laundered, visually examined, and recertified by the DoD Component for use. Other PPE, such as boots and gloves, must be tested, laundered, and recertified for use in the same manner.

V6.E4.7.8. Transportation of Items or Materials Contaminated with Toxic CAs. Items or materials contaminated with toxic CAs may be transported from one location to another. They must be encapsulated within an agent-tight barrier. In addition, the following must be overpacked in compatibly lined drums or provided with other suitably tested containment before being transported:

V6.E4.7.8.1. Items or materials potentially contaminated with liquid toxic CA.

V6.E4.7.8.2. Items or materials that fail a XXX determination.

V6.E4.7.8.3. Items or materials suspected of offering hazards due to skin exposure to a toxic CA.

V6.E4.7.9. Transportation of Toxic Chemical Munitions and Bulk Agents. The requirements established by the DoD Component must be met.

V6.E4.8. ENGINEERING DESIGN GUIDANCE FOR FACILITIES. Isolate the chemical handling and maintenance areas associated with industrial operations from the main facility and operate them at a negative pressure with respect to the main facility. Equip the agent handling rooms with local exhaust ventilation that may be cascaded to more contaminated areas and exhausted out of a common exhaust stack. Filter all air leaving the facility through redundant filter banks or other DDESB-approved decontamination methods. The flow of air (negative pressures) must go from less-hazardous areas to more-hazardous areas.

V6.E4.8.1. Air Ventilation Systems. Design and periodically test air ventilation systems to ensure that toxic CA-contaminated exhaust does not exceed source emission limits of Table **V6.E4.T1.**

V6.E4.8.1.1. Design filters or scrubbers for exhaust air for the MCE of the operations involved. DDESB must approve the design.

V6.E4.8.1.2. Use redundant filters when filter breakthrough of the toxic CA is expected. Change filters when agent breaks through the filter that is just upstream of the last filter.

V6.E4.8.1.3. All exhaust equipment must have backup blowers that automatically engage if the main blower fails.

V6.E4.8.1.4. Fit filter systems with the means to measure the pressure drop across the filters.

V6.E4.8.1.5. Design exhaust hoods and glove boxes to contain toxic CAs so that concentrations specified in Table **V6.E4.T1.** for unmasked agent workers are not exceeded outside ECs. The design of these items must permit airflow adjustments sufficient to maintain the required protection level when laboratory equipment is in place.

V6.E4.8.1.5.1. Provide catch basins and traps or spill trays of sufficient capacity to contain the quantity of toxic CA involved within hoods and glove boxes.

V6.E4.8.1.5.2. Use glove boxes when the hazards analysis indicates that toxic CA aerosols or dusts may be present during an operation.

V6.E4.8.1.6. Use special design features when exposed explosives are involved to segregate explosives from air ventilation systems.

V6.E4.8.2. Mechanical and Utilities Design for Facilities

V6.E4.8.2.1. The design parameters must consider equipment and process layout, makeup airflow, and operational positions with regard to maintaining flow balance and cross currents. The system must maintain negative pressure in operating areas in relation to hallways, offices, and other nontoxic CA areas.

V6.E4.8.2.2. Construct working surfaces, walls, floors, and ceilings within a facility likely to be contaminated of agent-resistant materials. Flooring material must cover wall surfaces to a height of 6 inches [15.2 centimeters].

V6.E4.8.2.3. Persons must have access to nontoxic CA areas (e.g., utilities, mechanical rooms, etc.) without needing to enter into toxic CA areas.

V6.E4.8.2.4. Equip electrical systems with a backup power source designed to start automatically and supply sufficient power to support critical functions in the event of power outage.

V6.E4.8.2.5. Safety showers and eyewash fountains must be readily accessible and tested.

V6.E4.8.2.6. Fit water outlets in a toxic CA operational facility with backflow devices.

V6.E4.8.2.7. Design dedicated liquid waste systems to collect and hold potentially toxic CA-contaminated effluent produced by the activity until disposal in accordance with applicable laws. Fit vents or other openings in the waste system with approved toxic CA filters or connect or exhaust to a facility toxic CA air filtration system.

V6.E4.8.2.8. Provide decontamination facilities of sufficient capacity to catch and contain liquid effluents for toxic CA operations. Maintain adequate decontamination solution for immediate use on personnel or on facilities.

V6.E4.8.2.9. When operations require work assignments to be conducted at exposure levels above or potentially above the AEL for unmasked agent workers (as shown in Table **V6.E4.T1.**), provide change facilities with showers.

V6.E4.8.3. General Design Considerations

V6.E4.8.3.1. Facility Alarms and Monitors for Engineering Systems. Each toxic CA facility must have a master alarm and control panel that will permit functional verification of the exhaust blowers and air handlers. Visual and audible alert alarms must be keyed to this master alarm panel to indicate failures.

V6.E4.8.3.2. Fire Detection and Protection. Fire detection and protection systems for production and maintenance facilities must comply with the requirements and guidelines in U.S. Army Armament and Research and Development Command publication.

V6.E4.8.3.3. Bulk Storage Tanks. Impermeable dikes to hold at least 110 percent of the tank capacity, plus the required volume of decontaminant solution, must be placed around all bulk agent tanks, reactors, and mixers. However, a system designed to pump the toxic CA from the dikes to a vessel designed to accommodate the decontamination will satisfy this requirement that the dike contain sufficient volume for the decontaminating solutions.

V6.E4.8.3.4. Isolation of Facility Functions. Toxic CA facilities must be designed to isolate unrelated activities by physical barriers or approved ECs. Design criteria must prevent explosives from entering drain lines and sumps containing toxic CAs.

V6.E4.8.3.5. Monitoring. Air monitoring stations must be established around toxic CA operational areas and storage areas to determine if Table **V6.E4.T1.** AELs are exceeded. In laboratory environments, this requirement is met by routine area monitors and stack sampling.

V6.E4.8.3.5.1. Monitoring analyses conducted to demonstrate compliance with AELs must be based on DoD Component-certified reference materials.

V6.E4.8.3.5.2. Monitoring analyses conducted to demonstrate compliance with AELs must be conducted in accordance with quality assurance plans that address the:

V6.E4.8.3.5.2.1. Production, characterization, and storage of DoD Component-certified reference materials.

V6.E4.8.3.5.2.2. Documentation of precision, accuracy, and quantification limits of analytical methodology.

V6.E4.8.3.5.2.3. External oversight of laboratory results.

VOLUME 6 – ENCLOSURE 5: RISK-BASED SITING

V6.E5.1. SCOPE. This enclosure provides guidance and minimum requirements for quantitative risk-based siting. It provides the basis for quantifying the risks from a PES to personnel at each exposed ES (individual risk (probability of fatality (P_f))) and at all exposed ESs (group risk (expected fatalities (E_f))) by performing a quantitative risk assessment when the QD criteria of this manual cannot be met. Procedures are provided for preparing, submitting, and periodically reviewing risk-based site plans.

V6.E5.2. RISK-BASED SITING TOOL

V6.E5.2.1. Safety Assessment for Explosives Risk (SAFER©) is a DDESB-approved software code (tool) for conducting risk-based explosives safety siting (DDESB Technical Paper 19). A detailed description of the approved risk and analysis approach and methodology (model) implemented in SAFER© is given in DDESB Technical Paper 14.

V6.E5.2.2. The approved model for risk-based siting (DDESB Technical Paper 14) provides risk estimates for individual and group risks.

V6.E5.2.2.1. P_f is a function of the probability of an explosives event, the P_f given an event and exposure, and the exposure of one person.

V6.E5.2.2.2. E_f is a function of the probability of an explosives event, the P_f given an event and exposure, and the exposure of all persons within the risk-based evaluation distance.

V6.E5.2.2.3. The approved model treats those risk estimates as statistical distributions.

V6.E5.2.3. The approved model is only applicable if all PESs are separated by IMD in accordance with this manual, or the individual NEWQDs for each PES are summed and treated as a single PES.

V6.E5.3. RISK-BASED SITE PLANNING REQUIREMENTS. A risk-based explosives safety site plan submitted to the DDESB for approval must satisfy these conditions:

V6.E5.3.1. Have in place a current QD waiver, exemption, or Secretarial Certification, or an approved justification for the proposed siting. In the latter case, the DoD Component must determine procedures for approving the justification. The DoD Component-approved justification must be provided with the risk-based explosives safety site plan; this justification is provided for information purposes only and is not subject to DDESB approval.

V6.E5.3.2. Use the latest approved version of the SAFER© code or equivalent DDESB-approved analysis tools for risk-based explosives safety site plan assessments. (See section **V6.E5.7.** for requirements for equivalent analysis tools.) The DoD Components may submit

explosives safety site plans to the DDESB for approval that were initiated under previous versions of SAFER© or the equivalent DDESB-approved analysis tool.

V6.E5.3.3. Evaluate all ESs within the ES group exposed by the PES (of the PES/ES pair not meeting QD separation criteria). The ES group contains those ESs out to a distance from the PES where contributions to P_f are no longer significant (i.e., out to the risk-based evaluation distance where P_f is equal to $1x10^{-8}$ for an individual present 24/7/365 in the open or IBD, whichever is greater).

V6.E5.3.4. Determine P_f by summing the risks from all PESs that expose the ES to significant risk (i.e., from all PESs for which the ES is in the ES group exposed by the PES).

V6.E5.3.5. Evaluate ESs exposed to a new PES and include significant risks from all other PESs.

V6.E5.3.6. Determine group risk by summing all P_f, as explained in paragraph **V6.E5.3.4.**, for all of the ESs within the ES group, as described in paragraph **V6.E5.3.3.**

V6.E5.3.7. Use (i.e., input) the full siting amount (NEWQD) and full yield.

V6.E5.3.8. Accept, as the DoD Component, the risks not evaluated by the DDESB-approved risk tool (i.e., risks to facilities, equipment, assets, and mission). This risk acceptance by the DoD Component does not address other violations of this manual.

V6.E5.3.9. Ensure the results of the quantitative risk assessment satisfy the criteria of Table **V6.E5.T3.**

Table V6.E5.T1. Risk-Based Explosives Siting Acceptance Criteria

Risk to:	Criteria:
Any one related individual – Related P_f	$\leq 1x10^{-4}$ per year
All related individuals – Related E_f	$\leq 1x10^{-3}$ per year
Any one unrelated individual – Unrelated P_f	$\leq 1x10^{-6}$ per year
All unrelated individuals – Unrelated E_f	$\leq 1x10^{-5}$ per year

V6.E5.4. RISK-BASED EXPLOSIVES SAFETY SITE PLAN DOCUMENTATION REQUIREMENTS. Risk-based explosives safety site plans submitted to the DDESB for approval must include:

V6.E5.4.1. The DoD Component approved justification for not meeting QD as addressed in paragraph **V6.E5.3.1.**

V6.E5.4.2. Explanation of assumptions made for the inputs in the DDESB-approved risk tool to define the situation to be analyzed.

V6.E5.4.3. Explanation of inputs used in the DDESB-approved risk tool.

V6.E5.4.4. Summary of results compared to the risk-based siting acceptance criteria in accordance with Table **V6.E5.T3.**

V6.E5.4.5. Data required in accordance with paragraph **V1.E5.2.3.** Site plan documentation is required.

V6.E5.5. RISK-BASED EXPLOSIVES SAFETY SITE PLAN REVIEW REQUIREMENTS. DDESB-approved risk-based site plan reviews must be conducted:

V6.E5.5.1. By the originating DoD Component a minimum of every 5 years to ensure that siting conditions have not changed. If conditions have not changed, this information must be documented in the site plan files at the installation and at the DoD Component confirming the continued acceptable status of the site plan. If conditions have changed, paragraph **V6.E5.5.2.** will be applied.

V6.E5.5.2. Whenever DDESB-approved siting assumptions and the risk-based program inputs change and those changes have a potential increase on individual or group risk, or if there is uncertainty as to what the risk impact will be. Examples of changes that might increase individual and group risk are adding additional personnel to an ES, adding a new ES, increasing NEWQD at a PES, adding a new PES, a change in PES mission, and changes in ES construction. In such cases, the existing risk-based explosives safety site plan must be updated and re-evaluated to determine the risk impact of the changes using one of these methods:

V6.E5.5.2.1. If risk does not violate the acceptance criteria in Table **V6.E5.T3.**, prepare a revised risk-based explosives safety site plan in accordance with the procedures in sections **V6.E5.3.** and **V6.E5.4.** and submit to the DDESB for approval.

V6.E5.5.2.2. If risk does violate the acceptance criteria in Table **V6.E5.T3.** but does not increase beyond the DDESB-approved risk-based siting criteria in effect at the time the explosives safety site plan was previously approved, prepare a revised risk-based explosives safety site plan in accordance with the procedures in sections **V6.E5.3.** and **V6.E5.4.** and submit to the DDESB for approval.

V6.E5.5.2.3. If the risk violates both the acceptance criteria in Table **V6.E5.T3.** and the DDESB-approved risk-based siting acceptance criteria in effect at the time the explosives safety site plan was previously approved, the DDESB-approved risk-based siting is no longer valid, and the DDESB must be notified.

V6.E5.6. QUANTITATIVE RISK MANAGEMENT COMPARATIVE ANALYSIS. It is recommended that a DDESB-approved risk-based assessment model be used for conducting comparative analyses for risk management purposes as addressed in paragraph **V6.E5.3.2.**

V6.E5.7. EQUIVALENT RISK-BASED ANALYSIS TOOL. An equivalent risk-based analysis tool for use in risk-based siting must meet these requirements to be approved by the DDESB:

V6.E5.7.1. Address all applicable aspects of the approved risk-based model described in DDESB Technical Paper 14.

V6.E5.7.2. Document all data sources used to develop the algorithms used in the model.

V6.E5.7.3. Provide software validation and verification results to the DDESB for an assessment and have the software certified by the DoD Information Technology Security Certification and Accreditation Process.

V6.E5.7.4. Provide the results of a peer review of the model to the DDESB for an assessment.

INTENTIONALLY LEFT BLANK

VOLUME 7: UXO, MUNITIONS RESPONSE, WASTE MILITARY MUNITIONS, AND MATERIAL POTENTIALLY PRESENTING AN EXPLOSIVE HAZARD (MPPEH)

V7.1. INTRODUCTION. This volume provides criteria for UXO, munitions response, waste military munitions, and MPPEH.

VOLUME 7 – ENCLOSURE 1: REFERENCES

See References section at the end of the manual.

VOLUME 7 – ENCLOSURE 2: RESPONSIBILITIES

See Volume 1 – Enclosure 2.

VOLUME 7 – ENCLOSURE 3: UXO

V7.E3.1. SCOPE. This enclosure establishes standards to protect personnel and property from explosive and CA hazards (see **Volume 6 – Enclosure 4** for more information on CA hazards) associated with UXO or other military munitions, to include discarded military munitions (DMM), that have experienced abnormal environments. This enclosure's standards do not apply during contingencies, combat operations, and military operations other than war; however, these explosives safety principles should always be considered in such circumstances and applied as the situation allows.

V7.E3.2. GENERAL

V7.E3.2.1. UXO are considered the most dangerous category of military munitions. However, other military munitions, to include DMM, that are encountered outside the DoD munitions logistics management system, particularly those that have experienced an abnormal environment, should be considered equally dangerous and managed as UXO until assessed and determined otherwise by technically qualified personnel (i.e., EOD personnel, EOD-qualified U.S. Army Forces Command/20th Support Command/22nd Chemical Battalion personnel and, when specifically authorized by a DoD Component, UXO-qualified personnel).

V7.E3.2.1.1. Military munitions that have experienced abnormal environments include, but are not limited to, munitions remaining after attempted demilitarization by OB or OD; munitions involved in accidents or fires; and munitions or components subjected to certain tests (e.g., fuze arming tests, jolt, and jumble tests) that might cause arming.

V7.E3.2.1.2. U.S. Army Forces Command/20th Support Command/22nd Chemical Battalion is manned with specially trained personnel that provide verification; sampling; detection; mitigation; render safe; decontamination; packaging; escort; and remediation of chemical, biological, and industrial devices or hazardous materials.

V7.E3.2.1.3. UXO will most likely be found in areas that the DoD currently uses (e.g., operational ranges) or once used (e.g., former ranges) for military munitions training or testing. UXO can also be encountered in other areas, to include where contingency, combat, or military operations other than war have occurred.

V7.E3.2.1.4. Munitions that may have experienced an abnormal environment might be encountered in areas where an accident or incident involving military munitions occurred or in areas that the DoD uses or once used for OD of excess, obsolete, or unserviceable military munitions.

V7.E3.2.2. Positive identification of any potential explosive or CA hazards and consideration of the potential consequences of an intentional or accidental detonation is required before disposition of any recovered munitions. This is essential for munitions that might contain CAs that would pose a potential downwind CA hazard. Therefore, for both explosives and CA safety reasons, munitions found outside the DoD's established logistical munitions management

systems (e.g., UXO, DMM) must be managed as UXO until assessed, identified, and evaluated as to their explosive or CA hazards and determined otherwise by technically qualified personnel. Munitions that contain an unknown liquid fill must also be managed as chemical warfare material (CWM) until assessed and the fill determined.

V7.E3.2.2.1. Only EOD personnel and, in some cases, U.S. Army Forces Command/20th Support Command/22nd Chemical Battalion personnel will respond to military or civilian authority requests for support to an explosives or munitions emergency.

V7.E3.2.2.2. For responses that either involve recovered chemical warfare material (RCWM) or munitions that contain an unknown liquid fill, U.S. Army Forces Command/20th Support Command/22nd Chemical Battalion personnel and, in cases where the munitions' physical characteristics allow positive identification, EOD personnel, are the only DoD personnel authorized to determine the most probable fill of such munitions. The determination as to whether certain munitions contain a CA fill is difficult, if not impossible, solely by visual inspection.

V7.E3.2.2.2.1. Many munitions have physical characteristics (e.g., shape, markings) that permit technically qualified personnel to rule out the potential for a CA fill (e.g., a U.S.-manufactured 4-inch Stokes mortar's physical dimensions clearly indicate whether it contains a CA or explosive fill). However, the design or physical condition of some munitions may not allow their complete identification by visual inspection. This is especially true for used munitions and for munitions that have either experienced abnormal environments or been exposed to the elements (e.g., buried or submerged) for an extended period.

V7.E3.2.2.2.2. Munitions with an external design that does not always allow positive visual identification of their filler include, but may not be limited to: 4.2-inch mortars (M1, M2, and the M2A1 models) and Livens projectiles (MKII (M1) and MKIIAI) models. U.S. Army Forces Command/20th Support Command/22nd Chemical Battalion personnel and, in some cases, EOD personnel, are the only DoD personnel authorized to determine the most probable fill of these munitions.

V7.E3.2.3. Discovery of military munitions (e.g., UXO) outside the DoD munitions logistics management system might indicate, in some circumstances that a munitions response (see **Enclosure 4** of this volume for munitions response requirements) or other protective measures are warranted. The DoD Components must notify the Executive Director, DDESB, and their respective Service-level explosives safety office of:

V7.E3.2.3.1. Repetitive explosives or munitions emergency responses to a discrete geographic area, where the circumstances surrounding the explosives or munitions emergency response are similar.

V7.E3.2.3.2. A single explosives or munitions emergency response that involves multiple military munitions (e.g., UXO, DMM, or RCWM) discovered at a discrete geographic area. Such discoveries might indicate that the area is a formerly used defense site (FUDS).

V7.E3.2.4. The Explosive Ordnance Disposal Incident Management System (EODIMS) is the joint service program of record used for reporting EOD response activities across the Department of Defense. All military services will use the EODIMS to ensure all incidents are similarly reported and retained in a single DoD database (NIPR and SIPR), which can be queried, and will automatically identify the conditions of paragraph **V7.E3.2.3.**

V7.E3.3. DISPOSITION OF UXO AND OTHER MILITARY MUNITIONS BEING MANAGED AS UXO

V7.E3.3.1. DoD is responsible for protecting people, property, and the environment from potential explosive hazards (e.g., blast and fragmentation) or CA hazards (e.g., downwind hazards) associated with DoD-owned UXO. DoD is equally responsible for protecting personnel who respond to address such hazards.

V7.E3.3.2. The DoD Components must work collaboratively with environmental regulators and safety officials toward resolving, in a mutually agreeable manner, any concerns with the planned disposition of UXO during a response action; however, the protection of people, to include DoD response personnel, from the hazards associated with the discovered munitions and their disposition is paramount.

V7.E3.3.3. There are no safe procedures for moving, rendering safe, or destroying UXO, merely procedures considered less dangerous. Destruction-in-place (also referred to as blow-in-place (BIP)) is the least dangerous; therefore, it is the preferred method of UXO destruction.

V7.E3.3.4. DoD response actions to address UXO must comply with these standards and other applicable DoD policies and with applicable federal, State, interstate, and local laws and regulations, and any enforceable agreements. The DoD Components must ensure that, if not already in place, protective measures (e.g., site security) are implemented as quickly as practicable following discovery of UXO or other munitions outside the DoD munitions logistics management system. Should environmental regulators and safety officials have concerns regarding the sufficiency of the protective measures to be taken, these concerns should be raised to the appropriate-level DoD authority for resolution. Protective measures must be maintained throughout any delay caused by:

V7.E3.3.4. **(Added)(AF)** Environmental concerns will be raised to AFSEC/SEW, who in-turn notifies the Chairman, DDESB for resolution. **(T-1).**

V7.E3.3.4.1. Compliance with laws, regulations, and agreements.

V7.E3.3.4.2. The need to address concerns raised by environmental regulators and safety officials about:

V7.E3.3.4.2.1. Methods for managing any potential adverse impacts (e.g., harming endangered species, damaging cultural resources) of implementing a pending BIP operation.

V7.E3.3.4.2.2. The use of alternative (to BIP) disposition methods.

V7.E3.3.4.3. Other factors (e.g., weather).

V7.E3.3.5. Military munitions known to contain CAs or that contain or are suspected to contain an unknown liquid fill will not normally be destroyed by OD because they pose potential downwind CA hazards. The responsible DoD Component (normally the Department of the Army), no lower than the Deputy Assistant Secretary level, may approve individual exceptions. Such exceptions should only be approved after discussions (as addressed in paragraph **V7.E3.3.2.**) with appropriate elected representatives, environmental regulators, and safety officials from those communities that could potentially be impacted by the munitions' disposition. The DoD Components must make sure that protective measures to ensure explosives safety are maintained during any delay in disposition.

V7.E3.3.6. UXO must not be moved unless technically qualified personnel determine that the risks associated with movement are acceptable. During munitions responses, specifically authorized UXO-qualified personnel may make this determination. Although environmental regulators and safety officials recognize the expertise of DoD personnel involved in UXO disposition decisions, they may challenge a DoD field expert's decision and seek to elevate their concerns to higher levels of authority for resolution as addressed in paragraphs **V7.E3.3.2.** and **V7.E3.3.4.**

V7.E3.3.6. **(Added)(AF)** The definitions of Munitions Rule (MR), Federal Register, Volume 62 is provided in the Glossary of this publication. Specifically, an MR does not include activities normally conducted by EOD on active and inactive ranges or energetic disposal procedures. The exception to this rule would be the use of UXO-Qualified personnel (non-active component members) for the MPPEH program and approved RDT&E programs per paragraph **V1.E6.22.**

V7.E3.3.6.1. If technically qualified personnel determine that the risk associated with movement is unacceptable, or if the munitions' condition precludes a complete assessment beyond positive identification of any potential explosive hazard or determination that it does not present a CA hazard, then it should be BIP.

V7.E3.3.6.2. In some circumstances, EOD personnel may determine that careful movement of a UXO, for a limited distance and using prescribed EOD procedures, is both necessary and allowed by EOD procedures. In such circumstances, destruction by detonation will occur in the general vicinity of discovery.

V7.E3.3.7. Under some circumstances, when BIP does not pose an immediate, certain, and unacceptable risk to people, critical operations, facilities, or equipment, environmental regulators and safety officials may seek collaboration (as addressed in paragraphs **V7.E3.3.2.** and **V7.E3.3.4.**) with the DoD Components to mutually agree to mitigation measures to reduce potential impacts of the pending BIP to public safety, the environment, and cultural resources.

V7.E3.3.7. **(Added)(AF)** Officials may seek collaboration with the Air Force installation commander.

V7.E3.3.8. When BIP poses an immediate, certain, and unacceptable risk to people, critical operations, facilities, or equipment, EOD personnel may determine that render safe procedures (RSPs) should be attempted.

V7.E3.3.8.1. Because the application of RSPs exposes EOD personnel to added risks (greater than BIP), the application of RSPs must only be attempted in limited circumstances.

V7.E3.3.8.2. Should EOD personnel employ RSPs, protective measures must be applied to mitigate potential explosive effects and, when necessary, a possible CA release.

V7.E3.3.8.3. Only EOD personnel are authorized to conduct RSPs.

V7.E3.3.8.4. EOD personnel must perform RSPs in accordance with Joint Service EOD technical data.

V7.E3.3.8.4.1. Conflicts between this manual and the Joint Service EOD Technical Data should be raised to the Executive Director, DDESB, and to the Joint EOD Program Board for resolution.

V7.E3.3.8.4.2. When the condition of UXO (e.g., crushed, bent, broken, mangled) prevents strict adherence to published procedures, on-site EOD personnel will determine and perform the procedure—established or innovative—that will have the most probable degree of success to render the munitions safe while mitigating potential explosive or, when necessary, CA effects.

V7.E3.3.9. The on-site EOD supervisor or, in the case of munitions responses, the UXO safety officer, must ensure that the detonation site is inspected after each detonation or any misfire. No one is allowed within MSD from the detonation site until the on-site EOD supervisor or UXO safety officer declares the area is safe.

V7.E3.3.10. When EOD personnel or, in the case of munitions responses, authorized UXO personnel, positively identify the explosive hazard of the UXO and determine it safe to dispose of by methods other than BIP or immediate destruction by detonation, either in the general vicinity of discovery or at a designated location, then technically qualified personnel or an appropriate-level DoD authority with the advice of technically qualified personnel may evaluate a variety of safe disposition alternatives and options for managing any potentially adverse impact of the selected disposition alternative.

V7.E3.4. SPECIAL CONSIDERATIONS

V7.E3.4.1. Disassembly and Inerting Operations

V7.E3.4.1.1. Disassembly and inerting operations must not be conducted without proper authorization.

V7.E3.4.1.2. The DoD Components must establish procedures for authorizing such operations.

V7.E3.4.1.3. **(Added)(AF)** Contact AFSEC/SEW for additional guidance on disassembly and inerting operations.

V7.E3.4.2. Construction Support

V7.E3.4.2.1. Construction support may be required during intrusive activities (e.g., laying or repairing utilities, improving roads) on property known or suspected to contain UXO or DMM.

V7.E3.4.2.2. The responsible authority (e.g., installation commander or designated representative) will determine the level of construction support required on a case-by-case basis. Construction support is determined by the probability of encountering UXO or DMM.

V7.E3.4.2.2.1. Low Probability. EOD personnel or UXO-qualified personnel must be contacted to ensure their availability, advised about the project, and placed "on call" to assist if suspected UXO are encountered during construction. Discoveries of UXO or DMM on such sites require reassessment of the level of support required.

V7.E3.4.2.2.1.1. A "low" determination may only be assigned to those areas for which a search of available historical records and on-site investigation data indicates that, given the military or munitions-related activities that occurred at the site, the likelihood that UXO or other MEC are present is low.

V7.E3.4.2.2.1.2. Munitions-related activities that may merit a "low" determination include, but are not limited to, the use of the area for live-fire training exclusively with small arms ammunition; for maneuver training, including maneuver training involving the use of smokes, pyrotechnics, and simulators; as firing points; for munitions inspection, handling, storage, or transfers, including residue points and inert storage yards; for air defense; or as munitions operating facilities, the exceptions being facilities in which the processes used might have resulted in the generation of concentrations of munitions constituents high enough to present an explosive hazard. Areas on which a previous response has been completed, pursuant to a DDESB-approved ESS, for the stipulated reuse also qualify for "low" determinations.

V7.E3.4.2.2.2. Moderate to High Probability. EOD personnel or UXO-qualified personnel must attempt to identify and remove any explosive or CA hazards in the construction footprint before any intrusive construction activities.

V7.E3.4.2.2.2.1. A "moderate to high" determination may be assigned to those areas for which a search of available historical records or on-site investigation data indicates that, given the military or munitions-related activities that occurred at the site, there is more than a low probability that UXO or other MEC are present.

V7.E3.4.2.2.2.2. Munitions-related activities that may merit a "moderate to high" determination include, but are not limited to, the use of the area for live-fire training other

than exclusively with small arms ammunition (e.g., munitions containing high-explosive projectiles); as operational range impact areas; for OB or OD of excess, obsolete, or unserviceable munitions; as munitions operating facilities where processes used might have resulted in the generation of concentrations of munitions constituents high enough to present an explosive hazard; for munitions burial; or for any activities involving possible disposition of CWM.

V7.E3.4.3. Anomaly Avoidance. Anomaly avoidance techniques must be employed on properties known or suspected to contain UXO or DMM to avoid surface UXO and, when necessary, subsurface anomalies.

V7.E3.4.3.1. When anomaly avoidance is used during training (e.g., maneuver training, live-fire training), testing, or operational range management activities conducted on such properties, the commander responsible for such activities will ensure:

V7.E3.4.3.1.1. A risk assessment to evaluate the potential hazards associated with the proposed activities is completed and methods to mitigate any potential exposures are implemented.

V7.E3.4.3.1.2. Training in anomaly avoidance, explosives safety and, when appropriate, CA safety training is provided to all personnel involved in the training, testing, or operational range management activities that access property known or suspected to contain UXO or DMM.

V7.E3.4.3.2. When anomaly avoidance is used during other than training or testing activities, or during activities involving other than operational range management activities:

V7.E3.4.3.2.1. Surface UXO must be avoided during any activities that require entry to the area (e.g., conducting cultural resource studies).

V7.E3.4.3.2.2. Surface UXO and subsurface anomalies must be avoided during any intrusive work (e.g., drilling environmental monitoring wells).

V7.E3.4.3.2.3. Escort support must be provided by EOD personnel or:

V7.E3.4.3.2.3.1. Within areas known or suspected to contain UXO, excluding CAs, regardless of configuration, by:

V7.E3.4.3.2.3.1.1. UXO-qualified personnel.

V7.E3.4.3.2.3.1.2. UXO Technician I personnel under the supervision of UXO-qualified personnel. The responsible commander or authority may, based on a risk assessment and implementation of methods to mitigate any potential exposures, approve UXO Technician I personnel to perform escort duties without supervision.

V7.E3.4.3.2.3.2. Within areas known or suspected to contain CAs, regardless of configuration, to include areas where such CA is commingled with other UXO, by UXO-qualified personnel trained in CWM responses.

V7.E3.4.3.2.4. During anomaly avoidance:

V7.E3.4.3.2.4.1. Discovered surface UXO must be avoided and their locations noted and reported to appropriate authorities.

V7.E3.4.3.2.4.2. Detected subsurface anomalies that must not be investigated will be marked, when appropriate, and avoided.

V7.E3.5. ACCESS TO AREAS KNOWN OR SUSPECTED TO CONTAIN UXO. To ensure explosives and CA safety risk is identified and controlled on real property currently or formerly under the jurisdiction, custody, or control of a DoD Component, the DoD Components must:

V7.E3.5.1. Prohibit unnecessary access (e.g., livestock grazing, recreational uses such as hunting and hiking) and take appropriate action to deter unauthorized access to areas under DoD control that are known or suspected to contain UXO or other munitions that have experienced abnormal environments.

V7.E3.5.1.1. Access to such areas, particularly operational range impact areas, will be limited to personnel who have an operational requirement to enter such areas (e.g., range maintenance, environmental monitoring, and security). A risk assessment to evaluate the potential hazards associated with the proposed activity must be completed and methods to mitigate any potential exposures implemented before allowing access.

V7.E3.5.1.2. Actions to prohibit or deter access may include establishing access controls (e.g., fencing the area, establishing roving security patrols) and providing public notifications (e.g., posting UXO hazard warning signs, conducting UXO safety education programs) of any potential hazards. When used, signs must be legible and, when appropriate, multilingual or pictograms.

V7.E3.5.2. When the DoD does not control the area (e.g., FUDS), at a minimum, provide written notification to the property owner and, if known, any tenants of the potential explosive and CA hazards present. A record of this notification must be maintained in permanent records.

V7.E3.5.3. Assume the following areas contain UXO or other munitions that have experienced abnormal environments:

V7.E3.5.3.1. Operational range impact areas, to include their associated safety zones (e.g., caution area, safety buffer zone). Exceptions include, but are not limited to, ranges used exclusively for training with small arms ammunition.

V7.E3.5.3.2. Ranges (sites) used for OB or OD of excess, obsolete, or unserviceable munitions.

V7.E3.5.3.3. Former impact areas and former OB or OD sites, unless documentation exists to show that they were adequately cleared during range closure or that an appropriate munitions response has been completed. In some cases, because these former impact areas or former OB or OD sites may have transferred from DoD control, the DoD's ability to restrict access may be limited or nonexistent. In such cases, the responsible DoD Component must, at a minimum, ensure that:

V7.E3.5.3.3.1. The property owner is provided written notification of the potential explosives and CA hazards and the risks inherent in any use of property that is inconsistent with those hazards.

V7.E3.5.3.3.2. A public UXO safety education program is implemented, when appropriate.

V7.E3.5.4. On DoD property, prohibit construction in areas known or suspected to contain UXO or DMM without required:

V7.E3.5.4.1. Construction or UXO avoidance support as addressed in paragraph **V7.E3.4.2.** or **V7.E3.4.3.**

V7.E3.5.4.2. Approved ESS, chemical safety submission (CSS), or site plan for munitions responses. (See **Enclosure 4** of this volume for munitions response requirements.)

V7.E3.5.5. Provide, or in the case of owners or tenants of non-DoD controlled property, offer explosives and, when appropriate, CA safety training to all individuals authorized to access DoD property known or suspected to contain UXO.

V7.E3.5.6. Develop guidelines to determine when individuals, who for operational reasons (e.g., environmental monitoring), are authorized to access areas under DoD control that are known or suspected to contain UXO, must be escorted into the area in accordance with paragraph **V7.E3.4.3.2.3.**

V7.E3.5.7. Establish UXO safety education programs to educate DoD personnel, their dependents, and private citizens that live near areas known or suspected to contain UXO about explosive hazards and, when appropriate, CA hazards associated with UXO, and with the risks associated with trespassing on operational ranges or with entering areas known or suspected to contain UXO.

V7.E3.5.8. Before changing the use of a property known or suspected to contain UXO or munitions that have experienced abnormal environments to a use that is incompatible with their presence:

V7.E3.5.8.1. For operational ranges, perform an appropriate range clearance, whether changing to a similar (e.g., converting an impact area to a hand grenade range) or dissimilar use (e.g., changing a range to a maneuver area).

V7.E3.5.8.2. For areas on DoD property, other than operational ranges, perform an appropriate munitions response.

V7.E3.5.8.3. For property not under DoD control, upon learning of a proposed change in use or pertinent munitions response action, offer to engage in munitions response activities only to the extent necessary to ensure planned response actions afford appropriate protection from an explosives and CA safety perspective. The DoD engagement in such munitions response activities may be limited to explosives safety experts providing basic guidance and advice during applicable deliberations, decision making, and approval activities unless additional DoD services are arranged through contractual or reimbursement mechanisms between the DoD Components and other responsible parties.

V7.E3.6. IDENTIFICATION AND CONTROL. To ensure explosives and CA safety risk is identified and controlled on real property currently or formerly under the jurisdiction, custody, or control of a DoD Component, the DoD Components must create and maintain permanent records required by paragraph **V7.E4.2.2.** When an operational range is closed or an installation is deactivated, the DoD Component concerned must designate the office to transfer these records to ensure their permanent retention.

V7.E3.6. **(Added)(AF)** Installation commanders will create and maintain permanent records when an operational range is closed or an installation is deactivated. **(T-1).** The installation commander will designate the office to transfer these records to ensure their permanent retention. **(T-1).**

V7.E3.7. MSD FOR UXO

V7.E3.7.1. The MSD for intentional detonations (as addressed in **Volume 5 – Enclosure 3**), which may be reduced if supported by a hazard assessment or when using approved ECs listed in EOD publications (for explosives or munitions emergency responses), DDESB Technical Paper 15, or other DDESB-approved ECs (for munitions responses), is the greatest distance of:

V7.E3.7.1.1. Blast overpressure distance, as computed by using K-factor (English system) (K)328 [K-factor (metric system) (K_m) 130.1].

V7.E3.7.1.2. The calculated MFD, as provided in DDESB Technical Paper 16.

V7.E3.7.1.3. The appropriate downwind hazard distance for CAs.

V7.E3.7.2. The MSD for unintentional detonations (as addressed in Volumes **3**, **4**, and **5** of this manual), which may be reduced if supported by a hazard assessment or when approved ECs are employed, for:

V7.E3.7.2.1. Non-essential Personnel Distance. The non-essential personnel distance is the greatest distance of:

V7.E3.7.2.1.1. Blast overpressure distance, as computed by using K40 [K_m 15.87].

V7.E3.7.2.1.2. The calculated MFD, as provided in DDESB Technical Paper 16. Lesser distances, with a minimum of the HFD as provided in DDESB Technical Paper 16, may be used if supported by a hazard assessment. The minimum distance based on the HFD may be reduced as appropriate when approved ECs are used.

V7.E3.7.2.1.3. The appropriate downwind hazard distance for CAs.

V7.E3.7.2.2. Team Separation Distance (TSD). The TSD is the greatest distance of:

V7.E3.7.2.2.1. Blast overpressure distance, as computed by using K40 [K_m 15.87].

V7.E3.7.2.2.2. The appropriate downwind hazard distance for CAs.

V7.E3.8. OTHER CONSIDERATIONS

V7.E3.8.1. Transportation. All transportation must comply with the requirements of applicable federal, State, interstate, and local laws, and all implementing regulations relating to transportation of solid waste, hazardous substances, hazardous materials, and toxic substances.

V7.E3.8.1.1. UXO. Before UXO that may pose an explosive or CA hazard can be transported or shipped over public transportation routes, EOD personnel must determine whether the UXO is safe for transport. A determination that the UXO is safe for transport must be documented in the EOD incident report. A copy of the incident report must accompany the shipment. (See paragraph **V7.E6.3.4.** for transport of MPPEH.)

V7.E3.8.1.2. RCWM. Before RCWM may be transported or shipped, it must be assessed by the Army Material Assessment Review Board as safe for transport and packaged in an overpack container specifically designed and approved by the Army and by the DOT for the transport of RCWM. (See paragraph **V7.E4.5.9.6.** for RCWM hazard classification information.) In addition, the specific notifications and concurrences required in section 1512 of Title 50, U.S.C. must be met.

V7.E3.8.2. Firefighting Involving Areas Known or Suspected to Contain UXO or DMM. (See **Volume 1 – Enclosure 10** for additional firefighting information.)

V7.E3.8.2.1. Advanced planning is essential for firefighting operations involving areas that are known or suspected to contain UXO or DMM or CA hazards. Coordination of such plans between firefighters and explosives safety personnel, EOD personnel, or CA safety professionals, is essential.

V7.E3.8.2.2. Senior firefighting personnel should carefully assess whether to fight a fire involving areas that are known or suspected to contain explosive or CA hazards. Factors to consider include, but are not limited to: the types of munitions that might be present; the safety of firefighting personnel and of the public; the potential loss of critical assets; and the duration and intensity of the fire.

V7.E3.8.2.2.1. When senior firefighting personnel decide not to fight such fires, the area should be evacuated until it has cooled for at least 24 hours. (See paragraph **V1.E10.5.2.** for emergency withdrawal distances.)

V7.E3.8.2.2.2. When senior fighting personnel decide to fight such fires, all firefighters involved in fighting the fire should be provided basic safety training for fighting fires involving military munitions.

V7.E3.8.3. Controlled Burns

V7.E3.8.3.1. Burning vegetation to facilitate safe UXO clearance or removal operations is permitted, provided proper safeguards are in place to protect all personnel from unintentional detonations.

V7.E3.8.3.1.1. These burns must be carefully planned and executed to manage explosives safety risks and environmental effects.

V7.E3.8.3.1.2. During such burning operations, all personnel must be at MFD from the burning or burned area, based on the munition with the greatest fragmentation distance (MGFD), and must remain out of the area until it has cooled for at least 24 hours.

V7.E3.8.3.2. Controlled burns will not be performed on areas known or suspected to contain CWM.

V7.E3.8.4. Technology

V7.E3.8.4.1. Explosives safety is a paramount consideration when determining the most appropriate technologies to be used to detect, excavate, remove, and dispose of UXO and other munitions that present an explosive hazard.

V7.E3.8.4.2. The use of remotely operated equipment (e.g., excavators, sifters, and shredders) or other standoff technologies (e.g., lasers) may offer the safest approach for excavating and destroying UXO and should be considered.

V7.E3.8.4.3. Apply the requirements of paragraph **V7.E4.5.8.3.5.** for mechanized UXO processing operations.

VOLUME 7 – ENCLOSURE 4: REAL PROPERTY KNOWN OR SUSPECTED TO CONTAIN MEC AND CAS

V7.E4.1. SCOPE. This enclosure:

V7.E4.1. **(Added)(AF)** Use every means possible to protect the general public and the environment from exposure to AE hazards. This includes all explosive hazard areas, suspected or known to exist, on real property currently or formerly under USAF ownership or control.

V7.E4.1.1. Establishes explosives safety standards that, when applied, will protect people and real property from explosive and CA hazards associated with:

V7.E4.1.1.1. Real property known or suspected to contain:

V7.E4.1.1.1.1. MEC.

V7.E4.1.1.1.2. CAs in other than munitions configurations (e.g., DoD laboratory vials, CA identification sets, one-ton containers, CA-contaminated soil).

V7.E4.1.1.2. Munitions responses to MEC. (A munitions response to CA-filled munitions will be addressed as a CWM response.)

V7.E4.1.1.3. CWM responses.

V7.E4.1.2. Establishes a process for determining site-specific actions that, when taken, will:

V7.E4.1.2.1. Ensure explosives safety is addressed throughout munitions responses to MEC.

V7.E4.1.2.2. Ensure CA safety and, when applicable, explosives safety is addressed throughout CWM responses.

V7.E4.1.2.3. Result in DDESB approval of required safety submissions for munitions responses to MEC and for CWM responses Safety submission requirements can be found in section **V7.E4.5.**

V7.E4.1.2.4. Document and report completion of:

V7.E4.1.2.4.1. Munitions responses to MEC.

V7.E4.1.2.4.2. CWM responses.

V7.E4.1.3. Does not apply to:

V7.E4.1.3.1. Operational ranges, with the exception of military munitions burial sites located on such ranges.

V7.E4.1.3.2. Explosives or munitions emergency responses.

V7.E4.2. EXPLOSIVES SAFETY STANDARDS FOR THE IDENTIFICATION AND CONTROL OF AREAS KNOWN OR SUSPECTED TO CONTAIN MEC OR CAs. To ensure explosives and CA safety risk is identified and controlled on real property currently or formerly under the jurisdiction, custody, or control of a DoD Component, the DoD Components must:

V7.E4.2.1. Identify all areas known or suspected to present explosive or CA hazards. Geographic Information Systems should be used:

V7.E4.2.1.1. In installation master plans for active installations. (In some cases, these areas are also required to be identified in other documents.)

V7.E4.2.1.2. In the DoD Military MRS Inventory for all sites included in the Military Munitions Response Program in accordance with DoDI 4715.07, DoDM 4715.20, and section 2710(a) of Title 10, U.S.C.

V7.E4.2.2. Maintain permanent records of those areas identified pursuant to paragraph **V7.E4.2.1.** and ensure such records are readily available to current and future users of the property. Records should be retained for areas such as operational ranges, former ranges, current or former munitions manufacturing facilities, current or former sites used for munitions demilitarization activities, and locations previously used for the burial of munitions. Records must:

V7.E4.2.2.1. When practicable, include the nomenclature and the known or suspected location.

V7.E4.2.2.2. Summarize any clearance or response (removal or remediation) actions, or explosives or munitions emergency responses previously conducted within the area.

V7.E4.2.3. Prohibit unnecessary access and take appropriate action to deter unauthorized access to areas under DoD control that are known or suspected of containing potential explosive or CA hazards. Such actions may include establishing access controls (e.g., fencing the area, establishing roving security patrols), which may be risk-based, or providing public notifications of any potential hazards (e.g., posting UXO-hazard warning signs, conducting UXO-safety education programs). When used, signs must be kept legible and, when appropriate, in the predominant languages of the region, or as pictograms.

V7.E4.2.3.1. When the DoD does not exercise jurisdiction, custody, or control over the area (e.g., FUDS), the responsible DoD Component must, at a minimum, provide written notification of the potential explosive or CA hazards to the property owner and any known

tenants. A record of this notification must be maintained as a permanent record as addressed in paragraph **V7.E4.2.2.**

V7.E4.2.3.2. Unless there is evidence to the contrary, the DoD Components should, assume that the areas which present explosive hazards include:

V7.E4.2.3.2.1. Impact areas on operational ranges. Exceptions are ranges known to have been exclusively used for training with only small arms ammunition.

V7.E4.2.3.2.2. Former ranges known or suspected to contain MEC.

V7.E4.2.3.2.3. Outdoor demolition areas, to include locations used for OB or OD.

V7.E4.2.3.2.4. Areas that are associated with military munitions production, demilitarization, renovation, or similar processes (e.g., operating buildings and any installed equipment) that generated explosives residues (e.g., dust, vapors, liquids) and that might have become contaminated with such residues in concentrations sufficient to present explosive hazards, to include areas receiving processing wastewater (e.g., settling ponds, drainage swales).

V7.E4.2.3.3. Unless there is evidence to the contrary, the DoD Components should, assume that the areas which present CA hazards include:

V7.E4.2.3.3.1. Former CWM or CA burial sites.

V7.E4.2.3.3.2. Former CWM or CA disposal areas.

V7.E4.2.3.3.3. Former CWM impact areas.

V7.E4.2.3.3.4. Former training areas used for training with CWM or CAs.

V7.E4.2.3.3.5. Former CWM or CA production and demilitarization facilities.

V7.E4.2.3.4. When access to areas known or suspected to present explosive or CA hazards is necessary, a risk assessment must be completed to evaluate the potential hazards associated with the proposed activity and methods to mitigate any potential exposures must be implemented before access is allowed. When access is necessary to real property not under DoD ownership, custody, or control, the DoD Component should obtain a right of entry for the property.

V7.E4.2.4. Prohibit the disposal of military munitions on land or in water except when specifically authorized by the DoD Component. Such disposal actions must comply with applicable regulatory requirements. This prohibition does not preclude:

V7.E4.2.4. **(Added)(AF)** Except when specifically authorized by the appropriate MAJCOM in coordination with AFSEC/SEW.

V7.E4.2.4.1. The covering of munitions with earth to control fragments and noise during authorized destruction by detonation.

V7.E4.2.4.2. The use of *in situ* capping when implemented as an engineered remedy under an authorized response action.

V7.E4.3. EXPLOSIVES AND CA SAFETY ASPECTS OF RESPONSE ACTIONS

V7.E4.3.1. General

V7.E4.3.1.1. Plans for munitions responses to MEC or CWM responses must:

V7.E4.3.1.1.1. Ensure close coordination between DoD explosives and CA safety organizations, DoD environmental organizations, and appropriate regulatory agencies and stakeholders, as appropriate.

V7.E4.3.1.1.2. Specify those actions necessary to protect DoD personnel, installation-related personnel, and the public from exposure to explosive and CA hazards.

V7.E4.3.1.1.3. Provide the design for and explain the execution of:

V7.E4.3.1.1.3.1. Munitions responses, when MEC has been determined to present an unacceptable risk.

V7.E4.3.1.1.3.2. CWM responses, when a CA, regardless of configuration, has been determined to present an unacceptable risk.

V7.E4.3.1.1.4. Explain how the selected response actions will achieve a degree of safety necessary for the current, determined, or reasonably anticipated future land use.

V7.E4.3.1.1.4.1. Provide the rationale for selection of technologies to be used to detect anomalies that can indicate the presence of MEC or CAs, regardless of CA configuration.

V7.E4.3.1.1.4.2. Address how periodically (e.g., during 5-year reviews or in accordance with long-term monitoring agreements) completed response actions will be reviewed to ensure the response remains effective. The need for such reviews is particularly important in areas where natural phenomena (e.g., frost heave, soil erosion, droughts, or tidal action) could expose MEC or CAs, regardless of CA configuration, or where land use controls (LUCs) constitute a major element of the response. These reviews must consider:

V7.E4.3.1.1.4.2.1. The explosives safety aspects of munitions responses to MEC.

V7.E4.3.1.1.4.2.2. The CA safety and, when applicable, the explosives safety aspects of CWM responses.

V7.E4.3.1.1.5. Address how the personnel qualification provisions of DDESB Technical Paper 18 will be met.

V7.E4.3.1.1.6. Be approved by the DDESB for compliance with this manual.

V7.E4.3.1.1.7. Provide for the submission of an after action report (AAR) to the DDESB upon completion of the response. AARs are not provided for DDESB approval, but are used to close out files maintained by the DDESB Staff.

V7.E4.3.1.2. The following pertain to residual explosive and CA hazards:

V7.E4.3.1.2.1. Some areas that the military has used for munitions-related activities (e.g., live-fire training or testing, OB or OD) or for CA-related activities may not be appropriate, even after the performance of response activities, for certain uses (e.g., residential development). Such areas include former military range impact areas on which the military has used munitions containing either HEs or CAs and sites used for either OB or OD. Such areas may, after a response, be better suited for uses that restrict or limit intrusive activities (e.g., wildlife refuges, surface recreational areas).

V7.E4.3.1.2.2. Some MEC or CAs, regardless of CA configuration, might not be detected or removed during a response. Although residual risks can be managed (e.g., by use of agreed-upon LUC, to include safety education; recurring reviews; and construction support), residual hazards might still exist.

V7.E4.3.1.2.3. From an explosives and CA safety perspective, the degree to which MEC or CA removal is undertaken depends largely on the current, determined, or reasonably anticipated future land use. When MEC or CAs, regardless of CA configuration, cannot be removed to the degree necessary to safely allow the current, determined, or reasonably anticipated future land use, the use must be changed or appropriately restricted to obtain DDESB approval of the relevant plan.

V7.E4.3.1.3. When DoD does not control the land and the imposition of LUC is not possible (e.g., on FUDS), the responsible DoD Component should, at a minimum, provide the property owner, and any known tenants, written notification of the potential residual explosive or CA hazards and the risks inherent in any use of property that is inconsistent with those hazards.

V7.E4.3.2. Explosives Safety and CA Safety Aspects in the Selection and Design of Responses. Explosives safety must be addressed in the selection and design of a munitions response to MEC. CA safety, and when applicable, explosives safety must be addressed in the selection and design of a CWM response. The protection afforded by a response must be consistent with the current, determined, or reasonably anticipated land use. The design of the response that is included in the required submission must consider the following site-specific information:

V7.E4.3.2.1. Historical Information. Historical information, which is documented in a written report, is gathered through a records search, to include the permanent records outlined in section **V7.E4.2.**, and interviews. The required information includes:

V7.E4.3.2.1.1. The boundaries of the response area. For munitions responses, the munitions response area (MRA) boundaries and the boundaries of any MRSs (e.g., firing points, impact areas, and burial sites) within the MRA are required.

V7.E4.3.2.1.2. The type of MEC known or suspected to be present based on the types of munitions-related operations, training, or testing previously performed in the MRA or MRS.

V7.E4.3.2.1.3. The type and configuration of any CA known or suspected to be present.

V7.E4.3.2.2. Land Use. Land use is the current, determined, or reasonably anticipated future use of real property. Because portions of the response area (e.g., the MRA or MRS) might be used differently (e.g., public highway, wildlife refuge, sports field, industrial complex), different responses actions (e.g., surface removal, subsurface removal, no removal, remedial response) may be appropriate within any given response area.

V7.E4.3.2.2.1. Where the land use is, or will be, limited to surface activities, the munitions or CWM response may only involve removing surface MEC or surface CAs (i.e., a surface removal). This removal may be technology aided.

V7.E4.3.2.2.2. When the land use will involve or allow intrusive activities to occur, the response will normally require a subsurface removal, and may require follow-on construction support.

V7.E4.3.2.2.3. Where the current, determined, or reasonably anticipated land use is compatible with the explosive or CA hazards present or suspected, a response action to remove any explosive or CA hazard may not be necessary.

V7.E4.3.2.2.4. Where a response would adversely impact natural or cultural resources, a removal action may not be practical.

V7.E4.3.2.3. Results of On-site Investigations. These results should be used to validate and augment information discovered during the historical review and to determine the specific boundaries of the response area (e.g., the boundary of an MRA or of any MRS within an MRA).

V7.E4.3.2.4. Analysis. A detailed analysis of available records, technical data, and the results of on-site investigations. This analysis should evaluate:

V7.E4.3.2.4.1. The types of MEC or CAs, regardless of CA configuration, known to be present, to include its technical characteristics (e.g., filler, fuzing) and estimated distribution.

V7.E4.3.2.4.2. The potential explosive or CA hazards present.

V7.E4.3.2.4.3. Physical site characteristics (e.g., flora and fauna (including endangered species), cultural, geological, topographical, hydrological).

V7.E4.3.2.4.4. Persons potentially endangered.

V7.E4.3.2.4.5. Information from previous or current responses.

V7.E4.3.2.5. LUCs. The appropriateness and effectiveness of LUCs to manage any residual explosives safety or CA safety risks.

V7.E4.3.2.6. Technology. The applicability, capabilities, and limitations of available technologies (e.g., detection, discrimination, removal).

V7.E4.3.2.7. Other Relevant Factors. Any additional information that may affect the response. For example, agreements, regulations, legislation, or sequencing under base realignment and closure cleanups.

V7.E4.4. SPECIAL CONSIDERATIONS

V7.E4.4.1. Explosive Soil

V7.E4.4.1.1. Because of some past munitions-related activities (e.g., settling ponds or explosives sumps at munitions production or demilitarization facilities), concentrations of explosives in soil (e.g., sand, sludge, clay) can exist such that the mixture itself presents an explosive hazard.

V7.E4.4.1.2. The NEWQD of explosive soil is the weight of the mixture multiplied by the explosives concentration (e.g., 1,000 lbs [454 kg] of explosive soil that is 10 percent trinitrotoluene (TNT) has an NEWQD of 100 lbs [45.4 kg]).

V7.E4.4.1.3. The concentration necessary to present an explosive hazard depends on the distribution and type of explosives in the soil and the soil's characteristics.

V7.E4.4.1.3.1. Primary (Initiating) Explosives

V7.E4.4.1.3.1.1. Soil containing 2 percent or more by weight of any primary explosive or mixture of primary explosives presents an explosive hazard and must be treated as HD 1.1.

V7.E4.4.1.3.1.2. Soil containing less than 2 percent by weight of any primary explosive does not present an explosive hazard.

V7.E4.4.1.3.2. Secondary Explosives

V7.E4.4.1.3.2.1. Secondary explosives are much less sensitive than primary explosives.

V7.E4.4.1.3.2.2. Soil containing 10 percent or more by weight of either any secondary explosives or a mixture of secondary explosives presents an explosive hazard and must be treated as HD 1.1.

V7.E4.4.1.3.2.3. Soil containing less than 10 percent by weight of any secondary explosive or a mixture of secondary explosives does not present an explosive hazard.

V7.E4.4.1.3.3. Nitroglycerin, Nitrocellulose, and Nitroguanidine

V7.E4.4.1.3.3.1. Soil containing 10 percent or more by weight of nitroglycerin, nitrocellulose, or nitroguanidine presents an explosive hazard and must be treated as HD 1.1.

V7.E4.4.1.3.3.2. Soil containing less than 10 percent by weight of nitroglycerin, nitrocellulose, or nitroguanidine does not present an explosive hazard. Care must be taken when applying this threshold rule to less-permeable soils, such as clay, that may cause nitroglycerin to pond, rather than be absorbed.

V7.E4.4.1.3.4. Other Energetic Materials Mixtures. The potential explosive hazard of such mixtures in soil may be unknown and may require testing. If the hazard is unknown, manage soil mixtures containing only propellants as secondary explosives, and all other soil mixtures containing energetics (e.g., liquid propellants) as primary explosives.

V7.E4.4.2. Real Property (Buildings and Installed Equipment).

V7.E4.4.2.1. Military munitions operating buildings (e.g., munitions production or demilitarization facilities) and any installed equipment may contain residual explosives that present an explosive hazard. Of particular concern are building features (e.g., floors, roofs, walls, drains, internal and external piping, ventilation systems) in which explosives residues could present explosive hazards and industrial equipment, particularly equipment with internal cavities from facilities used in munitions production or demilitarization operations (e.g., cast loading or milling, steam-out) that generated explosives residues (e.g., dust, vapors, liquids).

V7.E4.4.2.2. To the extent such buildings or installed equipment is believed to present an explosive or CA hazard, the DoD Components must submit to the DDESB for review and approval the explosives or CA safety provisions of any required plans for transfer or use of such buildings and installed equipment before use or transfer for purposes incompatible with the presence of the explosive hazard (see Enclosure **6** of this volume for requirements for transfer of MPPEH).

V7.E4.4.2.2. **(Added)(AF)** Installations, in coordination with MAJCOM and AFSEC/SEW, will submit to the DDESB for review and approval the explosives or CA safety provisions. **(T-1).**

V7.E4.4.3. Construction Support

V7.E4.4.3.1. The DoD Components should consider the level of construction support required, based on site-specific data, during:

V7.E4.4.3.1.1. Intrusive activities (e.g., building construction, laying utilities, or road improvements) on property known or suspected to contain MEC or CAs, regardless of CA configuration, or on property on which residual explosive or CA hazards may exist.

V7.E4.4.3.1.2. The removal or remediation of debris or media in areas where there is a probability of encountering MEC (e.g., former OB or OD grounds) or CAs.

V7.E4.4.3.2. The responsible authority (e.g., installation commander or designated representative) will determine whether such support is required and the level of effort of required support on a case-by-case basis (see paragraph **V7.E4.5.7.** for construction support site plan requirements). Construction support is determined by the probability of encountering MEC or CAs, regardless of CA configuration.

V7.E4.4.3.2.1. Low Probability. "On-call" construction support is appropriate for low probability of encountering MEC or CAs, regardless of CA configuration.

V7.E4.4.3.2.1.1. A "low" determination may only be assigned to those areas for which a search of available historical records and on-site investigation data indicates that, given the military or munitions-related activities that occurred at the site, the likelihood of encountering MEC or CAs, regardless of CA configuration, is low.

V7.E4.4.3.2.1.2. Munitions-related activities that may merit a "low" determination include, but are not limited to, the former use of the area for live-fire training exclusively with small arms ammunition; for maneuver training, to include maneuver training involving the use of smokes, pyrotechnics, and simulators; as firing points; for munitions inspection, handling, storage, or transfers, to include residue points and inert storage yards; for air defense; or as munitions operating facilities. The exceptions are facilities in which the processes used might have resulted in the generation of concentrations of munitions constituents high enough to present an explosive hazard. Areas on which previous responses have been completed may also qualify for "low" determinations.

V7.E4.4.3.2.1.3. Immediate reassessment by the responsible authority of the level of construction support required is appropriate upon the discovery of MEC or CAs, regardless of CA configuration.

V7.E4.4.3.2.2. Moderate to High Probability. "On-site" construction support should be provided to remove explosive or CA hazards in the construction footprint, in accordance with a DDESB-approved ESS or CSS, before intrusive construction or other intrusive activities occur. When the depth of intrusive activities exceeds the detection limits of the detection equipment used, soil should be removed in layers to allow detection and removal of MEC or CAs, regardless of CA configuration, in the construction footprint.

V7.E4.4.3.2.2.1. A "moderate to high" determination may be assigned to those areas for which a search of available historical records or on-site investigation data indicates that, given the military or munitions-related activities that occurred at the site, there is more than a low probability that MEC or CAs are present.

V7.E4.4.3.2.2.2. Munitions-related activities that may merit a "moderate to high" determination include, but are not limited to, the former use of the area for live-fire training other than exclusively with small arms ammunition; as operational range impact areas; for OB or OD of munitions; as munitions operating facilities where processes used might have resulted in the generation of concentrations of munitions constituents high enough to present an explosive hazard; for munitions burial; or for any activities involving CAs.

V7.E4.4.4. Anomaly Avoidance

V7.E4.4.4.1. The use of anomaly avoidance techniques is appropriate on properties known or suspected to contain UXO or other munitions that may have experienced abnormal environments to allow the activities in paragraphs **V7.E4.4.4.1.1.** and **V7.E4.4.4.1.2.** in such areas while avoiding surface explosive or CA hazards and, when necessary, subsurface anomalies. Anomaly avoidance is used when:

V7.E4.4.4.1.1. Surface MEC or CAs, regardless of CA configuration, will be avoided during any activities that require entry to the area (e.g., collections of environmental samples, the conduct of cultural resource studies).

V7.E4.4.4.1.2. Subsurface anomalies will be avoided during any intrusive work (e.g., drilling environmental monitoring wells).

V7.E4.4.4.2. During anomaly avoidance:

V7.E4.4.4.2.1. Escort support must be provided by EOD personnel, or:

V7.E4.4.4.2.1.1. Within areas known or suspected to contain MEC, excluding CAs, regardless of configuration, by:

V7.E4.4.4.2.1.1.1. UXO-qualified personnel.

V7.E4.4.4.2.1.1.2. UXO Technician I personnel under the supervision of UXO-qualified personnel. The responsible commander or authority may approve UXO Technician I personnel to perform escort duties without supervision based on a risk assessment and implementation of methods to mitigate any potential exposures.

V7.E4.4.4.2.1.2. Within areas known or suspected to contain CAs, regardless of configuration, to include areas where such CA is commingled with other MEC, by UXO-qualified personnel trained in CWM responses.

V7.E4.4.4.2.2. Explosives safety requires that discovered surface MEC or CAs, regardless of CA configuration, be avoided and their location noted and reported to appropriate authorities.

V7.E4.4.4.2.3. Detected subsurface anomalies must not be investigated, but they will be marked, when appropriate, and avoided.

V7.E4.4.5. Frost Heave. The three conditions necessary for frost heave to occur are freezing temperatures are present in the soil column; the soil is frost susceptible; and there is sufficient moisture present in the soil to cause soil movement upon ice crystal formation. These three factors will be evaluated to assess the likelihood of frost heave moving residual MEC or CAs, regardless of CA configuration, upward through the soil column. Where frost heave may have such an effect, explosives safety requires procedures be implemented to monitor the effectiveness of response actions for the affected area. Other naturally occurring phenomena (e.g., erosion, tidal changes) could necessitate similar monitoring.

V7.E4.4.6. Soil Containing CAs

V7.E4.4.6.1. The criteria in paragraphs **V7.E4.4.6.3.** through **V7.E4.4.6.7.** apply to soil known to be contaminated with one or more of the following CAs: mustard, dichloro (2-chlorovinyl) arsine (common name is Lewisite) (L), pinacolyl methylphosphonofluoridate (common name is soman) (GD), dimethylaminoethoxy-cyanophosphine oxide (common name is tabun) (GA)/isopropyl methylphosphonofluoridate (common name is sarin) (GB), o-cyclohexyl methylphosphonofluoridate (GF) (common name is cylcosarin), or 0-ethyl S-[2-(diisopropylamino) ethyl] methylphosphonothioate (VX). These criteria apply only if a headspace measurement is at or above the short-term exposure limits (STELs) (as identified in paragraph **V7.E4.4.6.4.1.**) or a laboratory extraction sample is at or above the hazardous waste control limit (HWCL) for solid materials: mustard, L, GD, GA/GB, GF, or VX. Certain CA-related operations, such as taking core samples at a suspect CWM or CA burial site, require laboratory extraction sampling.

V7.E4.4.6.2. Soil for which no evidence exists of CA contamination does not require treatment or remediation.

V7.E4.4.6.3. An appendix to the site's safety and health plan that addresses the procedures (e.g., personnel protection, monitoring, sampling, packaging, and disposal) for the handling and disposition of CA-contaminated soil is required for environmental responses to soil known or suspected to be contaminated with CAs.

V7.E4.4.6.4. Air-sampling methods will be used to detect CAs during CWM responses. When soil contaminated with CAs is encountered and an air concentration is at or above the STEL based on off-gas monitoring of the headspace of a container or of air in the immediate area of the operation, appropriate personnel protective measures must be employed and the CA-contaminated soil must be decontaminated to below the HWCL levels of paragraph **V7.E4.4.6.4.2.** unless the CA-contaminated soil may be shipped in accordance with DOT regulations and approvals and a receiving Treatment Storage Disposal Facility is qualified to process the CA-contaminated soil in accordance with federal, State, interstate, and local laws and

regulations. If air monitoring is below the STEL, soil samples will be taken to determine if the soil exceeds the HWCL.

V7.E4.4.6.4.1. The STELs for air sampling CA contamination are:

V7.E4.4.6.4.1.1. 0.003 milligrams per cubic meter (mg/m^3) for mustard agent (2,2' dich1orodiethyl sulfide (common name is distilled mustard) (H/HD) or 60 percent H/HD and 40 percent 2,2' dichloroethylthiodiethyl ether (common name is mustard-T mixture) (H/HT)).

V7.E4.4.6.4.1.2. 0.003 mg/m^3 for L.

V7.E4.4.6.4.1.3. 0.0002 mg/m^3 for GD/GF.

V7.E4.4.6.4.1.4. 0.0001 mg/m^3 for GA/GB.

V7.E4.4.6.4.1.5. 0.00001 mg/m^3 for VX.

V7.E4.4.6.4.2. When soil contaminated with CAs is encountered at or above the HWCL levels listed in Table **V7.E4.T1.** as determined by laboratory extraction and analysis of soil samples, the CA-contaminated soil must be decontaminated to below the levels listed for the HWCL, or to a level required by federal, State, interstate, and local laws and regulations.

Table V7.E4.T1. HWCLs

Standard Name	Population	Exposure Scenario	CA Per Soil Mass (mg/kg)					
			GD/ GF	GA	GB	VX	H/HD & H/HT	L
HWCL	Worker (Civilian/DoD)	Possible occasional exposure at hazardous waste treatment facility	52	680	320	10	6.7	37

V7.E4.4.6.5. Once decontaminated to the appropriate level, the CA-contaminated waste must be packaged in a DOT-approved shipping container and shipped to an approved, licensed treatment or disposal facility in accordance with federal, State, and local laws and regulations. Records of disposition must be maintained by the generator in accordance with federal, State, interstate, and local laws and regulations.

V7.E4.4.6.6. Soil that is found to be below the HWCL, but above the levels of paragraph **V7.E4.4.6.7.**, must be disposed of as hazardous waste in accordance with federal, State, interstate, and local laws and regulations or treated by an approved, licensed treatment or disposal facility to the levels of paragraph **V7.E4.4.6.7.**

V7.E4.4.6.7. Soil that is at or below the health-based environmental screening levels (HBESLs) for residential or industrial soil listed in Table **V7.E4.T2.**, as appropriate, may be used or disposed of in accordance with federal, State, interstate, and local laws and regulations (e.g., returned to the hole or disposed of as non-contaminated, non-hazardous material).

Table V7.E4.T2. HBESLs

Standard Name	Population	Exposure Scenario	CA Per Soil Mass (mg/kg)					
			GD/ GF	GA	GB	VX	H/HD & H/HT	L
HBESL - Residential	General Population (adults and children)	Daily Exposure (lifetime)	0.22	2.8	1.3	0.042	0.01	0.3
HBESL - Industrial	General Adult Population	Frequent Exposures (250 days per year for 30 years)	5.2	68	32	1.1	0.3	3.7

V7.E4.5. REQUIRED SAFETY SUBMISSIONS (ESS, CSS, AND EXPLOSIVES OR CWM SITE PLANS)

V7.E4.5. **(Added)(AF)** Submit plans for leasing, transferring, or disposing of USAF real property (see AFI 32-9004) when AE are present, or are suspected to be present, through command safety channels to AFSEC/SEW, and in turn to AFCEC/CZR, for submission to the DDESB for review and approval.

V7.E4.5.1. Requirements. Explosives and CA safety requires:

V7.E4.5.1.1. A DDESB-approved site plan, ESS, or CSS before the start of munitions response activities (e.g., field activities) that involve the placement of explosives on a site; the intentional physical contact with MEC or CAs, regardless of CA configuration; or the conduct of ground-disturbing or other intrusive activities in areas known or suspected to contain MEC or CAs, regardless of CA configuration; or

V7.E4.5.1.2. A Service-level explosives safety office review and approval pending DDESB review and approval of the submission, provided the submission is at the DDESB for review and approval and the Service accepts that the DDESB approval may impose different or additional munitions or CWM response requirements.

V7.E4.5.2. DDESB Approval Required. A DDESB-approved ESS or CSS, or an explosives or CWM site plan, or a combination thereof, is required for:

V7.E4.5.2.1. MRS investigation or characterization (e.g., Engineering Evaluation/Cost Analysis or Remedial Investigation/Feasibility Study) that involves the intentional physical contact with MEC or CAs, regardless of CA configuration (see paragraph **V7.E4.5.4.** for site plan requirements).

V7.E4.5.2.2. A determination of "no DoD action indicated" (NDAI) or "no further action" (NOFA) (see paragraph **V7.E4.5.5.** for site plan requirements).

V7.E4.5.2.3. Time critical removal action (TCRA) (see paragraph **V7.E4.5.6.** for site plan requirements).

V7.E4.5.2.4. Construction support (see paragraph **V7.E4.5.7.** for site plan requirements).

V7.E4.5.2.5. Execution of the explosives safety or CA safety aspects of the selected response (see paragraphs **V7.E4.5.8.** and **V7.E4.5.9.** for site plan requirements).

V7.E4.5.3. DDESB Approval Not Required. A DDESB-approved ESS or CSS, or an explosives or CWM site plan is not required for:

V7.E4.5.3.1. Munitions or explosives emergency responses.

V7.E4.5.3.2. Preliminary assessments or site inspections (e.g., site visits in conjunction with an archival search) when intentional physical contact with MEC or CAs, regardless of CA configuration, or the conduct of ground-disturbing or other intrusive activities are not intended.

V7.E4.5.3.3. Clearance activities on operational ranges. (Addressing military munitions burial sites on operational ranges is not a clearance activity.)

V7.E4.5.3.4. Munitions responses on former ranges used exclusively for training with small arms ammunition.

V7.E4.5.3.5. On-call construction support.

V7.E4.5.3.6. Anomaly avoidance activities.

V7.E4.5.4. MRS Investigation or Characterization. An explosives or, when appropriate, a CWM site plan is required for MRS investigations or characterizations that involve intentional physical contact with MEC or CAs, regardless of CA configuration. Such site plans will address areas (e.g., magazines) used for the storage of commercial or military demolition explosives, MEC or CAs, regardless of CA configuration; planned or established demolition or disposal areas; and the MRA, MRS, or response area boundaries. (See paragraph **V7.E4.5.8.3.7.** for mapping requirements.) MRS investigation and characterization are used to collect the information needed to design the required munitions response and to prepare, as appropriate, an ESS or CSS for the selected response.

V7.E4.5.5. NDAI or NOFA ESS or CSS. When an NDAI or NOFA decision is made for an MRA or MRS or for a response area, an ESS or CSS must, at a minimum, provide:

V7.E4.5.5.1. The site identification (e.g., name, unique identifier).

V7.E4.5.5.2. The site location.

V7.E4.5.5.3. Justification for the decision.

V7.E4.5.5.4. **(Added)(AF)** Air Force personnel will utilize Table **V7.E4.T3.**, NDAI munitions response explosives safety submission (MRESS) Review Elements, for providing required information. **(T-1).**

Table V7.E4.T3. (Added)(AF) NDAI MRESS Review Elements.

MRESS REVIEW REQUIREMENTS	***BASE/SITE***		
	UNIT	**MAJCOM**	**COMMENTS**
1. BACKGROUND			
Verify:			
- site location, description, and history			
- current and future land use			
2. MAPS			
Ensure submission contains:			
- installation and MRA/MRS location map			
- MRA/MRS map			
3. JUSTIFICATION FOR THE DECISION			
Verify:			
- justification is adequate for the NDAI MRESS decision			
4. CONTINGENCIES			
Verify:			
- alternative actions to reduce the need to submit future amendments, if desired, are outlined			
5. REFERENCES			
- self-explanatory			

V7.E4.5.6. TCRA ESS or CSS. To expedite the approval process, the DoD Components are encouraged to submit a TCRA ESS or CSS electronically through their chain of command to the DDESB. A TCRA ESS or CSS must, at a minimum, identify or provide the:

V7.E4.5.6.1. Site identification (e.g., name, unique identifier).

V7.E4.5.6.2. TCRA location.

V7.E4.5.6.3. TCRA purpose in sufficient detail to explain the reason the TCRA was authorized.

V7.E4.5.6.4. Estimated date that the TCRA will be:

V7.E4.5.6.4.1. Initiated.

V7.E4.5.6.4.2. Completed.

V7.E4.5.6.5. MGFD.

V7.E4.5.6.6. ESQD maps (see paragraph **V7.E4.5.8.3.7.** for mapping requirements) that show the MSD for:

V7.E4.5.6.6.1. The removal area within an MRA or MRS or within a response area for:

V7.E4.5.6.6.1.1. Unintentional detonations (see paragraph **V7.E4.5.8.3.2.1.** for unintentional detonation MSD).

V7.E4.5.6.6.1.2. Intentional detonations (see paragraph **V7.E4.5.8.3.2.2.** for intentional detonation MSD).

V7.E4.5.6.6.2. Areas or magazines for the storage of demolition explosives, MEC, or CAs, regardless of CA configuration.

V7.E4.5.6.7. Actions and controls to be implemented (e.g., surface removal, evacuation, fences) as part of the TCRA.

V7.E4.5.6.8. DDESB-approved ECs to be used, if any (see DDESB Technical Paper 15 for previously approved ECs).

V7.E4.5.6.9. Point of contact for additional information.

V7.E4.5.7. Construction Support ESS or CSS. A safety submission is required for construction support where the probability of encountering MEC or CAs, regardless of CA configuration, is considered moderately or highly probable. This submission must provide the information outlined in paragraphs **V7.E4.5.8.** and **V7.E4.5.9.**, as appropriate. The information may be tailored based on site-specific conditions.

V7.E4.5.8. Selected Munitions Response ESS. When a CA, regardless of configuration, is known or suspected to be present along with explosive hazards, or when it is explosively configured, a submission that provides both explosives safety (as outlined in paragraphs **V7.E4.5.8.1.** through **V7.E4.5.8.15.**) and CA safety information (as outlined in paragraph **V7.E4.5.9.**) is required for the execution of the selected munitions response to address MEC.

V7.E4.5.8. **(Added)(AF)** In addition to paragraphs **V7.E4.5.8.1.** through **V7.E4.5.8.15.**, utilize Table **V7.E4.T4.** for the required information.

V7.E4.5.8.1. Background. The ESS must provide, for informational purposes, a brief description of the reasons for the munitions response. The ESS must identify or provide:

V7.E4.5.8.1.1. The scope of munitions response activities.

V7.E4.5.8.1.2. Any significant differences in munitions response activities that will occur within the MRA or MRS. The ESS must identify significant differences in the current, determined, or reasonably anticipated future land use of different sections of the property, significant differences in the types or conditions of MEC expected to be encountered, and any sections of the MRA that will not require munitions response activities.

V7.E4.5.8.2. Maps. The following maps and related information must be furnished:

V7.E4.5.8.2.1. Regional Map. A map depicting the regional location of the MRA or MRS (e.g., a State or boundary illustration map with the MRA indicated on it).

V7.E4.5.8.2.2. MRA or MRS Maps. Maps of the area or areas at which the munitions response is planned. These maps and related information must indicate:

V7.E4.5.8.2.2.1. Areas that:

V7.E4.5.8.2.2.1.1. Contain or are suspected of containing MEC that the ESS addresses.

V7.E4.5.8.2.2.1.2. Were suspected of containing MEC, but that research or site characterizations have subsequently shown do not contain such.

V7.E4.5.8.2.2.1.3. The ESS does not address, but that either a previous safety submission addressed or a future safety submission will address.

V7.E4.5.8.2.2.2. The current, determined, or reasonably anticipated future land use of property within the MRA or MRS that is known or suspected to contain MEC that the ESS addresses.

V7.E4.5.8.2.2.3. The ownership and land use of adjacent properties, as appropriate.

V7.E4.5.8.2.2.4. Any other situation that may influence or require consideration during the response (e.g., flight corridors, traffic routes).

V7.E4.5.8.3. ESQD

V7.E4.5.8.3.1. MEC Response-Related Operations Map. The planned locations for MEC response-related operations must be shown on ESQD maps. Preliminary site work, such as surveying, laying search lanes, and detecting anomalies does not require establishment of an ESQD arc.

V7.E4.5.8.3.2. ESQD Maps. ESQD arcs for both intentional and unintentional detonations must be established and shown on ESQD maps for each MRS.

V7.E4.5.8.3.2.1. The MSD for unintentional detonations, which may be reduced by employing the ECs listed in DDESB Technical Paper 15 or other DDESB-approved ECs, for:

V7.E4.5.8.3.2.1.1. Nonessential personnel is the greatest distance of:

V7.E4.5.8.3.2.1.1.1. Blast overpressure distance, as computed by using K40 [K_m 15.87].

V7.E4.5.8.3.2.1.1.2. The calculated HFD as provided in DDESB Technical Paper 16.

V7.E4.5.8.3.2.1.2. Essential personnel is the TSD, based on blast overpressure distance, as computed by using K40 [K_m 15.87].

V7.E4.5.8.3.2.2. The MSD for intentional detonations as described in Enclosure 3 of Volume 5, which may be reduced by employing the ECs listed in DDESB Technical Paper 15 or other DDESB-approved ECs, is the greatest distance of:

V7.E4.5.8.3.2.2.1. Blast overpressure distance, as computed by using K328 [K_m 130.1].

V7.E4.5.8.3.2.2.2. The calculated MFD, as provided in DDESB Technical Paper 16.

V7.E4.5.8.3.3. MEC, Excluding CA-filled Munitions, Hazard Classification, and Storage

V7.E4.5.8.3.3.1. Recovered MEC, other than RCWM, must be managed as HD 1.1, unless assigned differently by an Interim Hazard Classification authority, and assigned an appropriate CG. When storage at the MRA or MRS is necessary, recovered MEC must be stored separately from serviceable munitions and from any RCWM. (For RCWM, see paragraph **V7.E4.5.9.6.**)

V7.E4.5.8.3.3.2. Nonessential personnel in structures must be afforded protection equivalent to IBD from storage locations. Nonessential personnel in the open must be afforded protection equivalent to PTRD from storage locations. (See Volumes **3** and **4** of this manual for IBD and PTRD criteria.) There is no required ESQD protection for essential personnel from locations they are using for storage.

V7.E4.5.8.3.3.3. The IMD, based on the NEWQD of the munition with the greatest NEWQD that is reasonably expected to be encountered, applies from intrusive operations to storage sites to prevent propagation to a storage location in event of an accidental explosion during intrusive operations. For distances less than IMD, DDESB-approved ECs must be used during intrusive operations.

V7.E4.5.8.3.4. Planned or Established Demolition Areas. A planned or established demolition area is an area used repetitively to destroy munitions during a munitions response. Such areas may be an existing OD area or a new area planned for intentional detonation. An

ESQD arc must be provided around demolition areas; its size will be based on the requirements of **Volume 5 – Enclosure 3**.

V7.E4.5.8.3.5. Mechanized MEC Processing Operations, Excluding CA-filled Munitions

V7.E4.5.8.3.5.1. High- and Low-Input Operations. Mechanized MEC processing operations can be classified as either "high-input" or "low-input" based on a risk assessment that considers the degree of energy with which the process would impact any potentially processed MEC.

V7.E4.5.8.3.5.1.1. High-input processing operations (e.g., shredders, crushers) are intended to physically deform material including any MEC being processed and certain excavations depending upon the risk assessment.

V7.E4.5.8.3.5.1.2. Low-input processing operations (e.g., on-site transport, dumping, screening, raking, spreading, sifting, and magnetically separating) are not intended to intentionally deform material including MEC being processed and certain excavations depending upon the risk assessment.

V7.E4.5.8.3.5.2. Personnel Separation Distances

V7.E4.5.8.3.5.2.1. Nonessential Personnel

V7.E4.5.8.3.5.2.1.1. During high-input processing operations, nonessential personnel must be provided protection for intentional detonations based on the MGFD. (See paragraph **V7.E4.5.8.3.2.2.** for intentional detonation criteria.)

V7.E4.5.8.3.5.2.1.2. During low-input processing operations, nonessential personnel must be provided protection for accidental (unintentional) detonations (greater of HFD or K40 [K_m 15.87]).

V7.E4.5.8.3.5.2.2. Essential Personnel. For both high- and low-input processing operations, essential personnel must:

V7.E4.5.8.3.5.2.2.1. Be protected by shields or barricades designed to defeat hazardous fragments from the MGFD.

V7.E4.5.8.3.5.2.2.2. Be separated from the operation by K24 [K_m 9.52] based on the munition with the greatest NEWQD that is reasonably expected to be encountered. DDESB-approved overpressure-mitigating ECs may be used to provide an equivalent level of protection (2.3 psi*) [15.9 kPa]***.**

V7.E4.5.8.3.6. Intentional Burning of Buildings Contaminated with Explosives Residues that Present an Explosive Hazard. All personnel must be separated by K328 [K_m 130.1] overpressure distance based on the MCE for the building, but not less than 1,250 ft [381 m].

V7.E4.5.8.3.7. ESQD Maps. The ESQD arcs and the MRA and MRS boundaries may be shown on the same map provided all PESs and ESs are shown in sufficient detail.

V7.E4.5.8.3.7.1. ESQD maps should be to scale and legible in accordance with paragraph **V1.E5.2.3.3.2.**

V7.E4.5.8.3.7.2. When a map does not contain a scale, all distances must be labeled.

V7.E4.5.8.3.7.3. The ESQD map must show:

V7.E4.5.8.3.7.3.1. Each MRA or MRS.

V7.E4.5.8.3.7.3.2. The storage locations for demolition explosives and for recovered MEC.

V7.E4.5.8.3.7.3.3. Locations (planned or established) for the intentional detonations or burning of MEC, excluding CA-filled munitions. Such locations include areas where contained detonation technology will be used.

V7.E4.5.8.3.7.3.4. All ESs and PESs and their relationships. Describe any protective measures (e.g., evacuation of inhabited buildings, blocking off public highways) that will be used to eliminate or minimize any exposures within the established exclusion zone.

V7.E4.5.8.3.7.3.5. All controlling ESQD arcs.

V7.E4.5.8.3.7.4. ESQD arcs must be shown for:

V7.E4.5.8.3.7.4.1. Munitions. The MGFD must be used for ESQD purposes for any particular MRA or MRS. However, if a munition with a greater fragmentation distance is encountered during the conduct of a munitions response, the ESQD arcs must be adjusted and the ESS or explosives safety site plan must be amended.

V7.E4.5.8.3.7.4.2. Explosive Soil

V7.E4.5.8.3.7.4.2.1. To determine the ESQD arc for explosive soil, calculate the MCE by multiplying the weight of the mix by the concentration of explosives (e.g., 1,000 lbs [453.60 kg] of soil containing 15 percent TNT has an MCE of 150 lbs [68 kg]). When concentrations vary within the site, weighted averages or other valid mathematical technique can be used to determine the exclusion zone; however, the ESS must support their use.

V7.E4.5.8.3.7.4.2.2. The MSD for nonessential personnel is the greater of IBD for overpressure or the soil ejecta radius in accordance with the Buried Explosion Module contained in DDESB Technical Paper 16 or other DDESB-approved procedures (such as those identified in DDESB Technical Paper 15).

V7.E4.5.8.3.7.4.3. Real Property (Buildings and Installed Equipment). For real property that is known or suspected to be contaminated with explosives residues that present an explosive hazard, and that is slated for cleanup or dismantlement, the MCE will be estimated on a case-by-case basis. The ESS will include the rationale used for the estimation.

V7.E4.5.8.3.8. Soil Sampling Maps. When the property involves concentrations of explosives in the soil that are high enough to present an explosive hazard (as described in paragraph **V7.E4.4.1.**):

V7.E4.5.8.3.8.1. Provide a map that indicates areas that were determined to contain explosive soil.

V7.E4.5.8.3.8.2. Address methods (e.g., blending, bio-remediation) to be used to reduce explosives concentrations to a non-reactive level.

V7.E4.5.8.3.8.3. Address methods (e.g., wetting the soil before blending) to be used to reduce any explosive hazards.

V7.E4.5.8.4. Types of MEC. Based on research or data generated from characterization of the MRA or MRS, provide the types of MEC expected to be encountered during munitions response activities.

V7.E4.5.8.5. Start Date. Provide the expected date that munitions response activities that involve the placement of explosives on a site, the intentional physical contact with MEC, or the conduct of ground-disturbing or intrusive activities in areas known or suspected to contain MEC are scheduled to start. Indicate the potential consequence, if any, if DDESB approval does not occur by the start date. Site preparation activities (e.g., surveying, gridding, or locating anomalies) may be conducted while awaiting DDESB approval of an ESS.

V7.E4.5.8.6. MEC Migration. Describe naturally occurring phenomena (e.g., drought, flooding, erosion, frost heave, tidal changes) that could cause the migration or exposure of MEC, and procedures for monitoring and managing such.

V7.E4.5.8.7. Detection Equipment and Response Techniques. The intent of the following requirements is to describe the capabilities of detection equipment relative to the degree of removal required to support the current, determined, or reasonably anticipated end use.

V7.E4.5.8.7.1. Describe the techniques to be used to detect and remove MEC.

V7.E4.5.8.7.2. Identify the types of detection equipment to be used and the areas in which they will be employed.

V7.E4.5.8.7.3. Summarize methods used (e.g., test plots) to establish the expected detection capabilities of the equipment used. If anomaly discrimination will be used, explain what methods will be used to establish the expected accuracy of the discrimination.

V7.E4.5.8.7.4. When describing the detection methods:

V7.E4.5.8.7.4.1. Describe the rationale (e.g., best available technology based on geology, topography, munitions characteristics, resource requirements) used to select the detection methods and technologies to be used during the response.

V7.E4.5.8.7.4.2. Address any limitations (e.g., equipment, terrain, soil type) and mitigating actions, if any.

V7.E4.5.8.7.4.3. Describe quality assurance and quality control (QA/QC) standards and pass or fail criteria for QA/QC audits.

V7.E4.5.8.8. Disposition Techniques

V7.E4.5.8.8.1. MEC, Excluding CA-filled Munitions

V7.E4.5.8.8.1.1. Briefly, describe the MEC, excluding CA-filled munitions, disposition techniques (e.g., OB, OD, contained detonation, incineration) to be used.

V7.E4.5.8.8.1.2. When recovered MEC, excluding CA-filled munitions, cannot be destroyed within the MRA or MRS, address how explosives safety requirements will be met during transportation and during off-site storage, treatment, or disposal. Disposition actions should consider requirements applicable to waste military munitions.

V7.E4.5.8.8.2. MPPEH. Describe the process to be used to manage MPPEH (see Enclosure **6** of this volume for MPPEH criteria).

V7.E4.5.8.9. Environmental, Ecological, Cultural and Other Considerations. Address any environmental, ecological (e.g., endangered species), cultural (e.g., tribal spiritual or gathering sites) and other factors that impacted, from an explosives safety perspective, the selection of the munitions response.

V7.E4.5.8.10. Technical Support. Summarize EOD, U.S. Army Forces Command/20th Support Command/22nd Chemical Battalion, or UXO-technician or UXO-qualified personnel support that may be required. U.S. Army Forces Command/20th Support Command/ 22nd Chemical Battalion is manned with specially trained personnel that provide verification, sampling, detection, mitigation, render safe, decontamination, packaging, escort, and remediation of chemical, biological and industrial devices or hazardous materials.

V7.E4.5.8.11. Residual Risk Management. Address:

V7.E4.5.8.11.1. LUCs. The ESS must summarize any LUCs to be implemented and maintained on the property.

V7.E4.5.8.11.2. Long-term Management. The ESS must address how any potential residual risks will be managed.

V7.E4.5.8.12. Safety Education Program. Address methods to be used to educate the public on the risks associated with MEC and CAs, regardless of CA configuration.

V7.E4.5.8.13. Stakeholder Involvement. Briefly, summarize how stakeholder concerns affecting the explosives safety aspects of the selected munitions response were addressed.

V7.E4.5.8.14. Contingencies. To reduce the need to submit amendments (as described in paragraph **V7.E4.6.1.**), an ESS may describe alternative actions that could be used to address contingencies. As an example, an ESS may list alternative DDESB-approved ECs (such as those described in DDESB Technical Paper 15) that may be used under specified conditions.

V7.E4.5.8.15. Unexpected CA Discoveries. Should a CA, regardless of its configuration, be discovered during munitions responses to MEC, excluding CA-filled munitions, all on-site activities must be halted until the need for a CWM response is evaluated and a decision is approved by the Service-level explosives safety office. If it is decided that a CWM response is necessary, the following must not begin until the required CSS or CWM site plan is approved by the DDESB:

V7.E4.5.8.15.1. Response actions that involve intentional physical contact with a CA, regardless of configuration.

V7.E4.5.8.15.2. Ground-disturbing or other intrusive activities in areas known or suspected to contain CAs.

Table V7.E4.T4. (Added)(AF) MRESS Review Requirements.

MRESS REVIEW REQUIREMENTS	***BASE/SITE***		
	UNIT	**MAJCOM**	**COMMENTS**
1. BACKGROUND			
Verify:			
- reason for munitions response			
- purpose of the MRESS			
- project scope or range of actions			
- significant differences or absence of munitions response activities within MRA or MRS are described			
2. MAPS			
Ensure submission contains:			
- regional map of MRA or MRS			
- map of munitions response area or areas			
- map with ESQD arcs for HFD and MFR-H for unintentional and intentional detonations of MGFD			

Table V7.E4.T4. (Added)(AF) MRESS Review Requirements, Continued.

- map with ESQD arc for planned or established demolition area			
3. ESQD for MGFD			
Verify:			
- selection MGFD			
- explanation of demolition requirements to include BIP, consolidated shots, and collection points			
- maximum NEW is requested if consolidated shots are planned			
- EMM explosives safety distances are provided with required shielding and 9-decibel protection			
4. TYPES OF MEC			
Verify:			
- explanation of types of MEC expected to encounter			
5. START DATE			
- self explanatory			
6. MEC MIGRATION			
- description of existing naturally occurring phenomena that could cause migration or exposure of MEC			
- procedure for monitoring or managing migration of MEC is provided			
7. DETECTION EQUIPMENT AND RESPONSE TECHNIQUES			
Verify:			
- techniques for detection and removal of MEC are outlined			
- types of detection equipment and areas of use are explained			
- methods to establish expected detection capabilities are addressed, to include rationale for use and limitations of detection methods			
- exclusion zone procedures are described			
- QA/QC standards are described			
8. DISPOSITION TECHNIQUES			
Verify:			
- planned engineering controls are adequately described			
- disposition techniques (e.g., OB, OD, BIP, consolidated shots, incineration), if not previously explained, are described			
- scrap determination and disposition procedures are covered			
9. ENVIRONMENTAL, ECOLOGICAL, CULTURAL, AND OTHER CONSIDERATIONS			
Verify:			

Table V7.E4.T4. (Added)(AF) MRESS Review Requirements, Continued.

- environmental, ecological, and cultural factors that impact the selected munitions response are addressed			
10. TECHNICAL SUPPORT			
Verify:			
- any required UXO-technician or EOD support is provided			
11. RESIDUAL RISK MANAGEMENT			
Verify:			
- LUCs to be maintained or implemented are listed			
- any long-term management requirements are summarized			
12. SAFETY EDUCATION PROGRAM			
Verify:			
- methods used to educate the public about MEC risks are addressed			
13. STAKEHOLDER MANAGEMENT			
Verify:			
- stakeholder concerns are addressed			
14. CONTINGENCIES			
Verify:			
- alternative actions to reduce the need to submit future amendments, if desired, are outlined			
15. REFERENCES			
- self explanatory			

Note: **(Added)(AF)**

1. **(Added)(AF)** Italicized items may or may not be required based on the munitions response.

V7.E4.5.9. Selected CWM Response CSS and CWM Site Plans

V7.E4.5.9.1. General

V7.E4.5.9.1.1. A response in an area (e.g., a munitions response in an MRA or MRS) that is known or suspected to contain CAs, regardless of configuration, must include a CWM site plan for an interim holding facility (IHF) and, when the use of on-site destruction technology is planned, for the site at which those destruction activities will occur. Generally, the information required in a CSS parallels that for an ESS (see paragraph **V7.E4.5.8.** for ESS requirements); however, such information will be tailored to address CWM.

V7.E4.5.9.1.2. A CSS is not required for certain activities on a site with a history of CA-related activities when an installation or district commander, or a command-designated representative, has approved a probability assessment finding for such activities stating that the probability of discovering CAs is expected to be “seldom” or “unlikely.” However, the site safety and health plan must include contingency plans providing for the safe and expeditious evacuation of the site in the event a CA is discovered.

V7.E4.5.9.1.2.1. Should CAs, regardless of configuration, be discovered during these activities, all on-site activities must be halted until the need for a CWM response is evaluated and a decision is approved by the Service-level explosives safety office.

V7.E4.5.9.1.2.2. If it is decided that a CWM response is necessary, response actions that involve the intentional physical contact with a CA, regardless of configuration, or the conduct of ground-disturbing or other intrusive activities in areas known or suspected to contain CAs must not begin until the required CSS or CWM site plan is approved by the DDESB.

V7.E4.5.9.2. Explosives Hazards. When explosives hazards are known or suspected to exist along with CA hazards within a response area (e.g., the MRA or MRS), a submission that addresses both explosives safety (see paragraph **V7.E4.5.8.** for ESS requirements) and CA safety (as outlined in paragraphs **V7.E4.5.9.3.** through **V7.E4.5.9.15.**) is required.

V7.E4.5.9.3. Background. See paragraph **V7.E4.5.8.1.** for background information requirements for the submission.

V7.E4.5.9.4. Maps. The maps provided with a CSS must meet the requirements of paragraph **V7.E4.5.8.2.** In addition, the 1 percent lethality distance and the IBD must be shown.

V7.E4.5.9.5. CA Hazards. When CA hazards are known or suspected to exist within a response area (e.g., the MRA or MRS), the CA downwind hazard must be considered when determining the MSD. The CSS must provide:

V7.E4.5.9.5.1. A description of the CA MCE.

V7.E4.5.9.5.2. A description of how essential and nonessential personnel and the public will be protected should the CA MCE occur (see **Volume 6 – Enclosure 4** for basic personnel protection requirements (e.g., hazard zones and protective equipment) for operations involving CWM). If an EC, which has not been DDESB-approved, is to be used to provide such protection, the CSS must include the technical data substantiating the new EC's effectiveness. ECs may be used for:

V7.E4.5.9.5.2.1. Protection from overpressure and fragments when explosively configured CWM are known or suspected.

V7.E4.5.9.5.2.2. Protection from CA effects (prevent vapor releases to the environment) during both response activities and when RCWM is stored in the IHF.

V7.E4.5.9.6. RCWM Hazard Classification and Storage

V7.E4.5.9.6.1. RCWM, suspected or confirmed, regardless of its configuration, must be stored separately from serviceable munitions and from other MEC. Additionally, suspect RCWM must be stored separately from all other munitions and from RCWM.

V7.E4.5.9.6.2. Suspect and known RCWM must be managed as HD 1.1 until stowed in an approved overpack container or until determined not to be RCWM (see paragraph

V7.E4.5.8.3.3. for storage criteria) or to be non-explosively configured RCWM (see paragraph **V7.E4.5.9.6.4.** for storage criteria). The CA downwind hazard must be considered, with the greater of the two distances used for siting purposes.

V7.E4.5.9.6.3. Explosively configured RCWM in an approved overpack container must be managed as HD 1.2.1 with an explosive MCE of one round or HD 1.2.2, based on its NEWQD. Such storage may be considered HD 1.1 if advantageous for computing HFD using DDESB-approved procedures, as described in DDESB Technical Paper 16. The CA downwind hazard must be considered, with the longer of the two distances used for siting purposes.

V7.E4.5.9.6.4. Non-explosively configured RCWM must be managed as HD 6.1. The CA downwind hazard must be used for siting purposes.

V7.E4.5.9.7. CWM Site Plan. A DDESB-approved CWM site plan for an IHF is required when a CA, regardless of configuration, is known or suspected to exist on a response area. The IHF site plan, which is based on the worst-case CA configuration expected to be encountered, is included in the CSS. The IHF site plan must:

V7.E4.5.9.7.1. Identify the PAED.

V7.E4.5.9.7.2. Identify all associated ESQD arcs in accordance with paragraph **V7.E4.5.8.3.**

V7.E4.5.9.7.3. Address the evacuation procedures for personnel within the PAED.

V7.E4.5.9.7.4. Address any security measures and access controls for the IHF.

V7.E4.5.9.7.5. Address any EC that will be used to mitigate a CA release during IHF activities, such as:

V7.E4.5.9.7.5.1. Static storage within the IHF.

V7.E4.5.9.7.5.2. RCWM assessment activities (e.g., X-ray, portable isotopic neutron spectroscopy).

V7.E4.5.9.7.5.3. Transportation preparation activities (e.g., transloading of multiple round containers (MRCs), MRC movement into or out of the IHF).

V7.E4.5.9.7.6. Address soil sampling maps. See paragraph **V7.E4.5.8.3.8.** for submission requirements.

V7.E4.5.9.7.7. Address types of CAs. See paragraph **V7.E4.5.8.4.** for submission requirements.

V7.E4.5.9.7.8. Address start date. See paragraph **V7.E4.5.8.5.** for submission requirements.

V7.E4.5.9.8. Detection Equipment and Response Techniques. See paragraph **V7.E4.5.8.7.** for submission requirements.

V7.E4.5.9.9. Disposition Techniques

V7.E4.5.9.9.1. CA, Regardless of Configuration

V7.E4.5.9.9.1.1. Briefly, describe the disposition techniques (e.g., on-site destruction) to be used.

V7.E4.5.9.9.1.2. When RCWM cannot be destroyed on-site, address how CA safety and, if applicable, explosives safety requirements will be met during transportation and off-site storage, treatment, or disposal. Disposition actions should consider guidance applicable to waste military munitions.

V7.E4.5.9.9.2. MPPEH. Describe the process to be used to manage MPPEH. See Enclosure 6 of this volume for MPPEH criteria.)

V7.E4.5.9.10. Environmental, Ecological, Cultural, and Other Considerations. See paragraph **V7.E4.5.8.9.** for submission requirements.

V7.E4.5.9.11. Technical Support. See paragraph **V7.E4.5.8.10.** for submission requirements.

V7.E4.5.9.12. Residual Risk Management. See paragraph **V7.E4.5.8.11.** for submission requirements.

V7.E4.5.9.13. Safety Education Program. See paragraph **V7.E4.5.8.12.** for submission requirements.

V7.E4.5.9.14. Contingencies. See paragraph **V7.E4.5.8.14.** for submission requirements.)

V7.E4.5.9.15. Unexpected MEC or Explosively Configured CWM Discoveries. Should unexpected MEC or explosively configured CWM be discovered during a CWM response, all on-site activities that involve intentional physical contact with such MEC or explosively configured CWM, or the conduct of ground-disturbing or other intrusive activities in areas known or suspected to contain such MEC or explosively configured CWM, must stop until the newly identified explosive hazards are evaluated and the DDESB approves all required CSS amendments or explosives site plans.

V7.E4.6. AMENDMENTS AND CORRECTIONS. An amendment or correction to an approved ESS or CSS does not require the resubmission of the complete ESS or CSS package. However, the information submitted must be in sufficient detail to identify the specific ESS or

CSS being amended or corrected, the affected portions, and the precise amendments or corrections.

V7.E4.6.1. Amendments. Amendments are only required when a change to an approved ESS or CSS increases explosives safety or CA risks, identifies requirements for additional or increased explosive or CA hazard controls, or increases or decreases an ESQD arc.

V7.E4.6.1.1. An amendment requires DDESB approval before the affected response actions can continue. However, response actions need not be stopped pending such approval, provided that:

V7.E4.6.1.1.1. The amendment relates to an area (e.g., MRA or MRS) for which an ESS or CSS has already been approved; and

V7.E4.6.1.1.2. The DoD Component:

V7.E4.6.1.1.2. **(Added)(AF)** The MAJCOM, in coordination with AFSEC/SEW:

V7.E4.6.1.1.2.1. Implements protective measures (e.g., increased ESQD, use of DDESB-approved EC) to address any explosive or CA hazards.

V7.E4.6.1.1.2.2. Accepts the possibility that the DDESB approval process may impose different or additional explosives safety or CA safety requirements.

V7.E4.6.1.2. If the amendment is for a new response area (e.g., a new MRS), then the DDESB must approve the amendment before intrusive activities begin in the new response area.

V7.E4.6.1.3. To allow the response to continue with minimal interruption, amendments should be processed by electronic means.

V7.E4.6.1.4. Changes that require an amendment include:

V7.E4.6.1.4.1. Constraints in funding, technology, access, and other site-specific conditions that impact the degree of removal addressed in the approved ESS or CSS.

V7.E4.6.1.4.2. Any increase or decrease of the ESQD arcs.

V7.E4.6.1.4.3. A change in operations requiring explosives siting or re-siting of an IHF for CWM.

V7.E4.6.1.4.4. Changes in LUCs or long-term management to address residual risks. Such changes would not require intrusive activities to stop while the amendment is being processed.

V7.E4.6.2. Corrections

V7.E4.6.2.1. Address changes to an approved ESS or CSS that do not increase explosives safety or CA risks or exposures.

V7.E4.6.2.2. Do not require approval.

V7.E4.6.2.3. Are primarily administrative in nature and provided for information purposes.

V7.E4.7. AAR

V7.E4.7.1. An AAR for completed munitions or CWM responses is a required feature of all DDESB-approved ESSs or CSSs. The AAR's purpose is to document that the explosives and chemical safety aspects of the selected response have been completed in accordance with the approved ESS or CSS. In most cases, a "Statement of MEC Removal" or "Statement of Munitions Response MEC Removal Actions" fulfills the requirements in paragraphs **V7.E4.7.2.4.** through **V7.E4.7.2.8.** The DDESB staff must acknowledge receipt of an AAR, and raise any issues that require resolution before land transfer or an alternative use can safely proceed.

V7.E4.7.2. The AAR:

V7.E4.7.2.1. Must be submitted to the DDESB through the responsible DoD Component.

V7.E4.7.2.2. May be submitted electronically.

V7.E4.7.2.3. Will remain part of the DDESB's action file; however, the DoD Components continue to be responsible for complying with all recordkeeping requirements.

V7.E4.7.2.4. Must summarize the MEC or CAs, regardless of CA configuration, found.

V7.E4.7.2.5. Must describe the relative effectiveness and any limitations of the technologies used during the munitions response or CWM response and the effects on residual risk relative to that originally projected.

V7.E4.7.2.6. Must include maps showing:

V7.E4.7.2.6.1. Areas from which MEC or CAs, regardless of CA configuration, were removed.

V7.E4.7.2.6.2. Areas within a response area (e.g., within an MRA or MRS) where response actions were not performed and the rationale for not addressing those areas.

V7.E4.7.2.6.3. The known or reasonably anticipated end use of each area.

V7.E4.7.2.7. Must summarize the LUCs that were implemented, if any, and the areas to which they apply.

V7.E4.7.2.8. Must address provisions for long-term management.

V7.E4.8. TRANSFER OF REAL PROPERTY OUTSIDE OF DoD CONTROL. Pursuant to DoDI 4165.72, real property known to contain or suspected of containing explosive or CA hazards may not be transferred out of DoD control (other than to the U.S. Coast Guard) until the Executive Director, DDESB, has approved measures submitted by the transferring Component. These measures must ensure the recipient of the property is fully informed of both the actual and potential hazards relating to the presence or possible presence of explosives or CAs, and restrictions or conditions placed on the use of the property to avoid harm to users due to the presence of explosives or CAs.

V7.E4.8. **(Added)(AF)** AFI 32-9004 addresses contaminated real property. Coordinate activities associated with the disposal of contaminated real property with the installation Real Property Accountable Officer. Whenever disposal is contemplated, conduct an Environmental Baseline Survey to identify any hazardous conditions associated with the subject property, including UXO and other hazardous materials. **(T-1).**

V7.E4.8.1. Notices. A recipient of such DoD property must be provided:

V7.E4.8.1.1. Details of any past removal or remedial actions, including:

V7.E4.8.1.1.1. The degree of MEC or CA removal.

V7.E4.8.1.1.2. The process used to determine that degree of removal to be adequately protective.

V7.E4.8.1.2. Written notification that detection and removal methods are not 100 percent effective, and that residual hazards may remain in areas (e.g., MRS) that were subjected to response actions.

V7.E4.8.2. Restrictions and Conditions. Based on potential explosive and CA hazards present and the projected use of the property, the following types of use restrictions and conditions must be imposed, as appropriate, on such DoD property:

V7.E4.8.2.1. A prohibition on excavation or drilling in any areas known or suspected to contain MEC or CAs, regardless of CA configuration, without appropriate permits or assistance.

V7.E4.8.2.2. A prohibition on disturbing, removing, or destroying any found MEC or CAs, regardless of CA configuration.

V7.E4.8.2.3. A requirement to immediately notify local law enforcement representatives of any discovery of MEC or CAs, regardless of configuration.

V7.E4.8.2.4. A prohibition on the construction or installation of particular improvements including utilities, roadways, airstrips, navigable waterways, pipelines, and structures, both above and below ground.

V7.E4.8.2.5. A prohibition on specific alterations, extensions, or expansions to such improvements.

V7.E4.8.2.6. A prohibition on certain types of uses, such as childcare centers, housing, or farming.

V7.E4.8.2.7. A restriction to a specific type of use or owner, such as a State National Guard range.

V7.E4.8.2.8. Inclusion of the DoD Component explosives and CA safety personnel and the Executive Director, DDESB, in deliberations, decision making, and approvals pertaining to future munitions response activities to address MEC or CAs, regardless of CA configuration.

V7.E4.8.2.9. Inclusion of the restrictions and conditions in the recorded land records for the jurisdiction, to the extent allowed by State law.

VOLUME 7 – ENCLOSURE 5: SPECIAL STORAGE PROCEDURES FOR WASTE MILITARY MUNITIONS

V7.E5.1. SCOPE AND APPLICATION. This enclosure establishes requirements, in addition to those of the Munitions Rule (MR), subpart M of part 266 of Title 40, CFR, for storage of waste military munitions in the United States.

V7.E5.1.1. The Environmental Protection Agency issued the MR to define when chemical and conventional military munitions become a solid or hazardous waste and to provide for the safe storage and transportation of such waste. The MR sets forth two approaches for the storage of waste military munitions:

V7.E5.1.1.1. A conditional exemption (CE) from certain "Resource Conservation and Recovery Act (RCRA)" (see section 6901 of Title 42, U.S.C.) requirements.

V7.E5.1.1.2. A new RCRA storage unit standard (i.e., subpart EE of parts 264 and 265 of Title 40, CFR).

V7.E5.1.2. The MR takes precedence over these standards.

V7.E5.1.3. **(Added)(AF)** A military munition is a "waste" if it is a solid or hazardous waste under regulations implementing the RCRA. Refer to 40 CFR Part 266.202 for when a military munition is, or is not, classified as solid waste. **(T-0).**

V7.E5.1.4. **(Added)(AF)** Follow munitions management standards detailed in DoDM 4715.26. **(T-0).**

V7.E5.2. WAIVERS AND EXEMPTIONS

V7.E5.2.1. CE Storage. Waivers and exemptions from this manual are not authorized for AE storage facilities (referred to in this volume as an ASU) storing CE waste military munitions.

V7.E5.2.2. RCRA Storage. Waivers and exemptions from this manual must only be available to the DoD Components storing waste munitions in accordance with RCRA unit standards (e.g., subpart EE of part 264 of Title 40, CFR). The approval authority for these waivers and exemptions is the Secretary of the Military Department, who may delegate the authority no lower than an assistant secretary.

V7.E5.2.3. **(Added)(AF)** The approval level for all deviations is the Secretary of the Air Force. Approvals may be delegated no lower than the Assistant Secretary of the Air Force. Refer to **Volume 1 – Enclosure 3** for the deviation process.

V7.E5.3. REQUIREMENTS FOR STORAGE OF WASTE MILITARY MUNITIONS UNDER CE

V7.E5.3.1. Compliance with section 266.205(a) of Title 40, CFR. The DoD Components must ensure that waste military munitions stored under CE comply with section 266.205(a) of Title 40, CFR. The MR-established CE does not apply to toxic CAs or toxic chemical munitions.

V7.E5.3.2. DoD Component Responsibilities. The DoD Components must ensure that installations and responsible activities:

V7.E5.3.2.1. Maintain records of stored waste military munitions for a minimum of 3 years from the date they were last stored. The records must be distinguished by type. A separate record or line item is required for each type of munition in any mixed lot of munitions received for storage. The record must include the following:

V7.E5.3.2.1.1. The type of waste military munitions stored by standard nomenclature, lot number, federal supply class, national stock number, DoD identification code, and condition code.

V7.E5.3.2.1.2. The quantity stored.

V7.E5.3.2.1.3. The date identified as "waste."

V7.E5.3.2.1.4. The date they left storage.

V7.E5.3.2.1.5. The storage location or locations (e.g., building number or storage pad, and grid coordinates) where they were stored.

V7.E5.3.2.1.6. The means (e.g., destroyed, demilitarized, and shipped) and date of disposition.

V7.E5.3.2.1.7. When applicable, the sending and receiving sites for those waste military munitions received from or shipped to off-site sources.

V7.E5.3.2.2. Physically separate (e.g., on a separate pallet or shelf) waste military munitions from non-waste military munitions when both are stored in the same ASU.

V7.E5.3.2.3. Clearly mark the physically separated waste military munitions to ensure proper identification.

V7.E5.3.2.4. Store waste military munitions under CE in ASUs that comply (without waiver or exemption) with the provisions of this manual. Each ASU storing waste military munitions or explosives under CE must be included in a DDESB-approved explosives safety site plan that the installation keeps on file. Those portions of the site plan addressing ASUs storing waste military munitions under CE must be made available to applicable federal or State environmental regulatory authorities on request.

V7.E5.3.2.5. Have SOPs or plans in accordance with section **V1.E10.6.** that provide safety, security, and environmental protection. Those plans must be coordinated with the applicable federal, State, and local emergency response authorities (e.g., law enforcement, fire departments, and hospitals) and any established Local Emergency Planning Committee.

V7.E5.3.3. Loss of CE

V7.E5.3.3.1. The unpermitted or uncontrolled detonation, release, discharge, or migration (e.g., loss or theft, or as a result of fire or explosion) of waste military munitions out of any ASU that might endanger human health or the environment must result in the immediate loss of CE for those waste military munitions. Incidents of that nature and the loss of CE require reporting in accordance with section **V7.E5.5.**

V7.E5.3.3.2. The applicable federal or State environmental regulatory authorities may withdraw CE based on review or inspection of the installation's or responsible activity's compliance with the requirements for storage of waste military munitions under CE. The DoD Components may, at any time, restrict an activity from using CE. Additionally, the DDESB or the DoD Component, upon discovery of a condition that could warrant loss of CE, must report the condition to the applicable DoD Component and to the commander of the installation or responsible activity.

V7.E5.3.3.2. **(Added)(AF)** AF units will report this to their MAJCOM who will then report it to AFSEC/SEW. **(T-1).**

V7.E5.3.3.3. If CE is lost, the waste military munitions are subject to other RCRA hazardous waste regulations. The installation or responsible activity must obtain any required RCRA permits because of the loss of CE.

V7.E5.3.3.4. Installations and responsible activities may apply for reinstatement of CE in accordance with section 266.205(c) of Title 40, CFR.

V7.E5.4. OTHER STORAGE STANDARDS

V7.E5.4.1. The DoD Components must forward to the Executive Director, DDESB, a copy of their implementing standards or regulations pertaining to the storage of waste military munitions.

V7.E5.4.2. Many States regulate waste management activities, including the storage of waste military munitions. Their authority is based on the waiver of sovereign immunity in federal environmental laws. Their laws, to the extent they fall within the waivers of sovereign immunity, take precedence over these standards.

V7.E5.4.2.1. If such State regulations conflict with DDESB or the DoD Components' explosives safety standards, the affected Component must attempt to resolve the conflict.

V7.E5.4.2.1. **(Added)(AF)** In the event such State regulations conflict with Air Force explosives safety standards, AFSEC/SEW will attempt to resolve the conflict.

V7.E5.4.2.2. For those issues that cannot be resolved, the DoD Component must notify the Executive Director, DDESB, through its Board Member if it has one, of any irreconcilable conflict of State law, regulation, or directive with these or other DoD or Military Component explosives safety standards.

V7.E5.5. UNPERMITTED AND UNCONTROLLED LOSS REPORTING. In addition to other applicable reporting requirements, installations and responsible activities must notify their chain of command, the Executive Director, DDESB (through the DoD Component channels), the applicable federal or State environmental regulatory authority, and established local committees, as follows:

V7.E5.5. **(Added)(AF)** Installations and responsible activities will notify AFSEC/SEW through the MAJCOM. **(T-1).**

V7.E5.5.1. By phone or, in the case of the DoD Component and the DDESB, electronically (by email message or facsimile and using the format specified in **Volume 1 – Enclosure 4**) within 24 hours from the time the installation or responsible activity becomes aware of any unpermitted or uncontrolled detonation, release, discharge, or migration of waste military munitions out of any ASU (e.g., loss or theft, or as a result of fire or explosion) that may endanger human health or the environment; and

V7.E5.5.2. In writing, if the initial report was telephonic, within 5 days from the time the installation or responsible activity becomes aware of any unpermitted or uncontrolled detonation, release, discharge, or migration of waste military munitions out of any ASU (e.g., loss or theft, or as a result of fire or explosion) that may endanger human health or the environment. Follow-up reports to the DoD Component and the DDESB are required only when relevant information, which was not previously reported, becomes known. Such reports, to include a report of investigation, must comply with the requirements of **Volume 1 – Enclosure 4**.

V7.E5.5.2. **(Added)(AF)** If necessary, follow up reports will be sent to AFSEC/SEW.

V7.E5.6. CLOSURE OF FACILITIES STORING WASTE MILITARY MUNITIONS UNDER CE

V7.E5.6.1. In addition to the explosives safety requirements of **Volume 1 – Enclosure 11**:

V7.E5.6.1.1. When an ASU that stored waste military munitions under CE is permanently taken out of service for the storage of non-waste and waste military munitions, installations and responsible activities must ensure that such ASUs are closed in accordance with applicable requirements.

V7.E5.6.1.2. Installations or responsible activities must notify the cognizant federal or State environmental regulatory authorities in writing at least 45 calendar days before the closure activities begin, or as provided by applicable law. Initiation of those closure procedures should occur within 180 calendar days, or as provided by applicable law, after the date the decision is made to permanently stop using the ASU for the storage of military munitions.

V7.E5.6.1.3. On completion of closure activities, a "Certification of Closure," signed by the installation or responsible activity commander, or other equivalent level authority, and by an independent (i.e., an individual not assigned within the commander's or equivalent-level authority's chain of command) registered professional engineer must be submitted to the cognizant federal or State environmental regulatory authorities within 90 calendar days of completing the closure activities, or as provided by applicable law.

V7.E5.6.1.4. The "Certification of Closure" must state, at a minimum, that each of the explosives safety requirements in **Volume 1 – Enclosure 11** have been met and that waste military munitions and residues are removed in such a manner as to protect the public and the environment consistent with the planned use of the ASU and the property.

V7.E5.6.1.5. If closure certification cannot be rendered, the installation or responsible activity must contact the proper federal or State environmental regulatory authorities to determine the required course of action.

V7.E5.6.2. When an ASU that stored waste military munitions under CE is permanently taken out of service for the storage of waste military munitions, but is to continue in service for the storage of non-waste military munitions, installations and responsible activities must ensure that waste military munitions and residues are removed.

V7.E5.7. CLOSURE OF FACILITIES STORING WASTE MILITARY MUNITIONS UNDER RCRA. In addition to those explosives safety requirements in **Volume 1 – Enclosure 11**, closure procedures for those sites operating under existing RCRA (subpart EE of parts 264 and 265 of Title 40, CFR) permits must follow the closure requirements stipulated in the respective permit.

VOLUME 7 – ENCLOSURE 6: MPPEH

V7.E6.1. SCOPE. This enclosure establishes explosives safety standards for MPPEH that supplement guidance provided in DoDI 4140.62. These standards are intended to protect personnel and property from unintentional exposure to potential explosive hazards associated with material (including waste material) being managed or transferred within or released from DoD control.

V7.E6.2. FUNCTIONS

V7.E6.2.1. The DoD Component heads must establish criteria that may be risk-based to determine and document whether a receiver, either a DoD Component or non-DoD entity, is qualified to receive, manage, and process MPPEH through its release from DoD control. These criteria must be coordinated with the DDESB and the Assistant Secretary of Defense for Logistics and Materiel Readiness.

V7.E6.2.2. The DDESB must develop, through its coordination processes, specific explosives safety management (ESM) procedures and standards for determining the explosives safety status of material and for processing MPPEH through its release from DoD control. The requirements of DoDI 4140.62 and other DoD issuances will be synchronized with these ESM procedures and standards.

V7.E6.2.3. MPPEH, material documented as safe (MDAS), and material documented as an explosive hazard (MDEH) must be managed in a manner that complies with explosives safety standards, materiel management policies, and environmental requirements. The effective management of MPPEH, MDAS, and MDEH will help prevent the unauthorized or unintentional transfer or release of an explosive hazard from DoD control; the transfer or release of material documented hazardous to an unqualified receiver; or a shipment that violates hazardous material transportation regulations.

V7.E6.2.4. (Added)(AF) Training.

V7.E6.2.4.1. **(Added)(AF)** Personnel who have responsibilities associated with MPPEH, MDEH and MDAS will meet the qualifications and requirements specified in DoDI 4140.62 and AFMAN 21-201, necessary to accomplish their assigned duties. **(T-1).**

V7.E6.2.4.2. **(Added)(AF)** The commander or authorized official directly responsible for controlling the transfer or release of MPPEH, MDEH and MDAS will ensure personnel are assigned to a technically qualified position or designated, in writing, and confirm they are technically qualified to perform the duties assigned. **(T-1).**

V7.E6.2.4.3. **(Added)(AF)** Commanders will ensure contractor personnel will be designated as technically qualified and approved as provided in contracts. **(T-1).**

V7.E6.3. COLLECTED MPPEH

V7.E6.3.1. Control

V7.E6.3.1.1. MPPEH must be controlled and managed (e.g., sorted, segregated, stored, secured) to prevent its unauthorized use, transfer or release, and to protect personnel and property from uncontrolled exposures to potential explosive hazards.

V7.E6.3.1.2. Before its transfer within the DoD or release from DoD control, personnel certified by the responsible authority (e.g., installation commander) as technically qualified to act as signatories in determining the material's explosives safety status must document, in writing, that the material's characterization as safe (i.e., MDAS) or explosively hazardous (i.e., MDEH) is proper in accordance with the requirements in section 6901 of Title 42, U.S.C.

V7.E6.3.2. Siting

V7.E6.3.2.1. Locations used for collected MPPEH processing operations (e.g., consolidation, inspection, sorting, storage, transfer, release) (MPPEH processing points) must be sited in accordance with Volumes **3, 4**, and **5** of this manual as:

V7.E6.3.2.1.1. An ES, at not less than ILD from surrounding PESs.

V7.E6.3.2.1.2. A PES, when the MPPEH has not been documented as having an explosives safety status of safe (i.e., MDAS) or when the material has been documented as an explosive hazard (i.e., MDEH).

V7.E6.3.2.2. DDESB approval of siting is not required for locations on operational ranges that are used temporarily during range clearance activities for intermediate management of collected MPPEH (MPPEH collection points) before transfer to a MPPEH processing point. Range managers must ensure that MPPEH collection points are located so that their ESQD arcs, based on the hazard classification and NEWQD assigned (as addressed in paragraph **V7.E6.3.2.3.**), remain within the operational range's impact area and associated safety buffer zone.

V7.E6.3.2.3. The hazard classification and NEWQD must be based upon characteristics of the type material involved, its packaging arrangement (if packaged), and the estimated or, if known, calculated amount of explosives potentially present.

V7.E6.3.3. Marking and Securing

V7.E6.3.3.1. Containers and holding areas for material being processed must be secured and clearly marked as to the explosive hazard, if any that may be present.

V7.E6.3.3.2. MPPEH processing must be managed in a "chain of custody" manner that prevents:

V7.E6.3.3.2.1. MDEH from being commingled with MPPEH or MDAS.

V7.E6.3.3.2.2. MDEH from being misidentified as MPPEH or MDAS once the explosive hazards it presents have been determined.

V7.E6.3.3.2.3. MDAS from being commingled with MPPEH or MDEH.

V7.E6.3.3.2.4. MDAS from being misidentified as MPPEH or MDEH once it has been determined to be safe.

V7.E6.3.3.3**. (Added)(AF)** Disposition Procedures. The actual procedures used to control, secure, mark, inspect, certify, document, transfer, release, demilitarize or dispose of MPPEH, MDEH or MDAS will follow the requirements prescribed in AFMAN 21-201. **(T-1).**

V7.E6.3.4. Transporting

V7.E6.3.4.1. MDAS may, from an explosives safety perspective, be transported or shipped over public transportation routes.

V7.E6.3.4.1.1. The explosives safety status documentation must accompany the shipment.

V7.E6.3.4.1.2. If the shipment contains hazardous materials or hazardous wastes other than explosives, transportation must comply with all applicable requirements of federal, State, interstate, and local laws.

V7.E6.3.4.1.2.1. Hazard classification assignments for the material being shipped may be required.

V7.E6.3.4.1.2.2. Any hazard classification assignments required must accompany the shipment.

V7.E6.3.4.2. MPPEH or MDEH must not be transported or shipped over public transportation routes unless determined safe for transport by personnel who the commander or responsible authority certifies as technically qualified to make such a determination.

V7.E6.3.4.2.1. A determination that MPPEH or MDEH is safe for transport must be documented and signed by the individual making the determination. A copy of this certification must accompany the shipment.

V7.E6.3.4.2.1. **(Added)(AF)** Follow procedures outlined in paragraph **V1.E6.42.1.** of this publication.

V7.E6.3.4.2.2. Hazard classification assignments are required to accompany the shipment (see paragraph **V7.E6.3.2.3.** for hazard classification requirements).

JOHN T. RAUCH
Major General, USAF
Chief of Safety

GLOSSARY

G.1. ACRONYMS.

(Added)(AF) AAHMS	Associate Administrator for Hazardous Materials Safety
AAR	after action report
(Added)(AF) AA&E	arms, ammunitions and explosives
AASTP	allied ammunition storage and transport publication
AC	hydrogen cyanide
AE	ammunition and explosives
AEL	airborne exposure limit
(Added)(AF) AFCEC	Air Force Civil Engineer Center
(Added)(AF) AFE	aircrew flight equipment
(Added)(AF) AFI	Air Force Instruction
(Added)(AF) AFMAN	Air Force Manual
(Added)(AF) AFMC	Air Force Materiel Command
(Added)(AF) AFPAM	Air Force Pamphlet
(Added)(AF) AFPD	Air Force Policy Directive
(Added)(AF) AFRC	Air Force Reserve Command
(Added)(AF) AFSEC	Air Force Safety Center
(Added)(AF) AFTTP	Air Force Tactics Techniques and Procedures
(Added)(AF) AGE	aerospace ground equipment
AGM	aboveground magazine
AGS	aboveground structure; aboveground site
AGS (H)	aboveground structure, heavy wall
AGS (H/R)	aboveground structure, heavy wall and roof
AGS (L)	aboveground structure, light

AHA	ammunition holding area
(Added)(AF) AIM	air intercept missile
AIT	automatic identification technology

AM	acquisition manager
(Added)(AF) AMRAAM	advanced medium range air-to-air missile
(Added)(AF) ANG	Air National Guard
(Added)(AF) ANSI	American National Standards Institute
APOD	aerial port of debarkation
APOE	aerial port of embarkation
ASD(S)	Assistant Secretary of Defense for Sustainment
ASME	American Society of Mechanical Engineers
ASU	ammunition storage unit
(Added)(AF) ATC	air traffic control
(Added)(AF) AUR	all-up-round
(Added)(AF) AURC	all-up-round container
B	barricaded
(Added)(AF) BASH	bird or wildlife aircraft strike hazard
(Added)(AF) BDOC	Base Defense Operations Center
BIP	blow-in-place
BLAHA	basic load ammunition holding area
BOS-I	base operating support integrator
°C	degrees Celsius
C	distance between cells
C&RI	consequence and risk identification
CA	chemical agent
CAPA	combat aircraft parking area
(Added)(AF) CBGS	confined by ground surface
(Added)(AF) CBM	confined by missile
(Added)(AF) CBR	chemical, biological, radiological
CBU	cluster bomb/dispenser unit
C_c	critical cover thickness
CCDR	combatant commander
CE	conditional exemption
(Added)(AF) CE	civil engineering; civil engineer
CEA	captured enemy ammunition
CFR	Code of Federal Regulations

CG	carbonyl dichloride (also known as phosgene); compatibility group
CJCSI	Chairman of the Joint Chiefs of Staff instruction
CK	cyanogen chloride
ClF_3	chlorine trifluoride
ClF_5	chlorine pentafluoride
cm	centimeter
cm^2	square centimeter
(Added)(AF) CNG	compressed natural gas
(Added)(AF) CNU	container unit
COB	combat operating base
(Added)(AF) COCO	contractor owned contractor operated
(Added)(AF) CONUS	Continental United States
(Added)(AF) C&RI	consequence and risk identification
CSS	chemical safety submission
CWM	chemical warfare material
D	diameter
D	distance
D_{cd}	chamber separation distance required to prevent hazardous spall effects
D_{cp}	chamber separation distance required to prevent propagation by rock spall
DDESB	Department of Defense Explosives Safety Board
(Added)(AF) DESR	Defense Explosives Safety Regulation
(Added)(Add) DID	Data Item Description
DMM	discarded military munitions
(Added)(AF) DoD	Department of Defense
(Added)(AF) DODAC	DoD ammunition code
DoDD	DoD directive
(Added)(AF) DODIC	DoD identification code
DoDI	DoD instruction
DoDM	DoD manual
DOT	Department of Transportation
(Added)(AF) DTR	Defense Transportation Regulation

EC	engineering control
(Added)(AF) ECC	Emergency Communication Center
ECM	earth-covered magazine
(Added)(AF) EDWT	explosively-driven water tools
EED	electro-explosive device
E_f	expected fatalities
EID	electrically initiated device
EIDS	extremely insensitive detonating substance
ELCG	energetic liquid compatibility group
EME	electromagnetic environment
(Added)(AF) EMM	earth moving machinery
EMR	electromagnetic radiation
EOD	explosive ordnance disposal
EODIMS	Explosive Ordnance Disposal Incident Management System
(Added)(AF) EOR	end-of-runway
(Added)(AF) EPA	Environmental Protection Agency
EQN	equation
(Added)(AF) ERO	engine running onload or offload
ES	exposed site
ESM	explosives safety management
ESMP	Explosives Safety Management Program
ESMRM	explosives safety and munitions risk management
(Added)(AF) ESP	explosives site plan (may also be referrend to as a QD safety submission (QDSS))
ESQD	explosives safety quantity-distance
ESS	explosives safety submission
(Added)(AF) EZ	evaluation zone
°F	degrees Fahrenheit
(Added)(AF) F	front
FAA	Federal Aviation Administration
FARP	forward arming and refueling point
(Added)(AF) FB	front barricaded
(Added)(AF) FHC	final hazard classification
(Added)(AF) FLM	focused lethality munition
(Added)(AF) FSC	federal supply class

(Added)(AF) FSS	Force Support Squadron
ft	foot; feet
ft^2	square foot; square feet
ft^3	cubic feet
(Added)(AF) FU	front unbarricaded
FUDS	formerly used defense site
GA	dimethylaminoethoxy-cyanophosphine oxide (common name is tabun) (nerve agent)
GB	isopropyl methylphosphonofluoridate (common name is sarin) (nerve agent)
(Added)(AF) GCA	ground control approach
GCC	geographic combatant commander
GD	pinacolyl methylphosphonofluoridate (common name is soman) (nerve agent)
(Added)(AF) GOCO	Government Owned Contractor Operated
(Added)(AF) GOV	Government Owned Vehicle
GSA	General Services Administration
(Added)(AF) H	heavy wall
(Added)(AF) HA	holding area
HAN	hydroxyl ammonium nitrate
HAS	hardened aircraft shelter
HBESL	health-based environmental screening level
HC	hexachlorethane
HD	hazard division
HDD	hazardous debris distance
HE	high explosive
(Added)(AF) HEDP	high explosive dual-purpose
(Added)(AF) HEI	high explosive incendiary
HERO	hazards of electromagnetic radiation to ordnance
HEW	high explosive weight
HFD	hazardous fragment distance
H/HD	2,2’ dichlorodiethyl sulfide (common name is distilled mustard) (blister agent)
H/HT	60% HD and 40% 2,2’ dichloroethylthiodiethyl ether (common name is mustard-T mixture) (blister agent)

(Added)(AF) HMMWV	high mobility multipurpose wheeled vehicle
HMX	cyclotetramethylene-tetranitramine
H_2O_2	hydrogen peroxide
HPM	high performance magazine
(Added)(AF) H/R	heavy wall/roof
(Added)(AF) HSS	hybrid safety submission
HWCL	hazardous waste control limit
IA	installation activity; international agreement
IATG	international ammunition technical guidelines
(Added)(AF) IAW	in accordance with
(Added)(AF) IB	inhabited building
IBD	inhabited building distance
(Added)(AF) ICBM	intercontinental ballistic missile
(Added)(AF) ICT	integrated combat turnarounds
(Added)(AF) IED	improvised explosive device
(Added)(AF) IHC	interim hazard classification
IHF	interim holding facility
(Added)(AF) IL	intraline
ILD	intraline distance
(Added)(AF) IM	intermagazine
IMD	intermagazine distance
ips	inches per second
(Added)(AF) IR	infrared
IRFNA	inhibited red fuming nitric acid
(Added)(AF) IRP	Installation Response Program
ISO	International Standardization Organization
(Added)(AF) JCS	Joint Chiefs of Staff
JHCS	joint hazard classification system
JP	jet propellant
(Added)(AF) JP	Joint Publication
K	K-factor (English system)
kg	kilogram

K_m	K-factor (metric system)
kPa	kilopascal
kph	kilometers per hour
kV	kilovolt
kW	kilowatt
L	dichloro (2-chlorovinyl) arsine (common name is lewisite) (blister agent)
lbs	pounds
(Added)(AF) LARA	launch area risk analysis
(Added)(AF) LAW	Light Anti-Armor Weapon
(Added)(AF) LF	launch facilities
LH_2	liquid hydrogen
LO_2	liquid oxygen
(Added)(AF) LOA	letter of agreement
(Added)(AF) LOX	liquid oxygen
(Added)(AF) LP	liquefied petroleum
LPS	lightning protection system
(Added)(AF) LSRM	large solid rocket motor
LUC	land use control
m	meter
M	distance between modules
m^2	square meter
(Added)(AF) MAJCOM	major command
m^3	cubic meter
(Added)(AF) MAF	Missile Alert Facility
MCE	maximum credible event
MDAS	material documented as safe
MDEH	material documented as an explosive hazard
MEC	munitions and explosives of concern
(Added)(AF) MED	minimum evacuation distance
(Added)(AF) MEQ	mission essential quantities
MFD	maximum fragment distance
(Added)(AF) MFD-	maximum fragment distance-horizontal

H

mg	milligram
MGFD	munition with the greatest fragmentation distance
mg-min	milligrams per minute
(Added)(AF) MHE	materials handling equipment
(Added)(AF) MHT	minuteman handling team
MILCON	military construction
MIL-STD	military standard
(Added)(AF) MK	mark
mm	millimeter
(Added)(AF) MME	modern mobile emitter
MMH	monomethylhydrazine
(Added)(AF) MMHE	munitions materials handling equipment
(Added)(AF) MMRP	Military Munitions Response Program
(Added)(AF) MRESS	munitions response explosives safety submission
MMS(SR)	mobile missile system in a static role
MN	multinational
MON	mixed oxides of nitrogen
mph	miles per hour
MPPEH	material potentially presenting an explosive hazard
MPS	maritime prepositioning ship
MR	munitions rule
MRA	munitions response area
(Added)(AF) MRAP	Mine Resistant Ambush Protected
MRC	multiple round container
MRS	munitions response site
ms	millisecond
(Added)(AF) MSA	Munitions Storage Area
MSD	minimum separation distance
MWD	military working dog
MWR	morale, welfare, and recreation
(Added)(AF) NAF	Numbered Air Force

(Added)(AF) NASAMS	Norwegian Advanced Surface to Air Missile System
NATO	North Atlantic Treaty Organization
NDAI	no DoD action indicated
NEC	National Electrical Code
NEQ	net explosive quantity
NEW	net explosive weight
NEWQD	net explosive weight for quantity-distance
NFPA	National Fire Protection Association
N_2H_4	hydrazine
(Added)(AF) NIN	national identification number
NIOSH	National Institute of Occupational Safety and Health
N_2O_4	nitrogen tetroxide
(Added)(AF) NNMSB	Nonnuclear Munitions Safety Board
NOFA	no further action
NORAD	North American Aerospace Defense Command
NORTHCOM	Northern Command
NPW	net propellant weight
(Added)(AF) NSN	national stock number
OB	open burning
(Added)(AF) OCONUS	Outside the Continental United States
OD	open detonation
(Added)(AF) OI	operating instruction
OMA	Operations and Maintenance, Army
OSHA	Occupational Safety and Health Administration
P	pad size
(Added)(AF) PACAF	Pacific Air Forces
PAED	public access exclusion distance
(Added)(AF) PAN	percussion actuated neutralizer

Pa-s	pascal-seconds
(Added)(AF) PAS	protective aircraft shelter

PBAN	polybutadiene-acrylic acid-acrolyonitrile
(Added)(AF) PCO	procuring contract officer
PES	potential explosion site
PETN	pentaerythritol tetranitrate
P_f	probability of fatality
PM	program manager
(Added)(AF) POL	petroleum, oils, and lubricants
POV	privately owned vehicle
PPE	personal protective equipment
psi	pounds per square inch
PTR	public traffic route
PTRD	public traffic route distance
PWP	plasticized white phosphorus
Q	net explosive quantity in kilograms
QA/QC	quality assurance and quality control
QD	quantity-distance
(Added)(AF) R	rear
(Added)(AF) RAPCON	radar approach control
(Added)(AF) R&D	research and development
RCRA	Resource Conservation and Recovery Act
RCS	report control symbol
RCWM	recovered chemical warfare material
(Added)(AF) RDT&E	research, development, test and evaluation
RDX	cyclotrimethylenetrinitramine (also known as cyclonite, hexogen, or royal demolition explosive)
RF	radio frequency
RFID	radio frequency identification
(Added)(AF) RFTF	response force tactical facility
(Added)(AF) RM	risk management
RORO	roll-on/roll-off
RP	rocket propellant

RSP	render safe procedure

(Added)(AF) RV	reentry vehicle
s	second
(Added)(AF) S	side
SAFER©	Safety Assessment for Explosives Risk
SCBA	self-contained breathing apparatus
SD	sympathetic detonation
(Added)(AF) SDB	small diameter bomb
(Added)(AF) SDDC	Surface Deployment and Distribution Command
(Added)(AF) SDS	safety data sheet
SDW	substantial dividing wall
(Added)(AF) SECAF	Secretary of the Air Force
SG	sensitivity group
(Added)(AF) SOFA	status-of-forces agreement
SOP	standard operating procedure
SPOD	seaport of debarkation
SPOE	seaport of embarkation
(Added)(AF) SSD	safe separation distance
STEL	short-term exposure limit
(Added)(AF) STMS	secure transportable maintenance truck
(Added)(AF) TE	transporter erector
TEA	triethyl aluminum
(Added)(AF) THAAD	terminal high altitude area defence
(Added)(AF) TM	technical manual
TNT	trinitrotoluene
(Added)(AF) TO	technical order
(Added)(AF) TP	technical paper
TPA	thickened triethyl aluminum
TSD	team separation distance
TWA	time-weighted average
U	unbarricaded

(Added)(AF) UALS universal ammunition loading System

UDMH	unsymmetrical dimethylhydrazine
(Added)(AF) UFC	Unified Facilities Criteria
(Added)(AF) UL	Underwriters' Laboratories
UN	United Nations
(Added)(AF) U.S.	United States
USACE	U.S. Army Corps of Engineers
(Added)(AF) USAFE-AFAFRICA	United States Air Forces in Europe-United States Air Forces Africa
(Added)(AF) USAFCENT	United States Air Forces Central
U.S.C.	United States Code
USD(A&S)	Under Secretary of Defense for Acquisition and Sustainment
USD(AT&L)	Under Secretary of Defense for Acquisition, Technology, and Logistics
UXO	unexploded ordnance
VX	0-ethyl S-[2-(diisopropylamino) ethyl] methylphosphonothioate (nerve agent)
w	loading density
W	weight
(Added)(AF) WDU	weapon delivery unit
WP	white phosphorus
(Added)(AF) WRM	war reserve materiel
(Added)(AF) WSM	weapons safety manager
(Added)(AF) WSSR	weapons system safety rule
(Added)(AF) WSV	weapons storage vault

G.2. DEFINITIONS. Unless otherwise noted, these terms and their definitions are for the purposes of this manual.

acceptor. See "donor and acceptor."

action level. One-half of the exposure limit for a CA averaged over an 8-hour work shift.

active installation. A military installation that is currently in service and being regularly used for military activities.

administration area. The area containing administrative buildings that support the installation as a whole, excluding those offices located near and directly serving AE storage and operating areas.

AE. Includes, but is not limited to, all items of U.S.-titled (i.e., owned by the U.S. Government through the DoD Components) ammunition; propellants, liquid and solid; pyrotechnics; HEs; guided missiles; warheads; devices; and CA substances, devices, and components presenting real or potential hazards to life, property, and the environment. Excluded are wholly inert items and nuclear warheads and devices, except for considerations of storage and stowage compatibility, blast, fire, and nonnuclear fragment hazards associated with the explosives. (See "military munitions.")

AE aircraft cargo area. Any area specifically designated for aircraft loading or unloading of transportation-configured AE or parking aircraft loaded with transportation-configured AE.

AE area. An area specifically designated and set aside from other portions of an installation for the development, manufacture, testing, maintenance, storage, or handling of AE.

AE facility. Any structure or location containing AE. (Formerly called explosives facility.)

AEL. TWAs or ceiling values that define the permissible limits of toxic CA exposure for unprotected personnel.

AGS (H). AGS with a wall thickness of 12 inches [304.8 millimeters (mm)] or more of reinforced concrete; as an ES, door must be barricaded if it faces a PES.

AGM. Any open area, vehicle, or any AGS not meeting the requirements of an ECM that is used for explosives storage.

AGS. Any aboveground, non-earth-covered structure or site.

AGS (H/R). AGS with a wall thickness of 12 inches [304.8 mm] or more of reinforced concrete and a roof thickness of more than 5.9 inches [149.9 mm] of reinforced concrete; as an ES, door must be barricaded if it faces a PES; side and rear exposures may or may not be barricaded.

AGS, light (AGS (L)). AGS that is a light structure, open stack, truck, trailer, or railcar.

(Added)(AF) aircraft battle damage repair sites. Sites where battle damage is simulated on aircraft hulls by detonating up to two ounces of explosives packed inside a length of steel pipe.

(Added)(AF) aircraft explosives cargo parking area. Any area, commonly called a hot cargo pad, specifically designated for parking aircraft loaded with transportation-configured explosives cargo, or those being loaded, unloaded, or awaiting loading. This definition is placed in this document and is primarily used in the ESS program.

aircraft passenger transport operations. Passenger transport operations are defined for the purposes of QD as passenger transport traffic involving military dependents and civilians other than those employed by or working directly for the DoD Components. The following are not considered passenger transport operations: infrequent flights of base and command administrative aircraft that may, on occasion, provide some space available travel to authorized personnel; travel of direct hire appropriated funds personnel employed by any DoD Component; travel of such personnel as contractor and technical representatives traveling to or from direct support assignments at DoD installations.

ammunition. Generic term related mainly to articles of military application consisting of all kinds of bombs, grenades, rockets, mines, projectiles, and other similar devices or contrivances.

anchorages.

scuttling site. A designated area of water for positioning a ship for its flooding or sinking under emergency situations.

explosives anchorage. A designated area of water used for AE loading and unloading of vessels and for anchoring vessels carrying a cargo of AE.

anomaly avoidance. Techniques employed on property known or suspected to contain UXO, other munitions that may have experienced abnormal environments (e.g., DMM), munitions constituents in high enough concentrations to pose an explosive hazard, or CA, regardless of configuration, to avoid contact with potential surface or subsurface explosive or CA hazards, to allow entry to the area for the performance of required operations.

ASU. All types of explosives storage magazines (e.g., open storage areas, sheds, bunkers, ECM, and AGM).

auxiliary building. Any building (e.g., power plant, change house, paint and solvent locker, and similar facilities) related to or maintained and operated to serve an operating building, line, plant, or pier area. AE is not present in an auxiliary building.

(Added)(AF) Bar. This is the barometric pressure at sea level. One Bar = 14.5 psi; 3-Bar = 45 psi; 7-Bar = 100 psi.

barge piers. Piers and wharves used exclusively for loading and/or unloading explosives on barges or utility craft.

barge units. See “ship or barge units.”

barricade. An intervening natural or artificial barrier of such type, size, and construction that limits the effect of an explosion on nearby buildings or exposures in a prescribed manner.

barricaded open storage module. A series of connected, barricaded cells with hard surface storage pads.

blast impulse. The area under the positive phase of the overpressure-time curve.

blast overpressure. The pressure above ambient in a shock wave.

bonding. A physical and electrical connection between a metal object and the LPS. This produces electrical continuity between LPS and the object and minimizes electromagnetic potential differences. Bonding is done to prevent side-flash. Methods of bonding include mechanical, compression, and thermal types.

BOS-I. Defined in CJCSI 4360.01A.

break room. A room in an operating building or a separate facility used by personnel to take breaks and eat meals.

(Added)(AF) buddy system. At least two persons are present so that one may give assistance to the other if an emergency occurs.

bunker suit. Apparel that consists of trousers or overalls tucked into a pair of boots; it is designed for dressing quickly when answering an alarm.

(Added)(AF) burning areas. Locations sited for disposal of AE by burning.

burning reaction. The energetic material ignites and burns non-propulsively. The case may open, melt, or weaken sufficiently to rupture nonviolently, allowing mild release of combustion gases. Debris primarily remains within the area of the reaction. The debris is not expected to cause fatal wounds to personnel or be a hazardous fragment beyond 50 ft [15.2 m].

CA. Defined in section 1521 of Title 50, U.S.C.

CA hazard. A condition where danger exists because CA is present in a concentration high enough to present potential unacceptable effects (e.g., death, injury, damage) to people, operational capability, or the environment.

CAPA. Any area specifically designated for aircraft loading or unloading of combat-configured munitions or parking aircraft loaded with combat-configured munitions.

CA safety. A condition where operational capability and readiness, people, property, and the environment are protected from the unacceptable effects or risks of a mishap involving CWM and CA in other than munitions configurations.

catenary LPS. An LPS consisting of one or more overhead wires suspended from poles connected to a grounding system via down conductors. The objective is to intercept lightning flashes and provide a zone of protection.

cavern storage site. A natural or manmade cavern adapted for the storage of AE.

CBU military munitions. CBU weapons that are designed to carry and dispense submunitions. (See also "SG.") For purposes of determining case fragment distances for intentional detonations, these military munitions are considered as non-robust munitions.

CE. An exemption from the regulatory definition of hazardous waste (and therefore from compliance with specific environmental requirements pertaining to the storage of hazardous waste) conditioned on compliance with certain criteria requirements, as in section 266.205 of Title 40, CFR.

ceiling value. The concentration of CA that may not be exceeded for any period of time.

CG. Letter designation assigned to AE to indicate what may be stored or transported together without significantly increasing either the probability of an accident or, for a given quantity, the magnitude of the effects of such an accident.

chain of custody. From the time of collection through release from DoD control, the procedures and their implementation, including documentation, marking, and securing, that maintain positive control of MPPEH, MDEH, and MDAS.

chamber storage site. An excavated chamber or series of excavated chambers especially suited to the storage of AE. A cavern may be subdivided or otherwise structurally modified for use as a chamber storage site.

(Added)(AF) change house. A building for employees to change in to and out of work clothes. Such buildings may be provided with sanitary facilities, drinking fountains, lockers, and eating facilities.

classification yard. A railroad yard used for receiving, dispatching, classifying, and switching of cars.

(Added)(AF) clear zone. The area surrounding a PES which is determined by the required IBD separation. The IBD separation will be based on the sited, waivered, exempted, or actual explosives limits of the PES, whichever is greatest.

closure block. A protective construction feature designed to seal the entrance tunnel to an underground storage chamber in the event of an explosion within the chamber.

COB. Defined in CJCSI 4360.01A.

cold iron. The status of a ship that has shut down its main power plant and is dependent on shore power. A ship in cold iron is not capable of providing immediate propulsion.

(Added)(AF) combat aircraft parking group. Two or more aircraft loaded with combat-configured explosives that are parked at less than IMD. This definition is placed in this document and is primarily used in the ESS program.

(Added)(AF) combat configured aircraft. Any aircraft armed with explosives used for direct combat. This could be fighters, bombers, or armed cargo aircraft such as the AC-130.

combustible construction. Construction that uses materials that readily ignite and burn when exposed to fire (e.g., wood frame structures).

compatibility. AE are considered compatible if they may be stored or transported together without significantly increasing either the probability of an accident or, for a given quantity, the magnitude of the effects of such an accident.

(Added)(AF) concurrent operations. Two or more explosives operations within a single facility or location.

(Added)(AF) conditional exemption (CE). An exemption from the regulatory definition of hazardous waste (and therefore from compliance with specific environmental requirements pertaining to the storage of hazardous waste) conditioned on compliance with certain criteria requirements, as in 40 CFR Part 266.205.

conductor. An LPS component designed to transfer the current of a lightning flash to the earth electrode system. Conductors are usually heavy metallic cables. However, metallic building structural members (e.g., steel I-beams) can also function as conductors.

(Added)(AF) confined by ground surface (CBGS). A failure mode of a liquid propellant launch vehicle that does include impact velocities of the liquid propellant tankage (i.e., fallback onto the pad immediately after liftoff). Propellant mixing occurs as well as ignition.

(Added)(AF) confined by missile (CBM). A failure mode of a fueled liquid propellant launch vehicle on a launch pad where an interior bulkhead failure occurs allowing the two propellants to come into contact. Ignition occurs, but there is effectively no impact velocity associated with mixing of the two propellants.

connected-chamber storage site. A chamber storage site consisting of two or more chambers connected by ducts or passageways. Such chambers may be at the ends of branch tunnels off a main passageway.

constriction. Short lengths of tunnel whose cross-sectional areas are reduced to one-half or less of the normal tunnel cross-section. Constrictions reduce the airblast effects passing through them. To be effective, constrictions should be placed within five tunnel diameters of the tunnel exit or to the entrances of storage chambers.

construction support. Assistance provided by DoD EOD or UXO-qualified personnel or by personnel trained and qualified for operations involving CA, regardless of configuration, during intrusive construction activities on property known or suspected to contain UXO, other munitions that may have experienced abnormal environments (e.g., DMM), munitions constituents in high enough concentrations to pose an explosive hazard, or CA, regardless of

configuration, to ensure the safety of personnel or resources from any potential explosive or CA hazards.

container. A package designed to protect AE from hazardous environments during transportation and storage.

(Added)(AF) contingency. A situation requiring military operations in response to natural disasters, terrorists, subversives, or as otherwise directed by appropriate authority to protect U.S. interests. (JP 5-0)

contingency location. Defined in CJCSI 4360.01A.

control site. A location where essential personnel congregate at the time of ignition or initiation of an intentional burn or detonation in order to control, observe or otherwise support (as required by the DoD Component) the operation.

counterpoise. A type of an earth electrode system consisting of conductor cables buried around the structure to be protected. Generally, a counterpoise will have more surface area contacting the earth than ground rod systems.

CWM. Items generally configured as a munition containing a chemical compound that is intended to kill, seriously injure, or incapacitate a person through its physiological effects.

CWM includes V- and G-series nerve agents or H-series (mustard) and L-series (lewisite) blister agents in other-than-munition configurations; and certain industrial chemicals (e.g., hydrogen cyanide (AC), cyanogen chloride (CK), or carbonyl dichloride (called phosgene or CG)) configured as a military munition.

Due to their hazards, prevalence, and military-unique application, CA identification sets are also considered CWM.

CWM does not include riot control devices; chemical defoliants and herbicides; industrial chemicals (e.g., AC, CK, or CG) not configured as a munition; smoke and other obscuration producing items; flame and incendiary producing items; or soil, water, debris or other media contaminated with low concentrations of CAs where no CA hazards exist.

CWM response. Munitions responses and other responses to address the chemical safety; explosives safety, when applicable; human health; or environmental risks presented by CA-filled munitions and CA in other than munitions configurations. (See “munitions response.”)

(Added)(AF) dangerously unserviceable munition. A munition or explosive that has a critical defect identified in the specific item technical order. This defect can result in a higher probability of inadvertent activation or functioning. This may include partially or fully armed or partially expended, broken, damaged, or leaking items, etc., (not necessarily ammunition disposition requests).

debris. Any solid particle thrown by an explosion or other strong energetic reaction. For aboveground explosions, debris refers to secondary fragments. For explosions in underground facilities, debris refers to both primary and secondary fragments.

debris trap. A protective construction feature in an underground facility designed to capture fragments and debris from an explosion within the facility.

defense sites. Defined in section 2710(e)(1) of Title 10, U.S.C..

definitive drawing. A design (e.g., a control bunker, a 3- or 7-Bar ECM, a missile test cell, or a barricade) that has been documented by a DoD Component on numbered drawings approved by the DDESB. The purpose of a definitive drawing is to provide a standard design to ensure consistency in construction. Upon approval by the DDESB, it is not necessary for the definitive drawing to be reviewed again if the design has not been changed.

deflagration reaction. Ignition and rapid burning of the confined energetic materials builds up high local pressures leading to nonviolent pressure release as a result of a low strength case or venting through case closures (e.g., loading ports or fuze wells). The case might rupture but does not fragment; closure covers might be expelled, and unburned and burning energetic materials might be thrown about and spread the fire. Propulsion might launch an unsecured test item, causing an additional hazard. No blast or significant fragmentation damage to the surroundings is expected, only heat and smoke damage from the burning explosive substances.

(Added)(AF) demilitarization (can also be referred to as DEMIL). The act of eliminating the functional capabilities and inherent military design features from DoD personal property. Methods and degree range from removal and destruction of critical features to total destruction by cutting, crushing, shredding, melting, burning, etc. Demilitarization is required to prevent property from being used for its originally intended purpose and to prevent the release of inherent design information that could be used against the United States. Demilitarization applies to DoD personal property in both serviceable and unserviceable condition. (DoDI 4160.28)

(Added)(AF) designated aircraft parking area. An aircraft parking area meeting airfield parking criteria.

detonation reaction. A supersonic decomposition reaction propagates through the energetic materials and produces an intense shock in the surrounding medium and very rapid plastic deformation of metallic cases, followed by extensive fragmentation. All energetic materials will be consumed. Effects will include large ground craters for items on or close to the ground; holing, plastic flow damage, and fragmentation of adjacent metal structures; and blast overpressure damage to nearby structures.

(Added)(AF) deviation. The inclusive term for any departure from the requirements of this manual. Deviations are further divided into waivers, event waivers, exceptions, exemptions, and SECAF waivers and exemptions for new construction.

disposal. End-of-life tasks or actions for residual materials resulting from demilitarization or disposition operations.

disposition. Reusing, recycling, converting, redistributing, transferring, donating, selling, demilitarizing, treating, destroying, or fulfilling other life-cycle guidance, for DoD property subject to these standards.

dividing wall. A wall designed to prevent, control, or delay propagation of a reaction involving AE on opposite sides of the wall.

DMM. Defined in section 2710(e)(2) of Title 10, U.S.C.

documentation of the explosives safety status of material.

Documentation attesting that material:

Does not present an explosive hazard and is consequently safe for unrestricted transfer within or release from DoD control, or

Is MPPEH, with the known or suspected explosive hazards stated, that is only transferable or releasable to a qualified receiver.

This documentation must be signed by a technically qualified individual with direct knowledge of:

The results of both the material's 100 percent inspection and 100 percent re-inspection or of the approved process used and the appropriate level of re-inspection, and

The veracity of the chain of custody for the material.

This signature is followed by the signature of another technically qualified individual who inspects the material on a sampling basis (sampling procedures are determined by the DoD entity that is inspecting the material).

(Added)(AF) DoD Component. An organization within the DoD (e.g., the Air Force).

DoD explosives operations and storage. Explosives operations that are conducted in compliance with the explosives safety standard of this manual by the DoD, or another federal agency or contractor, under DoD control or oversight. This term is applicable only to DoD and federal explosives operations and to non-DoD commercial enterprises directly supporting such operations under contract, including cases where the actions of a single crew or operating line produces material procurable by either DoD or a non-DoD entity or where ownership of the product changes during the process.

(Added)(AF) DoD Explosives Safety Board (DDESB). The DoD organization charged with promulgation of AE safety policy and standards, and with reporting on the effectiveness of the implementation of such policy and standards.

donor and acceptor. A total quantity of stored AE may be subdivided into separate storage units in order to reduce the MCE. The separation distances between separate storage units, with or without an intervening barrier, need to be sufficient (e.g., IMD) ensuring that propagation between units does not occur. The storage unit that reacts initially is termed the donor and nearby units, which may be endangered, are termed acceptors.

down conductor. See "conductor."

dunnage. Inert material associated with the packaging, containerization, blocking, and bracing of AE.

earth electrode system. An LPS component used for transferring current from a lightning flash to the earth. The earth electrode system (e.g., ground rods, counterpoise, buried metal plates, or Ufer grounds) is connected to down conductors and is in direct contact with the earth.

ECM. An aboveground, earth-covered structure that meets soil cover depth and slope requirements of this manual. ECMs have three possible strength designations: 7-Bar, 3-Bar, or Undefined. The strength of an ECM's headwall and door determines its designation.

ECs. The management of facility operations using engineering principles (e.g., facility design, operation sequencing, equipment selection, or process limitations).

EED. Defined in Joint Publication 1-02

EIDS. A substance that, although capable of sustaining a detonation, has demonstrated through tests that it is so insensitive that there is a very low probability of accidental initiation.

electrically initiated device (EID). Defined in Military Handbook MIL-HDBK-240A.

electromagnetic environmental effects. Defined in Military Handbook MIL-HDBK-240A.

EME. Defined in Military Handbook MIL-HDBK-237D.

emergency withdrawal distance. The distance personnel are evacuated to from an ES during an explosive accident or incident.

emission control. Defined in Joint Publication 1-02.

EMR. Defined in Joint Publication 1-02.

(Added)(AF) enduring location. Defined in DoDI 3000.12.

energetic liquid. A liquid, slurry, or gel consisting of or containing an explosive, oxidizer, fuel, or their combination that may undergo, contribute to, or cause rapid exothermic decomposition, deflagration, or detonation.

(Added)(AF) energetic materials. Energetic materials are chemical compounds, or mixtures of chemical compounds, that are divided into three groups according to use: explosives, propellants, and pyrotechnics. Explosives and propellants that have been properly initiated evolve large volumes of hot gas in a short time. The difference between explosives and propellants is the rate the reaction proceeds. In explosives, a fast reaction produces a very high pressure shock in the surrounding medium. This shock is capable of shattering objects. In propellants, a slower reaction produces a lower pressure over a longer period of time. This lower sustained pressure is used to propel objects. Pyrotechnics evolve large amounts of heat but much less gas than propellants or explosives. Various external stimuli can cause release of the energy contained in energetic materials. Knowing the response of individual energetic materials to specific stimuli is important from the point of view of safety. Energetic materials are sensitive to four external stimuli. These are: impact, shock, electrostatic, and thermal. Eliminating or controlling these stimuli is key to eliminating the unintentional initiation of energetic material. The focus of this manual is on these four areas. The hazards associated with energetic material are blast, fragments, mass fire, fire and toxicity.

en route infrastructure. Defined in CJCSI 4360.01A.

(Added)(AF) entry control point (ECP). A location or facility used to control pedestrian or vehicular access to controlled or restricted areas. It is commonly found at the entrance to MSAs and CAPAs. If it is a permanent facility, it is sometimes also called a gate house.

environmental regulators and safety officials. Includes, but may not be limited to, environmental regulators, environmental coordinators, or hazardous material coordinators, law enforcement officers, and safety personnel of the U.S. Environmental Protection Agency, State, interstate, and local governments (which may include federally recognized Indians tribes and Alaska Native entities), and other federal land managers. When appropriate, public health officials of various agencies may also be involved.

EOD. The detection, identification, onsite evaluation, rendering safe, recovery, and final disposal of UXO and of other munitions that have become an imposing danger, for example by damage or deterioration.

EOD personnel. Military personnel who have graduated from the Naval School, EOD; are assigned to a military unit with a Service-defined EOD mission; and meet Service and assigned unit requirements to perform EOD duties. EOD personnel have received specialized training to address explosive and certain CA hazards during both peacetime and wartime. EOD personnel are trained and equipped to perform render safe procedures (RSP) on nuclear, biological, chemical, and conventional munitions, and on improvised explosive devices.

EOD unit. A military organization constituted by proper authority; manned with EOD personnel; outfitted with equipment required to perform EOD functions; and assigned an EOD mission.

equivalent explosive weight. The weight of trinitrotoluene (TNT) required to produce a selected shockwave parameter of equal magnitude at a specific location to that produced by a unit weight of the explosive in question.

ES. A location exposed to the potential hazardous effects (e.g., blast, fragments, debris, or heat flux) from an explosion at a PES.

ES group. Those ESs out to a distance from the PES where contributions to individual risks are no longer significant (i.e., out to the risk-based evaluation distance). (See "risk-based evaluation distance.")

ESM. A cost-effective risk management process, including policies, procedures, standards, engineering, and resources, that addresses potential probabilities and consequences of mishaps involving DoD military munitions or other encumbering explosives or munitions, to sustain operational capabilities and readiness and to protect people, property, and the environment.

ESMRM. A systematic approach that integrates risk analysis into operational planning and military munitions management to produce a documentation process that identifies adverse consequences associated with munitions operations and risk acceptance criteria for key decision makers.

essential personnel. Individuals, as identified by the DoD Component (or incident commander in an emergency situation), necessary for the safe and effective completion of a specific explosives operation.

(Added)(AF) evaluation zone. The area around an ES where the PESs, if filled to maximum capacity, could violate QD to that ES. (Remember, a PES is also an ES).

(Added)(AF) EX number. A reference number, preceded by the prefix EX, which is assigned by DOT to AE that have been evaluated under the provisions of 49 CFR Part 173.56. This definition is placed in this document and is primarily used in reference to hazard classifications for munitions.

(Added)(AF) exception. Written authorization allowing a specific departure from a mandatory requirement of this regulation other than QD criteria.

exemption. A written authorization granted by the proper authority within a DoD Component for strategic or other compelling reasons that permits a long-term deviation from a mandatory requirement of DoD explosives safety criteria.

expansion chamber. A protective construction feature in an underground storage facility designed to reduce the overpressure exiting the facility by increasing the total volume of the tunnel chamber complex. It may also function as an operating area within the underground facility or as a debris trap.

(Added)(AF) explosion proof. Used in referring to electrical equipment; specifically, to equipment enclosed in a case that can withstand an internal burning or explosion of elements inside the case, and can prevent ignition by spark, flash, or explosion of any outside gas or vapor surrounding the enclosure. This definition is placed in this document and is primarily used in the ESS program.

explosion reaction. Ignition and rapid burning of the confined energetic materials builds up high local pressures leading to breakup of the confining structure. Metal cases are fragmented (e.g., brittle fracture) into large pieces that are often thrown long distances. Unreacted or burning energetic materials are also thrown about. Fire and smoke hazards will exist. Air shocks are produced that can cause damage to nearby structures. The blast and high velocity fragments can cause minor ground craters and damage (e.g., breakup, tearing, gouging) to adjacent metal plates. Blast pressures are lower than for a detonation reaction.

explosive. For the purposes of these standards, a substance or a mixture of substances that is capable by chemical reaction of producing gas at such temperature, pressure, and speed as to cause damage to the surroundings. The term “explosive” includes all substances variously known as HEs and propellants, together with igniters, primers, initiators, and pyrotechnics (e.g., illuminant, smoke, delay, decoy, flare, and incendiary compositions).

explosive accident. Accidents resulting in damage or injury from:

An explosion or functioning of explosive materials or devices (except as a result of enemy action).

Inadvertent actuation, jettisoning and releasing, or launching explosive devices.

Impacts of ordnance off-range.

(Added)(AF) explosive equivalent. See "equivalent explosive weight."

(Added)(AF) explosive facility. Any structure or location containing AE. This definition is placed in this document and is primarily used in the ESS program.

explosive hazard. A condition where danger exists because explosives are present that may react (e.g., detonate, deflagrate) in a mishap with potential unacceptable effects (e.g., death, injury, damage) to people, property, operational capability, or the environment.

(Added)(AF) explosive ordnance. All munitions and improvised or clandestine explosive devices, containing explosives, propellants, nuclear fission or fusion materials, and biological and chemical agents. (JP 3-42)

(Added)(AF) explosives area or location. Any area or location specifically designated and set aside from other areas and used for manufacturing, testing, maintenance, storage, demilitarization, shipping and receiving, and other similar type explosives operations. Such

areas may also be referred to as explosives parking or loading areas when armed or explosives-loaded aircraft are involved.

(Added)(AF) explosives content (of a PES). Determination based on the type, quantity, packaging, and hazard class division of the explosives present. Expressed as a net explosives weight (NEWQD) in pounds.

(Added)(AF) explosives loaded aircraft. An aircraft is "explosives-loaded" when it carries munitions or explosives, internally or externally. The term does not include explosive components of aircrew escape systems or pyrotechnics installed in survival kits.

(Added)(AF) explosives operations office. Any office adjacent to or within an explosives area where operational administrative functions pertaining to explosives are performed. Also known as a field office.

explosives or munitions emergency response. Defined in section 260.10 of Title 40, CFR.

explosives safety. A condition where operational capability and readiness, people, property, and the environment are protected from the unacceptable effects or risks of potential mishaps involving DoD military munitions or other encumbering explosives or munitions.

(Added)(AF) explosives safety distance (quantity-distance). An expression of the quantity versus distance principle involved, or the toxic hazard distance used in determining acceptable separations between given explosives sources and given exposures to the hazard. For the purposes of this regulation, the term "Quantity-Distance" or "QD" will be used (see "quantity-distance").

(Added)(AF) explosives safety management. A cost-effective RM process, including policies, procedures, standards, engineering, and resources, that addresses potential probabilities and consequences of mishaps involving DoD military munitions or other encumbering explosives or munitions, to sustain operational capabilities and readiness and to protect people, property, and the environment.

(Added)(AF) explosives safety submission (ESS). See Munitions Response ESS (MRESS).

(Added)(AF) explosives site plan (ESP). May also be referred to as a QD Safety Submission (QDSS). Package consisting of all information necessary to assess compliance with explosives safety standards (especially QD standards) for explosives storage or operating location. Once approved, this package identifies storage and operational limitations, and provides a tool for management of risks associated with the storage or operating location. Note: An ESP can also be prepared for a non-explosives ES.

(Added)(AF) explosives sited CAPA. An aircraft parking area meeting both explosives safety and airfield criteria.

(Added)(AF) explosives storage area. A designated area of explosives-containing facilities set aside for the exclusive storage or "warehousing" of explosives stocks. Facilities include igloos, magazines, warehouses, operating buildings, modules, revetments, and outdoor storage pads.

(Added)(AF) exposed explosives. Explosives that are open to the atmosphere (such as unpackaged bulk explosives, or disassembled or open components) and that are susceptible to initiation directly by static or mechanical spark, or create (or accidentally create) explosive dust, or give off vapors, fumes, or gases in explosives concentrations. This also includes exudation and explosives exposed from damaged munitions such as gun powder or rocket motors.

extremely heavy case munitions. Military munitions having a cylindrical section case weight to explosive weight ratio greater than 9. Examples of extremely heavy case munitions are 16-inch projectiles and most armor piercing projectiles. (See the Fragmentation Database located on the DDESB secure Web page to determine if a specific item is an extremely heavy case munition.) For purposes of determining SG, extremely heavy case munitions are considered as robust munitions.

Faraday cage. An LPS where the area to be protected is enclosed by a heavy metal screen (similar to a birdcage) or continuous metallic structure with no unbonded metallic penetrations. Lightning current flows on the exterior of the structure, not through its interior.

Faraday-like shield. An LPS that is not an ideal Faraday cage, but is formed by a contiguous conductive matrix that is properly bonded and grounded (e.g., electrically continuous steel arches and reinforcing bars of concrete end-walls and floors of steel arch magazines, reinforcing bars of ECM, or the metal shell of prefabricated “portable” magazines and metal buildings).

(Added)(AF) field office. See "explosives operations office."

firebrand. A burning or hot projection that may transfer thermal energy to the surroundings.

(Added)(AF) firebreaks. An area free of all readily combustible material, such as dry grass, leaves, brush or dead wood.

(Added)(AF) fire resistive (structural). The type of construction where the structural members, including walls, partitions, columns, floor, and roof construction are of "noncombustible" materials that either do not burn or have specific fire resistance ratings in terms of hours.

(Added)(AF) fire retardant. Combustible materials or structures that have been treated or had surface coverings designed to retard ignition or fire spread.

(Added)(AF) fire wall. A wall separating buildings or subdividing a building to prevent the spread of fire and having a fire resistance rating and structural stability. (NFPA 221)

(Added)(AF) flightline munitions holding area. A designated area where munitions and components are temporarily positioned awaiting transfer to aircraft (e.g., Ready Service Igloo,

Ready Service Magazine, Ready Service Module, Standard Air Munitions Package marshaling area, and Aerial Port of Embarkation (APOE) marshaling area).

forward arming and refueling point (FARP). A temporary facility, organized, equipped, and deployed to provide fuel and AE necessary to support aviation maneuver units in combat. The FARP permits combat aircraft to rapidly refuel and rearm and is normally located in the main battle area closer to the area of operation than the aviation unit's combat service area.

(Added)(AF) fragment distance. The limiting range, based on a specific density of hazardous fragments, expected from the type and quantity of explosives involved. Used in establishing certain QD criteria, a fragment is considered hazardous when it has an impact energy of 58 foot-pounds or greater. Hazardous fragment density is a density of hazardous fragments exceeding one per 600 square feet.

fragmentation. Fracture of AE confining cases and structures as the result of an initiation.

fragmenting military munitions. Military munitions having cases that are designed to fragment (e.g., naturally fragmenting warheads, continuous rod warheads, items with scored cases, and military munitions that contain pre-formed fragments). (See also "SG.") For purposes of determining case fragment distances for intentional detonations, these military munitions are considered as robust munitions.

frost line. The depth to which frost will penetrate soil (region-dependent).

FUDS. Properties previously owned, leased, or otherwise possessed by the United States and under the jurisdiction of the Secretary of Defense.

(Added)(AF) gatehouse. A permanent facility used to control pedestrian and vehicular access manned by multiple personnel. Sometimes referred to as an entry control point (ECP) when used at the entrance for controlled or restricted areas. Gatehouses used at base entrances may be called traffic check houses or installation access control points and cannot be considered related to explosives operations (e.g., a structure used to house security response forces).

general public. Persons not associated with a DoD installation's mission or operations (e.g., visitors, guests of personnel assigned to the installation, or persons not employed or contracted by the DoD or the installation).

(Added)(AF) government assets. Government assets may include, but are not limited to, facility, ground support equipment, airborne vehicle equipment, real property, explosives, and other items owned by the DoD and its components. It also includes property owned by NASA or other government agencies.

grounding. The method used for providing an electrical path to the earth or to the earth electrode system. Good grounding is a function of the earth itself; temperature and moisture condition; an ionizing medium such as naturally occurring salts; or the volume of the earth electrode.

ground shock. Coupling of energy to the ground as a result of an AE reaction. Localized movement of the ground or structures in the vicinity will occur.

(Added)(AF) guard shelter. A location or facility used solely by the person guarding the PES or explosives area. It is a permanent or temporary structure providing protection from the weather for a single guard (e.g., a one-person structure used by someone guarding a nuclear weapons-loaded aircraft or munitions storage area).

HAS. A structure designed to minimize aircraft QD separation distances and yet provide a high level of aircraft protection. Defined as being one of these structure types addressed by this manual:

First Generation.

TAB VEE. 24-ft [7.3-m] radius semicircular arch, 48-ft [14.7-m] wide by 100.8-ft [30.7-m] long. Double corrugated steel liner covered by a minimum of 18 inches [45.7 centimeters (cm)] of reinforced concrete cover. Front closure is prow-shaped and is produced when two vertically hinged, recessed doors come together. (The closure is recessed approximately 20 ft [6.1 m] from the front of the arch, which provides a smaller internal space for aircraft.) 24-inch [61.0-cm] thick reinforced concrete rear wall, with an interior 0.1255-inch [0.3188-cm] thick steel spall plate. Rear wall has an exhaust opening (normally closed) for venting when engines are running. (Also known as USAFE (U.S. Air Forces in Europe) TAB VEE.)

TAB VEE Modified. 24-ft [7.3-m] radius semicircular arch, 48-ft [14.7-m] wide by 100.8-ft [30.7-m] long. Double corrugated steel liner covered by a minimum of 18 inches [45.7 cm] of reinforced concrete cover. Front closure is prow-shaped, laterally opening, external flush door. 24-inch [61.0 cm] thick reinforced concrete rear wall, with an interior 0.1255-inch [0.3188-cm] thick steel spall plate. Rear wall has an exhaust opening (normally closed) for venting when engines are running. (Same design as TAB VEE, except front closure door is redesigned and relocated to outside of arch.)

Second Generation. 29.4-ft [9.0-m] double-radius, pseudo-elliptical arch; 82-ft [25-m] wide by 124-ft [37.8-m] long. Double corrugated steel liner covered by a minimum of 18 inches [45.7 cm] of reinforced concrete cover. Front closure is a vertical reinforced concrete panel, laterally opening, sliding, external flush door. 24-inch [61.0-cm] thick reinforced concrete rear wall, with an interior 0.1255-inch [0.3188-cm] thick steel spall plate. Rear wall has an exhaust opening (normally closed) for venting when engines are running.

Third Generation. 27.4-ft [8.4-m] double-radius, pseudo-elliptical arch; 70.8-ft [21.6-m] wide by 120-ft [36.6-m] long. Double corrugated steel liner covered by a minimum of 18 inches [45.7 cm] of reinforced concrete cover. Front closure is a vertical reinforced concrete panel, laterally opening, sliding, external flush door. A personnel door is located out one side and is protected by a barricade. 24-inch [61.0-cm] thick reinforced concrete rear wall, with an interior 0.1255-inch [0.3188-cm] thick steel spall plate. Rear wall has an exhaust opening (normally closed) for venting when engines are running.

Korean TAB VEE. 24-ft [7.3-m] radius semicircular arch, 48-ft [14.7-m] wide by 100.8-ft [30.7-m] long (same dimensions and arch design as a First Generation). Double corrugated steel liner covered by a minimum of 18 inches [45.7 cm] of reinforced concrete cover. Either no front closure, or a non-hardened front closure. 18-inch [45.7-cm] thick reinforced concrete rear wall, with a 10-gauge (0.1382-inch) [3.51-mm] steel liner. Rear wall has an exhaust opening (normally closed) for venting when engines are running; exhaust opening is protected only by an exterior blast deflector earth-filled steel bin barricade.

Korean TAB VEE Modified. Same as a Korean TAB VEE, except a First Generation TAB VEE or TAB VEE Modified hardened front closure has been installed.

Korean Flow-Through. 27.4-ft [8.4-m] double-radius, pseudo-elliptical arch; 70.8-ft [21.6-m] wide by 120-ft [36.6-m] long (same dimensions and arch design as a Third Generation). Double corrugated steel liner covered by a minimum of 18 inches [45.7 cm] of reinforced concrete cover. Has an open front and rear.

HAS Pair. Two side-by-side HAS with a First, Second, or Third Generation arch design, separated by a minimum 6-inch [15.24-cm] air gap. The design may be a flow-through, or may have a rear wall, or a front and rear wall.

Maintenance HAS. A First, Second, or Third Generation HAS used for nonexplosive combat aircraft maintenance operations.

HAS ready service ECM/AGM. Facility intended to provide a holding area between HASs for quick-turn munitions. Limited to 22,000 lbs [9,979 kg] NEWQD (originally based on four quick-turn loads per HAS).

hazard classification. Process by which hazardous materials are assigned to one of the nine UN-recognized classes of dangerous goods.

hazardous fragment or debris. Fragments or debris having an impact energy of 58 ft-lbs [79 joule] or greater.

(Added)(AF) hazardous locations for electrical equipment. Locations where flammable gases or vapors are, or may be, present in an explosive or ignitable mixture, or where combustible dust or easily ignitable particles or fibers may be present.

(Added)(AF) hazardous operation (space launch). A specific operation requiring the establishment of a Safety Control Area; nonessential personnel will be evacuated from the Safety Control Area. Range Safety designates certain functions and procedures as hazardous operations when LSRM segments are being processed. Because these operations have a greater than normal potential for causing mishaps, certain controls are implemented. A solid rocket motor segment being lifted by a crane is an example of a hazardous operation. In addition to the activation of a Safety Control Area, these operations require supervision by people designated as the individuals responsible for safety standards compliance.

HDD. Distance at which the areal number density of hazardous debris becomes one per 600 square feet (ft^2) [55.7 square meters (m^2)].

headwall. An ECM's front wall. It is a critical feature that is directly associated with the strength designation assigned to an ECM.

heavy armor. Main battle tanks or other vehicles that are expected to contain fragments and reduce blast overpressure generated from an internal explosion of its AE stores.

HE equivalence. See "equivalent explosive weight."

HERO. Defined in Military Handbook MIL-HDBK-240A.

HD. A division or subdivision denoting the character and predominant hazard within UN Classes 1, 2, 4, 5, and 6.

HE. An explosive substance designed to function by detonation (e.g., main charge, booster, or primary explosive).

HFD. Distance at which the areal number density of hazardous fragments or debris becomes one per 600 ft^2 [55.7 m^2].

(Added)(AF) high explosives equivalent or TNT equivalent. The amount of a standard explosive, when detonated, will produce a blast effect comparable to the effect that results at the same distance from the detonation or explosion of a given amount of the material for which performance has been evaluated. It is usually expressed as a percentage of the total net weight of all reactive materials contained in the item or system. (For the purpose of this regulation, TNT is used for comparison.) See "equivalent explosive weight**".**

(Added)(AF) high performance magazine (HPM). An earth-bermed, two-story, box-shaped structure with internal non-propagation walls designed to reduce the MCE.

high-pressure closure. See "closure block."

holding yard. A temporary holding location for railcars, trucks, trailers, or shipping containers before storage or transportation.

HPM. An earth-bermed, 2-story, box-shaped structure with internal non-propagation walls designed to reduce the MCE.

hybrid propellant. A propellant charge using a combination of physically separated solid and liquid (or gelled) substances as fuel and oxidizer.

(Added)(AF) hybrid safety submission (HSS). An ESP containing waivers or exemptions to QD criteria. Once the Air Force accepts the risks associated with the QD deviations, the HSS will be forwarded to the DDESB for approval of the paired relationships meeting QD criteria.

hygroscopic. A tendency of material to absorb moisture from its surroundings.

hypergolic. A property of various combinations of chemicals to self-ignite upon contact with each other without a spark or other external initiation source.

IBD. Distance to be maintained between a PES and an inhabited building.

(Added)(AF) igloos (All Types). See "Earth-covered magazine."

IHF. A temporary storage facility designed to hold RCWM.

ILD. The distance to be maintained between any two AE-related buildings or sites within an AE related operating line.

IMD. Distance to be maintained between two AE storage locations.

(Added)(AF) improvised explosive device (IED). A weapon that is fabricated or emplaced in an unconventional manner incorporating destructive, lethal, noxious, pyrotechnic, or incendiary chemicals. Also called IED. (JP 3-15.1)

(Added)(AF) incapacitating agent. A chemical agent, which produces temporary disabling conditions that can be physical or mental and persist for hours or days after exposure to the agent has ceased. (JP 3-11)

(Added)(AF) incremental distance. The distance based solely on overpressure protection (K factor) without regard to fragment protection (e.g., for 5000 pounds NEWQD, the incremental K40/50 distance would be 685 feet instead of the 1,250 feet IBD separation required because of minimum fragment protection.)

(Added)(AF) inert. Contains no explosives, active chemicals, or pyrotechnics, but is not necessarily noncombustible.

inhabited buildings. Structures, other than AE-related buildings, occupied by personnel or the general public, both within and outside DoD establishments (e.g., schools, churches, residences, quarters, Service clubs, aircraft passenger terminals, stores, shops, factories, hospitals, theaters, mess halls, post offices, or post exchanges).

inspection station. A designated location at which trucks and railcars containing AE are inspected.

installation-related personnel. Military personnel (to include family members), DoD employees, DoD contractor personnel, and other personnel having either a direct operational (military or other federal personnel undergoing training at an installation) or logistical support (e.g., vendors) relationship with installation activities.

(Added)(AF) installed explosives. Explosives items installed on aircraft or contained in survival kits such as flares, signals, egress system components, squibs, and detonators for jettisoning external stores, engine-starter cartridges, fire extinguisher cartridges, destructors in electronic equipment, explosives components of emergency equipment, and other such items or materials necessary for safe flight operations.

(Added)(AF) integral air terminal LPS. LPS that has strike termination devices mounted on the structure to be protected. The strike termination devices are connected to the earth electrode system via down conductors.

(Added)(AF) integral part of a space launch facility. Any permanent structure or item in the immediate vicinity of the launch pad or test facility that directly supports launch or test operations.

(Added)(AF) integrated combat turnarounds. Defined in TO 00-25-172.

(Added)(AF) intentional burn or detonation. Burn or detonation of AE purposefully ignited or initiated in a planned sequence of events.

integral air terminal LPS. An LPS that has strike termination devices mounted on the structure to be protected. The strike termination devices are connected to the earth electrode system via down conductors.

interchange yard. An area on a DoD installation set aside for exchanging railroad cars or vehicles with a common carrier.

(Added)(AF) in-use ammunition. Ammunition required at the posted location or during roving patrols that is issued and available for immediate, lifesaving, security, or law enforcement situations.

JHCS. A database containing hazard classification and safety data for DoD AE.

joint DoD/non-DoD use runway or taxiway. A runway or taxiway serving both DoD and commercial aircraft. A runway or taxiway serving solely the DoD, DoD-chartered, or non-DoD aircraft on DoD authorized business is not joint use.

joint storage. AE storage in a facility that includes both DoD-titled and non-DoD-titled AE. In other than ownership, the stored AE items are similar.

(Added)(AF) joint use airfield. An airfield serving both DoD and commercial aircraft. An airfield serving solely DoD, DoD-chartered, or non-DoD aircraft on DoD-authorized business is not joint use. ATF, DOE, DEA, and other federal use aircraft are not considered commercial; therefore, joint use standards do not apply.

(Added)(AF) Joint Use Space Launch Facility. A space launch facility serving both governmental and authorized commercial users.

K-factor. The factor in the formula $D = KW^{1/3}$ used in QD determinations where D represents distance in ft and W is the NEW in lbs. The K-factor is a constant and represents the degree of protection that is provided.

(Added)(AF) launch complex. A group of facilities used to assemble, test, check out and launch spacelift vehicles. A launch complex must include two similar launch pads, ground liquid propellant tankage, solid rocket motor facilities, etc.

(Added)(AF) launch mount. The load bearing base, apron, or platform where the centerline of a rocket, missile, or space vehicle rests during launching.

launch pad. The load-bearing base, apron, or platform upon which a rocket, missile, or space vehicle and its launcher rest before launch.

(Added)(AF) license. Formal permission to store explosives or munitions outside the sited explosives storage area.

(Added)(AF) light construction (structure). Light metal structure or concrete masonry unit (block wall) construction without concrete fill or reinforcement (e.g., butler type buildings).

liquid propellant. Energetic liquids used for propulsion or operating power for missiles, rockets, AE, and other related devices.

loading density (w). Quantity of explosive per unit volume expressed as lbs/cubic feet (ft^3) [kg/cubic meter (m^3)].

loading docks. Facilities, structures, or paved areas used for transferring AE between modes of transportation.

long-term management. The period of site management (including maintenance, monitoring, record keeping, 5-year reviews, etc.) initiated after response (removal or remedial) objectives have been met (i.e., after Response Complete).

LUCs. Physical, legal, or administrative mechanisms that restrict the use of, or limit access to, real property, to manage risks to human health and the environment. Physical mechanisms encompass a variety of engineered remedies to contain or reduce contamination, or physical barriers to limit access to real property, such as fences or signs.

lunch room. A facility where meals may be distributed by food service personnel or brought by operating personnel for consumption. It may serve more than one PES.

magazine. Any building or structure used exclusively for the storage of AE.

(Added)(AF) magazine area. Same as "explosives storage area."

main operating base (MOB). Defined in Joint Publication 1-02.

marshalling yard. A designated area near a port facility where a unit or activity consolidates their equipment and prepares for movement.

(Added)(AF) mass detonating explosives. HE, black powder, certain propellants and pyrotechnics, and other similar explosives. They may be alone or in combination, or loaded into various types of ammunition or containers. Most of the entire quantity can explode instantaneously when a small portion is subjected to fire, to severe concussion or impact, to the impulse of an initiating agent, or to the effect of a considerable discharge of external energy. Such an explosion will generally cause severe structural damage to adjacent objects. The explosion may cause detonation of other items of AE stored near enough to (and not adequately protected from) the initially exploding pile, so that the two or more quantities must be considered as one for QD purposes.

mass explosion. Explosion that affects almost the entire quantity of AE virtually instantaneously.

mast LPS. An LPS consisting of one or more poles with a strike termination device connected to an earth electrode system by down conductors. Its purpose is to intercept lightning flashes and provide a zone of protection.

(Added)(AF) materials handling equipment (MHE). Equipment used at air, ground, and sea ports to handle large cargo.

MCE. In hazards evaluation, the MCE from a hypothesized accidental explosion, fire, or toxic CA release (with explosives contribution) is the worst single event that is likely to occur from a given quantity and disposition of AE.

The event must be realistic with a reasonable probability of occurrence considering the explosion propagation, burning rate characteristics, and physical protection given to the items involved.

The MCE evaluated on this basis may then be used as a basis for effects calculations and casualty predictions.

For HDs 1.2.1 and 1.2.3, the MCE is expressed as a weight that is the product of the NEWQD and either the number of AE that reacts virtually instantaneously in the Sympathetic Reaction or Liquid Fuel/External Fire tests, or the number of AE in three unpalletized, outer shipping packages.

The assigned MCE for a specific HD 1.2.1 or 1.2.3 item is listed in the JHCS.

MDAS. Defined in DoDI 4140.62.

MDEH. Defined in DoDI 4140.62.

MEC. A term distinguishing specific categories of military munitions that may pose unique explosives safety risks:

UXO, as defined in section 101(e)(5) of Title 10, U.S.C.;

DMM, as defined in section 2710(e)(2) of Title 10, U.S.C.; or

munitions consituent (e.g., TNT, cyclotrimethylenetrinitramine (RDX)), as defined in section 2710(e)(3) of Title 10, U.S.C., present in high enough concentrations to pose an explosive hazard.

MFD. The calculated maximum distance to which any fragment from the cylindrical portion of an AE case is expected to be thrown by the design mode detonation of a single AE item.

This distance does not address fragments produced by sections of nose plugs, base plates, boat tails, or lugs. These special fragments, from the non-cylindrical portions of the AE case, can travel to significantly greater distances (i.e., more than 10,000 ft [3,048 m]) than the calculated maximum distances.

The MFD may also be the measured distance, based on testing, to which any fragment from an AE item is thrown.

MGFD. The munition with the greatest fragment distance that is reasonably expected (based on research or characterization) to be encountered in any particular area.

military munitions. Defined in section 101(e)(4) of Title 10, U.S.C.

military munitions burial site. A site, regardless of location, where military munitions or CA, regardless of configuration, were intentionally buried, with the intent to abandon or discard.

This term includes burial sites used to dispose of military munitions or CA, regardless of configuration, in a manner consistent with applicable environmental laws and regulations or the national practice at the time of burial.

It does not include sites where munitions were intentionally covered with earth during authorized destruction by detonation, or where *in situ* capping is implemented as an engineered remedy under an authorized response action.

(Added)(AF) Military Munitions Response Program (MMRP). A DoD developed program addressing munitions-related concerns, including explosives safety, environmental, and health hazards from releases of UXO, discarded military munitions (DMM), and munitions constituents (MC) found at locations other than operational ranges on active and Base Realignment and Closure (BRAC) installations and Formerly Used Defense Sites (FUDS). The MMRP addresses non-operational range lands with suspected or known hazards from MEC occurring prior to

September 2002, but are not already included with an Installation Response Program (IRP) site cleanup activity.

(Added)(AF) mishap. An unplanned event, or series of events, which results in damage to Air Force property; injury to Air Force military personnel; injury to on-duty civilian personnel; occupational illness to Air Force military or civilian personnel; or damage to property, injury, or illness to non-Department of Defense personnel caused by Air Force operations. (AFPD 91-2)

mitigation. A feature that reduces, limits, or controls the consequences of an AE reaction.

MN operation. Defined in Joint Publication 1-02.

module. See "barricaded open storage module."

MPPEH. Defined in DoDI 4140.62.

MRA. Any area on a defense site that is known or suspected to contain UXO, DMM, or MC. Examples include former ranges and munitions burial areas. An MRA is comprised of one or more MRSs.

MRS. A discrete location within an MRA that is known to require a munitions response.

MSD. Minimum distance between a PES and personnel, assets, or structures required to provide the appropriate level of protection from a detonation (either intentional or unintentional) at the PES.

(Added)(AF) munition. A complete device charged with explosives; propellants; pyrotechnics; initiating composition; or chemical, biological, radiological, or nuclear material for use in operations including demolitions. (JP 3-42)

munitions constituent (MC). Defined in section 2710(e)(3) of Title 10, U.S.C.

munitions debris. Remnants of munitions (e.g., fragments, penetrators, projectiles, shell casings, links, fins) remaining after munitions use, demilitarization, or disposal.

(Added)(AF) Munitions MHE (MMHE). Powered or non-powered equipment specifically designed to interface with support munitions shipping, storing, assembly/disassembly, transporting, loading, or unloading operations. MMHE must be certified by either the nuclear certification board or NNMSB. Nuclear certified items are certified for nonnuclear use.

(Added)(AF) munitions residue. Includes scrap powder, initiating or sensitive explosives, sweepings from explosive operations, and explosive contaminated rags.

munitions response. Response actions, including investigation, removal actions, and remedial actions to address the explosives safety, human health, or environmental risks presented by

UXO, DMM, or MC, or to support a determination that no removal or remedial action is required.

(Added)(AF) munitions response chemical safety submission (MRCSS). MRCSSs address the potential effects of an inadvertent release of CA from a chemical munition, or a configuration that is not a munition, during munitions response activities (e.g., intrusive field work). MRCSSs involve either the intentional physical contact with MEC (i.e., chemical munitions) or CAs in other than munitions configurations, or the conduct of ground-disturbing or other intrusive activities in areas known or suspected to contain MEC or CAs in other than munitions configurations. When explosive hazards are known or suspected to exist along with CA hazards within a munitions response area (MRA) (e.g., the MRA or munitions response site), a submission that addresses both explosives and CA safety is required. (TP 26)

(Added)(AF) munitions response explosives safety submission (MRESS). MRESSs (formerly called explosives safety submissions) address explosives safety requirements for munitions responses (e.g., field activities) that involve either the intentional physical contact with MEC or the conduct of ground-disturbing or other intrusive activities in areas known or suspected to contain MEC. (TP 26) This is a DDESB approved document that ensures all applicable DoD explosives safety standards are specified prior to a military munitions response activity. The document details the scope of the project, the planned work activities, and potential hazards (including the MCE). It provides methods for controlling potential hazards to ensure MPPEH is remediated to a level that is safe for current or reasonably anticipated future land use.

(Added)(AF) munitions response explosives site plan. A plan required for MRS investigations or characterizations that involve intentional physical contact with MEC or CAs, regardless of CA configuration. MRS investigation and characterization are used to collect the information needed to design the required munitions response and to prepare, as appropriate, an MRESS or MRCSS for the selected response.

navigable streams. Those parts of streams, channels, or canals capable of being used in their ordinary or maintained condition as highways of commerce over which trade and travel are, or may be, conducted in the customary modes. Streams that are not capable of navigation by barges, tugboats, and other large vessels are not included, unless they are used extensively and regularly for the operation of pleasure boats.

NEQ. NEW expressed in kg.

NEW. The total weight of all explosives substances (i.e., HEW, propellant weight, and pyrotechnic weight) in the AE, expressed in lbs. NEW is used for transportation purposes.

NEWQD. The total weight, expressed in lbs [kg], of all explosive substances (HEW, propellant weight, and pyrotechnic weight) in the AE, unless testing has been conducted to support an approved different value due to the contribution of HEs, propellants, or pyrotechnics. For all HD 1.3 or 1.4 (other than CG S) AE, NEWQD is equal to NEW. NEWQD is used when applying QD and other criteria in this document.

(Added)(AF) new construction. For the intended purpose of this manual, "new construction" is the introduction of any facility "portable, temporary or permanent," inside the IB and must have an ESP accomplished and approved before authorizing construction or positioning in place.

nitrogen padding (or blanket). The nitrogen filled void or ullage of a closed container used to prevent oxidation or to avoid formation of a flammable mixture, or a nitrogen atmosphere in or around an operation or piece of equipment.

non-combustible construction. Construction that uses materials that do not readily ignite and burn when exposed to fire (e.g., concrete, masonry, and metal structures).

non-DoD entity. An entity (government, private, or corporate) that is not part of a DoD Component.

non-DoD explosives operations and storage. Explosives operations or storage conducted on DoD property, but not under DoD oversight. (See "DoD explosives operations and storage.")

non-essential personnel. Individuals who are not essential personnel (see definition of essential personnel).

(Added)(AF) non-explosives related facility. Air Force-owned facility where administrative functions or operations are conducted that provide direct support to an Air Force explosives area or explosives operation.

(Added)(AF) non-hazardous location. A location where fire or explosion hazards are not expected to exist specifically due to the presence of flammable gases or vapors, flammable liquids, combustible dusts, or ignitable fibers or filings.

non-robust munitions.

For purposes of determining SG, non-robust munitions are those HD 1.1 and HD 1.2 military munitions that are not categorized as SG 1, SG 3, SG 4, or SG 5. Examples of such munitions include torpedoes and underwater mines. (See also "SG.")

For purposes of determining case fragment distances for intentional detonations, non-robust munitions are those military munitions that do not meet the second definition (definition 2) of robust munitions.

(Added)(AF) nuclear weapon. A device designed to release energy in an explosive manner as a result of nuclear fission, nuclear fusion, or a combination of the two processes.

(Added)(AF) occupied facility. A facility where personnel are usually present. Includes maintenance facilities, field offices, administrative facilities, etc. An occupied facility may at any given time not have personnel present. (See unoccupied facility.)

OB. An open-air combustion process by which excess, unserviceable, or obsolete munitions are destroyed to eliminate their inherent explosive hazards.

OD. An open-air process used for the treatment of excess, unserviceable, or obsolete munitions whereby an explosive donor charge initiates the munitions being treated.

on-call construction support. Construction support provided, on an as-needed basis, where the probability of encountering UXO, other munitions that may have experienced abnormal environments (e.g., DMM), munitions constituent in high enough concentrations to pose an explosive hazard, or CA, regardless of configuration, has been determined to be low. This support can respond from offsite when called, or be onsite and available to provide required construction support.

one percent lethality distance. A distance calculated from a given CA MCE and meteorological conditions (temperature, wind speed, Pasquill stability factor) and established as the distance at which dosage from that MCE agent release would be 150 milligrams per minute (mg-min)/m^3 for H and HD agents, 75 mg-min/m^3 for HT agent, 150 mg-min/m^3 for L, 10 mg-min/m^3 for isopropyl methylphosphonofluoridate (GB) agent, 4.3 mg-min/m^3 for 0-ethyl S-[2-(diisopropylamino) ethyl] methylphosphonothioate (VX) vapor, and 0.1 mg-min/m^3 for inhalation and deposition of liquid VX.

on-site construction support. Dedicated construction support, where the probability of encountering UXO, other munitions that may have experienced abnormal environments (e.g., DMM), munitions constituent in high enough concentrations to pose an explosive hazard, or CA, regardless of configuration, has been determined to be moderate to high.

on-the-surface. A situation in which UXO, DMM, or CA, regardless of configuration, are either entirely or partially exposed above the ground surface (i.e., the top of the soil layer), or entirely or partially exposed above the surface of a water body (e.g., because of tidal activity).

operating building or location. Any site, facility, or structure, except a magazine, in which operations associated with AE are conducted (e.g., manufacturing, processing, handling, loading, or assembling).

operating line. A group of buildings, facilities, or related workstations so arranged as to permit performance of the consecutive steps of operations associated with AE (e.g., manufacture, loading, assembly, modification, or maintenance).

(Added)(AF) operating location. A building, facility, or site where operations pertaining to the manufacturing, processing, handling, or assembling of AE are done. This includes preload facilities for aircraft multiple and triple ejector racks. However, flightline explosives loading activities are defined as "explosives areas or locations" are not operating locations for siting purposes.

operational range. Defined in section 101(e)(3) of Title 10, U.S.C. and also includes:

Military range, as defined in section 266.201 of Title 40, CFR.

Active range, as defined in section 266.201 of Title 40, CFR.

Inactive range, as defined in section 266.201 of Title 40, CFR.

operational shield. A barrier constructed at a particular location or around a particular machine or operating station to protect personnel, material, or equipment from the effects of a localized fire or explosion.

ordnance. Explosives, chemicals, pyrotechnics, and similar stores (e.g., bombs, guns and ammunition, flares, smoke, or napalm).

(Added)(AF) outdoor storage. An open location selected within an explosives area or location for storage of explosive items or components.

(Added)(AF) overpressure. The pressure resulting from the blast wave of an explosion referred to as "positive" when it exceeds atmospheric pressure and "negative" during the passage of the wave when resulting pressures are less than atmospheric pressure. (JP 3-11)

packaging, inner and outer. Material used to surround and protect substances and articles during transportation and storage. They are generally made of lightweight materials such as fiberboard or fiberglass.

PAED. The longest distance of the HFD, IBD for overpressure, or the one percent lethality distance. For siting purposes, the PAED is analogous to the IBD for explosives; therefore, personnel not directly associated with the chemical operations are not to be allowed within the PAED.

passenger railroad. Any steam, diesel, electric, or other railroad that carries passengers for hire.

PES. The location of a quantity of AE that will create a blast, fragment, thermal, or debris hazard in the event of an accidental explosion of its contents.

pier. A landing place or platform built into the water, perpendicular or oblique to the shore, for the berthing of vessels.

portal barricade. A barricade placed in front of an entrance into an underground storage facility. Its function is to reflect that portion of the shock wave moving directly outward from the entrance, thereby, reducing the pressures along the extended tunnel axis and increasing the pressures in the opposite direction. The result is a more circular IBD area centered at the portal.

primary explosives. Highly sensitive compounds that are typically used in detonators and primers. A reaction is easily triggered by heat, spark, impact, or friction. Examples of primary explosives are lead azide and mercury fulminate.

primary fragment. A fragment from material in intimate contact with reacting AE.

prohibited area. A designated area at airfields, seadromes, or heliports where AE facilities are prohibited.

(Added)(AF) prompt propagation. See "Simultaneous Detonation."

(Added)(AF) Propagating Explosion. The communication of an explosion (detonation or deflagration) from one potential explosion site to another by fire, fragment, or blast (shock wave), where the interval between explosions is long enough to limit the total overpressure at any given time to that which each explosion produces independently. This condition, where detonation occurs, would be evidenced by a distinct shock wave from each detonation, with a discernible pressure drop between each explosion (see "simultaneous detonation").

propagation. Transfer of a reaction between AE.

PTR. Any public street, road, highway, navigable stream, or passenger railroad, including roads on a military reservation used routinely by the general public for through traffic.

PTRD. Distance to be maintained between a PES and a PTR exposure.

public exclusion distance. The calculated distance from the toxic CA source at which no more than 10.0, 4.3, and 150 mg-min/m^3 is present for GB, VX, and mustard, respectively, or the explosives safety IBD, whichever is greater.

(Added)(AF) public highway. Any public street, road, or highway used by the general public for vehicular traffic.

QD. The quantity of explosive material and distance separation relationships that provide defined levels of protection. The relationships are based on levels of risk considered acceptable for specific exposures and are tabulated in applicable QD tables. These separation distances do not provide absolute safety or protection. Greater distances than those in the QD tables should be used if practical.

(Added)(AF) QD safety submission (QDSS). See Explosives Site Plan (ESP).

qualified receiver. Defined in DoDI 4140.62.

quantitative risk assessment. Estimating the P_f (individual risk) and the expected number of fatalities (group risk) based on the product of the probability of the event, the P_f given the event, and the exposure, and comparing those risks with approved criteria.

(Added)(AF) radially aligned. Two missiles are radially aligned if the fragment pattern from either warhead intersect (90° angle) the other warhead.

range. Defined in section 101(e)(1) of Title 10, U.S.C.

range activities. Defined in section 101(e)(2) of Title 10, U.S.C.

range clearance. The destruction or removal and proper disposition of used military munitions (e.g., UXO and munitions debris) and other range-related debris (e.g., target debris, military munitions packaging and crating material) to maintain or enhance operational range safety or prevent the accumulation of such material from impairing or preventing operational range use. This does not include removal, treatment, or remediation of chemical residues or munitions constituents from environmental media, or actions to address DMM (e.g., burial pits) on operational ranges.

range-related debris. Debris, other than munitions debris, collected from operational ranges or from former ranges (e.g., target debris, military munitions packaging and crating material).

RCWM. CWM used for its intended purpose or previously disposed of as waste, which has been discovered during a CWM response or by chance (e.g., accidental discovery by a member of the public), that the DoD has either secured in place or placed under DoD control, normally in a DDESB-approved storage location or IHF, pending final disposition.

ready ammunition storage. A location where AE is stored for near-term tactical or training use.

(Added)(AF) ready service storage facility. Holding area for AE limited to a maximum NEW of 22,000 lbs, located between HASs.

real property. Lands, buildings, structures, utilities systems, improvements, and appurtenances thereto. Includes equipment attached to and made part of buildings and structures (such as heating systems) but not moveable equipment (such as plant equipment).

reduced QD magazine. A containment structure that through full-scale testing has demonstrated its ability to contain or significantly control explosion effects (i.e., fragmentation, overpressure, thermal) associated with an internal explosion involving 125 percent of the magazine's rated NEWQD capacity, and has been approved by the DDESB for application of reduced QD.

(Added)(AF) reinforced concrete walls. These concrete walls vary in thickness. They are constructed as specified in UFC 3-340-02.

(Added)(AF) related activity. Activities directly associated with munitions storage or operations.

(Added)(AF) related facility. Any non-explosives facility closely supporting a PES. It does not include utilities.

(Added)(AF) responsible commander. The commander(s) having responsibility for the resources under consideration.

(Added)(AF) revetment. Barricades constructed to limit or direct a blast to reduce damages from low flying fragments and limit simultaneous detonation. Often used to form modules for open storage of munitions or protected aircraft parking.

risk. The product of the probability or frequency that an accident will occur within a certain time and the accident's consequences to people, property or the environment.

(Added)(AF) risk assessment. A method of determining and documenting hazards that may be present and controls for mitigating or eliminating those hazards.

risk-based evaluation distance. The distance from a PES where P_f (individual risk) is equal to $1x10^{-8}$ for an individual present 24/7/365 in the open or IBD, whichever is greater (i.e., the distance from a PES within which all exposures [ES group] must be evaluated for a risk-based site plan).

robust munitions.

For purposes of determining SG, robust munitions are those HD 1.1 and HD 1.2 military munitions that meet two of the following criteria:

Have a ratio of the explosive weight to empty case weight less than 1.

Have a nominal wall thickness of at least 0.4 inches [10 mm].

Have a case thickness/$NEW^{1/3}$ greater than 0.05 inches/$lb^{1/3}$ [0.165 cm/$kg^{1/3}$]. Examples of robust munitions include 20-, 25-, and 30-mm cartridges, general purpose bombs, artillery projectiles, and penetrator warheads. (See also "SG.")

For purposes of determining case fragment distances for intentional detonations, robust munitions are those that meet the definition above or meet the definition of fragmenting military munitions. (See also "extremely heavy case munitions" and "fragmenting military munitions.")

rock strength. Designations (e.g., strong, moderately strong, or weak rock) providing a general classification of rock types.

RORO. An AE movement that is essentially an extension of the basic transportation process involving the movement, without lifting, of AE-laden wheeled conveyances into or from a transporter (e.g., a barge), such that the conveyances remain in a continuous transportation mode through a transshipment point.

RSP. The portion of EOD procedures that involves the application of special disposal methods or tools to interrupt the functioning or otherwise defeat the firing train of UXO from triggering an unacceptable detonation.

runway. Any surface on land designated for aircraft takeoff and landing operations, or a designated lane of water for takeoff and landing operations of seaplanes.

(Added)(AF) Safe Haven. Safe haven is the act of permitting a motor carrier engaged in the act of transporting DoD AA&E and related HAZMAT or other sensitive items to park an impacted motor vehicle in a designated parking area on a DoD activity in response to an emergency situation. Emergency conditions may include civil disturbances, natural disasters, mishaps, vehicle breakdowns, terrorist activity, driver illness, or other emergent contingencies. (DTR Part II, Chapter 205).

SD. The detonation of AE produced by the detonation of adjacent AE.

(Added)(AF) SD sensitive munitions. Munitions for which HPM non-propagation walls are ineffective. AE are assigned this category when either very sensitive to propagation or the sensitivity has not been determined.

secondary explosives. For the purposes of this document, secondary explosives are generally less sensitive to initiation than primary explosives and are typically used in booster and main charge applications. A severe shock is usually required to trigger a reaction. Examples are TNT, RDX or cyclonite, cyclotetramethylene-tetranitramine (also known as octogen), and tetryl.

secondary fragment. Fragments produced by the impact of primary fragments or airblast into surrounding structures, AE, or earth.

Secretarial exemptions or certifications. A written authorization granted by the Secretary of a Military Department for strategic or other compelling reasons that permits long-term noncompliance with a mandatory requirement of DoD explosives safety criteria.

secure explosives holding area. Defined in Chapter 205 of Defense Transportation Regulation 4500.9-R.

secure nonexplosives holding area. Defined in Chapter 205 of Defense Transportation Regulation 4500.9-R.

service magazine. A building of an operating line used for the intermediate storage of AE.

SG.

A category used to describe the susceptibility of HD 1.1 and HD 1.2 military munitions to SD for the purpose of storage within an HPM, or where ARMCO, Inc., revetments or SDWs are used to reduce MCE. Each HD 1.1 and HD 1.2 military munition is designated, based on its physical attributes, into one of five SGs, which can be found in the JHCS; directed energy weapons are further identified by assigning the suffix “D” following the SG designation. The SGs are:

SG 1 – robust munitions. (See “robust munitions.”)

SG 2 – non-robust munitions. (See "non-robust munitions.")

SG 3 – fragmenting military munitions. (See "fragmenting military munitions.")

SG 4 – CBU weapons. (See "CBU military munitions.")

SG 5 – SD sensitive military munitions. Munitions for which HPM non-propagation walls are not effective. Military munitions are assigned to SG 5 when either very sensitive to propagation or the sensitivity has not been determined.

For purposes of determining case fragment distances for intentional detonations, SG 1 items will be either robust or extremely heavy case munitions; SG 3 items are considered robust munitions; and SG 2, SG 4, and SG 5 military munitions are considered non-robust munitions.

shared launch facility. Any space or orbital launch facility supporting both DoD and non-DoD launch services and operations, as determined by the DoD Component involved or by mutual agreement when multiple DoD Components are involved.

ship or barge units. Combination of AE ships (including submarines at berth), barges, or piers or wharves not separated by required IMD.

sideflash. The phenomenon where lightning current will arc through a non-conductive medium in order to attach to other objects. An electrical spark caused by differences of potential that occurs between conductive metal bodies or between such metal bodies and a component of the LPS or earth electrode system.

(Added)(AF) simultaneous detonation. The detonation of two or more items that are near each other, with one item detonating after the next, and with such short intervals between detonations, that the overall detonation appears to have emanated from a single item. Pressures produced by these independent detonations grow together (coalesce) within very short distances from their sources to cause peak overpressures greater than that of each independent source. Preventing simultaneous detonation is equivalent to providing IMD.

single-chamber storage site. An excavated chamber with its own access to the natural ground surface that is not connected to any other storage chamber.

small arms ammunition. Ammunition, without projectiles that contain explosives (other than tracers), that is .50 caliber or smaller, or for shotguns.

source emission limits. The amount of toxic CA that may be released at a particular point that allows for natural dilution, ventilation, and meteorological conditions.

spall. The material broken loose from any surface of an acceptor chamber or cell by a shock wave transmitted through the wall. Spall is also used to describe this process.

(Added)(AF) staging for space launch. Staging of LSRM segments refers to a condition or configuration of the Solid Rocket Motor (SRM), while it remains in the Motor Operations and Staging Facility, until the launch complex is ready to receive it.

standoff distance. Minimum separation required between a wall or barrier and the edge of a stack of AE.

static missile battery. Deployed ground-based missiles meant to be employed in a non-mobile mission for offensive or defensive purposes.

static motor firing. Intentional ignition or initiation (via the design mode of ignition or initiation) of a motor (liquid or solid propellant) on a static test stand where the test item is restrained from becoming propulsive, or on a rail sled where propulsive movement of the test item is constrained to a defined path.

static test stand. Locations where liquid energetic engines or solid propellant motors are tested in place.

strike termination device or system. A component or feature of an LPS intended to intercept lightning strikes. They may include overhead wires or grids, air terminals, or a building's grounded structural elements.

support facilities. Facilities that support AE operations (e.g., field offices, AE support equipment maintenance, forklift charging stations, dunnage storage, or inert storage buildings).

surge suppression or protection. The attenuation, suppression, or diversion of lightning-induced electrical energy to ground.

suspect truck and railcar holding areas. A designated location for placing motor vehicles or railcars either containing AE that are suspected of being in a hazardous condition or motor vehicles or railcars that may be in a condition that is hazardous to the AE.

(Added)(AF) sympathetic detonation (SD). The detonation of AE produced by the detonation of adjacent AE.

tactical facilities. Prepared locations with an assigned combat mission (e.g., missile launch facilities, alert aircraft parking areas, or fixed gun positions).

taxiway. Any surface designated as such in the basic airfield clearance criteria specified by a DoD Component publication or Federal Aviation Regulation.

TCRA. Generally, removal actions where, based on the site evaluation, a determination is made that a removal is appropriate, and that fewer than 6 months exists before onsite removal activity must begin.

technology-aided surface removal. A removal of UXO, DMM, or CWM on the surface (i.e., the top of the soil layer) only, in which the detection process is primarily performed visually, but is augmented by technology aids (e.g., hand-held magnetometers or metal detectors) because vegetation, the weathering of UXO, DMM, or CWM, or other factors make visual detection difficult.

TNT equivalence. See "equivalent explosive weight."

toxic CA. A substance intended for military use with lethal or incapacitating effects on personnel through its chemical properties. Excluded from toxic CAs for purposes of this document are riot control agents, chemical herbicides, smoke- and flame-producing items, and individual dissociated components of toxic CA munitions.

toxic CA accident. Any unintentional or uncontrolled release of a toxic CA when:

Reportable damage occurs to property from contamination, or costs are incurred for decontamination.

Individuals exhibit physiological symptoms of toxic CA exposure.

The toxic CA quantity released to the atmosphere is such that a serious potential for exposure is created by exceeding the applicable AEL for unprotected workers or the general public or property.

toxic CA MCE. The hypothesized maximum quantity of toxic CA that could be accidentally released from AE without explosive contribution, bulk container, or process as a result of a single unintended, unplanned, or accidental occurrence. It must be realistic with a reasonable probability of occurrence.

toxic chemical munitions. Defined in section 1521 of Title 40, U.S.C.

(Added)(AF) transferred within or released from DoD control. A receiver has acknowledges receipt of MDEH or MDAS material by signed documentation (e.g., DD Form 1348-1A or an equivalent document) and takes physical custody of the MDEH or MDAS.

(Added)(AF) transportation mode. Any in-transit movement of explosives by any mode (rail, highway, air or water).

TSD. The distance that munitions response teams must be separated from each other during munitions response activities involving intrusive operations.

Ufer ground. An earth electrode system that consists of solid conductors encased along the bottom of a concrete foundation footing or floor and is in direct contact with earth.

underground storage facility. May consist of a single chamber or a series of connected chambers and other protective construction features. The chambers may be either excavated or natural geological cavities.

United States. The 50 States, the District of Columbia, the Commonwealths of Puerto Rico and the Northern Mariana Islands, the U.S. Virgin Islands, Guam, American Samoa, Johnston Atoll, Kingman Reef, Midway Island, Nassau Island, Palmyra Island, Wake Island, and any other territory or possession over which the United States has jurisdiction, and associated navigable waters, contiguous zones, and ocean waters of which the natural resources are under the exclusive management authority of the United States.

(Added)(AF) unoccupied facility. A facility where personnel are not usually present. Includes magazines, unmanned sewage treatment plants, HASs, etc. An unoccupied facility may at any given time have personnel present. (See occupied facility.)

(Added)(AF) utilities. Utilities include water, natural gas, steam, air lines, electrical lines, communication lines and environmental facilities or equipment. The term "utility" does not apply to services provided to individual or group explosives facilities when not also secondarily provided to other parts of the installation or community (this includes underground POL lines servicing HASs).

UXO. Defined in section 101(e)(5) of Title 10, U.S.C.

UXO-qualified personnel. Personnel who have performed successfully in military EOD positions, or are qualified to perform in the following Department of Labor, Service Contract Act, Directory of Occupations, contractor positions: UXO Technician II, UXO Technician III, UXO Safety Officer, UXO Quality Control Specialist, or Senior UXO Supervisor.

UXO technicians. Personnel who are qualified for and filling Department of Labor, Service Contract Act, Directory of Occupations, contractor positions of UXO Technician I, UXO Technician II, and UXO Technician III.

vent. Expose any internal cavities of MPPEH, to include training or practice munitions (e.g., concrete bombs), using DDESB or DoD Component-approved procedures, to confirm that an explosive hazard is not present.

vulnerable construction. Buildings of vulnerable construction (e.g., schools, high-rise buildings, restaurants, large warehouse-type retail stores) of which there are three main types:

Buildings of curtain wall construction that have four stories or more and are constructed with external non-load bearing panels on a separate sub-frame that are supported off the structural frame or floors for the full height of the building.

Buildings of largely glass construction that have four stories or more and have at least 50 percent of their wall areas glazed.

Any large building that employs non-load-bearing cladding panels.

waiver. A written authorization granted by the proper authority within a DoD Component for strategic or other compelling reasons that permits a temporary deviation from a mandatory requirement of DoD explosives safety criteria.

(Added)(AF) warehouse. These are facilities for storing material and supplies where personnel are infrequently present. The material may, or may not be associated with AE. Facilities must be sited as warehouses if they are used to store inert munitions components as part of the accountable munitions stockpile.

waste military munition. Defined in section 266.202 of Title 40, CFR.

wharf. A landing place or platform built into the water or along the shore for the berthing of vessels.

wharf yard. An AE area close to a pier or wharf where railcars or trucks are temporarily held in support of pier or wharf operations.

wholly inert. Those munitions (e.g., dummy) or munitions components (e.g., ogive, rotating band, adapter, lifting plugs) that have never contained reactive materials (i.e., explosives, CAs, or chemicals, such as pyrophoric chemicals). Once an inert item is employed as a component of a military munition, it may no longer be considered wholly inert.

wingwall. A wall located on either side of an ECM's headwall. It may slope to the ground or may join a wingwall from an adjacent ECM. It may be monolithic (of single construction) or separated by expansion joints from the headwall. The purpose of a wingwall is to retain the earth fill along the side slope of an ECM.

with its means of initiation. An AE item with its normal initiating device, such as a detonator or detonating fuze, assembled to it or packed with it, and this device is considered to present a significant risk during storage and transport, but not one great enough to be unacceptable.

without means of initiation.

An AE item without its normal initiating device assembled to it or packed with it.

An AE item packed with its initiating device, provided the device is packed so as to eliminate the risk of causing detonation of the AE item in the event of accidental functioning of the initiating device.

An AE item assembled with its initiating device, provided there are protective features such that the initiating device is very unlikely to cause detonation of the AE item under conditions that are associated with storage and transport.

For hazard classification purposes, a means of initiation that possesses two independent effective protective features is not considered to present a significant risk of causing the detonation of an AE item under conditions associated with storage and transport.

zone of protection. The space beneath the LPS that is substantially immune to direct lightning.

REFERENCES

(Added)(AF) AFMAN 10-1004, "Conducting Air Force Open Houses," August 23, 2018.

(Added)(AF) AFI 10-2501, "Air Force Emergency Management Program," March 10, 2020.

(Added)(AF) AFJI 11-204, "Operational Procedures for Aircraft Carrying Hazardous Materials," November 11, 1994.

(Added)(AF) AFI 11-209, "Participation in Aerial Events," May 22, 2018.

(Added)(AF) AFMAN 13-212V1, "Range Planning and Operations," June 22, 2018.

(Added)(AF) AFMAN 13-526, "Nuclear Airlift Operations," October 3, 2018.

(Added)(AF) AFMAN 15-129V2, "Air and Space Weather Operations--Exploitation," December 7, 2011.

(Added)(AF) AFI 21-101, "Aircraft and Equipment Maintenance Management," January 16, 2020.

(Added)(AF) AFMAN 21-201, "Munitions Management," March 26, 2019.

(Added)(AF) AFMAN 24-204, "Preparing Hazardous Materials for Military Air Shipments," July 13, 2017.

(Added)(AF) AFMAN 24-210 (DLAR 4145.41), "Packaging of Hazardous Material," April 20, 2015.

(Added)(AF) AFI 24-301, "Ground Transportation," October 22, 2019.

(Added)(AF) AFMAN 24-306, "Operation of Air Force Government Motor Vehicles," December 9, 2016.

(Added)(AF) AFI 24-602, Volume 2, "Cargo Movement," June 12, 2019.

(Added)(AF) AFI 31-101, "Integrated Defense," March 25, 2020.

(Added)(AF) AFI 31-121, "Military Working Dog Program," May 2, 2018.

(Added)(AF) AFMAN 31-129, "USAF Small Arms and Light Weapons Handling Procedures," January 2, 2020.

(Added)(AF) AFI 32-1023, "Designing and Constructing Military Construction Projects," November 19, 2015.

(Added)(AF) AFI 32-1065, "Grounding Systems," June 14, 2017.

(Added)(AF) AFMAN 32-1084, "Facility Requirements," January 15, 2020.

(Added)(AF) AFI 32-2001, "Fire and Emergency Services (F&ES) Program," September 28, 2018

(Added)(AF) AFMAN 32-3001, "Explosive Ordnance Disposal (EOD) Program," April 26, 2019.

(Added)(AF) AFI 32-7064, "Integrated Natural Resources Management," November 18, 2014.

(Added)(AF) AFI 32-9002, "Management of Real Property," August 3, 2017.

(Added)(AF) AFI 32-9003, "Granting Temporary Use of Air Force Real Property," October 24, 2018.

(Added)(AF) AFI 32-9004, "Disposal of Real Property," September 24, 2018.

(Added)(AF) AFI 32-10112, "Installation Geospatial Information and Services (IGI&S)," September 27, 2018.

(Added)(AF) AFI 33-360, "Publications and Forms Management," December 1, 2015.

(Added)(AF) AFMAN 33-322, "Records Management and Information Governance Program," March 23, 2020.

(Added)(AF) AFI 36-2654, "Combat Arms Program," January 13, 2016.

(Added)(AF) AFI 48-104, "Tobacco Free Living," July 11, 2019.

(Added)(AF) AFI 48-137, "Respiratory Protection Program," September 12, 2018.

(Added)(AF) AFI 63-125, "Nuclear Certification Program," January 16, 2020.

(Added)(AF) AFI 90-802, "Risk Management," April 1, 2019.

(Added)(AF) AFPAM 90-803, "Risk Management (RM) Guidelines and Tools," February 11, 2013.

(Added)(AF) AFI 91-101, "Air Force Nuclear Weapons Surety Program," March 26, 2020.

(Added)(AF) AFI 91-112, "Safety Rules for U.S./NATO Strike Fighters," August 29, 2018.

(Added)(AF) AFMAN 91-118, "Safety Design and Evaluation Criteria for Nuclear Weapon Systems," March 13, 2020.

(Added)(AF) AFPD 91-2, "safety Programs," September 3, 2019.

(Added)(AF) AFI 91-202, "The US Air Force Mishap Prevention Program," March 12, 2020.

(Added)(AF) AFMAN 91-203, "Air Force Occupational Safety, Fire, and Health Standards," December 11, 2018.

(Added)(AF) AFI 91-205, "Nonnuclear Munitions Safety Board," May 23, 2018.

(Added)(AF) AFI 91-208, "Hazards of Electromagnetic Radiation to Ordnance (HERO) Certification and Management," October 24, 2019.

(Added)(AF) Air Force Visual Aid (AFVA) 91-216, "USAF Explosives Fire and Chemical Hazard Symbols," April 4, 2012.

(Added)(AF) AFTTP 3-4, "Airman's Manual," January 11, 2019.

(Added)(AF) Allowance Standard 016, "Special Purpose Clothing and Personal Equipment," current edition.

American Society of Mechanical Engineers, Boiler and Pressure Vessel Code, "Section VIII, Rules for Construction of Pressure Vessels, Division 1/Division 2," current edition[1]

(Added)(AF) ANSI Safety Code A156.3, "Exit Devices," current edition.

Army Technical Bulletin 700-2/Naval Sea Systems Command Instruction 8020.8C/Technical Order 11A-1-47, "Department of Defense Ammunition and Explosives Hazard Classification Procedures," July 30, 2012

(Added)(AF) Bureau of Explosives Pamphlet, No. 6. "Illustrating Methods for Loading and Bracing Carload and Less than Carload Shipments of Explosives and other Hazardous Materials," 1976 edition.

[1] Copies may be obtained from ASME International, 22 Law Drive, Box 2900, Fairfield, NJ 07007-2900; Phone: 800-843-2763; International: 973-882-1167; Fax: 973-882-1717

(Added)(AF) Bureau of Explosives Pamphlet No. 6A, "Illustrating Approved Methods for Loading and Bracing Carload Shipments of Military Ammunition and Explosives," 1976 edition.

(Added)(AF) Bureau of Explosives Pamphlet No. 6C, "Intermodal Loading Guide for Products in Closed Trailers and Containers," January 2016 edition.

Chairman of the Joint Chiefs of Staff Instruction 4360.01A, "Explosives Safety and Munitions Risk Management for Joint Operations Planning, Training, and Execution," August 15, 2014

(Added)(AF) Chairman of the Joint Chiefs of Staff Instruction 4360.01B, "Explosives Safety and Munitions Risk Management for Joint Operations Planning, Training, and Execution," August 31, 2018.

Code of Federal Regulations, Title 14, Part 77

Code of Federal Regulations, Title 29, Section 1910.106

Code of Federal Regulations, Title 40

Code of Federal Regulations, Title 49

(Added)(AF) Data Item Description (DID) DI-SAFT-80931, "Explosive Ordnance Disposal Data," May 15, 2003.

Defense Transportation Regulation 4500.9-R-Part II, "Cargo Movement," May 2014, as amended

(Added)(AF) Defense Transportation Regulation 4500.9-R-Part III, "Mobility," June 2016, as ameneded.

Department of Defense Explosives Safety Board, Technical Paper 10, Change 3, "Methodology for Chemical Hazard Prediction," June 1980[2]

Department of Defense Explosives Safety Board, Technical Paper 13, "Prediction of Building Debris for Quantity-Distance Siting," April 1991[3]

Department of Defense Explosives Safety Board Technical Paper 14, Revision 4, "Approved Methods and Algorithms for DoD Risk-Based Explosives Siting," July 21, 2009

Department of Defense Explosives Safety Board, Technical Paper 15, Revision 3, "Approved Protective Construction," May 2010

Department of Defense Explosives Safety Board, Technical Paper 16, "Methodologies for Calculating Primary Fragment Characteristics," August 2, 2012[4]

Department of Defense Explosives Safety Board, Technical Paper 17, "DDESB Blast Effects Computer Version 6 User's Manual and Documentation," March 10, 2005[5]

---

2 Available at https://www.ddesb.pentagon.mil/products/Handler.ashx?ID=24

3 Available at https://www.ddesb.pentagon.mil/products/Handler.ashx?ID=27

4 Available at https://www.ddesb.pentagon.mil/documents/TechnicalPapers.aspx (secure login required)

5 Available at https://www.ddesb.pentagon.mil/documents/TechnicalPapers.aspx (requires a secure login)

Department of Defense Explosives Safety Board, Technical Paper 18, “Minimum Qualifications for Unexploded Ordnance (UXO) Technicians and Personnel,” December 20, 2004

Department of Defense Explosives Safety Board Technical Paper 19, Revision 1, “User’s Reference Manual for the Safety Assessment for Explosives Risk Software,” July 21, 2009

DoD 5400.11-R, “Department of Defense Privacy Program,” May 14, 2007

(Added)(AF) DoD Directive 1100.20, "Support and Services for Eligible Organizations and Activities Outside the Department of Defense," April 12, 2004.

(Added)(AF) DoD Directive 3025.18, "Defense Support of Civil Authorities (DSCA)," December 29, 2010, as amended.

DoD Directive 5134.01, “Under Secretary of Defense for Acquisition, Technology, and Logistics (USD(AT&L)),” December 9, 2005, as amended

(Added)(AF) DoD Directive (DoDD) 5160.62, "Single Manager Responsibility for Military Explosive Ordnance Disposal Technology and Training (EODT&T)," June 3, 2011.

DoD Directive 6055.09E, “Explosives Safety Management (ESM),” November 18, 2016

DoD Directive S-3325.01, “Foreign Materiel Program (FMP) (U),” December 30, 2011

(Added)(AF) DoD Instruction 3000.12, "Management of U.S. Global Defense Posture (GDP)," May 6, 2016.

DoD Instruction 3222.03, “DoD Electromagnetic Environmental Effects (E3) Program,” May 25, 2014, as amended

DoD Instruction 4140.62, “Material Potentially Presenting an Explosive Hazard (MPPEH),” August 20, 2015

(Added)(AF) DoD Instruction 4160.28, "DoD Demilitarization (DEMIL) Program," April 7, 2011.

DoD Instruction 4165.72, “Real Property Disposal,” December 21, 2007

(Added)(AF) DoD Instruction 4715.05, "Environmental Compliance At Installations Outside the United States," November 1, 2013.

DoD Instruction 4715.07, “Defense Environmental Restoration Program (DERP),” May 21, 2013

(Added)(AF) DoD Instruction 5100.76, "Safeguarding Sensitive Conventional Arms, Ammunition, and Explosives (AA&E)," February 28, 2014.

DoD Instruction 6055.01, “DoD Safety and Occupational Health (SOH) Program,” October 14, 2014

DoD Instruction 6055.05, “Occupational and Environmental Health (OEH),” November 11, 2008

DoD Instruction 6055.07, “Mishap Notification, Investigation, Reporting, and Record Keeping,” June 6, 2011

DoD Instruction 6055.16, “Explosives Safety Management Program,” July 29, 2008, as amended

DoD Instruction S-3325.04, “Implementation of the Foreign Material Program (FMP) (U),” February 12, 2015

(Added)(AF) DoD Instruction 8130.01, "Installation Geospatial Information and Services," April 9, 2015.

(Added)(AF) DoD 3150.02-M, "DoD Nuclear Weapon System Safety Program Manual," Janjuary 31, 2014.

DoD Manual 4715.20, "Defense Environmental Restoration Program (DERP) Management," March 9, 2012

(Added)(AF) DoD Manual 4715.26, "DoD Military Munitions Rule (MR) Implementation Procedures," April 25, 2017.

DoD Manual 5100.76, "Physical Security of Sensitive Conventional Arms, Ammunition, and Explosives (AA&E)," April 17, 2012

DoD Manual 8910.01, Volume 1, "DoD Information Collections Manual: Procedures for DoD Internal Information Collections," June 30, 2014

DoD S-5210.41-M-V1, "Nuclear Weapon Security Manual: The DoD Nuclear Weapon Security Program (U)," July 13, 2009

Federal Standard 595C, "Colors Used in Government Procurement," December 15, 1989, as amended [6]

General Services Administration (GSA), "2015 Global Supply Annual Catalog (05-14-00121)," January 21, 2014[7]

(Added)(AF) International Council of Airshows, "Pyrotechnics and Special Effects for Air Shows," January 14, 2016.

Joint Publication 1-02, "Department of Defense Dictionary of Military and Associated Terms," current edition

(Added)(AF) Joint Publication 3-11, "Operations in Chemical Biological Radiological and Nuclear Environments," October 29, 2018.

(Added)(AF) Joint Publication 3-15.1, "Counter-Improvised Explosive Device Activities," July 17, 2018.

Joint Publication 3-16, "Multinational Operations," July 16, 2013

(Added)(AF) Joint Publication 3-42, "Joint Explosive Ordnance Disposal," September 9, 2016.

(Added)(AF) Joint Publication 5-0, "Joint Planning," June 16, 2017.

Military Handbook MIL-HDBK-237D, "Department of Defense Handbook: Electromagnetic Environmental Effects and Spectrum Supportability Guidance for the Acquisition Process," May 20, 2005[8]

Military Handbook MIL-HDBK-240A, "Department of Defense Handbook: Hazards of Electromagnetic Radiation to Ordnance (HERO) Test Guide," March 10, 2011[9]

---

6 Available at http://www.gsa.gov/portal/content/142623

7 Available at http://www.gsa.gov/portal/content/104686

8 Copies may be obtained from the Internet at http://everyspec.com/MIL-HDBK/MIL-HDBK-0200-0299/MIL-HDBK-237D_21777/

9 Available at http://everyspec.com/MIL-HDBK/MIL-HDBK-0200-0299/MIL-HDBK-240A_32066/

(Added)(AF) MIL-STD-129, "MIL STD 129R Military Marking for Shipment and Storage," February 18, 2014.

Military Standard MIL-STD-398A, "Shields, Operational for Ammunition Operations, Criteria for Design of and Tests for Acceptance," January 29, 2014[10]

Military Standard MIL-STD-882E, "Department of Defense Standard Practice for System Safety," May 11, 2012

Military Standard MIL-STD-1474E, "Noise Limits," April 15, 2015[11]

(Added)(AF) "Munitions Rule (MR)," Federal Register, Volume 62, page 6621, February 12, 1997.

(Added)(AF) National Fire Protection Association 1, "Fire Code," current edition.

(Added)(AF) National Fire Protection Association 13, "Standard for the Installation of Sprinkler Systems," current edition.

(Added)(AF) National Fire Protection Association 16, "Standard for the Installation of Foam-Water Sprinkler and Foam-Water Spray Systems," current edition.

National Fire Protection Association 30, "Flammable and Combustible Liquids Code," current edition[12]

National Fire Protection Association 55, "Compressed Gases and Cryogenic Fluids Code," current edition[12]

(Added)(AF) National Fire Protection Association 58, "Liquefied Petroleum Gas Code," current edition.

National Fire Protection Association 70, "National Electrical Code®," current edition[12]

(Added)(AF) National Fire Protection Association 77, "Recommended Practice on Static Electricity," current edition.

(Added)(AF) National Fire Protection Association 80, "Standard for Fire Doors and Other Opening Protectives," current edition.

(Added)(AF) National Fire Protection Association 90A, "Standard for Installation of Air-Conditioning and Ventilating Systems," current edition.

(Added)(AF) National Fire Protection Association 90B, "Standard for Installation of Warm Air Heating and Air-Conditioning Systems," current edition.

(Added)(AF) National Fire Protection Association 91, "Standard for Exhaust Systems for Air Conveying of Vapors, Gases, Mists, and Particulate Solids," current edition.

(Added)(AF) National Fire Protection Association 101, "Life Safety Code®," current edition.

(Added)(AF) National Fire Protection Association 221, "Standard for High Challenge Fire Walls, Fire Walls, and Fire Barrier Walls," current edition.

---

[10] Available at http://everyspec.com/MIL-STD/MIL-STD-0300-0499/MIL-STD-398A_50216/

[11] Available at http://everyspec.com/MIL-STD/MIL-STD-1400-1499/MIL-STD-1474E_52224/

[12] Copies available at National Fire Protection Association, 1 Batterymarch Park, Quincy, MA 02169-7471; Phone: 617-770-3000; Fax: 617-770-0700

National Fire Protection Association 251, “Standard Methods of Tests of Fire Resistance of Building Construction and Materials,” current edition[12]

(Added)(AF) National Fire Protection Association 400, "Hazardous Material Code," current edition.

National Fire Protection Association 430, “Code for the Storage of Liquid and Solid Oxidizers,” current edition[12]

(Added)(AF) National Fire Protection Association 652, "Standard on the Fundamentals of Combustible Dust," current edition.

National Fire Protection Association 780, “Standard for the Installation of Lightning Protection Systems,” current edition[12]

(Added)(AF) National Fire Protection Association 1123, "Code for Fireworks Display," current edition.

(Added)(AF) National Fire Protection Association 1142, "Standard on Water Supplies for Suburban and Rural Fire Fighting," current edition.

North Atlantic Treaty Organization, Allied Ammunition Storage and Transport Publication (AASTP)-1, “Manual of NATO Safety Principles for the Storage of Military Ammunition and Explosives,” May 2010[13]

North Atlantic Treaty Organization, Allied Ammunition Storage and Transport Publication (AASTP)-5, “NATO Guidelines for the Storage, Maintenance and Transport of Ammunition on Deployed Missions or Operations,” June 2012[14]

(Added)(AF) Technical Manual (TM) 5-630, "Natural Resources Land Management," July 1982.

(Added)(AF) Technical Order 00-5-1, "AF Technical Order System," July 16, 2018.

(Added)(AF) Technical Order 00-5-3, "Air Force Technical Order Life Cycle Management," June 4, 2018.

(Added)(AF) Technical Order 00-25-172, "Ground Servicing of Aircraft and Static Grounding/Bonding," Setpember 6, 2019.

(Added)(AF) Technical Order 00-80G-1, "Make Safe Procedures for Public Static Display," April 15, 2016.

(Added)(AF) Technical Order 11-1-38, "Positioning and Tie-Down Procedures – Nonnuclear Munitions," January 15, 2020.

(Added)(AF) Technical Order 11A-1-10, "Air Force Munitions Surveillance Program and Serviceability Procedures," July 21, 2014.

(Added)(AF) Technical Order 11A-1-33, "Handling and Maintenance of Explosives-Loaded Aircraft," February 25, 2019.

---

[13] Available at http://www.rasrinitiative.org/pdfs/AASTP-1-Ed1-Chge-3-Public-Release-110810.pdf
[14] Available at http://nso.nato.int/nso/zPublic/ap/AASTP-05(1)v2PU.pdf

(Added)(AF) Technical Order 11A-1-53, "General Instructions Ammunitions Color Coding, Identification of Empty and Inert Ammunition Items and Components, and Assignment of Version Numbers to Training and Dummy Ammunition Items," October 30, 2019.

(Added)(AF) Technical Order 11A-1-60, "General Instructions Inspection of Reusable Munitions Containers and Scrap Material Generated From Items Exposed To, or Containing Explosives," November 27, 2018.

(Added)(AF) Technical Order 11N-B83-1A, "Assembly, Test, Maintenance, and Storage Procedures with Illustrated Parts Breakdown; B83-0/-1," October 23, 2019.

(Added)(AF) Technical Order 11N-20-7, "Nuclear Safety Criteria (U)," October 21, 2019.

(Added)(AF) Technical Order 11N-20-11, "General Guidance and Material Hazard Information for Nuclear Weapons, Components and Nonnuclear Weapon Designations (U)," October 21, 2016.

(Added)(AF) Technical Order 11N-45-51, "Transportation of Nuclear Materiel; General Shipping and Limited Life Component (LLC) Data," May 1, 2018.

(Added)(AF) Technical Order 11N-50-1007, "Transportation Maintenance System Operator/User Manual A/S32U-42 and A/S32U-43," current edition.

(Added)(AF) Technical Order 11N-50-1010-1, "Secure Transportable Maintenance System, Operator/User Manual," current edition.

(Added)(AF) Technical Order 36-1-191, "Technical and Managerial Reference for Motor Vehicle Maintenance," February 7, 2019.

(Added)(AF) Technical Order 38-1-23, "Inspection and Installation of Exhaust Spark Arrestors and Exhaust Purifiers (Catalytic Mufflers) on Non-Aircraft Engines," June 15, 1991.

(Added)(AF) Technical Order 60A-1-1-4, "Protections of Personnel and Property," current edition.

U.S. Army Armament and Research and Development Command Publication (Contractor Report No. ARLCD-CR-80049, Government Accession No. A-095-040), "Engineering Guide for Fire Protection and Detection Systems at Army Ammunition Plants, Volume I, Selection and Design," December 30, 1980[15]

U.S. Army Chemical Research, Development and Engineering Center Publication, Report No. CRDEC-TR-87021 (Government Accession No. A-177-622), "Personal Computer Program For Chemical Hazard Prediction (D2PC)," January 1987[16]

U.S. Army Corps of Engineers Report HNC-EDC-S-13-10, "Guide for Evaluating Blast Resistance of Undefined Arch-Type Earth-Covered Magazines," May 2013[17]

U.S. Army Tank and Automotive Command-Armament Research, Development and Engineering Center Logistics Research and Development Activity, "Technical Data Package

[15] Available at http://www.dtic.mil/cgi-bin/GetTRDoc?AD=ADA095040&Location=U2&doc=GetTRDoc.pdf

[16] Available at http://www.dtic.mil/cgi-bin/GetTRDoc?AD=ADA177622&Location=U2&doc=GetTRDoc.pdf

[17] Available at http://www.dtic.mil/dtic/tr/fulltext/u2/a608633.pdf

for Ammunition Storage Quantity-Distance Reduction with Concertainer Barricades," October 22, 2002, as amended[18]

Under Secretary of Defense for Acquisition, Technology, and Logistics Memorandum, "Radio Frequency Identification (RFID) Policy," July 30, 2004

(Added)(AF) Unified Facilities Criteria 3-260-01, "Airfield and Heliport Planning and Design," November 17, 2008.

Unified Facilities Criteria 3-340-02, "Structures to Resist the Effects of Accidental Explosions," December 5, 2008, as amended[19]

(Added)(AF) Unified Facilities Criteria 3-575-01, "Lightning and Static Electricity Protection Systems," July 1, 2012.

(Added)(AF) Unified Facilities Criteria 3-600-01, "Fire Protection Engineering for Facilities," August 8, 2016.

(Added)(AF) Unified Facilities Criteria 4-010-01, "DoD Minimum Antiterrorism Standards for Buildings," December 12, 2018.

United Nations Publication ST/SG/AC.10/1, Volumes I and II, "UN Recommendations on the Transport of Dangerous Goods – Model Regulations," current edition[20]

United States Code, Title 10

United States Code, Title 42

United States Code, Title 50, Section 1512

Wilton, C., "Investigation of the Explosive Potential of the Hybrid Propellant Combinations N_2O_4/PBAN and CTF/PBAN," AFRPL-TR-67-124, 1967 (AD A003 595)[21]

Zabetakis, M. G. and Burgess, D. S., "Research on the Hazards Associated With the Production and Handling of Liquid Hydrogen," U.S. Department of the Interior, Bureau of Mines Report 5707, 1961[22]

---

[18] Available at https://acc.dau.mil/CommunityBrowser.aspx?id=239302 (AKO login required)

[19] Available at http://www.wbdg.org/FFC/DOD/UFC/ufc_3_340_02_2008_c2.pdf

[20] Available at http://www.unece.org/trans/danger/publi/unrec/mr_pubdet.html

[21] Copies may be obtained from Defense Technical Information Center, Fort Belvoir, VA; Phone: 800-225-3842

[22] Copies may be obtained from Chemical Propulsion Information Analysis Center (CPIAC) Accession Number 1964-0291, CPIA, The Johns Hopkins University, 10630 Little Patuxent Parkway, Suite 202, Columbia, MD 21044-3204; Phone: 410-992-7300.

(ADDED)(AF) FORMS ADOPTED

(Added)(AF) AF Form 847, "Recommendation for Change of Publication," September 21, 2009.

(Added)(AF) AF Form 2047, "Explosives Facility License," May 30, 2013.

(Added)(AF) DD Form 626, "Motor Vehicle Inspection (Transporting Hazardous Material)," October 1, 2011.

(Added)(AF) DD Form 1348-1A, "Issue Release/Receipt Document," July 1, 1991.

(Added)(AF) DD Form 2890, "DoD Multimodal Dangerous Goods Declaration," September 1, 2015.