NOSE LG SEQUENCE CONTROL PANEL

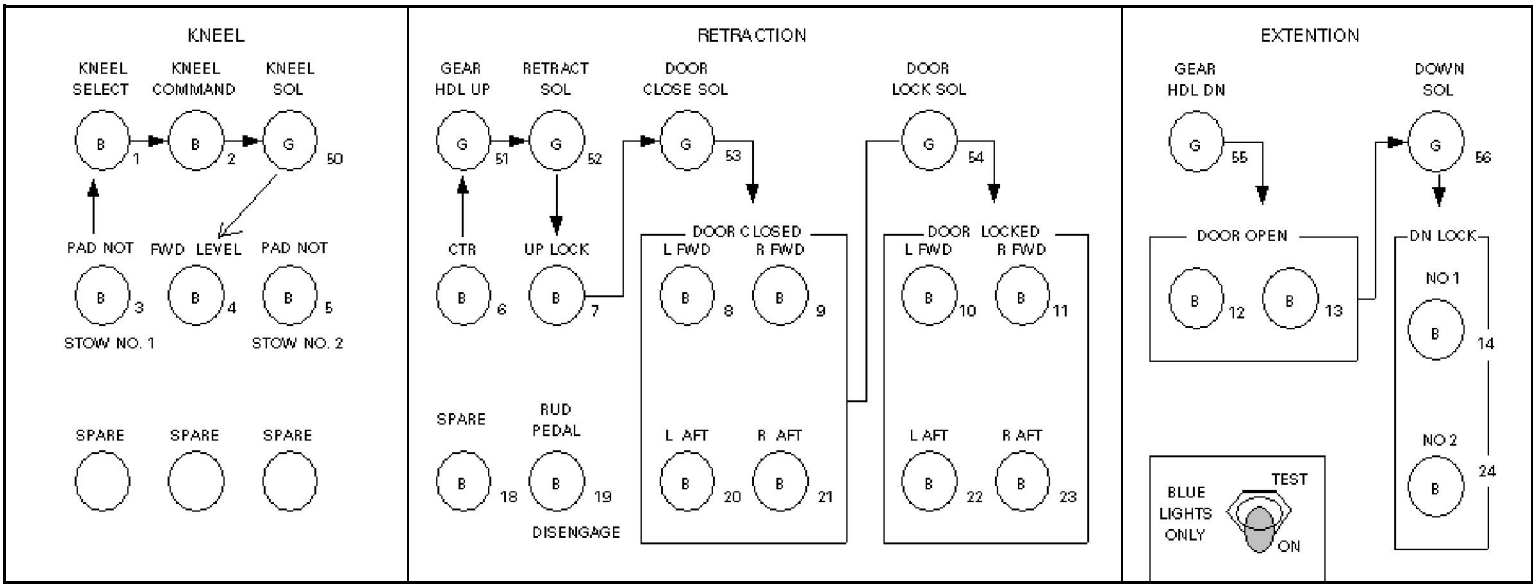

LH MLG SEQUENCE CONTROL PANEL *(Not Modified by TCTO 1C-5A-1984)*

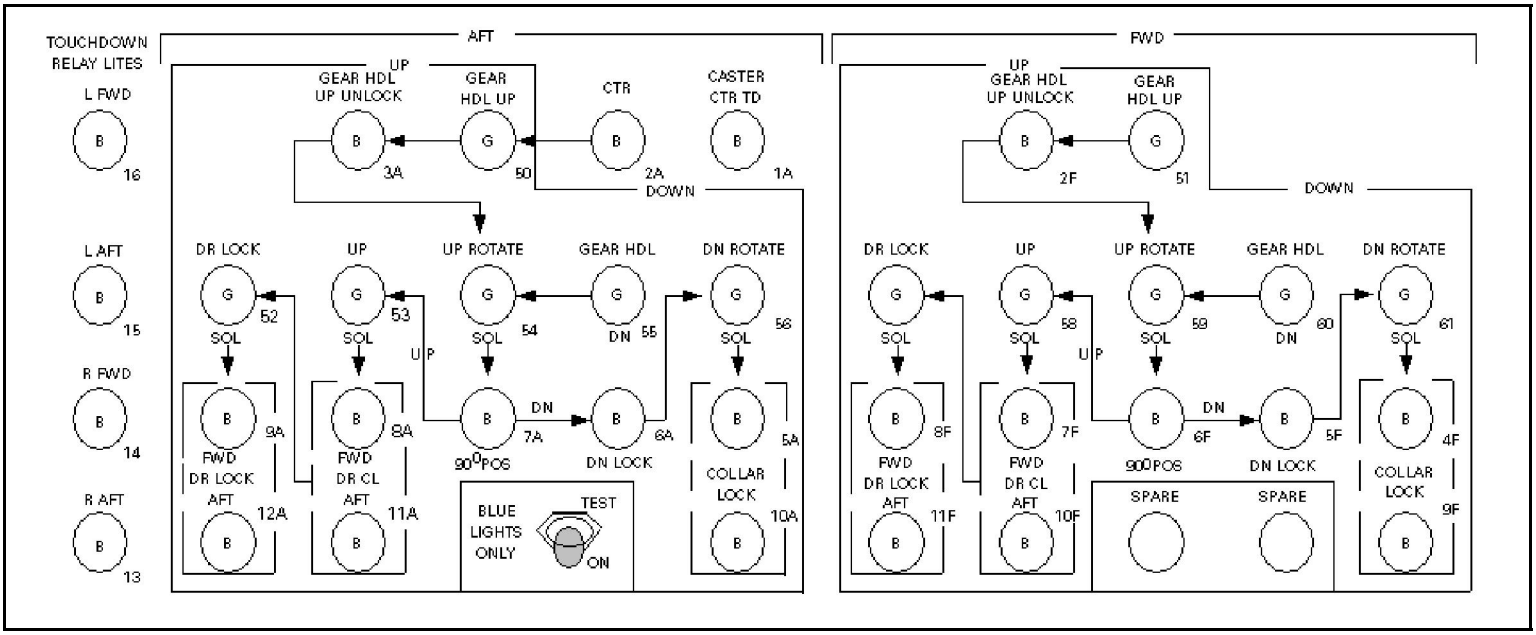

RH MLG SEQUENCE CONTROL PANEL *(Not modified by TCTO 1C-5A-1984)*

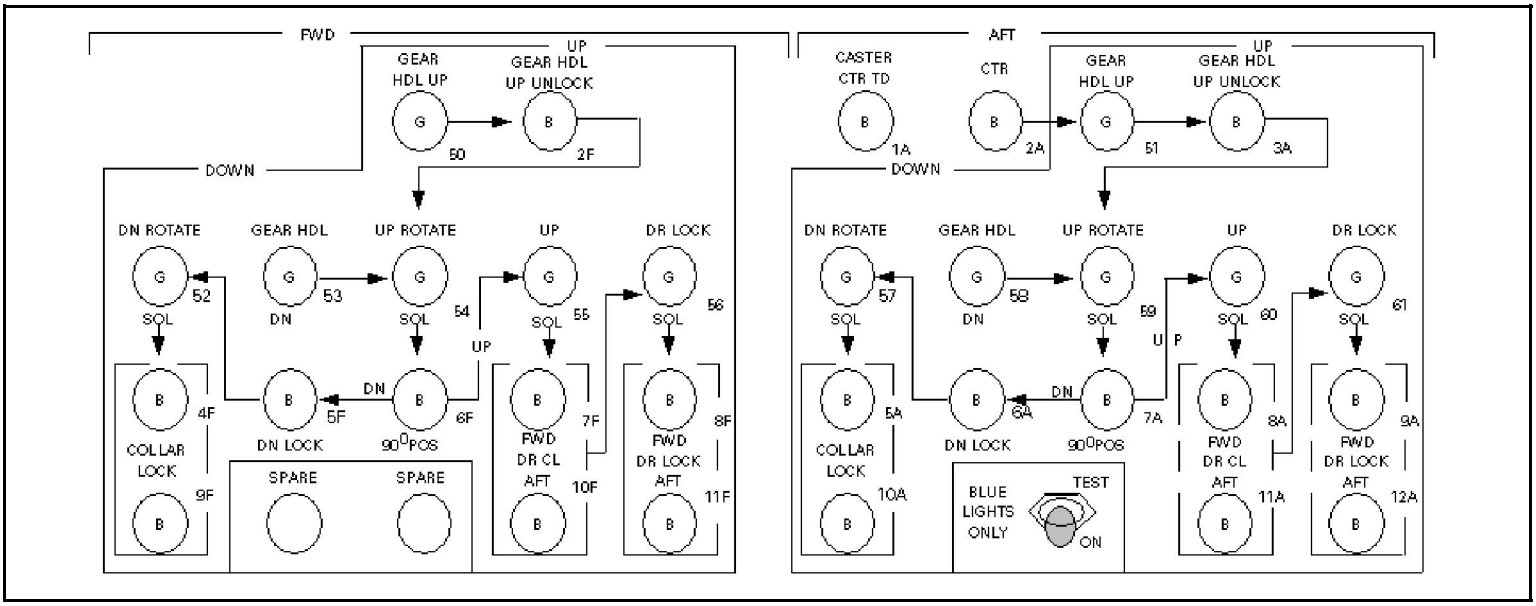

RELAY LOGIC LANDING GEAR MALFUNCTIONS

Replaces (AMC) MC Form 41, Oct 96 which is obsolete.

NOSE LG SEQUENCE CONTROL PANEL

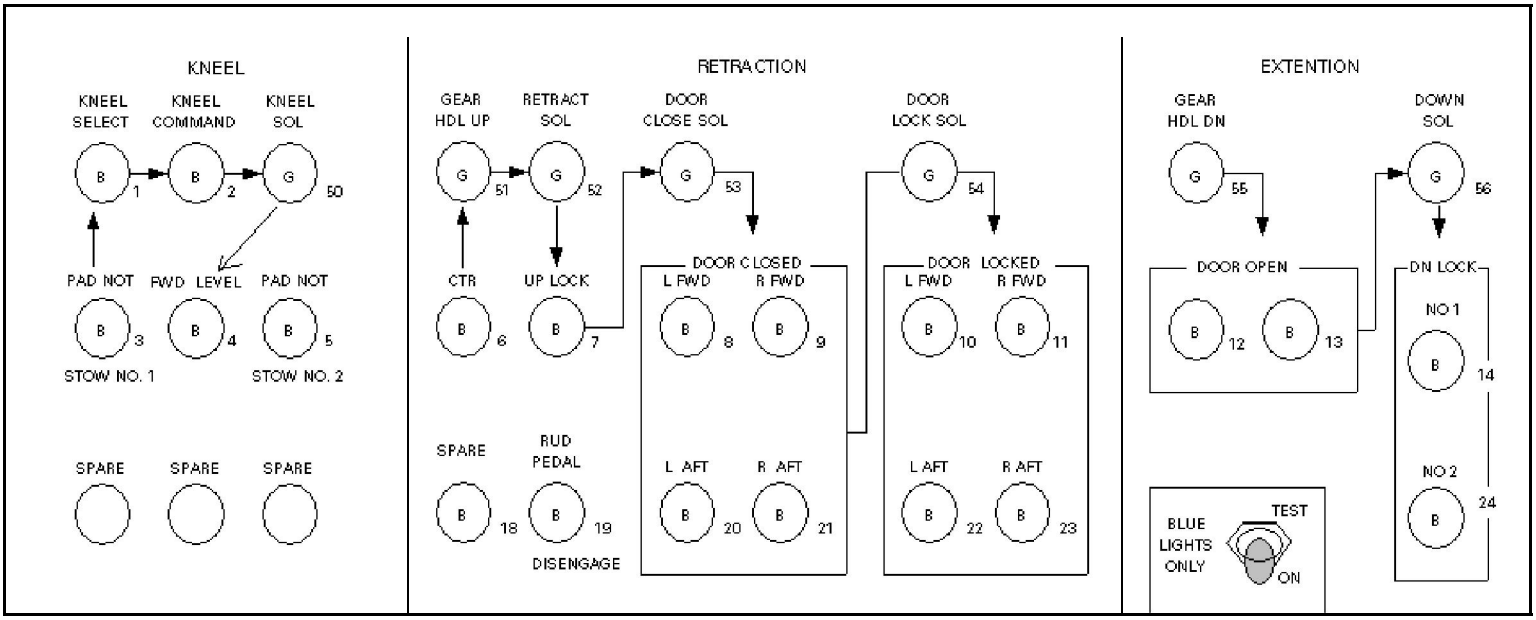

LH MLG SEQUENCE CONTROL PANEL *(Modified by TCTO 1C-5A-1984 and B)*

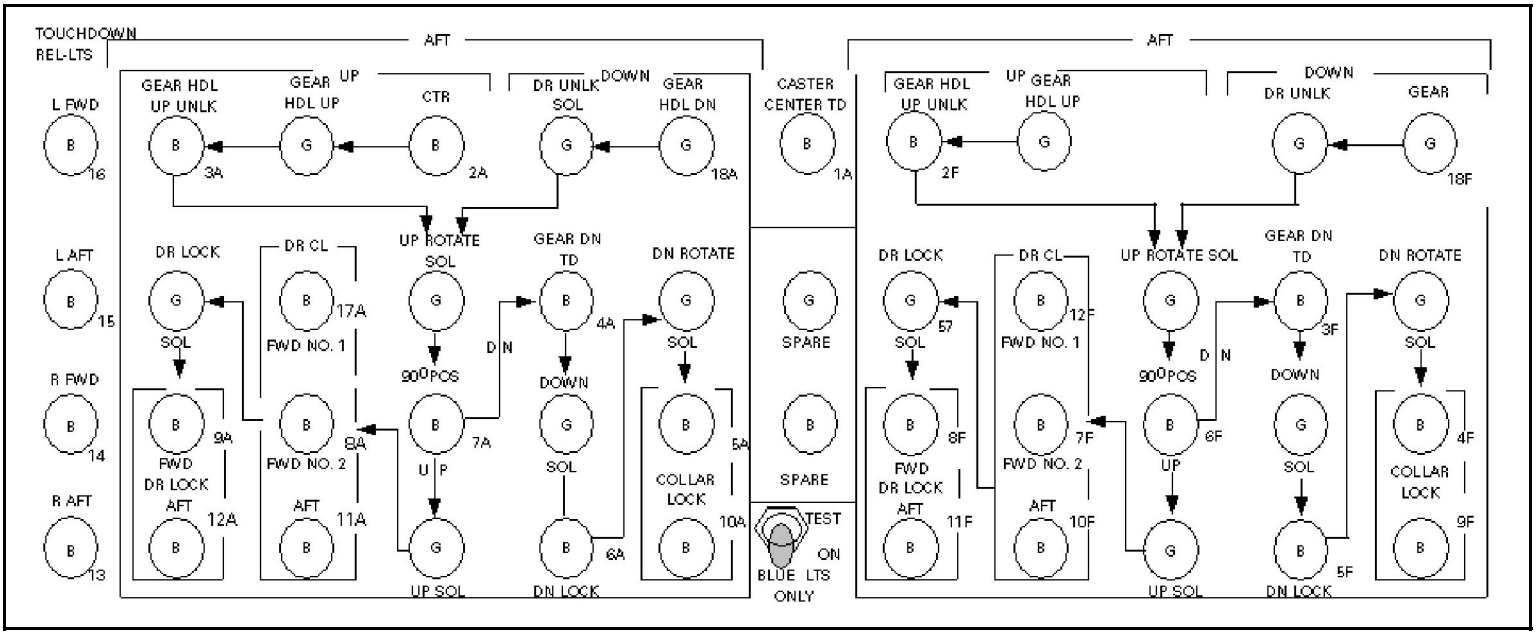
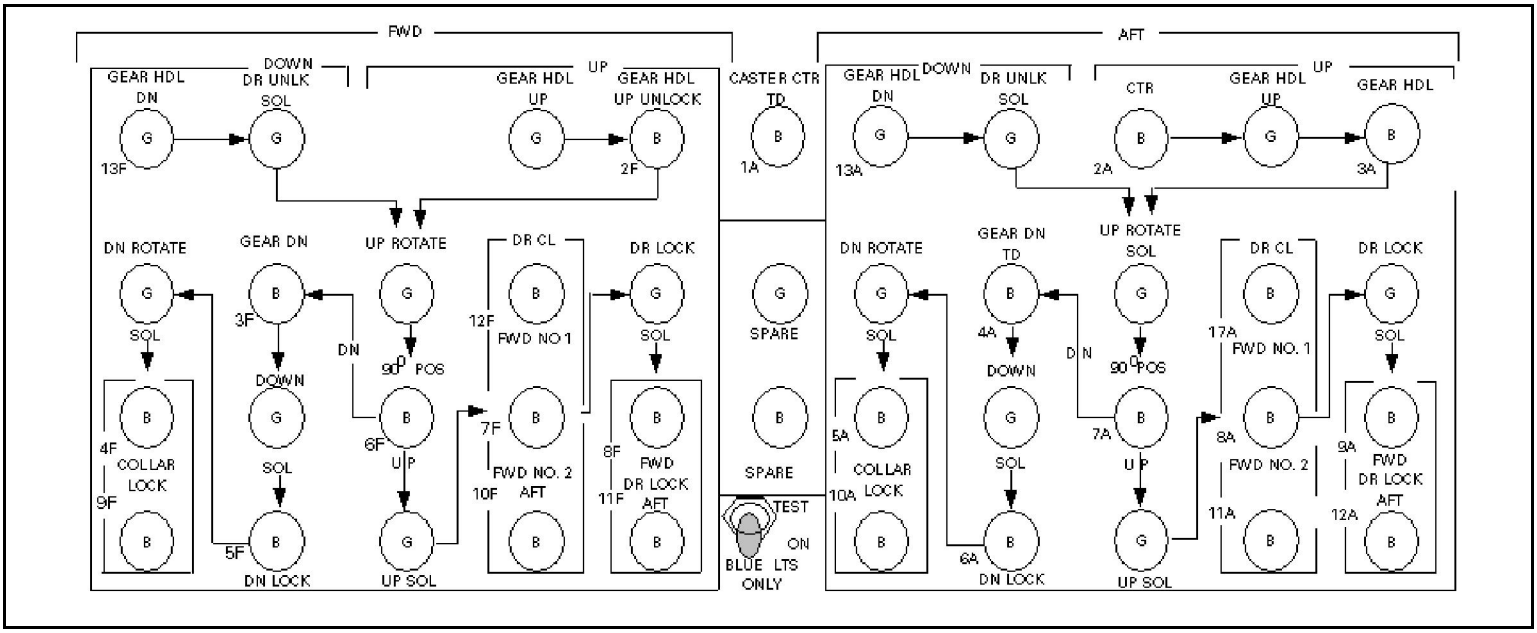
RH MLG SEQUENCE CONTROL PANEL *(Modified by TCTO 1C-5A-1984 and B)*