BY ORDER OF THE SECRETARY OF THE AIR FORCE

AIR FORCE INSTRUCTION 24-203

2 NOVEMBER 2010

Incorporating Through Change 3, 14 MAY 2012

LITTLEROCK AIR FORCE BASE Supplement

17 MAY 2012

Transportation

PREPARATION AND MOVEMENT OF AIR FORCE CARGO

COMPLIANCE WITH THIS PUBLICATION IS MANDATORY

ACCESSIBILITY: This AFI is available for downloading from the e-Publishing website at **http://www.e-publishing.af.mil/.**

RELEASABILITY: There are no releasability restrictions on this publication.

OPR: HQ USAF/A4LM — Certified by: HQ USAF/A4L (Robert H. McMahon, Maj Gen, USAF)

Supersedes: AFI24-203, 13 April 2007 — Pages: 210

(LITTLEROCKAFB)

OPR: 19 LRS/LGLOQ — Certified by: 19 MSG/CC (Colonel Tracey L. Watkins)

Supersedes: AFI24-203_LITTLEROCKAFBSUP, 24 December 2009 — Pages:5

This instruction implements AFPD 24-2, Preparation and Movement of Air Force Materiel, and supplements Defense Transportation Regulation (DTR) 4500.9-R, Parts I-VII. This directive applies to the Air Reserve Command and Air National Guard. It assigns responsibilities and provides guidance and procedures on the planning, documentation, funding and other actions associated with the movement of Air Force cargo in support of peacetime, exercise, humanitarian and contingency operations. It also prescribes uniform procedures that govern packaging requirements IAW Department of Defense (DOD) 4140.1-R, DOD Supply Chain Materiel Management Regulation, AFMAN 24-206_IP_IP, Packaging of Materiel and MIL-STD-2073-1, Standard Practice for Military Packaging during shipment, handling and storage of materiel. Foreign country laws and Defense Cooperation Agreements (DECA)/Status of Forces Agreements (SOFA) may limit or slightly modify the application of this instruction. The objectives of this instruction are to empower Logistics Readiness Squadron Commanders (LRS/CC)/Aerial Port Squadron Commanders (APS/CC) and Small Air Terminal Operations Manager with authority and responsibility to meet the cargo preparation and movement needs of

their customers, to identify references, and to provide necessary procedural guidance. This instruction applies to U.S. Air Force total force unit personnel who prepare, certify, handle, ship and store materiel. It promotes continuously improved standard practices, simplified operations, recycling procedures and environmental awareness. Attachment 1 lists references, acronyms, terms, and other supporting information used in this instruction. If a conflict exists between the DTR and information contained in this instruction, the DTR will take precedence. Refer recommended changes and questions about this publication to the Office of Primary Responsibility (OPR) using the AF IMT 847, Recommendation for Change of Publication; route AF IMT 847s from the field through the appropriate functional's chain of command. Field activities must send implementing publications to the higher headquarters functional OPR for review and coordination before publishing. No waivers may be granted for any part of the publication. Ensure that all records created as a result of processes prescribed in this publication are maintained in accordance with AFMAN 33-363, Management of Records, and disposed of in accordance with the Air Force Records Disposition Schedule (RDS) located at **https://www.my.af.mil/afrims/afrims/afrims/rims.cfm**/. The Paperwork Reduction Act of 1974 as amended in 1996 affects this instruction.

NOTE 1: Many of the publications and sources of information referenced throughout this instruction can be found on the worldwide web through the home pages of the responsible industry or government agency.

NOTE 2: The use of the name or mark of any specific manufacturer, commercial product, commodity, or service in this publication does not imply endorsement by the Air Force.

(LITTLEROCKAFB) This supplement implements and extends the guidance of AFI 24-203, *Preparation and Movement of Air Force Cargo*, 2 Nov 2010. AFI 24-203 must be read in conjunction with this supplement. This supplement applies to unit reusable container representatives and personnel directly associated with reusable containers from the 19th Airlift Wing and 314th Airlift Wing. This supplement establishes the policies and procedures for implementing and managing the Little Rock AFB Reusable Container Program and addresses the authority, disposition, and reporting procedures for an effective reusable container program.

Ensure that all records created as a result of processes prescribed in this publication are maintained In Accordance With (IAW) Air Force Manual (AFMAN) 33-363, *Management of Records*, and disposed of IAW with the Air Force Records Information Management System (AFRIMS) located at **https://www.my.af.mil/gcss-af61a/afrims/afrims**/. Refer recommended changes and questions about this publication to the Office of Primary Responsibility (OPR) using the AF Form 847, *Recommendation for Change of Publication*; route AF Form 847s from the field through the appropriate functional chain of command. This publication may be supplemented at any level, but all Supplements must be routed to the OPR of this publication for coordination prior to certification and approval.

SUMMARY OF CHANGES

This interim change provides guidance for incorporating appropriate materiel management receiving guidance into 24-series AFI in support of Integrated Receipt Process (IRP)

implementation. Receiving policy is incorporated into applicable functional areas. A margin bar indicates newly revised material.

(LITTLEROCKAFB) Changes to this supplement provide guidance for engine shipment, receipt, and visual processes for 19 LRS and the Little Rock AFB Engine Manager.

Chapter 1—RESPONSIBILITIES **12**

1.1. HQ USAF/A4LM, Integrated Life Cycle Management 12

1.2. Air Force Materiel Command (AFMC). 12

1.3. Major Commands (MAJCOMS). 13

1.4. Installation/Wing/AFGLSC Personnel. 14

1.4. (LITTLEROCKAFB) Installation/Wing/AFGLSC Personnel. 14

1.5. Logistics Readiness Squadron/Aerial Port Squadron Commander (LRS/CC or APS/CC): 15

1.6. The Installation Transportation Officer (TO)/Traffic Manager: 15

1.7. Squadron Commanders Other than LRS/CC or APS/CC. 18

1.8. Organizational Flight Personnel. 18

1.8. (LITTLEROCKAFB) Organizational Flight Personnel. 18

1.9. Managers and Supervisors. 18

1.10. Other Personnel Responsibilities. 19

Chapter 2—CARGO ROUTING AND MOVEMENT POLICY **20**

2.1. Introduction. 20

2.2. Establishing Priorities of AF Shipments. 20

2.3. Air Force Expedited Service. 20

Table 2.1. Delivery Standards. 21

2.4. Mode/Method Eligibility. 22

2.5. Carrier Selection. 23

2.6. Export/Import of Goods 25

2.7. Preventing DOD Shipments to Restricted Countries 26

2.8. Increased Liability Coverage and Excess Valuation. 26

2.9. Space Blocking. 27

2.10. Movement on Organic Airlift. 27

Chapter 3—SHIPPER, TRANSHIPPER, AND RECEIVER PROCEDURES **28**

3.1. Processing Material for Shipment. 28

	3.1.	(LITTLEROCKAFB) Processing Material for Shipment.	28
	3.2.	Assigning Transportation Priority.	29
Table	3.1.	MILSTRIP Shipments.	29
Table	3.2.	Non-MILSTRIP Shipments.	30
	3.3.	Shipment Planning.	31
	3.4.	Shipment Clearance Requirements.	34
	3.5.	Green Sheet Procedures.	36
	3.6.	Purple Sheet Procedures.	37
	3.6.	(LITTLEROCKAFB) Same Day Service (SDS) criteria.	37
	3.7.	Purchase of additional liability coverage or excess valuation.	38
	3.8.	Same Day Service (SDS) criteria.	38
Figure	3.1.	Certification of Same Day Service.	39
	3.9.	Express Carrier Shipment Documentation.	39
	3.10.	Releasing Freight	40
	3.11.	Receiving Freight.	40
Table	3.3.	Consignee Pickup Time Standards	40
	3.12.	Tracing Shipments and Reporting Discrepancies.	45
	3.13.	Other Shipment Requirements.	45
	3.13.	(LITTLEROCKAFB) Other Shipment Requirements.	45
	3.14.	Personal Property shipments in the DTS.	47
	3.15.	Cargo Inventories.	47
Chapter 4—HAZARDOUS MATERIALS (HM)			**48**
	4.1.	Hazardous Materials Definition.	48
	4.2.	General Requirements.	48
	4.3.	Hazardous Materials Procedures.	48
	4.4.	Management of Hazardous Material Data.	49
	4.5.	Hazardous Waste.	50
	4.6.	Radioactive Waste.	50
	4.7.	Radioactive Commodities.	51
	4.8.	Reshipment/Transshipment Procedures.	51
	4.9.	Secure Holding Areas (Formerly Safe Haven).	51
	4.10.	Personnel Qualifications.	51
	4.11.	DOT Special Permits (formerly Exemptions).	51

4.12. Competent Authority Approvals (CAA), Certifications of Equivalency (COE) and Hazard Classifications. 52

4.13. Documentation Retention. 52

4.14. Receiving Hazardous Material. 52

Chapter 5—CLASSIFIED, PROTECTED, SENSITIVE AND CONTROLLED CRYPTOGRAPHIC CARGO,ARMS, AMMUNITION, AND EXPLOSIVES (AA&E), CLASSIFIED AND UNCLASSIFIED NUCLEAR WEAPONS RELATED MATERIEL (NWRM) 53

5.1. Need for Special Procedures. 53

5.2. Description of Classified Material on a BOL. 55

5.3. Controlled Inventory Item Codes (CIIC)/Physical Security Codes (PSC). 55

5.4. Classified and Protected Cargo Movement Codes (Transportation Level of Protection). 56

5.5. Movement and Handling Requirements. 56

5.6. Packaging Classified/NWRM Material: 57

5.7. Special Instructions for Small Arms and Other Weapons. 58

5.8. Explosives. 59

5.9. Escort Criteria of AA&E for Carrier Load/Off-Load and Base Surface Movements. 59

5.10. Advance Shipment Planning. 59

5.11. Report of Shipment (REPSHIP) Process. 60

5.12. Pilferable Cargo Protection. 61

5.13. Movement of Classified, Protected and all NWRM Shipments via Blanket Purchase Agreement (BPA) DOD Domestic Express Small Package Service (DESPS) Carriers. 62

5.14. Secure Holding Areas (Formerly Safe Haven, Refuge and Secure Holding Areas). 63

5.15. Defense Transportation Tracking System (DTTS). 63

5.16. Emergency Hot Lines. 64

Chapter 6—BILLS OF LADING 65

6.1. Commercial Bill of Lading (CBL). 65

6.2. SF Form 1103, GBL, and SF Form 1109, GBL Continuation Sheet. 65

6.3. Consignee Copies. 66

6.4. SF 1103 GBL Control Procedures. 66

Chapter 7—AF TRANSPORTATION FUNDING 68

7.1. Transportation Funding Policy. 68
7.2. Transportation Funding Procedures. 68
7.3. Funding Categories. 70
Table 7.1. SMAG Divisions. 70
7.4. FMS shipments. 73

Chapter 8—PACKAGING AND HANDLING 74

8.1. Uniform Procedures. 74
8.2. Packaging Operations. 74
8.3. Facilities. 74
8.4. Authorization of Equipment. 74
8.5. Packaging Line Layout. 74
8.6. OSHA and AFOSH Standards. 75
8.7. Packaging Cost Control. 75
8.8. Preserving and Packing Items of Supply and Equipment. 75
8.9. Packing. 77
8.10. How to Pack Items. 78
Figure 8.1. DOD Pest Free Mark. 81
Figure 8.2. ISPM 15 Certification Mark 82
Figure 8.3. This End Up - Orientation Arrows. 91
Figure 8.4. Uniform Load. 92
Figure 8.5. Topheavy Load. 92
8.11. Using Preservative Treated Wood. 94

Chapter 9—AIR FORCE REUSABLE CONTAINER PROGRAM 96

9.1. General Information. 96
9.2. Serviceable Reusable Containers. 96
9.3. Categories of Reusable Containers. 97
9.4. Types of SPI Containers. 98
9.5. Packaging Engineering and Repair Capabilities. 100
9.6. Controlling Reusable Containers. 100
9.7. Excess Reusable Containers for Redistribution. 105
9.8. Selecting and Designing Specialized Long life Containers. 107
9.9. Container Standardization. 107
9.10. Reusable Container Program Implementation Guidance. 107

9.10. (LITTLEROCKAFB) Reusable Container Program Implementation Guidance. .. 107

Chapter 10—DISCREPANCY REPORTS AND TRACING PROCEDURES 114

10.1. Inspection. 114

10.2. Responsibilities of the Shipping Activity. 114

10.3. Damage Control in Receiving Activities. 114

10.4. Procedures for Stored Items. 114

10.5. Damage to Issues. 114

10.6. Discrepancy Reporting. 114

10.7. FMS Discrepant Materiel. 116

10.8. Suggestions for Improved Packaging. 116

10.9. Tracer Action. 116

10.10. AF GOCARE Program. 117

Figure 10.1. COMMITTEE MEMBER GOCARE QUARTERLY REPORT. 118

10.11. Tracing Process. 118

10.12. Transportation Tracer Listing (TTL). 119

10.13. Delinquent Shipment Listing or R40 Procedures. 119

10.13. (LITTLEROCKAFB) Delinquent Shipment Listing or R40 Procedures. 120

10.14. Additional procedures for CMOS operating locations. 120

10.15. Tracing OCONUS DTS Shipments. 121

Chapter 11—CLEARANCE OF AIR FORCE CARGO AND SHIPPER SERVICES 122

11.1. CONUS Distribution Management Cell (CDMC). 122

11.2. Theater Consolidation Shipping Point – Europe (TCSP-E). 122

11.3. Air Force Eligibility and Challenge Procedures. 122

Table 11.1. TP - RDD Relationship 123

Chapter 12—TRANSPORTATION PAYMENT PROCESS 126

12.1. 126

12.2. TPPS Payment Process. 126

12.3. Local Certification Process (LCP). 131

12.4. Third Party Billing (TPB). 131

12.5. The GPC may be used to pay for DESPS BPA. 132

Chapter 13—CONTRACTOR SUPPORT 133

13.1. Transportation and Traffic Management Guidance. 133

13.2. Deployment and Distribution Support. 133
13.3. Assistance to Contracting. 133
13.4. Assistance to Contracting and GPC holders. 134
13.5. NWRM Movement Reporting Requirement for Performance Work Statement (PWS). 136

Chapter 14—MANAGEMENT OF MODULAR, INTERMODAL CONTAINERS AND 463L ASSETS 138

14.1. ISO Shipping Container Management Responsibilities. 138
14.2. ISO Shipping Container Management 138
14.3. Non-USAF owned/common-use containers and MILVANs. 139
14.4. Munitions Containers. 139
14.5. Outbound Container Shipments. 139
14.6. Inbound Container Shipments. 139
14.7. Defective Containers. 140
14.8. ISU 60//90 Management. 140
14.9. 463L Asset Management. 140
14.10. RFID Procedures. 141

Chapter 15—AIR FORCE PACKAGING TECHNOLOGY & ENGINEERING FACILITY (AFPTEF) CHARTER 142

15.1. AFPTEF Mission. 142
15.2. Responsibilities of HQ USAF. 142
15.3. Responsibilities of Major Commands. 142
15.4. Responsibilities of Air Force Global Logistics Support Center (AFGLSC). 143
15.5. Responsibilities of AFPTEF. 143
15.6. Procedures for Requesting AFPTEF Mission Support. 144

Chapter 16—TRAINING 145

16.1. Training Requirements. 145
16.2. Defense Ammunition Center (DAC) Military Packaging Training. 145
16.3. Local Training. 145
16.4. TPPS Training. 145
16.5. Shipment Funding Training. 145
16.6. CMOS Training. 146
16.7 Lackland AFB Transportation Course Listing. 146

16.8. Convention for Safe Container (CSC) inspection course. 146
16.9. Additional Training Links and Opportunities. 146

Chapter 17—SAFETY 147

17.1. Operational Risk Management (ORM). 147
17.2. Hazards. 147
17.3. Hazard Abatement Program. 147
17.4. Air Force Mishap Prevention Program. 147
17.5. Safety Inspections. 148
17.6. General Safety Guidance. 148
17.7. Work Safety Guidance. 149
17.8. Flight Line Driving. 149
17.9. Warehouse Entry/Exit. 149
17.10. AFOSH Guidance. 149
17.11. Hazardous Energy Control (Lockout and Tagout). 149
17.12. Safety Equipment. 149

Chapter 18—IN TRANSIT VISIBILTY (ITV) REQUIREMENTS 151

18.1. Introduction. 151
18.2. ITV Process. 151
18.3. Bar Coding Requirements. 151
18.4. Active RFID Requirements. 151
18.5. I TV Verification. 153
18.6. Direct Vendor Delivery (DVD) Contract Language. 153
18.7. ITV Metrics. 153
18.8. Contingency/Unit Move Deployment and Redeployment. 154
Figure 18.1. Deployment In Transit Visibility. 154
18.9. PEACETIME AIRLIFT OPERATIONS (NON-DEPLOYMENT) 157
18.10. Global Decision Support System (GDSS) - ITV Feeder System. 158
18.11. Commercial Web-Based Tracking Capabilities. 158

Chapter 19—TRANSPORTATION AND PACKAGING DATA SYSTEMS AND WEB TOOLS 160

19.1. Overview. 160
19.2. Automated Air Load Planning System (AALPS) 160
19.3. Automated Special Approval Process (ASAP) System 160

19.4. Cargo Movement Operations System (CMOS). 160
19.5. DOD Activity Address Code (DODAAC) Web Management System 160
19.6. Global Air Transportation Execution System (GATES) 160
19.7. Global Freight Management System - Electronic Transportation Acquisition (GFM-ETA) 161
19.8. Global Transportation Network (GTN) 161
19.9. Hazardous Materials Information Resource System (HMIRS) 161
19.10. Intelligent Road/Rail Information Server (IRRIS) 161
19.11. In transit Critical Asset Tracking System (ICATS). 161
19.12. LOGMOD - Logistics Module. 162
19.13. MANPER-B 162
19.14. Operation Enduring/Iraqi Freedom (OEF/OIF) Tool 162
19.15. PackWeb 162
19.16. Reusable Container Worldwide Warehouse System (RECON) 162
19.17. Special Packaging Instructions Retrieval and Exchange System (SPIRES) 162
19.18. TRACKER Data System 162
19.19. Tracker-Lite System 163
19.20. Logistics Web Forms Processor (LWFP). 163

Chapter 20—COUNTER-CHEMICAL, BIOLOGICAL, RADIOLOGICAL, AND NUCLEAR HIGH YIELD EXPLOSIVES (CBRNE) REQUIREMENTS, TACTICS, TECHNIQUES, AND PROCEDURES FOR IDENTIFYING, MARKING, AND MANAGING CONTAMINATED CARGO SHIPMENTS 164

20.1. General Information. 164
20.2. Cargo Movement Responsibilities: 164
Table 20.1. Cargo Movement Mission Criticality Level. 165
Table 20.2. Cargo Movement Hazard Category. 165
Table 20.3. Cargo Decontamination Actions (Critical). 167
Table 20.4. Cargo Decontamination Actions (Priority). 168
Table 20.5. Cargo Decontamination Actions (Accelerated). 168
Table 20.6. Cargo Decontamination Actions (Routine). 169
Table 20.7. Cargo Decontamination Actions (Negligible). 169

Chapter 21—OTHER CARGO MOVEMENT INFORMATION AND ADMINISTRATIVE REQUIREMENTS 173

21.1. Forecasting Cargo Requirements. 173
21.2. SAAM Requests. 173
21.3. Shipment of Human Remains. 173
21.4. DELETED 173
21.5. Public Highway Movements. 173
21.6. Other Administrative Requirements. 174

Attachment 1—GLOSSARY OF REFERENCES AND SUPPORTING INFORMATION 176

Attachment 1—(LITTLEROCKAFB) GLOSSARY OF REFERENCES AND SUPPORTING INFORMATION 200

Attachment 2—PREPARATION OF DD FORM 1149, REQUISITION AND INVOICE/SHIPPING DOCUMENT 201

Attachment 3—AIR FORCE PACKING LEVELS OF PROTECTION 203

Attachment 4—WOOD PACKAGING MATERIAL (WPM) AUDIT INSPECTION CHECKLIST PHYTOSANITARY REQUIREMENTS FOR WPM COMPLIANCE 204

Attachment 5—PROCEDURES FOR COMPLETING AF FORM 451, REQUEST FOR PACKAGING SERVICE 205

Attachment 6—OUTBOUND TRANSPORTATION PROTECTIVE SERVICE MATERIEL CHECKLIST 208

Attachment 7—INBOUND TRANSPORTATION PROTECTIVE SERVICE MATERIEL CHECKLIST 209

Attachment 8—SAMPLE TO APPOINTMENT SPECIAL ORDERS 210

Chapter 1

RESPONSIBILITIES

1.1. HQ USAF/A4LM, Integrated Life Cycle Management Policy Division

1.1.1. Is the sole authority to establish and modify Air Force transportation, packaging, and receiving policy, providing oversight and assistance where required.

1.1.2. Is the overall authority for Air Force transportation, packaging and receiving processes.

1.2. Air Force Materiel Command (AFMC).

1.2.1. Air Force Materiel Command Air Force Global Logistics Support Center (AFMC AFGLSC), operating under HQ USAF Program Action Directive (PAD) 06-09 , develops, maintains and coordinates the implementation of Air Force transportation and packaging policy, procedures and processes.

1.2.1.1. 401 SCMS/GUMA, - Distribution Flight, provides Air Force transportation and packaging policy and guidance for sustainment logistics support of weapon systems, equipment, hazardous materials and munitions. Additionally, develops proposals and recommends policy to the Air Staff in all areas of cargo movement, packaging and cargo funding. Serves as AF OPR for MIL-STD-129, MIL-STD-2073-1,Third Party Provider Systems (TPPS) and as AF TPPS program manager and systems administrator. Serves as Air Force focal point for hazardous materials packaging waivers and DOT Special Permits and Air Force Wood Packaging Material (WPM) Component Manager. Programs and manages the Air Force Special Packaging Instructions Retrieval & Exchange System (SPIRES) and Air Force DOD Address Activity Codes (DODAAC). Responsible for the Air Force Intermodal Container Management Program and designated as the Air Force Representative to USTRANSCOM's Joint Intermodal Working Group (JIWG) and Joint Standardization Board for Intermodal Equipment (JSBIE). As the Air Force executive agent for air transportability, provides transportation and packaging policy on logistics acquisition and sustainment support for the Air Force in areas of weapon systems research, development, test and evaluation (RDT&E).

1.2.1.2. 403 SCMS/GUEB, Air Force Packaging Technology and Engineering Facility (AFPTEF), establishes programs for packaging engineering, design, build and test capabilities, IAW AFMAN 24-206(I), *Packaging of Materiel*, for Air Force activities and Federal agencies on a cost-reimbursable basis.

1.2.1.3. 635 SCMW/WPOL/ACO, as the Air Force military Air Clearance Authority (ACA), controls entry of Air Force-sponsored cargo into CONUS AMC aerial ports.

1.2.1.4. 402 SCMS/GUSB develops and implements metric processes and procedures to measure compliance with Air Force policy for the movement of materiel and packaging effectiveness. Provides MAJCOMS with metric pipeline performance measurement data for their review and analysis.

1.2.1.5. 591 SCMG/GUF manages execution of the AF Second Destination Transportation (SDT) Centrally Managed Allotment (CMA), to include forecasting and budget execution, as well as manage the SDT portion of the AF Working Capital Fund (WCF).

1.2.2. ASC/ENFC, Air Transportability Test Loading Agency (ATTLA), as the DOD agency responsible for the approval of Air Force airlift cargo, provides certification of cargo exceeding set requirements or any item which requires special equipment or procedures for loading for air transportability and air drop. Provides assistance to all branches of the federal government and works directly with procurement offices and DOD contractors to ensure the design of new pieces of equipment allows for air transportability. Publishes MIL-HDBK-1791, *Designing for Internal Aerial Delivery in Fixed Wing Aircraft*. DOD Instruction (DODI) 4540.7, *Operation of the DOD Engineering for Transportability and Deployability Program*, outlines general procedures governing transportability and the aircraft specific cargo loading manual (-9 Technical Order (T.O.)) to identify aircraft specific potential air transport problems. Additional guidance can be found on the ATTLA Community of Practice (CoP) at: **https://afkm.wpafb.af.mil/ASPs/CoP/OpenCoP.asp?Filter=OO-EN-KA-01**.

1.3. Major Commands (MAJCOMS).

1.3.1. Direct subordinate activities in packaging and traffic management, develop instructions based on policy directives, AFIs, public law, international agreements, mission requirements and provide guidance as necessary.

1.3.2. Ensure personnel assigned under the Transportation Officer have sufficient training, resources and guidance available to meet mission requirements.

1.3.3. Perform staff assistance visits and review staff assistance reports for trends and/or problems requiring attention, as required.

1.3.4. Analyze metric performance measurement data and provide this information to appropriate MAJCOM staff functional managers and Deployment and Distribution Flights for their review and action, as appropriate. Refer to the AF Knowledge Now Cargo Movement Community of Practice (CoP) web page for latest guidance on specific metric data, how collected, and how reported: **https://afkm.wpafb.af.mil/community/views/home.aspx?Filter=OO-LG-TR-A1**.

1.3.5. Ensure Container Control Officers (CCO) are appointed in writing, if applicable, IAW the DTR Part VI and JP 4-09, Distribution Operations. The CCO ensures command accountability, inventory and proper control of mobility bins, modular and intermodal container assets and provides assistance to subordinate units on transportation/shipping container related matters (purchasing, leasing, repair, etc.).

1.3.6. Appoint in writing a primary and alternate WPM Point of Contact to ensure command compliance and monitoring of WPM standards and measures. Reviews, approves and rejects WPM audits. Provides assistance, as required, to base-level units in WPM administration, remediation and enforcement.

1.3.7. Provide assistance, as required, to base-level units in establishing an effective Reusable Container Program (RCP).

1.3.8. Perform Unit Compliance inspections.

1.3.9. AEF UTC Commitments.

1.4. Installation/Wing/AFGLSC Personnel.

1.4. (LITTLEROCKAFB)Installation/Wing/AFGLSC Personnel.

1.4.1. The Area, Activity, or Installation Commander (or their delegated representative[s]) will appoint a military member or civilian employee (not a contractor) as Transportation Officer (TO) to execute DOD deployment and distribution policies and procedures to obtain transportation services. A fully qualified TO is appointed as the single fiduciary and statutorily responsible transportation intermodal decision authority IAW, DTR, Volumes I-VIII. The appointed TO will be a fully trained and equipped member/employee of the activity or installation CDR‘s technical staff. The appointment will be accomplished by special order of the area, activity, or installation CDR IAW regulations of the military departments concerned and will contain at a minimum the contents in the sample order provided in Attachment 6. Refer to DTR, Part II, Paragraph 201.

1.4.1. **(LITTLEROCKAFB)** The 19 AW Commander shall appoint in writing a senior logistics officer to manage the installation Reusable Container Program (RCP), and be designated as the Base Container Manager (BCM).

1.4.1.1. The TO acts as the single movement manager for DOD passengers, DOD cargo, and DOD personal property for DOD personnel for the installation including all tenant and geographically separated units, empowered with authority to complete assigned missions.

1.4.1.2. TOs must have a comprehensive knowledge (minimum 9-skill level or civilian equivalent that meets the position requirements of the unit manning document), skills, and ability to manage and execute a wide range of deployment and distribution principles, policies, practices, laws, regulations, techniques, and operations, to include those concerning economics of transportation; DOD transportation systems, commercial carrier operations and tariffs; NWRM, AA & E, hazardous, classified, extraordinary, and sensitive materials; and related areas such as storage, preservation, packaging, and US and foreign customs import/export requirements as these involve air, motor, rail, and water movements. Additionally, air terminal operations for passenger and cargo transportation including but not limited to handling of such items as privately owned firearms/vehicles, human remains, perishables, outsized, and overweight items. TOs also require an extensive knowledge of entitlements for passenger travel and shipment/storage of personal property for military members, civilian employees, and their dependents IAW public law and federal regulations.

1.4.2. Installation/Wing/AFGLSC 448 Supply Chain Management Wing (SCMW) Commander shall ensure installation units are compliant with published details in Chapter 9 of this AFI and appoint in writing a senior logistics officer to manage the installation Reusable Container Program (RCP). Normally the installation TO or ALC AFGLSC Packaging Manager is the Base Container Manager (BCM).

1.4.3. Installation/Wing/AFGLSC RCP Manager. The installation/wing/AFGLSC RCP manager, hereto referred as the BCM or their designated representative shall execute an

effective installation RCP. Additional guidance on BCM responsibilities is found in Chapter 9.

1.4.4. Installation Radiation Safety Officers (RSOs) have overall administrative responsibility for ensuring the proper receipt, use, storage, and disposal of all radioactive materials in accordance with provisions of AFI 40-201, *Managing Radioactive Materials in the U.S. Air Force.*

1.4.5. The Installation/Wing Commander shall publish detailed procedures and training for all base customers and security personnel covering the preparation, handling, receipt, documentation, shipment and delivery of classified, sensitive, AA&E shipments, and NWRM. Contractor operated bases will follow their Statement of Work (SOW) to support these shipments.

1.5. Logistics Readiness Squadron/Aerial Port Squadron Commander (LRS/CC or APS/CC):

1.5.1. Organize, program, and manage transportation resources to include host, tenant, and geographically separated unit support agreements for transportation services.

1.5.2. Ensure the TO is appointed as required to administer Transportation-related Federal Acquisition Regulation (FAR)-based contracts.

1.5.3. Certify and appoint in writing military or civilian personnel to serve as primary and alternate WPM Site Custodian(s) and personnel to serve as primary and alternate WPM Site Auditor(s). Personnel selected as WPM Site Auditor(s) must not be assigned to the Deployment and Distribution Flight.

1.5.4. Appoint in writing LRS/APS personnel authorized to process, ship and receive AA&E, classified, sensitive and NWRM material. Ensure these personnel are properly trained and certified in accordance with applicable directives and Career Field Education Training Plan (CFETP).

1.5.5. . Provide support to ensure active radio frequency identification (aRFID) tagging of unit move cargo.

1.5.6. Establish a written local process to document transfer of accountability between the Receiving Element and LRS Inspections Section.

1.6. The Installation Transportation Officer (TO)/Traffic Manager:

1.6.1. For the purposes of this publication, the individual performing as the Installation Transportation Officer is hereto referred as the TO. The TO is the installation's single-manager for the Distribution segment of the Supply Chain and must be fully qualified to manage all deployment and distribution functions incident to movement and receipt of DOD passengers, DOD cargo, and personal property for DOD personnel. The TO shall apply sound and prudent traffic management principles when making modal and intermodal decisions. This excludes shipments moved directly by individual units, such as Government Purchase Card shipments, returns to vendors, and direct delivery to DLA Disposition Services from Materiel Management or from the Performing Activity (PA). For these types of shipments, the TO will be available to provide assistance to the shipper or PA upon request. The TO may not negotiate rates or other agreements that are the responsibility of USTRANSCOM or its Transportation Component Commands (TCC) – Air Mobility

Command (AMC), Military Sealift Command (MSC), or Surface Deployment and Distribution Command (SDDC). See DTR 4500.9-R, *Part II, Cargo Movement*; *Part III, Mobility*; P*art V, Customs; and Part VI, Management and Control of Intermodal Containers and System 463-L Equipment.* The TO will maintain accountability of [materiel] receiving activities that take place outside of the Receiving Element of the Deployment and Distribution Flight in Logistics Readiness Squadrons. Performance of receipt process duties outside of the Receiving Element will only take place to maximize efficiencies and only if approved in writing by the Installation Transportation Officer unless otherwise exempted in this AFI. The TO will:

1.6.2. Organize, program and manage transportation and packaging resources to include host, tenant and geographically separated unit support agreements for transportation, packaging and funding support. TOs will establish procedures for shipping/receiving expedited 999/NMCS/MICAP, or critical/classified items during non-duty hours. **Note**: Capability to ship/receive cargo depends on geographic location as well as carrier capabilities and availabilities.

1.6.3. Provide annual forecast and budget for sufficient local O&M transportation funds. (See Chapter 6).

1.6.4. Act as a Contracting Officer Representative (COR) , alternate COR, or ordering officer for transportation-related FAR-based contracts.

1.6.5. When appointed by the Installation/Wing Commander as the BCM, the TO will execute all responsibilities of the RCP.

1.6.6. Appoint transportation agents as necessary by letter. Letters of appointment must be retained in the Deployment and Distribution Flight office. Refer to DTR, Part II, Chapter 201, paragraph C.13. for exceptions. For appointment of transportation agents at ANG bases, see NGR 130-6/ANGI 36-2, *United States Property and Fiscal Officer Appointment, Duties, and Responsibilities*.

1.6.7. Ensure that all activities that receive, store, issue or ship government materiel properly preserve and pack all items (regardless of condition), to the extent of base-level operational capabilities, in such a manner to prevent deterioration and damage.

1.6.8. Establishment of any new small package carrier accounts must be approved in writing by the TO for the purpose of transporting official freight shipments. When approved, the TO will train these units/activities on all responsibilities for tracing, transportation discrepancy reporting, certification of hazardous declarations, customs requirements, and fiscal responsibility for maintaining obligation authority. For overseas locations, TOs are the only authorized small package carrier account on the installation.

1.6.9. Ensure the fund citation provided by the shipper on a *Miscellaneous Obligation/Reimbursement Document (MORD)* is correctly entered in the shipper system and TPPS and is correctly applied to the movement documentation. Only “S” MORDs can be used in TPPS.

1.6.10. Ensure approved carrier tenders, contracts, and service guides are available.

1.6.11. Appoint Cargo Movement Operations System (CMOS) administrators at CMOS operating locations and ensure they receive required training.

1.6.12. Maintain or have electronic access to current editions of all applicable publications to include those for handling hazardous materials.

1.6.13. Use mandatory GSA/AMC approved contract carrier service and USTRANSCOM, TCCs – AMC/MSC/SDDC - organic, procured or approved transportation services. Exceptions to this policy will be IAW DTR, Part II.

1.6.14. Require prompt reporting of packaging deficiencies IAW AFJMAN 23-215, *Reporting of Supply Discrepancies*. Investigate reported packaging deficiencies to determine the cause. Correct procedures to prevent recurrence. Additional guidance on packaging discrepancies is found in Chapter 8.

1.6.15. Properly package, mark and label radioactive waste according to T.O. 00-110N-2.

1.6.16. Comply with applicable HAZMAT shipping instructions (i.e., 49CFR, IATA, ICAO, IMDG, AFMAN 24-204_IP, *Preparing Hazardous Materials for Military Air Shipment*, etc.) for all modes of transport.

1.6.17. Ensure proper training is provided to subordinates to safely handle, package, load, transport, unload, receive, store and transport hazardous materials, classified, sensitive and classified/unclassified materials to include NWRM.

1.6.18. Provide advice to Air Force contracting offices on transportation language for the efficient and economical movement of materiel from contractor and vendor sources of supply to the contracted destination.

1.6.19. Appoint TPPS certifying official in writing and ensure they complete required training. For ANG units, the United States Property and Fiscal Officer (USPFO) will appoint TPPS certifying official and ensure they complete required training. Additional guidance on training is found in Chapter 16.

1.6.20. Provide support and input to the local Government Purchase Card (GPC) training and assist GPC holders, where required, on packaging inquiries to overseas forward operating locations (See Chapter 13).

1.6.21. Ensure packaging personnel access the Special Packaging Instructions Retrieval & Exchange System (SPIRES) to verify the item's current SPI revision and pack the item as required.

1.6.22. Exercise overall management and maintenance responsibility for intermodal and modular containers used by Air Force units on the installation. See Chapter 14.

1.6.23. Exercise management responsibility for 463L assets on the installation when the installation has an Air Force small terminal operation under the TO. See Paragraph 14.9. and AFI 24-114.

1.6.24. Analyze metric performance measurement data received from their MAJCOM and take corrective action, as appropriate.

1.6.25. Ensure Transportation Facilities Guide (TFG) information for their installation is kept up to date in accordance with DTR Part II, Paragraph 201-P.

1.6.26. May require more stringent shipping controls and increased TPS when circumstances or conditions warrant.

1.6.27. Appoint Reject and Delinquent Document monitors to the Receiving Element in writing to ensure both lists are monitored/worked daily. Individuals must hold a minimum 5-skill level.

1.6.28. Nominate individuals to the LRS Chief Inspector for training and qualification as limited inspectors within the Receiving Element. Upon qualification, the TO will appoint Limited Inspector(s) in writing and identify tasks performed.

1.7. Squadron Commanders Other than LRS/CC or APS/CC.

1.7.1. Commanders shall ensure serviceable and reparable items are packaged in their prescribed reusable containers (e.g. Special Packaging Instructions (SPI) and Fast Packs) for transport during peacetime and wartime contingency, deployment and mobility operations.

1.7.2. Commanders shall ensure aircraft/vehicle fuel devices, offered for transport (air and surface), are properly drained, purged, certified and handled by qualified personnel knowledgeable IAW hazardous materials technical and safety data.

1.7.3. Commanders shall appoint in writing personnel authorized to process, ship and receive AA&E, classified, sensitive and classified and unclassified NWRM. Commanders shall ensure all personnel, who handle, process, receipt and ship AA&E classified, sensitive, classified and unclassified NWRM are properly trained and certified in accordance with applicable directives.

1.8. Organizational Flight Personnel.

1.8. (LITTLEROCKAFB) Organizational Flight Personnel.

1.8.1. Commanders, other than LRS/CC or APS/CC will appoint responsible individuals (primary and alternate) by memorandum to act as Unit Container Managers (UCMs) and manage the RCP within their organizations. UCMs must be in the rank of SSgt or above, or civilian equivalent. Forward a copy of the memorandum of appointment to the TO. This memorandum of appointment must contain the names and duty phone numbers of the UCMs and will be updated annually, or as required, due to changes in personnel. Memorandums of appointment should also contain signatures of UCMs for verification against AF Form 451, *Request for Packaging Service*. Organizational flights/units requiring packaging services must complete an AF Form 451. The UCMs are the only individuals authorized to sign AF Form 451. Additional guidance on UCM responsibilities is found in Chapter 9.

1.8.1. **(LITTLEROCKAFB)** Organizational Commanders will appoint responsible individuals (primary and alternate) by memorandum to act as Unit Container Managers (UCMs) and manage the RCP within their organizations. UCMs should be in the rank of SSgt or above, or civilian equivalent. It is the unit's responsibility to properly maintain and utilize reusable containers to the fullest extent possible. Destruction of reusable containers is not authorized unless the unit reusable container representative determines the protective properties of the container are beyond repair.

1.8.2. Commanders shall emphasize recovery and re-use due to high maintenance cost and depleted inventory level requirements of reusable containers and packing material.

1.9. Managers and Supervisors. Comply with guidelines set forth in the Air Force Reusable Container Program, Occupational Safety and Health Association (OSHA) and Operational Risk Management (ORM) guidelines outlined herein.

1.10. Other Personnel Responsibilities. Personnel assigned under the TO, transportation agents and others appointed by the TO who are engaged in the shipment or receipt of materiel, must comply with appropriate law, DOD and Air Force policy, official agreements and established procedures.

1.10.1. CMOS System Administrators will assign USERIDs and set user privileges.

1.10.2. Distribution Flight Limited Inspectors will verify information needed for in-checking and will perform limited inspection functions as designated by the LRS Chief Inspector and agreed to by the TO.

Chapter 2

CARGO ROUTING AND MOVEMENT POLICY

2.1. Introduction. Air Force TOs and Deployment and Distribution Flights will use DTR 4500.9-R, Parts II, III, V and VI as their primary guide to direct their organization's shipping activities. This document is a supplement to the DTR and provides the TO and other AF transportation shipping activities amplification, interpretation and exceptions to DOD shipping rules. There are many AF programs, tests and other efforts to enhance the movement of material throughout the AF Supply Chain and this document is set up to explain these AF unique transportation solutions without duplicating instructions found in the DTR.

2.1.1. CMOS use is mandatory for all Air Force deployment and distribution cargo movement functions and is the CSAF IDS directed system used for wing-level deployment, contingency passenger and cargo processing. GATES can be used in place of CMOS for deployment air manifesting at AMC strategic ports/onload locations (see paragraph 18.9.1.1.).

2.1.2. Deployable CMOS (DCMOS) use is mandatory for deployed cargo movement activities.

2.2. Establishing Priorities of AF Shipments. Transportation Priority (TP) and applicable Time Definite Delivery (TDD) Standards are found in DOD 4140.1-R (*DOD Supply Chain Materiel Management Regulation*), Appendix 8. TOs and other AF shippers will follow the instructions identified in DTR, Part II, Paragraph 203-B.3. for establishing movement priorities for AF Shipments. **http://www.transcom.mil/j5/pt/dtrpart2/dtr_part_ii_203.pdf** (see note 3, Table 2.1).

2.2.1. Air Force shipment planners assign the transportation priority based on the supply priority designator and/or RDD printed on DD Form 1348-1A, *Issue Release/Receipt Document*, DD Form 1149, *Requisition and Invoice/Shipping Document*, or Memorandum for non-MILSTRIP shipments. See Table 3.1. for converting the supply priority designator for MILSTRIP shipments, or Table 3.2. for converting customer RDD for non-MILSTRIP shipments, to the appropriate transportation priority (TP).

2.3. Air Force Expedited Service. The AF has determined that certain material (identified by Project Code and/or other data on the issue document—DD Form 1348-1A, DD Form 1149 etc.) must be moved in accordance with Table 2.1. time standards. The following shipment categories will be afforded expedited service (sustainment or retrograde):

2.3.1. TP-1 with N**/999 RDD and eligible for small parcel express service.

2.3.2. Agile Logistics (project code 858) Note: See para 2.3.10 for further guidance.

2.3.3. Two Level Maintenance (2LM—project code 879) Note: See para 2.3.10 for further guidance.

2.3.4. Rapid Parts Movement (RPM—project code 880) Note: See para 2.3.10 for further guidance.

2.3.5. Source of Repair (SOR).

2.3.6. In Place Readiness Spares Packages (project code 122).

2.3.7. Mobility Readiness Spares Packages (project code 123).

2.3.8. Materiel Deficiency Report (MDR) exhibits that ground an entire Mission Designated Series or items that must be evaluated because of fatalities.

2.3.9. Forward Supply Locations (FSL—project code 196).

2.3.10. For repairable retrograde to repair location (Depot or Contractor) items other than (TP-1 with N**/999 RDD) returning to Depot, TOs are authorized to use small package express ground service within CONUS unless specifically directed by AFGLSC or item manager (IM) to use expedited overnight service. Table 2.1 provides the delivery standards for these exceptional shipments.

Table 2.1. Delivery Standards.

EXPEDITED SHIPMENT TIME DEFINITE DELIVERY STANDARDS (IN DAYS)			
RETROGRADE TO REPAIR LOCATION (DEPOT OR CONTRACTOR)		PROCESSING TIME (NOTE 1)	TRANSIT TIME (NOTE 2)
ORIGIN	CONUS		
DESTINATION	CONUS	1	1
	GERMANY AND UNITED KINGDOM	1	2
	ITALY AND JAPAN	1	3
	KOREA, SE ASIA AND OTHER AREAS	1	4
REDISTRIBUTION ORDERS AND LATERAL SUPPORT MOVEMENTS			
ORIGIN	CONUS		
DESTINATION	CONUS	1	1
	GERMANY AND UNITED KINGDOM	1	2
	ITALY AND JAPAN	1	3
	KOREA, SE ASIA AND OTHER AREAS	1	4
ORIGIN	USAFE		
DESTINATION	USAFE	1	1
	CONUS	1	2
	PACAF/SW ASIA/OTHER AREAS	1	4
ORIGIN	PACAF		
DESTINATION	PACAF	1	1
	CONUS	1	3

	USAFE/SW ASIA/OTHER AREAS	1	4

NOTES:

1. Materiel Management and Cargo Movement collective processing standard is 24 hours. This time starts when Materiel Management or Cargo Movement receives an item for shipment processing and ends when the selected carrier receipts for pick up. For 2LM items, 24-hour Materiel Management/Cargo Movement standard starts when Materiel Management or Cargo Movement receives a not reparable this station (NRTS) item from Maintenance for processing.

2. Transit time is calculated from the time stated in specific contracts/tenders, or from the time consignor releases shipment to carrier, or from the time AMC receives shipment from consignor when the consignor and POE are co-located, to time of delivery to ultimate destination.

3. TDD Standards are being changed in DoD 4140.M and will be placed in electronic form to reflect TDD across Integrated Distribution Lanes by theater.

2.4. Mode/Method Eligibility. Mode is a category of movement (e.g., air, surface) and method is a means of movement within a mode, such as motor or rail, AMC channel, small package air carrier, or SEAVAN. See DTR Part II, Appendix GG for complete list of mode/method codes and descriptions. The TO/Shipment planners determine the appropriate mode/method and select the carrier to move the materiel to destination consistent with the delivery requirement. When on-time delivery is not achievable, TO will select carrier/mode with closest performance to target RDD, preferably one that does not exceed the target RDD.

2.4.1. Air. The TO must move AF Expedited shipments via door-to-door commercial air express carrier service when eligible. TOs should consider use of standard next day service versus expedited next day service. Additionally depending on location if small package carrier offers one day ground service within CONUS, this is the preferred method if more cost effective.

2.4.1.1. Other TP2 shipments coded 777 or 555 can move door-to-door air express when this method proves more cost effective than AMC. Rates for comparing WWX and channel airlift over high volume routes are available on AMC's website **https://private.amc.af.mil/A4/WWX/wwx.htm** (click on WWX/IHX Rate Calculators). Current year AMC rates for all channels are available at **http://public.transcom.mil/j8/fin/rates_homepage.cfm**. Include all costs incurred from point of origin to AMC port and to final destination. Use AMC channel service when shipment characteristics preclude movement by commercial carrier express service, or host nation customs does not permit entry by a commercial method or during interrupted services.

2.4.2. Surface.

2.4.2.1. TP2 shipments coded 777 or 555 can move door-to-door small package express carrier ground service within the CONUS when this method proves more cost effective than standard overnight service.

2.4.2.2. TP-3 is shipped via surface modes. TP-3 shipments are not air eligible except for items with short expiration dates to include whole blood, perishable subsistence, biological, batteries, required refrigeration, radioactive, and like items. Shippers must ensure the ATCMD properly identifies these exceptional TP-3 shipments.

2.4.2.3. Commercial air or expedited ground service-modes/methods may be selected when the cost is equal to or less than the normal surface cost mode/method.

2.4.2.4. Deferred Airfreight (TP-4), via AMC, is a possible alternative to surface movement, depending on space considerations.

2.4.3. Deferred Airfreight/TP-4. TP-4 is non-air-eligible materiel moving by military air on a space-available basis at or near the surface/sealift cost. This includes movement of household goods to non-hardlift areas. TOs are encouraged to request deferred airfreight/TP-4 for cargo movement. Pre-clearance must be received from the ACA or port before cargo is shipped to the port for TP-4 movement. Clearance of deferred airfreight requires that TP-4 be shown in the priority field of the ATCMD. TP-4 must also be shown in the priority block of the shipping label. Hazardous, explosive and material requiring special handling in transit cannot be shipped as TP-4 without the prior approval of HQ AMC/A4TC. See DTR Part II for further guidance.

2.5. Carrier Selection. The TO/Shipment planners will apply best value carrier criteria to the maximum extent possible when making carrier selections. Refer to Attachment 1, Terms; and DTR, Part II, Definitions, for additional best value guidance.

2.5.1. For domestic shipments, carriers must be TPPS capable. This is accomplished by carriers establishing a Trading Partner Agreement with US Bank. See DTR Part II, Paragraph 212-C2e.

2.5.2. Carriers, other than USPS, must have an approved tender of service or contract on file (hard copy or electronic) with AMC, GSA, or Surface Deployment and Distribution Command (SDDC). Local air shipment procedures can be established when the TO can document a negative critical mission impact to justify non-usage of AMC-arranged/operated/negotiated airlift. Certain contracts specify mandatory use, with exceptions noted. Select other carriers, not within the scope of a contract, using best value criteria defined in DTR Part II. TOs may use approved munitions carriers, who have FAK rates on file, when it is determined by risk assessment decision guidance in DTR, Part II, that certain types of general commodities should be afforded added protection services. These items include inert (non-explosive) and other non-hazardous items with new technology, high value, or by design may be perceived by the public to be hazardous.

2.5.2.1. The Defense Transportation Coordinator Initiative (DTCI) is a FAR-based, requirements-based contract used at selected Air Force bases identified as high volume shipping activities. The contract is for CONUS to CONUS only, and use of DTCI for shipments from these selected bases is mandatory. Additionally, while not all bases will ship using DTCI, all bases will receive cargo moved under DTCI, including shipments from DLA. Use of DTCI to ship AA&E, Classified, Sensitive, NWRM or protected cargo is prohibited. Additionally, it is restricted to shipments over 150 lbs. The TO forwards requirements to contractor via electronic data interchange from CMOS and the contractor provides mode, and carrier information in a confirmation transaction back to CMOS based on the TO's input of the Mandatory Delivery Date (MDD). DTCI is mode neutral and will select air or surface to meet the MDD for routine or expedited cargo. Additionally, loss and damage claims are handled outside of the normal TDR process. Air Force shipping/receiving activities will refer to the specific instructions for DTCI in the DTR Part II, Chapter 213.

2.5.2.2. Only those individuals identified by the DTCI Contracting Officer (CO) can direct the Contractor to perform. Certified Ordering Officers (COOs) (most are TOs), and CORs can direct the Contractor to perform within the limits of the existing contract, however, only the CO can obligate the Government for performance outside the limits of the contract.. The Air Force COR is 401 SCMS/GUMAA. For further information on DTCI TO's are encouraged to review the DTCI Performance Work Statement (PWS) at: **http://www.transcom.mil/dtci**/.

2.5.3. Commercial air express small-package delivery service through approved AMC contracts and tenders is the norm for Air Force Expedited shipments to meet Air Force sustainment goals. Use AMC approved contracts, tenders, or operating airlift channels for other airlift eligible shipments between CONUS/OCONUS and within OCONUS.

2.5.4. DOD Domestic Express Small Package Service (DESPS)--formerly GSA Multiple Award Schedule Blanket Purchase Agreement (**https://private.amc.af.mil/a4/domexpress/spsindex.html**). High priority shipments that meet the DESPS terms, will move via DOD DESPS carrier(s) to DOD and contract addresses to/from CONUS, Alaska, Hawaii, and Puerto Rico. The DESPS provides time-definite, door-to-door, domestic express delivery of letters and small packages. No single package may exceed 150 pounds gross weight. Therefore, Air Force Expedited shipments destined to/from CONUS, Alaska, Hawaii, and Puerto Rico should be moving by a DESPS carrier(s) from pick-up to delivery at the consigned destination. See Paragraph 5.12.

2.5.4.1. The DOD is a mandatory user of the DOD DESPS, EXCEPT in the following instances:

2.5.4.1.1. DOD shipments between 0 and 500 miles from origin.

2.5.4.1.2. DOD shipments under DOD contracts in effect prior to award of this contract until expiration of the existing contracts or agreements.

2.5.4.1.3. When required by wartime contingency operations.

2.5.4.1.4. When shipments are outside the scope of the contract.

2.5.4.1.5. Individual shipments with a gross weight of 151 pounds or more are outside the scope of this contract.

2.5.5. AMC Worldwide Express (WWX) Small Package Contract (**https://private.amc.af.mil/A4/WWX/wwx.htm**). WWX is an USTRANSCOM commercial contract that provides time-definite, door-to-door, international express delivery of letters and small packages. No single package may exceed 300 pounds gross weight. Service is provided from CONUS (includes Alaska/ Hawaii/Puerto Rico) to OCONUS, OCONUS to CONUS (retrograde routes) and OCONUS to OCONUS (lateral routes).

2.5.5.1. DOD is a mandatory user of WWX.

2.5.5.2. Classified shipments are not authorized for movement by WWX contract service.

2.5.5.3. Movement of hazardous material (HAZMAT) by WWX contract service is restricted. HAZMAT is not covered under WWX basic services. However, very limited HAZMAT service is available. If a carrier handles HAZMAT as part of their regular

commercial practice, then the government is authorized to use that service. If used, the DOD customer will be charged the WWX rate, plus an accessorial fee from the carrier's commercial service guide.

2.5.5.4. Where two or more contract carriers are authorized to serve the same region, use best value criteria as specified in DTR Part II to award shipments. Equal sharing of tonnage IS NOT a requirement.

2.5.5.5. Shippers must provide an in the clear address to ensure delivery. OCONUS APOs, FPOs, and PO box numbers are not acceptable for WWX shipments. Foreign postal codes must be used and may be found at: http://www.bitboost.com/ref/international-address-formats.html#Formats

2.6. Export/Import of Goods

2.6.1. US Import. To ensure shipments flow through US Customs, OCONUS shipping offices must provide the following information on all commercial air shipments.

2.6.1.1. Airway Bill. The first line of the shipper block must identify United States Air Force as the shipper followed by the shipper unit. The consignee block must start with United States_____ (sponsoring military service) followed by the recipient name and address. Providing the sponsoring component command is critical on shipments consigned to commercial contractors and vendors.

2.6.1.2. Commercial Invoices. The commercial invoice will be printed on Air Force letterhead to ensure US Customs can easily identify the shipment as a DOD shipment. Shipper and consignee information must reflect the sponsoring component command per Paragraph 2.6.1.1., a clear detailed description of the item, item value, and a statement of ownership, i.e., Property of the United States Government.

2.6.1.3. American Goods Returned (AGR). US Customs requires a statement identifying AGR assets be printed on the commercial invoice. The complete statement can be found in 19 CFR (Code of Federal Regulations) 10.103 at website: http://www.access.gpo.gov/nara/cfr/cfr-table-search.html#page1.

2.6.2. US Export. To ensure host nation customs clearance and routing requirements are met, refer to DTR, Part V. The DTR, DOD 4500.54G, *DOD Foreign Clearance Guide (FCG)*, CFR Titles and Customs Bulletins can be accessed at the following USTRANSCOM website: **https://business.transcom.mil/j5/j5p/customs/DODcustoms.cfm**.

2.6.2.1. Accurate cargo descriptions and complete addresses are essential requirements for all international shipments of DOD property, especially when commercial transportation is used.

2.6.2.1.1. Use of terms such as Not Otherwise Specified (NOS), Said to Contain (STC), Freight All Kinds (FAK), Consolidated Cargo, General Merchandise, or No Description (Blank) are not acceptable for customs clearance purposes. Also avoid generic descriptions such as "aircraft part," which can cause delays in the customs clearance process. Use the Harmonized Code **http://www.usitc.gov/tata/hts/bychapter/index.htm/** to determine the most descriptive nomenclature based on, NSN, part number, and other data presented by supply activity or vendor.

2.6.2.1.2. For shipments to DOD activities, the correct consignee address can be found in the AF DODAAC Web Management System (**https://dodaac.wpafb.af.mil**). Use the in-the-clear name of the consignee as well as the required DODAAC address.

2.6.2.2. In accordance with 22 CFR 120.5, the export of articles covered by the U.S. Munitions List (USML) is regulated by the Department of State, except as indicated otherwise in the subchapter. If the item is on the USML, it requires a Shipper's Export Declaration (SED) for export. If it is not on the USML (i.e., a general commodity), then no SED is required IAW 15 CFR 30.52. See DTR Part V, Para 508-D for additional information, including how to determine if the item is on the USML or not (**http://www.transcom.mil/j5/ppt/dtrart5/dtr_part_v_504_508.pdf**).

2.7. Preventing DOD Shipments to Restricted Countries

2.7.1. DOD shipments, whether moving organically or commercially, must only be consigned and routed to destinations authorized to receive these shipments. All shipping activities, to include MEO and A-76 organizations, will maintain the most current list of embargoed countries from the Department of State Embargoed Countries List in the following URL: **http://www.pmddtc.state.gov/embargoed_countries**/. TOs will have this list available in all areas involved in the requisition and shipment processes.

2.7.2. The Department of State currently lists both Afghanistan and Iraq as restricted countries; however, in light of current operations, these two countries are exempt from the requirement for unit and MAJCOM/A4 approval.

2.7.3. Shipments in support of on-going or recurring mission requirements to Air Force units located in Restricted Countries not identified in the paragraph above to established and valid DODAACs do not require an authorization for each individual shipment.

2.7.4. The TO will notify the unit commander of any shipments to a restricted/embargoed country and begin a validation process of documentation to ensure the request is from an authoritative source. The unit commander will notify the affected MAJCOM of the request and forward a package with a recommendation to approve or disapprove to the applicable MAJCOM/A4 for signature.

2.8. Increased Liability Coverage and Excess Valuation. The purpose of purchasing increased shipment liability coverage or declaring excess valuation is to increase the loss and/or damage recovery when it is in the best interests of the Government. Specific liability terms, conditions and rules must be known for each commercial carrier or contractor doing business.

2.8.1. The Government is normally considered a self-insurer. Requirements to purchase additional coverage should be minimal. Consider increased liability coverage or excess valuation for prototype and one-of-a-kind items.

2.8.2. TOs must know the shipment unit commodity and value to effectively protect the Government interests. The cost of buying or increasing the level of protective service may outweigh a decision to buy increased liability coverage or excess valuation. In addition, the maximum amount of automatic carrier coverage for loss or damage (no accessorial charges) must also be known before determining a course of action.

2.8.3. Small package express carriers/contractors are not always the most economical method of transport when determining if the added cost to purchase increased liability coverage or excess valuation is a sound decision. Use of small package carrier service, that is mandatory and meets Air Force Expedited shipment requirements, will not be waived for the purpose of purchasing increased carrier coverage by other methods.

2.9. Space Blocking. With the exception of AMC MICAP cargo directly supporting AMC airlift assets, Air Force cargo will not be space blocked on AMC channel missions. Changes to precedence of movement for materiel in the AMC channel will be done through green and purple sheet procedures described in Chapter 3 of this AFI.

2.10. Movement on Organic Airlift. AF organic airlift can be used to move AF MICAP cargo when standard commercial or AMC channels do not meet mission requirements. Protected and hazardous materials will be transported IAW all applicable publications and guidance

2.10.1. Requirement for movement by organic air will be initiated by the AFGLSC and documented using a standard format. The documentation will accompany the DD Form 1348-1A or DD Form 1149. The documentation will identify the appropriate working capital fund (WCF) or SDT CMA TAC to use for any required commercial or AMC channel movement. Local funds will not be used to support any movement to position, deposition or forward cargo identified for organic airlift support.

2.10.2. If the eligible MICAP cargo must move commercially from origin to another location to meet organic lift, the origin TO will process using best value carrier that meets required delivery date and use the provided TAC. Shipment will be marked for the TO at the in-transit node and transshipped in CMOS. The origin shall provide the AFGLSC with shipment details (TCN, P/W/C, SCAC, ETA) upon shipment release.

2.10.3. Eligible MICAP cargo moving on organic air movement will be manifested by the local TO using CMOS. If cargo is trans-loaded to another organic air mission, a new manifest will be generated.

2.10.4. If for any reason the use of organic lift is disrupted (e.g., the eligible cargo misses mission departure time, the organic air mission does not reach its destination) the AF TO at the location with the cargo will request disposition from the AFGLSC 439th Supply Chain Operations Squadron at **439scos.transportation@langley.af.mil.** If no instructions are provided within 18 hours, the TO will process the shipment for onward commercial movement following local MICAP procedures. Cargo will be in-checked and transshipped in CMOS.

2.10.5. AFMC will maintain data for all organic air movement comparing actual end-to-end organic air performance with notional end-to-end commercial and/or AMC performance. This data will show total end-to-end time and transportation cost achieved utilizing organic air and the notional end-to-end cost anticipated if cargo moved via commercial and/or AMC carriage. This data will be provided to AF/A4LM on a quarterly basis.

Chapter 3

SHIPPER, TRANSHIPPER, AND RECEIVER PROCEDURES

3.1. Processing Material for Shipment. The TO processes two types of shipments - MILSTRIP and non-MILSTRIP:

3.1. (LITTLEROCKAFB)Processing Material for Shipment.

3.1.1. MILSTRIP Shipments (DD Form 1348-1A). MILSTRIP shipments are processed through the base level supply system and CMOS. Use DD Form 1348-1A as the shipment planning worksheet for MILSTRIP shipments. Cargo Movement Section action begins on MILSTRIP shipments when documentation and materiel are accepted from Materiel Management Section. The Cargo Movement Section in-checker may accept originating base Materiel Management Section materiel as documented. A piece count is not required unless the materiel is classified, sensitive, hazardous, pilferable, high-value (see Attachment 1), 999/NMCS/MICAP, or it is obvious the count is different from what is documented. Serial numbers must be validated, when visible and accessible. However, in-checkers retain authority to open any boxes offered for shipment to inspect for nature of cargo, safety, contrabands and serviceability of the cargo. When inspection is verified, in-checker signs the shipping document and provides a signed copy to the customer. Use an electronic signature for materiel where the capability exists, i.e., CMOS or the Supply Asset Tracking System.

3.1.2. Non-MILSTRIP Shipments. Non-MILSTRIP shipments are those presented to the TO for shipment that are not processed through the base level supply system. Normally, the organization requesting shipment is responsible to deliver their cargo to the Cargo Movement staging area. Shipment planners may use DD Form 1149, DD Form 250, or a memorandum from the unit to process non-MILSTRIP shipments. Shipment Transportation Priority (TP) will be assigned based on customers' required delivery date. Customers must provide a realistic required delivery date to final destination. Shipment processing time starts when an activity offers a shipment to the Cargo Movement Element for shipping. Shipments that are pre-packaged by the shipper can be accepted by the TO without an additional piece count as long as the shipping documentation includes the statement "Customer Provided Piece Count."

3.1.2.1. When DD Form 1149 is used, all shippers, including Guard and Reserve, must use the automated DD 1149 System, hosted on the website provided at the end of this paragraph. All shippers currently using an automated management system to create shipping documents may continue to do so (e.g. PMEL and engine managers). Attachment 2 provides manual DD Form 1149 instructions for users without computer access. DD1149: https://lsotools.wpafb.af.mil/dd1149/. If the web DD Form 1149 process cannot accurately produce the required information, a manual 1149 is acceptable.

3.1.2.1. **(LITTLEROCKAFB)** Shipments that are not processed through the base level supply system require a DD Form 1149, REQUISITION AND INVOICE/SHIPPING DOCUMENT. All shippers, including Guard and Reserve, must use the Logistics Support Office's automated DD 1149 System, hosted on their Web-Server at **https://lsotools.wpafb.af.mil/dd1149**/ . All shippers currently using an automated

management system to create shipping documents may continue to do so (e.g. PMEL and engine managers).

3.1.2.1.1. **(Added-LITTLEROCKAFB)** The 19 AW host and tenant units will use the DD 1149 Checklist, **Attachment 1**, to regulate non-automated shipments and ensure applicable base program managers approve movement of critical commodities off the installation. Personnel desiring to ship items using DD Form 1149 must report to the LRS Customer Service Section to verify the material meets proposed method of shipment.

3.1.2.2. Review and comply with carrier selection criteria contained in Paragraph 2.5. Commercial air or expedited ground service modes/methods will be selected when the cost is equal to or less than the normal surface cost.

3.1.2.3. Review and comply with shipment clearance procedures contained in Paragraph 3.4. TOs must submit the ATCMD data to the ACA and receive confirmation prior to release of the material to the port.

3.2. Assigning Transportation Priority.

3.2.1. MILSTRIP Shipments. Use Table 3.1. to assign the correct Transportation Priority and determine shipment options.

Table 3.1. MILSTRIP Shipments.

Establishing Priorities for AF Cargo Movement				
MILSTRIP Shipments				
Document	Issue Priority	Trans Priority	Mode of shipment	Method of shipment
DD Form 1348-1A	IPG 01-03 All RDDs, Includes N_, 999, Blanks	1 Air-Eligible	Mode/Carrier Compatible with RDD	AMC Commercial Tender • WWX • Small parcel (air and surface) • Air and Surface Freight
	IPG 04-15, RDD 777, 555, 444, N_, E_, or > 2 days but < or = 8 days (CONUS customer) or > 5 days but < or = 21 days (OCONUS customer) from Requisition Date	2 Air-Eligible	Mode/Carrier Compatible with RDD	AMC Commercial Tender WWX Small parcel (air and surface) Air and Surface Freight

	IPG 04-15 Blank RDD, or RDD > 8 days (CONUS customer) or > 21 days (OCONUS customer) from Requisition date	3 Surface	Mode/Carrier compatible with RDD or Lowest Cost Delivery Alternative if no RDD	Lowest cost small parcel service Commercial carrier with DOD tender DLA CCP Ocean Carrier (SDDC) WWX when cost effective

Note 1: RDD 999 identifies shipments having the most urgent need. It is assigned to NMCS materiel with a supply priority designator of 01-03, and consigned to U.S. Forces overseas and CONUS forces alerted for deployment within 30 days of the requisition date. RDD 999 may not be applied to FMS, Military Assistance Program grant aid, or to retrograde movements. EXCEPTION: Retrograde aircraft engines will have an RDD of 999.

Note 2: RDD 777 with one of the Air Force Expedited project codes (Paragraph 2.3.) should be moved by express service when eligible. Use AMC or fastest available means when not eligible for express service. A list of current US Air Force Project Codes and Nicknames can be accessed on the AFMC/A4 web site
at https://www.afmc-mil.wpafb.af.mil/projectcodes/

3.2.2. Non-MILSTRIP Shipments: See Table 3.2. Assign Transportation Priority for non-MILSTRIP Shipments based on the shippers required RDD. See Paragraph 2.4.2.1.for exceptions to use expedited modes/methods when it is cost beneficial.

Table 3.2. Non-MILSTRIP Shipments.

Establishing Priorities for AF Cargo Movement				
Non-MILSTRIP Shipments				
Documents	Customer requirement	Trans Priority	Mode of shipment	Method of shipment
Form 1149 Memo Requesting Shipment * Expedite shipment	Intra-CONUS/Theater RDD < or = 2 days OCONUS/Inter-theater RDD < or = 5 days	1 Air-Eligible	Mode/Carrier Compatible with RDD	AMC Commercial Tender • WWX • Small parcel (air and surface) • Air and Surface Freight

requests must include supporting justification.	Intra-CONUS/Theater RDD > 2 Days and < or = 8 Days OCONUS/Inter-theater RDD > 5 days and < or = 21 days	2 Air-Eligible	Mode/Carrier Compatible with RDD	AMC Commercial Tender WWX Small parcel (air and surface) Air and Surface Freight
	Intra-CONUS/Theater RDD > 8 Days or blank OCONUS/Inter-theater RDD > 21 days or blank	3 Surface	Mode/Carrier Compatible with RDD or Lowest Cost Delivery Alternative if no RDD	Lowest cost small parcel service Commercial carrier with DOD tender DLA CCP Ocean Carrier (SDDC) WWX when cost effective

Note 1: * Shippers must provide justification when requesting expedited transportation. Justification will include signature of a competent authority (e.g., Squadron Commander). This may be included on the DD Form 1149, or attached memorandum. The TO may waive this requirement in repetitive or other justifiable customer situations. Items subject to airlift challenge as shown in Paragraph 11.3.3.1. should typically not be assigned RDD 999.
Note 2: RDD 999 is assigned for air eligible items that are in non-mission capable status, or are essential to support/repair non-mission capable status assets. Examples of shipments typically assigned a RDD of 999 would include lateral support for a weapons system, parts for a broken fire truck, and similar cases.

3.3. Shipment Planning. Shipment planners determine best value mode/method and select the carrier to move the materiel to destination consistent with the delivery requirement. The shipment planner must consider all of the following:

3.3.1. Shipment identification. Check commodity characteristics.

3.3.2. Transportation Priority. See Paragraph 3.2.

3.3.3. Consignee location and receiving capability. Consult the SDDC on-line web TFG at **https://eta.sddc.army.mil**.

3.3.4. Consignee DOD Activity Address Code (DODAAC) and clear-text address. A DODAAC is a 6-position code that identifies a unit's mailing, shipping, and billing addresses used for requisitioning and shipping material. Air Force DODAACs begin with the letters "E", "F", or "J." For specific DODAAC information, refer to **https://dodaac.wpafb.af.mil**. If the consignee does not have an assigned DODAAC, the non-specific DODAAC F00000 (F plus five zeros) is used. The clear text address of the consignee must then be entered on the TCMD as trailer data. If it is a CONUS shipment and does not have a TCMD, the shipper will ensure the complete clear-text address is included on the shipping documents.

3.3.5. Mode/Method. Shipment planners must comply with Paragraph 2.4.

3.3.6. Movement time standards. See Paragraph 2.3., Table 2.1. and DOD 4140.1-R.

3.3.7. Special handling needs. See Chapter 4 and Chapter 5.

3.3.8. Shipment funding and Transportation Account Code (TAC) or fund cite assignment. See Chapter 7.

3.3.9. CONUS - Appropriate National Motor Freight Classification (NMFC) number and commodity code. Refer to current SDDC Unified Rules Publication (**http://www.sddc.army.mil/public/Global+Cargo+Distribution**/). The NMFC number is in Block 6 and type cargo code used with the NMFC number is in Block 8 of the DD Form 1348-1A.

3.3.10. If shipment requires clearance into an air or water terminal for DTS movement, see Paragraph 3.4. for Air Force clearance requirements. Also see DTR Part II, Paragraph 203-B19 for additional information.

3.3.11. International Shipments. See Paragraph 2.6.

3.3.11.1. "Customs Only" GBL for shipments to Korea. See Paragraph 6.2.4. This does not apply to FMS shipments.

3.3.11.2. See Paragraph 6.2.5. for shipments to Canada.

3.3.11.3. OCONUS to CONUS shipments using unit/base O&M funds. OCONUS shipping activities must complete the ATCMD to include a miscellaneous trailer data record (T_9) with the Standard Document Number (SDN) and Line of Accounting (LOA) on all shipments moving under unit/base O&M funds. See Paragraph 7.2.5. for additional information, particularly pertaining to obtaining a unit TAC for movement provided by AMC/SDDC (airlift/sealift). AMC CONUS aerial ports will use the SDN and LOA for onward CONUS movement using the CBL payment process under TPPS. On the first T_9 line enter the letters "SDN" followed by the data. Next enter letters "LOA: followed by data. Use as many T_9's as necessary. Enter a sequence number beginning with one for each T_9 entry.

3.3.12. Selection of Best Value Carrier. See Paragraph 2.5. and Attachment 1, Terms.

3.3.13. Movement by United States Postal Service (USPS). Make mail movements according to DOD 4525.8-M/AF Supplement 1, *DOD Official Mail Manual*. TOs should consider use of USPS as they would any other authorized carrier. Absence of ITV capabilities may constrain the use of this method for movement. Before using USPS, check with your postal representative for availability of ITV service. See Paragraph 5.3.2. for use of USPS for movement of small quantities of small arms and sensitive/protected cargo.

3.3.14. Ensure a TCN is assigned to every shipment. TCN guidance can be found in DTR Part II, Appendix L (**http://www.transcom.mil/j5/pt/dtrpart2/dtr_part_ii_app_l.pdf**). Use the following TCN guidance for non-MILSTRIP shipments.

3.3.14.1. TCNs for non-MILSTRIP Shipments: Place a record of the transaction into your locally developed TCN system. The TCN register can be generated in CMOS as required. The information should include but is not limited to the following:

3.3.14.1.1. Date--Julian

3.3.14.1.2. TCN--17 digit alphanumeric code constructed according to DTR, Part II.

3.3.14.1.3. RDD--A calendar date that specifies when materiel is actually required to be delivered to the requisitioner. The RDD field may contain 999, N--, E--, 555 or 777 to indicate expedited handling required. A blank RDD field indicates routine handling. RDD 444 is used for collocated stock and does not require the fastest possible service of the supply and transportation system.

3.3.14.1.4. From--The activity offering the materiel for shipment.

3.3.14.1.5. To--DODAAC of the Consignee or the "in-the-clear-" address of the recipient. See Note 1.

3.3.14.1.6. Mode--Mode code taken from DTR, Part II

3.3.14.1.7. Remarks--Example name and phone number of person and activity directing or authorizing shipment.

3.3.14.2. Example of TCN Record:

Julian Date	TCN Number Assigned	RDD	From	To
7111	FB23008212X301XXX	777	AF Avionics Lab	FB2059

Wt	Cube	Mode	Remarks
85	4	B	Maj Joan Smith/AFMC/LOT/71234

NOTE: OCONUS small package contract carrier services shipments must reflect the international foreign postal code (zip) of the consignee. For assistance, see the following website: http://www.bitboost.com/ref/international-address-formats.html#Formats

3.3.15. Shipment Consolidation. Consolidate shipments to the maximum extent possible, consistent with delivery requirements, time standards, and DTR direction.

3.3.15.1. Consolidate shipments using the following criteria:

3.3.15.1.1. Do not consolidate serviceable and unserviceable materiel.

3.3.15.1.2. Must have the same TAC or fund citation.

3.3.15.1.3. Must be compatible with other materiel.

3.3.15.1.4. Must be consigned to the same ultimate consignee.

3.3.15.1.5. Must not impact commercial express movement eligibility.

3.3.15.1.6. Do not consolidate different project codes.

3.3.15.2. Consolidated 999/NMCS/MICAP shipments must meet the following additional conditions.

3.3.15.2.1. No delay in movement occurs for any item.

3.3.15.2.2. Must maintain ITV over each TCN.

3.3.15.3. FMS Consolidation. The following conditions apply to FMS in addition to the above:

3.3.15.3.1. Have the same U.S. Service Code.

3.3.15.3.2. Must be the same recipient country.

3.3.15.3.3. Must have the same mark-for/ship-to/freight forwarder location.

3.3.15.3.4. Must have the same FMS case designator.

3.3.15.3.5. Must have the same Delivery Term Code (DTC).

3.4. Shipment Clearance Requirements.

3.4.1. CONUS Clearance Requirements. The TO must clear shipments moving on military owned or arranged airlift and sealift through the appropriate clearance agency prior to movement to the aerial or water port of embarkation (APOE or WPOE). See Paragraph 3.4.1.1.2. for airlift clearance exceptions and Paragraph 3.4.4.1. for sealift clearance exceptions. Refer to the DTR, Part II, for the appropriate air and water clearance authorities.

3.4.1.1. 635 SCMWWPOL/ACO, Wright-Patterson AFB, OH, plans and executes the Air Force ACA functions for CONUS originating shipments planned for AMC channel lift to overseas points. Operational functions are delegated to the two regional ACA Shipper Service Liaison Offices (SSLO) co-located with AMC at Dover AFB, DE, (ACA-East) and Travis AFB, CA, (ACA-West). The responsibilities of the SSLO include but are not limited to coordinating movement to the APOE with both shipper and project managers; maintaining visibility over cleared air and surface cargo; providing shipment status to tracer requests; assisting in the resolution of cargo discrepancies; enforcing SDT savings programs such as air challenges; use of deferred airfreight and performing cargo pre-clearance for shipments requiring special handling. Shipments that are not properly cleared through the SSLO, diversion to surface transportation or turn-in to a Defense Reutilization Management Office could occur. See DTR, Part II, Appendix R, for the SSLO hours of operation.

3.4.1.1.1. Use the fastest means available when transmitting the ATCMD to the appropriate SSLO. Air Force Bases will use CMOS to clear shipments. If no other automated means are available or if CMOS is down, shippers will use website (**https://lsotools.wpafb.af.mil/atcmd**/) to submit ATCMDs electronically.

3.4.1.1.2. The following exceptions require that the shipper fax an ATCMD to the ACA prior to releasing the shipment unless the shipper is using the website ATCMD form in instances cited below. If the website is not being used for cargo clearance, then ALL of the shipments listed below must be faxed to the ACA.

3.4.1.1.2.1. Explosives. Shipments of explosives may be subject to an explosive clearance number, which the ACA must obtain for the shipper prior to release of shipment. Annotate explosive clearance numbers on the Military Shipping Label. Web users clearing explosives will receive a screen message to hold the shipment until contacted by the ACA.

3.4.1.1.2.2. Dog Shipments (military working dogs with handler). The ATCMD will include the dog's name, ID tag number, type of dog (i.e., drug, explosive, patrol), and handler's name and rank. Also, indicate on the trailer records how the dog and handler will arrive at the aerial port (commercial flight number). Dog shipments must be spaced blocked through AMC by the shipping activity.

Website users will be prompted to enter the mission number on which the dog and handler are space blocked. For CMOS users, enter the mission number on a T_9 line. As long as all the above information is entered to the ATCMD web form, the shipment is cleared for airlift. Guidance to space block through AMC can be found in AMCI 24-101, Vol 9, para 13.5: **http://www.e-publishing.af.mil/shared/media/epubs/AMCI24-101V9.pdf**.

3.4.1.1.2.3. Courier shipments. Include name and rank of courier(s). As long as all the required information is entered to the ATCMD web form, the shipment is cleared for airlift.

3.4.1.1.2.4. Ration shipments may be cleared through the ATCMD web form as long as trailer records identify icing and other special handling requirements.

3.4.1.1.2.5. Blood medical emergency shipments must be faxed to the ACA.

3.4.1.1.2.6. Household goods shipments to other than hardlift areas with message of approval from JPPSO-SAT must be faxed to the ACA, unless being cleared as deferred airfreight/TP-4.

3.4.1.1.3. For AMC airlift, send the ATCMD to the appropriate CONUS service ACA or OCONUS designated theater ACA via e-mail or fax. The preferred method is by electronic transmission. See DTR, Part II, and OCONUS MAJCOM guidance. The LSO website listed in Paragraph 3.4.1.1.1. may be used to clear shipments through the USAFE ACAs.

3.4.1.1.4. For CONUS export sealift, send the ATCMD to SDDC Operations Center, Ocean Cargo Clearance Authority (OCCA) booking office located at Fort Eustis, VA. For OCONUS sealift requirements send to the appropriate Theater CDR designated Water Clearance Authority (WCA). Use the SDDC provided Integrated Booking System software or submit on DD Form 1086, Export Traffic Release Request. The preferred method is by electronic transmission.

3.4.2. Clearance of Shipments into CONUS Military Air Terminals. The TO requests ACA clearance of cargo planned for AMC channel airlift prior to cargo release to the APOE. To request a clearance, submit the ATCMD data to the sponsoring service ACA. DTR, Part II contains specific clearance instructions.

3.4.2.1. The Air Force ACA clears or challenges the request for air movement. The requisitioner has up to two calendar days to justify airlift of challenged shipments. The shipping TO will hold the shipment pending the challenge decision by the ACA. In the event airlift justification is insufficient, the TO will divert the shipment to surface movement.

3.4.2.2. Air Force sponsored TP-1 and TP-2 shipments are airlift eligible. TP-3 is not air eligible, except for short expiration date items (see Paragraph 2.4.2.). The most current airlift eligibility and challenge procedures are accessed from the 591 SCMG website https://www.my.af.mil/gcss-af/USAF/ep/globalTab.do?channelPageId=s6925EC13407A0FB5E044080020E329A9&parentCategoryId=p6925EC1555850FB5E044080020E329A9click on Library >> Policy >> Airlift

Policy. See Paragraph 11.3. for the airlift eligibility and challenge procedures at time of publication of this AFI

3.4.3. Clearance of Shipments into OCONUS Military Air Terminals. The TO requests ACA clearance of cargo planned for movement from or within an overseas area via AMC prior to release of the materiel to the port. Furnish ATCMD data to the ACA designated by the overseas theater MAJCOM for acceptance decision. DTR, Part II, and MAJCOM procedures provide ACA responsibilities and guidance governing clearance of shipments into air terminals.

3.4.4. Clearance of Shipments into CONUS Designated Water Terminals. The TO requests WCA clearance of cargo planned for direct delivery to a WPOE prior to movement of the materiel. WCA clears cargo offered for export from the CONUS ports. DTR, Part II, contains procedures for shipment clearance into water terminals.

3.4.4.1. When sealift eligible cargo is not sufficient enough for container or flatrack loading at origin, send to a Consolidation and Containerization Point (CCP) for those shipments that qualify. These shipments are exempt from the normal sealift clearance process. DLA operates a CCP on the East and West Coast of the United States. The East Coast CCP is the Defense Distribution Depot Susquehanna, New Cumberland, PA, (DDSP-W25N14). The West Coast CCP is co-located with the Defense Distribution Depot San Joaquin, Tracy, CA, (DDJC-W62N2A). The DODAAD, identifies by DODAAC, those destinations served by each of the CCPs. The DTR, Part II, contains CCP procedures.

3.4.5. Clearance of Shipments into OCONUS Designated Water Terminals. The TO requests WCA or OCCA clearance on all cargo planned for movement from or within an overseas area via MSC. Clearance procedures are in DTR, Part II.

3.5. Green Sheet Procedures. Judicious application of Green Sheet procedures is essential to preserve the effectiveness of its intent. This is a process where specifically identified cargo in the AMC system may gain movement precedence over other priority cargo of the sponsoring Service, including 999 shipments. Use it when expedited movement of specific shipments is in the national interest, and the ACA certifies that it as an operational necessity. Green Sheet applies to the final destination APOD.

3.5.1. Air Force CONUS activities submit AMC airlift export requests to the ACA, Wright Patterson AFB, OH (refer to Paragraph 3.4.1.1.), and overseas activities submit to the designated theater ACA. The ACA is the only activity authorized to levy Green Sheet action with the aerial port. Blanket application for Green Sheet action is not authorized. HQ AMC must have Green Sheet procedures in place at all aerial ports.

3.5.2. Green Sheet requests must include TCN, pieces, weight, cube, consignee DODAAC, APOE/APOD and valid reason for Green Sheet action (i.e., aircraft down, work stoppage). Vague statements such as “urgently required” are not sufficient to warrant Green Sheet action. Customers must be specific regarding their urgency of need. The Green Sheet request memorandum must be signed by an O-6 or above.

3.5.3. Upon approval, the CONUS ACA will send the approved Green Sheet Request to the Customer Support Branch (CSB) at the CONUS aerial ports, who will complete AMC Form

101, Green Sheet Request. At the OCONUS aerial ports, the ACA will provide the completed AMC Form 101 to the Air Terminal Operations Officer (ATOC).

3.5.4. AMC will assure airlift policy supports timely processing of Green Sheet Requests and provides coverage through the final APOD.

3.5.5. DELETED

3.6. Purple Sheet Procedures. The Purple Sheet process authorizes specifically identified cargo in the AMC system in transit to the Combatant Command (COCOM) area of responsibility (AOR) to gain movement precedence over other priority cargo in transit to the COCOM AOR, including 999 and Green Sheet shipments, regardless of service lane or arrival date at the APOE. The COCOM requires the ability to prioritize sustainment cargo during Lines of Communication (LOC) stress or during shifts of contingency/combat operations. The intent is to outline a process for the supported combat command to prioritize sustainment cargo already on hand at an APOE for subsequent flow into the COCOM area of responsibility per the Defense Transportation Regulation, Part III, Chapter 304.2a(3). The COCOM utilizes Purple Sheeting to expedite movement of specific shipment(s) of national interest and operational necessity. Purple Sheet applies from initial identification to the shipment's final destination APOD.

3.6. (LITTLEROCKAFB)Same Day Service (SDS) criteria.

3.6.1. The COCOM J4 approves Purple Sheet request and forwards to COCOM Deployment Distribution Operations Center (CDDOC). CDDOC will forward after coordination to the US Transportation Command (USTRANSCOM) Deployment Distribution Operation Center (DDOC). The DDOC tasks the 618 Tanker Airlift Control Center (TACC), who in turn tasks the applicable Aerial Port (APOE). The Aerial Port APOE will info the service Airlift Clearance Authority (ACA). No blanket shipment or plane load Purple Sheet request will be approved.

3.6.1. **(LITTLEROCKAFB)** All SDS shipments will be approved by the Maintenance Group Operations Officer or Maintenance Superintendent if the shipment is a MICAP, 999, or Agile Logistic shipment and coordinated through the 635th Supply Chain Management Group. The Transportation Officer will make the decision to use SDS when base O & M funds are involved.

3.6.2. Aerial Port procedures. The only authorized Purple Sheeting authority to the Aerial Ports will be the 618 TACC. Once the Aerial Port is tasked by the TACC the following actions will occur:

3.6.2.1. The Air Terminal Operations Center (ATOC) coordinates the request with the applicable work centers (i.e., Load Planning, Capability Forecasting, or Air Freight) to confirm that the cargo is on hand at the APOE and movement ready.

3.6.2.2. ATOC notifies the service ACA or Customer Service Branch (CSB) for CONUS ports of Purple Sheet cargo.

3.6.2.3. If applicable the CSB or ACA changes the priority and RDD fields in the Global Air Transportation Execution System (GATES) to read "1" "999" and enter the words "Purple Sheet as of XXXXZ" in the applicable trailer (TX1) data fields. If no CSB or ACA assistance is available, ATOC will direct the Air Freight section to accomplish the system changes. Since no special priority code exists for Purple Sheet cargo, adding the

information to the trailer data fields above is key to identifying the cargo as Purple Sheet for ITV purposes.

3.6.2.4. Stage loose shipments in a specific warehouse location for ramp services or task the Special Handling work center to upload. These shipments are high-visibility, so it is imperative that the Aerial Port leadership ensures expeditious and well-coordinated movement.

3.6.2.5. Plan movement on the first available mission. Purple Sheet cargo will not displace cargo already manifested on departing aircraft, unless directed by TACC.

3.6.2.6. Manifest Purple Sheeted cargo separately with markings "Purple Sheet Cargo."

3.6.2.7. Every effort will be made to release the cargo at its end destination as swiftly as possible upon aircraft arrival.

3.7. Purchase of additional liability coverage or excess valuation. The following steps should be considered when deciding on the purchase of additional cargo liability coverage or excess valuation on individual shipment units (also see paragraph 2.8):

3.7.1. Identify commodity type and value of the shipment unit.

3.7.2. Compare to the maximum liability or valuation coverage offered by the carrier's contract, tariff or tender, without paying accessorial charges for added coverage.

3.7.3. Determine the shipment cost difference with and without increased liability or excess valuation coverage.

3.7.4. Consider cost of purchasing or increasing the level of protective service versus purchasing increased coverage.

3.7.5. Consider your selected best value carrier's track record on loss/damage.

3.8. Same Day Service (SDS) criteria. Prior to utilizing SDS, all other movement methods required for expedited movement will be explored. SDS will not be considered as a normal means for movement and considered only as an exception to next day service and only used in dire circumstances (i.e. mission failure). SDS moves via scheduled commercial air carriers and does not include guaranteed arrival time. Weight/size limits and other restrictions such as destination, additional charges, etc. will vary per carrier and must be verified and agreed upon prior to pick up. Shipping customers will provide a destination contact name, commercial and/or DSN contact number and an in-the-clear address for the consignee before the shipment is accepted by the TO for transport. Use of SDS constitutes the consignee must be available at the time of delivery to accept the shipment. Use of this service does not preclude the carrier from having an approved HQ AMC tender on file or HQ AMC approval for a one-time rate quote. For exceptions, see DTR, Part II. The following criteria must be met for use of SDS and base TO makes the final decision.

3.8.1. Shipment must have an Agile Logistics Project Code or an RDD of 999, N_ or E_.

3.8.2. SDS cannot be used if actual use of the item will not occur before normal next day delivery service. Exception: Shipments delivered to an aerial port for an overseas AMC flight.

3.8.3. The individual requesting SDS must provide written or email justification to the origin TO from a 0-6 or equivalent to verify urgency of movement. This may be delegated to the senior duty officer if 0-6 signature cannot be obtained to meet critical mission requirements. Supporting documentation will include a brief justification, named consignee, required delivery date and signature block. Blanket requests are not authorized.

3.8.4. The TO will maintain one copy of the justification with the shipping document and one copy will be included with the shipment packing list.

3.8.5. TO/Designated TA must certify (see Figure 3.1) that all services were performed, retain a file copy with shipping documentation and forward a copy of the certificate to the requesting organization.

Figure 3.1. Certification of Same Day Service.

MEMORANDUM FOR

SUBJECT: SAME DAY SERVICE

I certify that requested services were performed for _____, ____, by _____,
(TCN) (TAC) (SCAC)

_____/_____, _____/_____, _____.
(PICK UP DATE) (TIME) (DELIVERY DATE) (TIME) (CARRIER'S TRACKING NO)

Total Cost $_____

_____
(TO/DESIGNATED TA)

3.9. Express Carrier Shipment Documentation. The TCN must be entered in the shipper reference field (17 positions) on the commercial bill of lading to provide ITV. The following additional procedures will be used for TPB purposes:

3.9.1. TCNs are automatically entered at CMOS sites using the standard Industry Information Processor (I2P) capability. I2P is described in Attachment 1.

3.9.2. The TCN on the carrier waybill alerts the carrier tracking system to forward shipment information to DOD in transit visibility systems as well as allow for TCN tracking using the commercial carrier's tracking system. The TCN links express carrier and shipper information systems and provides data for pipeline analysis.

3.9.3. The billing TAC in the reference field will help track billing information and ensure invoices are sent to the correct paying office.

3.9.4. For non-I2P transactions, enter the TCN in the first 17 positions of the field, enter one space, and then enter the TAC in positions 19-22. Spaces, other than the one between the TCN and TAC or additional characters not part of the TCN or TAC, should not be included. Data must be entered in this order either by using carrier-provided software or filling out the

air waybill manually. An example of a correctly entered TCN and TAC: FB483382120189XXX F2RS (ensuring one blank space between "XXX" and "TAC").

3.10. Releasing Freight

3.10.1. REPSHIP. See Paragraph 5.11.

3.10.2. RFID. See Chapter 18.

3.10.3. Billing. See Chapter 12.

3.11. Receiving Freight. 999/NMCS/MICAP shipments are receipted and processed 24 hours a day, 7 days a week.

3.11.1. Receiving tasks at AMC aerial port bases may be performed at either APS or LRS facilities to maximize efficiencies. In which organization this process resides at, must be approved by AMC/A4 for each location. All materiel arriving at installations, to include AMC strategic ports, will be in-checked into the appropriate systems of record.

Table 3.3. Consignee Pickup Time Standards

PRIORITY	PICKUP TIME (Hours/Days)
999/MICAP/NMCS	12 Hours from notification
All other TP1	2 duty days
TP2	3 duty days
TP3	5 duty days

3.11.1.1. As a minimum, customers will accomplish the following when picking up property from TO:

PRINT NAME
SIGN NAME
UNIT
CONTACT PHONE NO.
DATE
TIME
(Electronic signature can be used in lieu of the preceding when capability exists).

3.11.2. When property arrives at the receiving location, cargo must be verified, off-loaded, cargo inspected, special materiel identified and segregated (once segregated the physical materiel and documentation will be worked together), in-checked in transportation systems, materiel inspected, processed in materiel management system of record and moved to appropriate holding locations. All incoming property will be processed within 24 hours. ARC and contracted operations will comply with minimum requirements established in DoD 4140.1-R guidance and this instruction. Local procedures will be developed to accommodate unique circumstances where receipts cannot be processed by the end of the duty day. Procedures must detail how materiel on the installation is visible to after-hours support. Caution: Ensure appropriate personnel protective equipment (PPE) is utilized while handling materiel.

3.11.2.1. AF activities will handle Domestic Express Small Package Service (DESPS) carrier deliveries as controlled materiel until determined otherwise. All Personnel will ensure controlled materiel remains in physical custody of authorized personnel until secured in a controlled area.

3.11.2.2. Off-loading Truckload Shipments. Truckload shipments should be off-loaded at the point of use or consignee facility. Personnel assigned to the Receiving Element will assist consignees in quickly servicing commercial carriers and completing required documentation.

3.11.2.3. When in-checking, the Receiving representative will acknowledge the number and condition of containers received, annotate date and time of receipt, and any over, short and damages, or other discrepancies on the transportation documents. Verify that the carrier has provided special services and equipment when requested and identified on the transportation documents. The carrier representative must acknowledge any annotations by signing the documents. For misdirected shipments, refer to Chapter 10, Paragraph 10.10. for appropriate handling procedures.

3.11.2.3.1. Receiving Classified, Protected Sensitive and Controlled Cryptographic Cargo, Arms, Ammunition and Explosives (AA&E), and Nuclear Weapons Related Materiel (NWRM), will be accomplished IAW Chapter 5 of this instruction.

3.11.3. **Inspecting Cargo/Property (MILSTRIP Materiel)**

3.11.3.1. Receiving personnel will open all containers to verify information.

3.11.3.2. Receiving activities will utilize approved DoD shipping/receiving documentation for verifying item identification and processing receipt transactions. Compare documents to the property received.

3.11.3.3. All copies of source documents for classified items must be stamped or handwritten in red ink with the words "Classified Item." The receiving document is not classified material; only the property is classified. **For further information regarding receiving TPS shipments,** See Chapter 5 of this instruction.

3.11.3.4. When the controlled item code in the system does not correspond to the security classification indicated on the accompanying documentation, Receiving personnel must immediately notify LRS Customer Support Liaison Element. LRS Customer Support is responsible for determining and assigning the correct controlled item codes. Upon notification of the correct controlled item code, Receiving personnel will then process the transaction accordingly.

3.11.3.5. If there is evidence of tampering, inspect/verify the contents of the package. This inspection will include opening all containers to conduct a bare asset inspection of all controlled materiel and physically verify the item identification on the actual property to the receipt documentation.

3.11.3.6. Open all containers and physically verify serial numbers for all small arms/light weapons (SA/LW) regardless of whether the container is sealed or not.. After verifying serial numbers, place the items back in the original container. Re-seal, ensuring serial numbers are identified on the outside of the container. Block 27 of the DD Form 1348-1A of the receiving document must be signed by the in-checker.

3.11.3.7. Electrostatic Discharge Sensitive Items/Electrostatic Discharge (ESD). When ESDS items are received, the receiving in-checker will visually inspect the container for damage. For further information regarding receiving ESD shipments, see Chapter 8 of this instruction.

3.11.3.8. Consolidated shipments. Verify all requisitions within a consolidated shipment. If all requisitions within the consolidation are not received or an overage is discovered, a Supply Discrepancy Report (SDR) must be accomplished.

3.11.3.9. Markings, Tags, and/or labels on the outside of the container/package must match the DD Form 1348-1A, Issue Release/Receipt.

3.11.4. **Processing Materiel**

3.11.4.1. TPS shipments must be handled as the first priority with regards to delivery, offloading, and security. Receipt processing will follow a priority sequence IAW UMMIPS. MICAP receipts will be processed ahead of other transactions.

3.11.4.2. When an external organization receives property that bypasses central receiving, the organization will submit signed copies of all transportation and receiving documents to the supporting Receiving activity within 24 hours. Exception: Air Force Vehicle Management Team (AFVMT) will process vehicle receipts and provide fleet management support to installation fleet managers.

3.11.4.3. **Local Purchase Receiving.** Local purchase receipts must be processed to take advantage of discounts and to avoid interest payments.

3.11.4.3.1. Due to contractual regulations, specific (alternate) processes and procedures must be followed for receiving locally purchased (LP) items in the retail supply system. Follow specific procedures for receiving bulk deliveries, overages, shortages, unsuitable substitutes, misidentified/unserviceable property and transportation discrepancies.

3.11.4.3.1.1. Bulk Delivery. Civil Engineering items such as gravel or cement and Base Fuels Items such as liquid oxygen, liquid nitrogen, and deicing fluid may be delivered directly to dispersed job sites or to Base Fuels Management Office (BFMO) tanks respectively.

3.11.4.3.1.1.1. Civil Engineering Items. Only technically trained Civil Engineering personnel will receive and sign for bulk items delivered to job sites.

3.11.4.3.1.1.2. Base Fuels Related Items. The BFMO inspects, accepts, and receipts for bulk delivery of liquid oxygen, liquid nitrogen, and deicing fluid delivered into BFMO tanks. These are FB (supply) versus FP (fuels) account items; however, the BFMO serves as the receiving agent and is responsible for signing all receipt documentation. The LRS/Accountable Officer and BFMO will determine if it is more efficient to process the associated transactions at the BFMO, or to forward the documentation to Receiving for processing.

3.11.4.3.1.2. Processing Local Purchase Receipts for Overages. An SDR will be prepared on all local purchase overage receipts, regardless of extended price, except when local purchase documentation (DD Form 1155) is annotated with an

excess quantity clause and the extended cost is less than $250.00. Forward the SDR to LRS Customer Service.

3.11.4.3.1.3. Excess Receipt Quantity Less than $250 with Excess Quantity Clause. No SF 364 is required when the extended price of an excess receipt quantity is less than $250 and the DD Form 1155 is annotated with an excess quantity clause. LRS Customer Support will process an off-line SDR with an advice code 2E for the overage.

3.11.4.3.1.4. Excess Receipt Quantity Greater than $250 or No Excess Quantity Clause. A SF 364 is required on all local purchase receipts with an overage greater than $250 and regardless of the extended price when no excess quantity clause is included in the local purchase documentation.

3.11.4.3.1.5. Processing Local Purchase Receipts for Shortages. A SDR will be prepared on all local purchase shortage receipts, regardless of extended price.

3.11.4.3.1.6. Unsuitable Substitute, Misidentified or Unserviceable Property. When materiel received is an unsuitable substitute, is misidentified, or in unserviceable condition, prepare and forward a SF 364 to LRS Customer Support.

3.11.4.4. Special Procedures for Receipt of Industrial Plant Equipment and other Materials that must be installed by a commercial contractor.

3.11.4.4.1. Items that are to be installed equipment on real property (RPIE) will not be processed by central receiving. This materiel will be delivered to/accepted by the facility custodian or project manager and accountability will be maintained on RPIE records.

3.11.4.4.2. The CA/CRL custodian is responsible for notifying Receiving that materiel has been received when the items by-pass Receiving. A copy of the receipt document must be provided and the receipt/DOR will be processed to establish accountability.

3.11.4.4.3. When CA/CRL accountable materiel is received requiring contractor installation and an installation delay is expected, accountable processing must be coordinated with the equipment custodian and the equipment management function. Installation delays may include (but are not limited to) facility still under construction, contractor not available, etc. A copy of the receipt document must be provided and the receipt/DOR will be processed to establish accountability.

3.11.4.5. Local Manufacture Items. Local manufacture receipts will be processed by the Flight Service Center.

3.11.4.6. Shelf Life Items. When shelf life items are received, they must be examined for currency of the expiration or inspection/test date. Receiving documents will have the shelf life expiration date(s) written on document and be signed or stamped by a limited inspector to assure that the shelf life data reflected on the tag/label and paperwork are correct.

3.11.4.6.1. Items Not Required. If the item is NOT required at the off-base location, the off-base representative will write ITEM NOT REQUIRED on the receiving

document and forward the property and document to the computer support base (host) for processing.

3.11.4.6.2. Items Required. The LRS/Accountable Officer at the host will direct one of the following options for processing items needed at the off-base location:

3.11.4.6.3. Option 1. The organization representative must sign the receiving document (in block 22 of the DD Form 250, or block 27 of the DD Form 1348-1A, or line 28 of the computer generated DD Form 1348-1A) and cross reference the receipt to the due-out document number that it will satisfy. Once the receiving documents are cross-referenced and signed, forward them to the computer support base for processing.

3.11.4.6.3.1. . Cross Reference Receipt to Due-Out Document Number. To simplify processing at the computer support base, Block 27 of the DD Form 1348-1A will be used to record the due-out document number being satisfied by the receipt. If multiple line items are involved, the due-out number may be recorded directly below the receiving document line item number or on a cross-reference listing attached to the receiving document.

3.11.4.6.3.2. Host Base Responsibilities. Receiving personnel at the computer support base will prepare the receipt inputs. Receiving will enter TEX code Y in position 51 and the due-out document number in positions 60-73 of the receipt input. Receiving will then process the document and forward it to Customer Support.

3.11.4.6.3.3. Option 2. When materiel arrives, off-base personnel will notify host base Receiving personnel by telephone or message. The following information will be provided so the receipt can be processed: Stock number of item received, Quantity shipped, Quantity received, Requisition number, and Organization due-out document number if release of a specific due-out is desired.

3.11.4.6.4. Host Base Responsibilities. Receiving personnel at the host base will prepare and process a receipt input with TEX code Y in position 51 and the appropriate due-out document number in positions 60-73. Receiving will maintain an informal log that will contain the information above and the date each receipt was processed.

3.11.4.6.5. Verifying the Documentation. Off-base personnel will immediately forward the receiving document to the host base receiving function for verification. After verifying this document against the log and ensuring the document contains all necessary entries, Receiving will forward the receipt documentation to Customer Support. NOTE: All of the above steps must be processed promptly. Delinquent documents must be avoided and computer records must be kept up-to-date.

3.11.4.7. Warranty/Guaranty and Contract Repair Services. Items under warranty or guaranty are identified on the containers, as required in MIL-STD 129P. Warranty/Guaranty items will be processed as specified in TO 00-35D-54. Receiving personnel will ensure that all documentation and markings on warranty/guaranty items are perpetuated. Exact procedures and checklists to ensure warranties/guaranties are fully utilized will be locally developed.

3.11.4.8. When the Receiving Section receipts for cargo from carriers for base, tenant or contractor organizations, the items will be turned over to Documented Cargo Operations in a timely manner for receipt to the ultimate consignees. If Documented Cargo Operations is not used or unavailable, ultimate consignees are responsible to pick up their shipments in accordance with time standards shown in Table 3.3. below. Receiving personnel will annotate on the receiving document the date, time and name of the person contacted for pick-up. Capability and resources permitting, Deployment and Distribution personnel will develop local procedures to assist consignees in this process.

3.11.4.9. As a minimum, customers will accomplish the following when picking up property from the Receiving Section:

PRINT NAME
SIGN NAME
UNIT
CONTACT PHONE NO.
DATE
TIME
(Electronic signature can be used in lieu of the preceding when capability exists).

3.11.4.10. Degraded Operations. When the retail supply system computer is not operational, priority receipts should be processed as described in AFMAN 23-110, Vol 2, Pt 2 chapter 32, and section 32A.

3.11.4.10.1. Receiving activities will participate in degraded operations control team. The individuals selected for the control team should be at least a 5-level in the grade of Senior Airman or civilian equivalent. They must also possess the knowledge required to quality control documents and perform offline processing.

3.11.4.10.2. LRS sections will review priority receipts, determine appropriate actions, and return receipts the Receiving Element with instructions to reprocess within 24 hours or on the next normal duty day.

3.11.5. When in-checking, the TO representative will acknowledge the number and condition of containers received, annotate shortages, damages, or other discrepancies on the carrier's freight bills and verify that the carrier has provided special services and equipment annotated on the bill of lading. Annotate date and time of receipt on the transportation documents for inbound freight shipments. Have the carrier representative acknowledge any annotations by signing the carrier delivery receipt and consignee copy. Take necessary action to correct discrepancies or file a claim against the carrier if appropriate. For misdirected shipments, refer to Chapter 10, Paragraph 10.10. for appropriate handling procedures.

3.12. Tracing Shipments and Reporting Discrepancies. See Chapter 10.

3.13. Other Shipment Requirements.

3.13. (LITTLEROCKAFB)Other Shipment Requirements.

3.13.1. Aircraft Engine Shipment and Receipt. The TO must process documentation on aircraft engines for movement according to T.O. 00-85-20, *Engine Shipment Instructions*. Commercial vehicles moving aircraft engines must have both an air-ride tractor and trailer in

operating condition when required by T.O. 00-85-20. The TO and Base Engine Manager will develop and publish local written procedures to ensure engine shipment receipt and a thorough visual inspection process meets mission requirements. See Paragraph 3.2.1., Note 1 for movement of retrograde aircraft engines.

3.13.1. **(LITTLEROCKAFB)** 19 LRS Cargo Movement personnel will ensure all engine shipments/receipts comply with requirements outlined in T. O. 00-85-20 and AFI 24-203.

3.13.1.1. **(Added-LITTLEROCKAFB)** The Base engine manager will be notified at the earliest possible time of an engine shipment scheduled or actual arrival. The Base Engine manager or representative will ensure a timely inspection and pick-up of the engine. If damage is noticed prior to the off load of an engine, 19th LRS personnel will notify the base Engine manager of the damage prior to removal from the carrier's equipment.

3.13.1.2. **(Added-LITTLEROCKAFB)** Due to the limitations in loading and safety factors, engines will be shipped only IAW T.O. 00-85-20. All engines will be inspected prior to loading for required markings IAW T. O. 00-85-20, Para 4.2.

3.13.2. Munitions Shipment and Receipt. The TO must coordinate with installation munitions and safety personnel on local written procedures to ensure proper documentation, movement, and receipt-handling instructions are available. See Paragraph 2.5.2. for guidance on carrier selection for inert (non-explosive) movements.

3.13.3. Test, Measurement, and Diagnostic Equipment (TMDE). TMDE are non-MILSTRIP shipments, usually assigned project code 571. Normally TMDE shipments are consigned to the destination TO, with the Precision Measurement Equipment Laboratory (PMEL) as the ultimate consignee. Shippers will prepare a DD Form 1149 and each package should have the appropriate PMEL Shipping Label attached. The TO and PMEL will develop and publish local written processing procedures. For transportation funding, refer to the current fiscal year memorandum and logistics Tracker system website.

3.13.4. SOR Shipment and Receipt. The TO at installations with a SOR must coordinate with SOR personnel on local procedures to ensure proper documentation, movement, and receipt-handling instructions are available.

3.13.5. **(Added-LITTLEROCKAFB)** Engine Shipment Responsibilities

3.13.5.1. **(Added-LITTLEROCKAFB)** The 19 LRS Cargo Movement personnel will ensure all engine shipments/receipts comply with requirements outlined in T. O. 00-85-20 and AFI 24-203.

3.13.5.2. **(Added-LITTLEROCKAFB)** The Base engine manager will be notified at the earliest possible time of an engine shipment scheduled or actual arrival. The Base Engine manager or representative will ensure a timely inspection and pick-up of the engine. If damage is noticed prior to the off load of an engine, 19th LRS personnel will notify the base Engine manager of the damage prior to removal from the carrier's equipment.

3.13.5.3. **(Added-LITTLEROCKAFB)** Due to the limitations in loading and safety factors, engines will be shipped only IAW T.O. 00-85-20. All engines will be inspected prior to loading for required markings IAW T. O. 00-85-20, Para 4.2.4.

3.14. Personal Property shipments in the DTS. DTR, Part II, and Part IV, JFTR Vol 1, JTR Vol II, and AF supplement provide procedures, circumstances and conditions for moving household goods, unaccompanied baggage, and privately-owned-vehicles at U.S. Government expense. Controls similar to cargo apply when personal effects are moving in the DTS.

3.15. Cargo Inventories. TOs must inventory materiel awaiting movement to know what is on hand to prevent delays and protect against loss. The TO will use locally developed procedures to document all inventory and will act to rectify adverse inventory findings**.**

3.15.1. Inventory classified cargo, AA&E, classified and unclassified NWRM at the start of each working shift.

3.15.2. Inventory other special handling cargo each day.

3.15.3. Inventory daily, all 999/NMCS/MICAP/Agile Logistics/2LM/RPM/SOR cargo.

3.15.4. Inventory all materiel awaiting receipt or release to warehouse or Documented Cargo Operations at the end of the duty day.

Chapter 4

HAZARDOUS MATERIALS (HM)

4.1. Hazardous Materials Definition. For the purposes of this AFI, hazardous materials are substances or materials that the UN or DOT has determined are capable of posing an unreasonable risk to health, safety, and property during transportation.

4.2. General Requirements. Traffic Management personnel must comply with public law, policy, agreements, and applicable international, federal, and military directives when packaging, processing, handling, shipping, and receiving HM. Personnel who certify, prepare, handle, inspect and receive HM for shipment must be trained in the safe handling/processing of HM and ensure PPE is used. For hazardous cargo movement and certification use the appropriate AFMAN 24-204_IP, 49 CFR PARTS 100-199, IMDG, IATA or ICAO directive based on modal selection and final destination. Violations of these directives could result in civil and criminal penalties or undue safety risks to the general population. Hazardous substance shipments must comply with the same DOT and military regulations required for any other HM. Overseas shippers moving HM to, from, and within a foreign country must also comply with foreign country directives, applicable international requirements and DECA/SOFA. Shippers are also required to develop and maintain/update security plans as required. Personnel associated with packaging, transportation and receiving of hazardous materials must receive security training IAW DTR, PART II, Chapter 204.

4.2.1. Special Reporting Requirements. 49 CFR, paragraph 172.101, identifies hazardous substances and their reportable quantities. TOs must comply with special reporting requirements if there is a release of a reportable quantity of a hazardous substance. See 49 CFR, paragraphs 171.15. and 171.16.

4.3. Hazardous Materials Procedures. Follow the Federal, agency, or departmental documents regulating the mode of transportation. The Hazardous Materials Information Resource System (HMIRS) provides guidance to personnel responsible for the handling of hazardous materials. Use HMIRS as a complementary reference along with, and not as a replacement for, existing regulations. HMIRS is available on the internet at **http://www.dlis.dla.mil/hmirs**.

4.3.1. Labeling Hazardous Materials. Apply the proper hazard label to the outside of the shipping container according to AFMAN 24-204_IP, ICAO, IATA, IMDGand 49 CFR. AFOSH Standard 48-12, paragraph 5d, identifies the labeling required by the OSHA Hazard Communication Standard 29 CFR 1910.1200.4.

4.3.2. Shipper Certification. International, federal, and military regulations require the shipper to certify that hazardous materials are properly identified, described, packaged, marked, labeled, and in proper condition for transportation. **This includes hazardous material government purchase card micropurchase car shipments. .** Depending on the mode/ method or whether the shipment moves by commercial or by military transportation, the specific language may vary and specific forms may be prescribed. Shippers are reminded that when transporting hazardous waste, hazardous waste manifests are required as well as appropriate EPA generator and transporter identification numbers.

4.3.3. Preparing Aircraft/Vehicle/AGE Fuel Devices for Shipment. Drain and purge aircraft/vehicle/AGE fuel equipment IAW T.O. procedures prior to shipment. Items shall not be accepted (inducted) into supply or transportation without documented proof (AFTO Form 20, **Caution Tag**, or other locally produced documentation) certifying that the equipment has been properly drained and purged. Purging for transportation is only required if the applicable T.O. requires it, or items that are containerized and not accessible in flight with a flash point below 100 degrees per AFMAN 24-204_IP(**http://www.e-publishing.af.mil/shared/media/epubs/AFMAN24-204_IP.pdf**). Ensure the following conditions are met before offering aircraft/vehicle/AGE fuel devices for commercial and military transportation (air or surface):

4.3.3.1. Ensure strict compliance with Tech Order procedures for draining and purging the fuel parts. Remove all excess purging fluid as required and ensure the part is completely cleaned. Annotate on the documentation "drained and purged" or "drained and not purged." Include residue type (e.g. JP8) and volume remaining.

4.3.3.2. The AFTO Form 20 (or other documentation) must be signed (include printed full name) in the appropriate block or by the inspection stamp by personnel accomplishing the draining and purging procedures.

4.3.3.3. Cover plates will not be placed on openings until the documentation is completed. Then properly cap and seal drain openings, open lines and fittings as specified in the item Tech Order.

4.3.3.4. LRS/APS Materiel Management Flight and the TO must ensure documentation is attached to the item(s), checked for completeness and signed (certifying the item is drained and purged) prior to turn-in. If hazards are suspected, frustrate the shipment and coordinate with appropriate maintenance, vehicle or fuels personnel to resolve. Only qualified technicians on the equipment in question will perform the required procedures to prepare equipment for shipment.

4.3.3.5. If the T.O. data covering the parts/equipment does not require drain and/or purge procedures prior to shipping, then these parts do not require documented proof. This includes but is not limited to aircraft parts and aerospace ground equipment (AGE) containing hydraulic fluids, oils and lubricants (fluids non-hazardous for transportation). Certain aircraft parts received from Supply have fluid in them and are ready for installation on the aircraft. These fluids are essential for parts to operate.

4.3.3.6. Any item containing residual fluid (fuel) must be packed in a greaseproof, waterproof sealed bag (MIL-DTL-117). Use of a proper barrier bag will prevent contact of residual fuel with the outer container and reduce petroleum odors. If reusing packaging, inspect for presence of residue or stains. If the packaging is stained from a petroleum product, do not reuse.

4.3.3.7. Mark each outer container with the type of material and flash point for the purging fluid. This will help identify that odors are from non-regulated purging fluid and not from a hazardous material (flammable fuel).

4.4. Management of Hazardous Material Data. Packaging offices at each PRIME AFGLSC must complete transportation material safety data sheets for all Air Force hazardous items they manage. Assistance can be provided by contacting the Air Force Institute for Environment,

Safety and Occupational Health Risk Analysis (AFIERA), AFIERA/RSH, 2513 Kennedy Cir, Brooks City-Base, TX. 78235-5116, DSN 240-6159, FAX DSN 240-2315.

4.4.1. **Inert Certification.** IAW T.O. 11A-1-60, *General Instructions Inspection of Reusable Munitions Containers and Scrap Material Generated from Items Exposed to, or Containing Explosives*, inert certification will be done when required inspections are completed and items are free of hazardous or explosive contaminants. A certifying official will issue a certificate of clearance stating item(s) were 100% inspected and are inert and/or free of explosives related materials. Ensure inert certificate is provided for item(s) prior to offering for commercial and military transportation. A listing of T.O.s can be located by accessing the following url:

4.5. Hazardous Waste. Package hazardous waste in containers authorized in the applicable modal regulation (i.e., AFMAN 24-204_IP for military airlift, 49 CFR for domestic surface movement, etc.)**.** The Individual Generation Site (IGS) is primarily responsible for proper packaging, labeling, marking, and preparing the hazardous waste manifest. Describe hazardous waste material on the shipping papers by the proper shipping name identified in the HM table in 49 CFR, paragraph 172.101, or AFMAN 24-204_IP (**http://www.e-publishing.af.mil/shared/media/epubs/AFMAN24-204_IP.pdf**, Table A4.1(V **http://www.e-publishing.af.mil/shared/media/epubs/AFMAN24-204_IP.pdf**), preceded by the word "Waste." Hazardous waste shipments must:

4.5.1. Comply with HM rules. Refer to AFPAM 32-7043, *Hazardous Waste Management Guide*, paragraph 5.3.

4.5.2. The IGS must prepare a hazardous waste manifest IAW 40 CFR, Part 262, subpart B.

4.5.3. The IGS and the commercial carrier must both have EPA identification numbers assigned (may not apply to OCONUS locations), as specified in 40 CFR, part 262, subpart A.

4.5.4. The packaging activity must mark hazardous waste shipments as specified in 49 CFR, part 172, subpart E; 40 CFR, part 262, subpart C; MIL-STD-129; and 40 CFR, part 262, subpart C (for hazardous waste shipments to California, New Jersey, and Pennsylvania) and/or host nation requirements.

4.5.5. The IGS prepares a uniform Hazardous Waste Manifest on EPA Form 8700-22/22A or an applicable State Hazardous Waste Manifest for all hazardous waste shipments to be transported over public highways. The 40 CFR, part 262, *Uniform Hazardous Waste Manifest and Instructions*, gives detailed instructions for completing the form.

4.5.6. Defense Reutilization & Marketing Service (DRMSs) must maintain records on hazardous waste for which they have manifesting responsibility.

4.6. Radioactive Waste. Handle, document, ship, and dispose of radioactive/mixed waste in accordance with the appropriate modal directive listed in AFI 40-201 Managing Radioactive Materials in the US Air Force. Do not ship radioactive/mixed waste until it is cleared and has a control number issued by the Air Force Radioactive Recycling and Disposal Office (AFRRAD), 88ABW/CEVO, 1450 Littrell Road, WPAFB OH, 45433-5209, DSN 787-2010, Commercial (937) 257-2010. E-mail address **AFRRAD@wpafb.af.mil.**

4.6.1. The activity that generates the waste, with the installation radiation safety officer (RSO), initiates a written request for radioactive waste disposal instructions as specified on the AFRRAD website (**https://afkm.wpafb.af.mil/rad**).

4.6.2. The TO must comply with AFMAN 24-204_IP (**http://www.e-publishing.af.mil/shared/media/epubs/AFMAN24-204_IP.pdf**) and 49 CFR when transporting radioactive waste.

4.7. Radioactive Commodities. TOs will package and ship radioactive commodities in compliance with AFJI 23-504, *Radioactive Commodities in the DOD Supply System*. All commodities must be properly packaged, marked, labeled, and certified before being offered to a carrier.

4.8. Reshipment/Transshipment Procedures. HM, that has been previously packaged and certified, must be thoroughly checked, and recertified as required, when originating as a new shipment or changing to a different mode/method at a transship location. If there is any indication that the HM package does not fully comply with federal, military or international packaging/certification requirements, then frustrate the shipment and take action to ensure the required compliance standards are met.

4.9. Secure Holding Areas (Formerly Safe Haven). See Chapter 5, Paragraph 5.14.

4.10. Personnel Qualifications. Personnel who certify, prepare, handle, or inspect HM for shipment within the DTS must receive initial and subsequent refresher HM training according to DTR, Part II, AFMAN 24-204_IP and/or host nation requirements. The Commanding Officer or designated representative of units involved with the hazardous material process must ensure that:

4.10.1. All personnel are appointed in writing to include scope of authority.

4.10.2. All personnel successfully complete required training.

4.10.3. Personnel certifying HM for military airlift successfully complete training according to AFMAN 24-204_IP.

4.10.4. Personnel, other than certifiers, who handle or load HM must successfully complete training according to 49 CFR, paragraph 172.704 and AFMAN 24-204_IP, Chapter 1, Paragraph 1.3.

4.11. DOT Special Permits (formerly Exemptions). The Hazardous Materials Safety and Security Reauthorization Act of 2005 amended the Federal hazardous materials transportation law by changing the term "exemption' to "special permit." DOT special permits waive 49 CFR requirements on the basis of equivalent levels of safety. DOT special permits for packaging are valid for domestic transportation of hazardous materials. They are not valid for international shipments of hazardous materials covered by United Nations Performance Oriented Packaging requirements. HQ SDDC will obtain DOT special permits for DOD at the request of the HAZMAT service focal point. Special permits issued by DOT are for a specific period of time. See 49 CFR, paragraph 107.109, Application for Renewal. DOT special permit web site is located at: **http://hazmat.dot.gov/sp_app/approvals/exsys.htm**

4.11.1. The DTR requires a quarterly submission of Report Control System (SDDC-158), DOT Special Permits and Competent Authority Approvals (CAA) usage report. TOs are responsible for tracking use of DOT special permits and CAAs for their activity and

submitting usage data to their MAJCOMs for consolidation. Activity reports are due to the MAJCOMs the first week of the following month after the end of each quarter.

4.11.2. MAJCOMs must prepare a consolidated quarterly report and submit it to 401 SCMS/GUMAA, 4375 Chidlaw Rd, Wright-Patterson AFB OH 45433-5540. The 401 SCMS/GUMAA will reconcile report and forward to HQ SDDC. MAJCOM consolidated reports are due to 401 SCMS/GUMAA not later than the 15th of the following month after the end of each quarter. Report will be forwarded to HQ SDDC two weeks after receipt of usage reports from the MAJCOMs.

4.12. Competent Authority Approvals (CAA), Certifications of Equivalency (COE) and Hazard Classifications. Specific requirements for packaging CAAs, COEs, and hazard classifications are contained in AFI 24-210_IP, *Packaging of Hazardous Material,* AFMAN 24-204_IP and the DTR, Part II, Chapter 204.

4.13. Documentation Retention. Per 49 CFR, paragraph 172.202, shipping documents (i.e., BOL, manifest) for Hazardous Waste shipments must be retained for 3 years after the material is accepted by the initial carrier. For all other hazardous materials, shipping documents must be retained for 2 years after the material is accepted by the initial carrier.

4.14. Receiving Hazardous Material. All hazardous material will be off-loaded and placed in an authorized transitory holding area separately identified and segregated from other materiel processing areas. The transitory holding area will have the approval of local Health, Safety, and Fire Hazards Coordinating Group or comparable base authorities. Incompatible HM will not be stored in the same location. A period not to exceed two work days is considered the maximum time for hazardous items to remain in transitory holding areas in central receiving. When materiel cannot be completely processed within this time period it should be moved to the Hazardous Storage facility until processing is completed.

Chapter 5

CLASSIFIED, PROTECTED, SENSITIVE AND CONTROLLED CRYPTOGRAPHIC CARGO,ARMS, AMMUNITION, AND EXPLOSIVES (AA&E), CLASSIFIED AND UNCLASSIFIED NUCLEAR WEAPONS RELATED MATERIEL (NWRM)

5.1. Need for Special Procedures. Special procedures are necessary to prevent loss and damage to classified and protected cargo during transportation. As a minimum, TOs must comply with procedures described in this chapter and the standards prescribed in the DTR, Part II, DOD 5200.1-R, *Information Security Program*; AFI 31-401, *Information Security Program Management*; DOD 5220.22-R/AFI 31-601, *Industrial Security Program Management*; DOD 4525.8-M/AF Supplement 1, *DOD Official Mail Manual*; DOD 5105.38-M, *Security Assistance Management Manual*; AFJAM 23-215, *Reporting of Supply Discrepancies*; AFI 33-201V5, *Controlled Cryptographic Items (CCI)*; AFI 20-110, Nuclear Weapons-Related Materiel Management and MIL-STD-l29, *Standard Practice for Military Marking*. All classified and unclassified NWRM will be handled and shipped as classified, protected cargo. The TO will ensure complete documentation is processed and completed as follows:

5.1.1. Ensure each DD Form 1348-1A issued for the shipment of classified, sensitive, and some controlled items shows the word "CLASSIFIED" or "SENSITIVE" followed by the applicable supply controlled item code. The DD Form 1348-1A will be accompanied by a printed serial number listing when items exceed printable numbers on the form itself. NWRM DD Form 1348-1A will be stamped with the statement “Classified NWRM Item” or “Unclassified NWRM Item” in red ink. The DD Form 1348-1A, Issue/Receipt Document is the only shipment document authorized for shipping NWRM. NOTE: The DD Form 1149 is authorized when necessary to meet Department of Energy (DOE) requirements. The document will be stamped as above.

5.1.2. Use extra copies of the DD Form 1348-1A as a hand receipt in processing SECRET and SENSITIVE shipments prior to packaging. The DD Form 1149 serves as a hand receipt for non-MILSTRIP shipments.

5.1.3. Provide hand-to-hand receipt control for NWRM, classified, sensitive, and controlled shipments. The DD Form 1907, *Signature and Tally Record*, may be used for all receipt transactions. The TO may use the DD Form 1907 as a hand-to-hand receipt for internal control of classified or sensitive items. Equivalent carrier-furnished forms may be used as described in the DTR, Part II. The air/truck manifest may be used for military shipments if they adequately control the materiel being transferred. DD Form 1907 or carrier-furnished forms are not required for all movements via Domestic Express Small Package Service (DESPS) to include NWRM. Hand receipt documents will be retained in customer support, and disposition will be in accordance with AFRIMS (**https://afrims.amc.af.mil**/).

5.1.3.1. If Asset Management (AM) is not used, the DD Form 1348-1A is used as the hand receipt document for processing sensitive items between receiving and storage. An extra set of forms is produced for each sensitive item and the unused copies are placed in the number 1 shipping container for use by the receiving function. A signature block is provided.

5.1.4. Shipments of classified material to the FMS purchaser are normally handled through DTS. However, if the FMS freight forwarder or a country-arranged pilot or vessel pick-up at the POE is indicated, obtain a copy of the country's Transportation Plan detailing the approved method of transportation. The Transportation Plan can be obtained from the Air Force Security Assistance Center (AFSAC) Command Country Manager, Wright-Patterson AFB, OH.

5.1.5. Shipments to/from OCONUS locations will use AMC or USTRANSCOM DCD routing options for classified secret or confidential, sensitive, classified/unclassified NWRM and controlled shipments. The U.S. Postal Service will not be used to move any NWRM shipments. Reference DTR 4500.9-R, Part II, chapter 205.

5.1.6. Classified SECRET, CONFIDENTIAL, CCI, AA&E, classified and unclassified NWRM shipments will be afforded the Transportation Protective Service (TPS) as depicted in DTR 4500.9-R, Part II, Chapter 205, **http://www.transcom.mil/j5/pt/dtrpart2/dtr_part_ii_205.pdf**. The U.S. Postal Service will not be used to move any NWRM shipments.

5.1.7. The AF Form 4387, Outbound Transportation Protective Service Materiel Worksheet, provides a worksheet for processing outbound TPS shipments. TOs must use this worksheet to process TPS materiel for movement. The packaging certifier must validate Section I tasks prior to shipment planning. The movement documentation certifier must validate Section II tasks prior to shipment release. Certifications will be accomplished by a 7-level, 2T0/2T2 technical sergeant or above, or civilian equivalent (based on the unit manning document). Waiver authority for a certified, 5-level staff sergeant or civilian equivalent will be at the LRS/APS commander level. The individual performing the tasks and the certifiers cannot be the same person. NOTE: AMC aerial ports are not required to generate the AF Form 4387 to document movement of cargo on AMC channel missions. This does not relieve origin TOs of their responsibility to accomplish the tasks required by policy for cargo routed via AMC channel missions.

5.1.8. TOs will use the AF Form 4388, Inbound Transportation Protective Service Materiel Checklist, when receiving TPS shipments. The checklist must be accomplished in conjunction with in-checking process. It is not the intent to accomplish the form after the fact.

5.1.8.1. All classified and unclassified NWRM assets will be in-checked immediately upon receipt and inspected to ensure seals are intact and there is no evidence of damage or tampering with the container. TOs will ensure markings match information on the movement documents. Only personnel appointed and certified IAW paragraph 1.5.4., shall process and in-check NWRM assets.

5.1.8.2. If no discrepancies are detected, receiving personnel will legibly print name and sign (block letters: Last, FI, MI, Phone, and Organization) date and complete the AF Form 4388.

5.1.8.3. The receiver must acknowledge within 2 hours (CONUS) and 8 hours (OCONUS) of in-checking a receipt of NWRM. Receiving personnel will use official e-mail/fax to notify the consignor and the NWRM Transaction Control Center (NTCC), or the Air Force Space Command Logistics Support Center (AFSPC LSC) that the shipment has been received. The e-mail must include the TCN, NSN, part number, document

number, quantity, unit of issue and applicable serial number(s). NWRM receipts will be processed using the following procedures. The AFGLSC NTCC can be contacted at DSN 312-576-4633 (COMM 618-256-4633) 24 hours a day, 7 days a week or at **635scow.ntcc@scott.af.mil.**

5.1.8.3.1. NTCC or the AFSPC LSC and LRS will perform the appropriate research to determine if valid requirements exist for those NWRM not shipped by normal MILSTRIP procedures. Utilize standard requisition procedures prior to receipt processing actions.

5.1.8.3.2. NTCC or the AFSPC LSC will lift freeze code "N", and notify the requesting Receiving Section that the freeze code has been removed.

5.1.8.3.3. Receiving will process the REC. After processing, contact NTCC or the AFSPC LSC to reload the freeze code "N".

5.1.8.4. Shipping agency will acknowledge receipt of receipt notification, clear suspense file, and maintain all REPSHIP documents, DD Form 1348-1s and AF Form 4388s with the bill of lading or manifest pickup report for 10 years.

5.1.8.5. If discrepancies are detected or the shipment is not received by the RDD, a TDR will immediately be initiated by the receiving activity.

5.1.8.6. If the shipping agency does not receive confirmation of receipt by the RDD the shipping activity will initiate immediate tracer actions and notify the shipping NWRMAO or MASO.

5.1.9. DELETED

5.1.9.1. DELETED

5.2. Description of Classified Material on a BOL. The TO protects NWRM classified and protected cargo shipments from compromise and conceals the exact nature of materiel classified SECRET or CONFIDENTIAL and classified/unclassified NWRM. The BOL description used by the TO should accurately identify the shipment without disclosing the exact nature of the material. It should give the same freight rate for the assessment of freight charges as the actual material shipped.

5.2.1. Never show security classification on copies of BOLs or documents attached to shipments.

5.2.2. The TO provides a description to use on BOLs sent to a contractor for completion.

5.3. Controlled Inventory Item Codes (CIIC)/Physical Security Codes (PSC). The CIIC or PSC is found in Block 9 of the DD Form 1348-1A. The DTR, Part II, Chapter 205, Table 205-7, provides the CIIC/Security Risk Code (SRC) and the degree of protection risk categories that are associated with that code. The table can be found at this link (page II-205-55): **http://www.transcom.mil/j5/pt/dtrpart2/dtr_part_ii_205.pdf**.

5.3.1. Risk category codes (e.g., Sensitivity Code, Security Code) use the item stock number and the FEDeral LOGistics (FED LOG) Data on Compact Disc. FED LOG is maintained by DLA, Battle Creek MI 49017-3084, DSN: 932-4725.

5.3.2. Further guidance for moving SECRET or CONFIDENTIAL material by mail is in DOD5200.1R/AFI 31-401. DOD 4525.8-M/AF Supplement 1 restricts shipments to a packaged weight of 70 pounds or less and 108 inches in length and girth combined. USPS can also be used for shipments of small quantities (15 or less) of CAT II through IV small arms and Air Force M-16 weapons for CONUS movements. Registered Mail/Return Receipt Requested is required. Note: AMC Airlift or USTRANSCOM DCD is the only method to ship all NWRM, classified Secret or Confidential, sensitive, and controlled material to and from OCONUS. Do not use the USPS method to move AA&E, classified, protected, sensitive and controlled cryptographic cargo, or classified/unclassified NWRM shipments to an AMC APOE for onward channel airlift.

5.4. Classified and Protected Cargo Movement Codes (Transportation Level of Protection). TPS codes and minimum protection service for sensitive and classified shipments are listed in DTR 4500.9-R, Part II. Signature and Tally Record Service (ST) is designed to provide continuous tracking of shipments from origin to destination. It is considered a tracing service, not a protective service when used independently. The DD Form 1907 or equivalent carrier-furnished signature and tally record is acceptable. For additional information refer to DTR, Parts II and III. For Minimum TPS for all NWRM, Sensitive AA&E and Classified Shipments see DTR Part II, Chapter 205 for further guidance.

Note: Always reference modal tables in DTR Chapter 205 when moving AA&E.

5.5. Movement and Handling Requirements. TOs comply with the following requirements:

5.5.1. Obtain in writing individuals authorized to sign for all NWRM and protected material within their organizations (See Chapter 1 for further guidance).

5.5.2. Ship weapons and same caliber ammunition in separate containers. During contingency, deployment, or military operation other than war (MOOTW), weapons and same caliber ammunition can be moved on the same pallet as long as they are packaged in separate containers.

5.5.3. Certify to the highest degree of TPS when more than one classification or security risk category shipments are consolidated on a mobility pallet.

5.5.4. Ship missile rounds separately from launch and control equipment.

5.5.5. Provide the same protection for firearms and ammunition scheduled for demilitarization and retrograde, as other shipments of AA&E.

5.5.6. Process export shipments through military managed and operated air or ocean terminals.

5.5.7. Store sensitive and controlled (NWRM, classified, pilferable, and AA&E) items in an approved security cage when transportation or movement delays are experienced. All NWRM storage facilities, cages, containers, rooms, etc, will have a key and lock program IAW AFI 31-101 and AFI 31-401 and approved GSA security vaults for classified/NWRM/AA&E shipments.

5.5.7.1. Do not leave classified materiel unattended except when secured in the classified storage area. All discrepancies (gains or losses) will constitute a potential compromise of classified information. Immediately secure the material, report all discrepancies to the security manager and begin research efforts (e.g. tracer action and shipping discrepancy

report, report of survey investigation, etc.). Classified items will not remain on the receiving line for any reason.

5.5.8. Select commercial carriers that provide single line-haul service from point of origin to destination when routing sensitive shipments. Trailer interchange service is acceptable providing the interchange carrier also provides the required service. AMC Airlift or USTRANSCOM DCD are the only method to ship all NWRM, classified Secret or Confidential, sensitive, and controlled material to and from OCONUS.

5.5.9. If deploying and traveling commercially refer to DTR Part III, *DOD Foreign Clearance Guide*, and COCOM reporting instructions for weapons and ammunition movement guidance.

5.5.10. Before releasing a shipment requiring TPS, ensure the driver possesses a valid operator's. license, medical examiner's certificate, employee record card or similar document with the driver's photograph. The TO must be able to verify a driver's affiliation with the TSP named on the BL. DD FORM 626, Motor Vehicle Inspection (Transporting Hazardous Materiel), is required for all shipments moving under SNS (see DTR, Part II).

5.6. Packaging Classified/NWRM Material:

5.6.1. If the classified material is an internal component of a packageable item of equipment, the outside shell or body may be considered as the inner enclosure provided it does not reveal classified information.

5.6.2. If the classified material is an inaccessible internal component of a bulky item of equipment, the outside or body of the item may be considered to be a sufficient enclosure provided observation of it does not reveal classified information.

5.6.3. If the classified material is an item or equipment that is not reasonably packageable and the shell or body is classified, it shall be concealed with an opaque covering that will hide all classified features.

5.6.4. Shipping and storage containers, including closed cargo transporters such as dromedaries, may be considered the outer wrapping or cover when used and are compliant with the double containment requirement of safeguarding classified materiel.

5.6.5. Controlled and protected cargo (controlled, sensitive, classified, pilferable**,** and any NWRM) materiel shall be prepared for shipment, packaged and sealed in ways that minimize risk of accidental exposure or undetected deliberate compromise. Put shipping documents in inner-most shipping container and obliterate all markings not applicable to the shipment on outside of shipping container (Container NSN, United Nations Performance Oriented Packaging (POP) markings and orientation/special handling markings and/or labels applicable to the shipment will remain on NWRM shipments). The container shall not bear any classification markings or other unusual marks that might invite special attention to the fact that the contents are classified or protected cargo. **Note: shippers must apply all HAZMAT related markings and labels to controlled, protected cargo and NWRM HAZMAT shipments**. Additional guidance can be found in DTR chapter 205 and DOD 5200.1-R. Mark and label IAW MIL-STD-129, which can be found at **http://www.dscc.dla.mil/offices/packaging/specstdslist.html#STDs**. Personnel packaging and verifying controlled and protected cargo certify that items are properly classified,

described, packaged, marked and labeled, and in proper condition for movement according to applicable regulations. Use AF Form 4387 for certification. Packers and certifiers include Technical Specialists, shipment originators and items packaged prior to delivery to the TO for movement. Units and/or technical experts packaging AA&E, classified, any NWRM and sensitive items shipments for movement, will initiate and complete Part I. Packaging/Preparation of AF Form 4387, *Outbound Transportation Protective Service Materiel Worksheet*. Units will ensure technical experts sign Part I "Packed By" and at least a 7-level technical expert will sign "Certified By" of the AF form, validating the item is packed correctly in accordance with applicable regulations and technical orders and the accompanying documentation accurately reflects the contents.

5.6.5.1. Do not mark exterior containers to indicate the security classification or TPS required. However, when a shipment goes by military airlift, DD Form 1387-2, Special Handling Data/Certification, must show the TPS required in Block 6. See DTR, PART II, Chapter 205, for 1387-2 preparation and distribution. Do not include item description (nomenclature) or any information that indicate the nature of the contents on the exterior of protected cargo. When shipping material that is both classified and hazardous, the shipper prepares and distributes a Shipper's Declaration for Dangerous Goods, (DTR, Chapter 204). Logistics Readiness Squadron functions will ensure the removal, replacement, and necessary destruction or obliteration of authorized tags and labels (i.e. 999, NMCS, 777, etc) is accomplished while in-checking or shipping property unless required by directives to be retained (i.e. aircraft engines, ammunition, and hazardous material). All markings on shipping containers not applicable to the shipment will be obliterated unless otherwise required by directives.

5.6.5.2. For controlled, sensitive, classified, any NWRM and pilferable items (except for FMS shipments), all shipping documentation shall be placed inside all containers rather than on the outside. Do not include copies of the MSDS either in or on the shipment.

5.6.5.3. NWRM shipments will not be consolidated.

5.7. Special Instructions for Small Arms and Other Weapons. Small arms and other weapons and firearms consist of:

5.7.1. Handguns

5.7.2. Shoulder-fired weapons

5.7.3. Light automatic weapons (up to and including .50 caliber machine guns)

5.7.4. Recoilless rifles (up to and including 106 mm)

5.7.5. Mortars (up to and including 81 mm)

5.7.6. Rocket launchers (human portable)

5.7.7. Grenade launchers (rifle and shoulder-fired)

5.7.8. Mounted or airborne weapons (up to and including 90 mm)

5.7.9. Human operated weapons that have potential use in civil disturbances and are vulnerable to theft.

5.7.10. Procurements of New Small Arms and Other Weapons. Organizational users will contact 406 SCMS/GUMA (AFGLSC), Robins AFB GA, DSN 468-2771, to identify necessary packaging issues.

5.7.11. Repackaging Small Arms After Inspection, Exercise and Storage. Qualified packaging personnel will do the packaging. They must repackage weapons opened for exercises, or other reasons, within ten days of the exercises. Contact 406 SCMS/GUMA, Robins AFB GA, DSN 468-2771 for requests on packaging waiver authority to deviate (follow paragraph 9.6.12. for additional guidance). Do not store packaging materials in the weapons storage area.

5.7.12. Identification Markings for Small Arms. Mark each individual unit package, the intermediate and exterior containers IAW MIL-STD-129, paragraph 4.4.3.14. Do not attach packaging lists or other documents identifying the contents to the exterior container. Print the serial numbers for firearms shipments onto the DD Form 1348-1A or on a separate list or memorandum. The list or memorandum must show the requisition number and item stock number. If inappropriate markings are already applied, obliterate them.

5.7.13. Do not apply these controls to items reduced to scrap or to parts and pieces that do not constitute complete firearms.

5.7.14. Receiving Firearms. Check each container for item identification, condition, quantity, and verification of serial numbers. (For shipments from Warner Robins ALC, notify Warner Robins ALC/DSMA). The local security office will be notified of firearms discrepancies. These actions do not preclude the submission of SF 364 or DD Form 361, as appropriate.

5.8. Explosives. AFMAN 91-201, *Explosives Safety Standards*, provides guidance on hazard classification, firefighting, handling, transportation, storage, and compatibility of explosives. Use only approved locations to store ammunition and explosives while in the DTS.

5.9. Escort Criteria of AA&E for Carrier Load/Off-Load and Base Surface Movements. On-base escort of AA&E and classified material will be established and approved by the Installation Security Council. Origin and destination TOs and transship/in transit locations must be knowledgeable of their local Installation Security Plan for movement to/from the processing or storage areas; to/from the carrier's equipment; and to/from the surface and aircraft load/off load locations. Escort selection should encompass consideration of who is best qualified to take action in case of emergencies and the training expertise needed when considering various levels of protective services. When using military ground transportation for movement off base to field locations, deployments, etc., refer to AFI 31-101, *The Air Force Installation Security Program*, or contact the Security Forces office for procedures.

5.10. Advance Shipment Planning. The TO will conduct positive advance shipment planning that includes liaison with the POCs representing the consignor (shipper's material prep-for-transport office), the consignee (material receipt personnel and TO), and the TSP's dispatcher to ensure the safe, secure, and cost effective transport of AA&E, and classified SECRET, CONFIDENTIAL, CCI and NWRM materials. (See DTR 4500.9-R, Part II, Chapter 205)

5.10.1. For any NWRM shipments, the TO shall notify the Consignee in advance of the shipment and the Consignee shall acknowledge the ability to receive shipment**.** The TO shall await positive acknowledgement from the recipient before the shipment occurs.

5.11. Report of Shipment (REPSHIP) Process.

5.11.1. The origin shipping office must send a REPSHIP (manual or automated) to the ultimate destination (and to the POE for OCONUS DTS shipments) for all categories of materiel requiring TPS IAW the DTR, Part II, Chapter 205. This includes shipments made using TPS carriers as well as when registered mail is the method of transportation for classified material. Automated REPSHIP process will be used where possible. For origins and destinations without an automated REPSHIP capability, FAX or email processes will be exercised. Note: Instructions for implementing the automated REPSHIP are available on CMOS Training folder at **https://www.gunter.af.mil/il/ilr/ilrc/documents.aspx.**

5.11.2. All Air Force shipping/receiving activities will establish and maintain REPSHIP suspense lists to ensure timely receipt of material. Receiving activities will issue a TDR when REPSHIPs are not received prior to receipt of shipment. Origin shipping activity will issue a TDR when an Air Force receiving activity does not acknowledge receipt of the REPSHIP within 24 hours.

5.11.2.1. For any transportation discrepancy noted on shipments of AA&E, classified materiel, sensitive/protected materiel, and either classified or unclassified NWRM it shall be reported immediately to AF/A4LM,AFGLSC 401 SCMS/GUMAA and respective MAJCOM. Copies of the TDR and supporting documentation shall be forwarded to all offices. The 401 SCMS/GUMAA will track the status of the TDR until corrective action is taken or if damage/loss has occurred through final restitution of any monetary claim paid to DFAS. Additionally, damage or loss of any Air Force assets in transit where the claim is equal to or exceeds $20,000 will be subject to the same provisions of this paragraph. 401 SCMS/GUMAA will gather historical metrics to identify trends and recommend corrective actions through AF/A4LM. Also see chapter 10 for further TDR guidance.

5.11.3. For all Satellite Monitoring Service (SNS) shipments between CONUS origins and destinations, shippers must use the DTTS website to transmit a REPSHIP to the final destination. To do this, shipping activities must first obtain an IRRIS account and system access. (Visit the IRRIS website **https://www.irris.tea.army.mil**/ to get an account). Shipping activities may also register for the REPSHIP Alert function, as this capability is not automatic when gaining an IRRIS account.

5.11.3.1. When SNS shipment REPSHIPs are made through DTTS, the shipper must verify the shipment information is resident in DTTS and a REPSHIP was transmitted. Access the IRRIS website's BOL screen within 20 minutes after releasing the shipment (from your shipper system) to confirm. You must release the shipment prior to carrier transmitting their departure message to DTTS. If the shipment data is not resident, go to the "Add Shipment" feature and enter the shipment information. This will manually generate the automated REPSHIP from DTTS.

5.11.3.2. Activities receiving SNS shipments must confirm receipt of the shipment (using IRRIS website) within 2 hours of delivery. Shipping and receiving offices must contact DTTS office at 1-800-826-0794 (24-hour operation) and forward required information if the DTTS website is inaccessible for any reason.

5.11.4. Shippers executing a REPSHIP for other than SNS shipments must utilize an automated means (e.g., e-mail or FAX) to transmit the REPSHIP to final destination for all

modes of transportation. A REPSHIP is not required if an automated advanced shipment notice capability exists. For automated advanced shipment notices, if there is no automated receipt acknowledgement within 2 business hours, origin will fax a paper REPSHIP or email to the destination and follow up with a confirming call to validate receipt. CONUS REPSHIP notifications/advanced shipment notices will be made within 2 hours of shipment departure. OCONUS notifications will be made within 8 hours of shipment departure.

5.11.5. Air Force destination receiving TO/approved contractor must acknowledge receipt of shipment within 24 hours of receipt (for SNS shipments, see 5.11.3.2). The destination must immediately inform their security officer and the origin shipping office if the shipment is not received by the REPSHIP ETA date and the responsible carrier cannot provide shipment accountability, acceptable explanation for delay and new ETA. Specific shipment status will be provided and, if applicable, include proof that the shipment is under carrier's control in their system, an acceptable reason for the carrier's delay and their new ETA. The origin shipping office will immediately inform their security officer and initiate tracer action when notified shipment is overdue at destination.

5.11.6. NWRM (classified and unclassified) REPSHIP Procedures.

5.11.6.1. All NWRM shipments and receipts will have 100 percent REPSHIP notification and confirmation regardless of the shipments classification and protective service provided.

5.11.6.2. In addition to REPSHIPs, all NWRM shipments require official e-mail (NIPRNET) sent by the origin shipper to the destination receiving unit to ensure all parties are fully aware of the shipment. For NWRM shipments originating in CONUS to OCONUS, include submission of the REPSHIP to the responsible APOE Customer Service Branch (CSB) office. For NWRM shipments originating in OCONUS, include submission of the REPSHIP to the servicing Air Terminal Operations Center (ATOC). The notification will be made within 2 hours (CONUS) and 8 hours (OCONUS) of releasing an outbound shipment. Send the e-mail to: NWRM Transaction Control Center (NTCC) at **635scow.ntcc@scott.af.mil** and organizational email accounts of the origin and destination Nuclear Weapons-Related Materiel Accountable Officer (NWRMAO)/Munitions Accountable Systems Officer (MASO) or contractor receiving activity, as appropriate. The e-mail should contain movement document/AWB number and shipment TCN(s).

5.11.7. REPSHIP communications should remain unclassified unless they contain classified information.

5.11.8. Disposition for shipping and supporting documentation (including REPSHIPS) for all TPS, NWRM and FMS shipments will be 10 years IAW AFRIMS, Table & Rule T24-01 R03.00.

5.12. Pilferable Cargo Protection. Origin and destination TOs identify those shipments deemed to be pilferable and hold these shipments in a secure area such as a security cage while in transportation's possession. Report any suspected pilferage to the base security force authorities and consignor. Assist investigative personnel to include tracing the shipment from origin to point of pilferage detection.

5.13. Movement of Classified, Protected and all NWRM Shipments via Blanket Purchase Agreement (BPA) DOD Domestic Express Small Package Service (DESPS) Carriers. Some shipments may be moved within CONUS and to/from Alaska, Hawaii, and Puerto Rico via an authorized carrier if eligible. For specific guidance see DTR, Part II, Chapter 205. Prior to using a DESPS carrier for classified, protected and any NWRM shipments TOs must confirm the initial or continued use of a carrier for movement of DOD classified material. Authorized carriers can be found at website: **https://private.amc.af.mil/A4/domexpress/spsindex.html**. Compliance with the restrictions and processes in the following paragraphs is mandatory to preclude any security violations caused by improper handling of classified shipments.

5.13.1. Origin TOs:

5.13.1.1. WILL NOT USE THIS MODE/METHOD TO MOVE CLASSIFIED SHIPMENTS OR ANY (classified/unclassified) NWRM SHIPMENTS TO THE AMC APOE FOR CHANNEL AIRLIFT.

5.13.1.2. Must comply with the provisions of DOD 5200.1-R and AFI 31-401, *Information Security Program Management*.

5.13.1.3. Must process all classified freight shipments for the base unless the TO establishes other arrangements.

5.13.1.4. Must use only NEXT DAY carrier service under these procedures, providing the provisions meet this policy.

5.13.1.5. Must give the shipment to the DESPS carrier only when there is assurance of next day delivery service and consignee receipt. Do not document on outside container or advise the carrier, by any means, that the shipment is classified.

5.13.1.6. Must ensure the package wrapping, marking, and addressing are in compliance with directives, if packed by TO personnel, otherwise the shipper is responsible for the integrity of the shipment. The carrier's package may be used as the outer wrapper. Classification markings, packing list, and classified document receipt will be located on the inner container.

5.13.1.7. Will not ship classified to, from or between DOD contractors, unless it has been verified that the contractor has the required Defense Security Service approval in accordance with DOD 5200.1-R. See DTR Part II, Chapter 205.

5.13.1.8. The air waybill, either electronic or hard copy, must require the carrier to provide a delivery signature. Track shipment status using the carrier web-based system to include selection of e-mail notification of any shipment exceptions (i.e. weather delay, missed truck at sort facility, missed delivery date, etc.) experienced by the carrier in route and initiate the automated proof of delivery capability.

5.13.1.9. Must send a REPSHIP. See Paragraph 5.11.

5.13.1.10. Must confirm delivery of classified shipments processed through their office within two working days after carrier pickup. Confirmation must be made through both the REPSHIP process (i.e. direct contact with addressee) and the carrier's electronic signature service, or the carrier's automated system or tracking software program and file signature verification document. Print out and retain confirmation receipt information from the carrier's system for record.

5.13.2. Destination TOs:

5.13.2.1. Must handle all DESPS/BPA carrier deliveries to final customer as classified shipments until it is verified that the shipment is unclassified.

5.13.2.2. May turn over classified shipments to consignee without additional documentation, aside from that normally used as long as the individual accepting the shipment is authorized to receipt for classified shipments in accordance with the provisions of subparagraph 5.13.3.2.

5.13.3. Origin and Destination TOs:

5.13.3.1. Must develop locally written procedures with information management and other base customers, and security personnel covering the preparation, handling, receipt, documentation, and delivery of classified shipments moving via the DESPS/BPA carrier.

5.13.3.2. Must ensure only designated and cleared personnel are authorized to receipt and/or process DESPS/BPA carrier deliveries.

5.13.3.3. Immediately report any problem encountered in the movement of classified, protected and NWRM materiel by the DESPS/BPA carrier(s) to their MAJCOM, and the Agency Contracting Officer's Representative (ACOR) at HQ USAF/A4LM.

5.14. Secure Holding Areas (Formerly Safe Haven, Refuge and Secure Holding Areas). Air Force installations capable of providing holding area will do so to assure positive security control over movement of DOD munitions and other sensitive cargo. Holding area safety and security procedures are detailed in the DTR, Part II. For Nuclear secure holding area requirements, refer to DOD C-5210.41-M, Air Force Supplement, *Nuclear Weapon Security Manual*.

5.14.1. TOs are responsible for ensuring their Installation Commander, in coordination with the other installation supporting functions, are aware of the responsibilities set forth in this instruction. Installation Commanders should ensure transportation, security forces, disaster preparedness, civil engineer, medical, munitions, environmental and safety personnel work closely together to develop and implement their local policy in support of this DOD requirement. See DTR, Part II, Chapter 205 and AFI 31-101.

5.14.2. TOs will update their installation holding area capabilities through the TFG webpage so inbound and enroute shippers/carriers can successfully plan munitions and sensitive cargo movements. For procedures on when and how to update the TFG, see instructions in DTR, Part II. User ID and password are required to access the TFG. TOs may view the list of secure holding sites from the TFG web page.

5.14.3. The TO will contact the destination activity to confirm they have the ability and intent to receive and secure SRC I and II shipments. To prevent non-emergency in transit temporary parking needs, the origin TO must schedule shipments to arrive at the destination within normal receiving hours, making every effort to avoid the layover of shipments during weekends, holidays, and non-receiving hours.

5.15. Defense Transportation Tracking System (DTTS). Air Force shippers must monitor in transit status of their inbound and outbound AA&E and classified shipments in DTTS. To facilitate this action they will establish both TO and worker accounts to access the DTTS web-site. Tracking assist in facilitating any afterhours receipt requirements through positioning data available in DTTS. It is highly suggested TOs utilize the GEO Fencing and automated alert

capabilities in DTTS to mitigate after hours delivery requirements. New DTTS account requests must be coordinated with AF/A4LM. DTTS will not establish new accounts without AF/A4LM validation.

5.15.1. Destination TO will utilize the DTTS web site to confirm receipt for all SNS shipments (For further guidance see 5.11.3). Shippers are able to electronically verify receipt, and DTTS automatically transmits a receipt verification message to the origin TO account.

5.15.2. Origin shipping TO will verify the operational status of the DTTS monitoring system prior to loading TPS shipments. Confirm DTTS is enabled through visual examination of the DTTS message display. Record the status of the DTTS system check on page 1 of DD Form 626, Item 14 A. DTTS monitoring system found to be defective must be corrected prior to loading. The CMOS movement document must be released immediately upon conveyance departure from the installation to ensure required data is residence in DTTS.

5.15.3. DTTS Trailer Tracking Service (TTS). Only those carriers offering trailer tracking will be used for shipments requiring this TPS. This TPS will be identified in shipper systems by the letters DCS and accompanied by the clear text explanation (Trailer Tracking Service). TO personnel will verify TTS sensor components are affixed to the trailer and doors. Trailers spotted for loading that are missing TTS sensor components will be rejected. Carrier non-compliance with this service will be documented and reported IAW DTR Part II, Chapter 207, Carrier Performance. For further guidance, shippers should reference DTR, Part II, Chapter 205.

5.16. Emergency Hot Lines. Use the following SDDC and DTTS emergency hot line numbers to obtain any type of DOD safety or security advice and assistance.

5.16.1. Defense Transportation Tracking System (DTTS) Commercial: 800 826-0794

5.16.2. SDDC Operations Center

Commercial: 757 878-7555/8141
DSN: 826-7555/8141

5.16.3. SDDC Assistance HOTLINE (Secure holding area)

Commercial: 800 524-0331

5.16.4. DOD Hazard Class 1 (Explosives) only

Army Operations Center: Commercial: 703 697-0218/0219 (COLLECT)
DSN: 227-0218
Ask for "WATCH OFFICER"

5.16.5. DOD Nonexplosive HAZMAT only

Commercial: 800 851-8061

5.16.6. DOD Radioactive Material only

Commercial: 202 767-4011 (COLLECT)

5.16.7. Oil and Chemical Spills, Reportable Quantities of Hazardous Substances and Marine Pollutants only

Commercial: 800 424-8802 (National Response Center and Terrorist HOTLINE)

Chapter 6

BILLS OF LADING

6.1. Commercial Bill of Lading (CBL). Commercial forms and procedures, commercial carrier electronic and manual forms, and other commercial processes and documentation are considered CBLs. The DTR, Part II, also contains procedures for use of CBLs.

6.1.1. Conversion of a CBL to a GBL should occur only under rare circumstances. Comply with guidance in DTR, Part II.

6.1.2. For CBL shipments that do not have control identification, the TO must assign a control number. This number is to contain 10 alphanumeric digits. The first four positions are the origin TO Bill of Lading Office Code (BLOC), the fifth is the last digit of the fiscal year and the sixth through tenth position is the serial number. Use "00001" for the first shipment of the fiscal year and run consecutively through the fiscal year.

6.1.3. A CBL register for outbound shipments is required, either automated or manual.

6.2. SF Form 1103, GBL, and SF Form 1109, GBL Continuation Sheet. Discontinuance of GBLs for domestic freight shipments was effective 31 March 2002. However, when GBLs must be used for international shipments, the TO will ensure adequate and complete preparation and processing in compliance with the DTR, Part II. The DTR contains detailed information and direction on GBL use.

6.2.1. A GBL register for outbound shipments is required, either automated or manual. AF Form 1335, GBL Register-Outbound, may be used.

6.2.2. Distribution of GBLs. Also see DTR, Part II. When using ANG TAC F8E0, a copy of the GBL must be provided to the ANG Readiness Center, Transportation Division (ANGRC/LGTT), 3500 Fetchet Ave, Andrews AFB, MD 20762.

6.2.3. Comply with the procedures for GBL corrections or cancellations contained in DTR, Part II.

6.2.4. Due to customs issues, Korea is the only country that requires a GBL. To enable these shipments to move on a GBL yet use TPB for payment, the following applies: On the GBL the statement "For Customs Purposes Only" will be shown in the Remarks Block. For non-TPPS carriers, show 401 SCMS/GUMAB, Bldg 262, 4375 Chidlaw Rd, Wright-Patterson AFB OH 45433-5066 in the Bill Charges To block. For TPPS carriers, in the Bill To Charges block show US Bank, 601 Second Ave, South, Minneapolis MN 55402. One copy of the GBL will be placed in the Packing List on the outside of the number 1 piece and one copy will be given to the carrier. The following procedures should be used in processing a “Customs Only” GBL through CMOS:

6.2.4.1. Prepare Commercial Airway bill using CMOS or carrier system.

6.2.4.2. Apply Third Party Billing TAC or local funds to the Commercial Airway bill.

6.2.4.3. Prepare a GBL in CMOS. DO NOT release the GBL from CMOS. It is held in temporary memory long enough to print a hard copy. **Note:** Duplicate GBL numbers

should not be used for customs clearance into the Republic of Korea. There have been instances of delays because of duplicate GBL numbers.

6.2.4.4. "For Customs Purposes Only" must be clearly stated in the GBL remarks section.

6.2.4.5. After hard copies are printed, all references to the GBL should be erased/cleared from CMOS while the bill is still in temporary memory.

6.2.5. Most DOD shipments to Canada are exempt from requiring an export license under 22 CFR 126.5, Canadian Exemptions. However, items on the United States Munitions List must be shipped using a CBL and a completed Shippers Export Declaration. Refer to DTR, Part V.

6.2.6. Comply with GBL control procedures checklist. See Paragraph 6.4.

6.3. Consignee Copies. A copy of the CBL/GBL must be mailed or faxed to the consignee when electronic transmission cannot be accomplished.

6.4. SF 1103 GBL Control Procedures. All shippers will implement the following procedures to ensure positive control over GBLs. See DTR, Part II, for additional guidance.

6.4.1. TOs and their designated representative will be appointed in writing as the responsible installation GBL issuing officer and held accountable for GBL control, safekeeping and disposition. Other activities will designate in writing their points of contact (POC) to the TO.

6.4.1.1. TOs will appoint , in writing, all GBL preparers, certifying proper training has been conducted.

6.4.1.2. TOs are responsible for keeping the GBL appointment letter up to date at all times and will immediately remove individuals from the list when they are no longer authorized to prepare GBLs.

6.4.2. TOs should either separate duties or provide additional oversight to GBL preparation and processing functions.

6.4.2.1. Supervisors will periodically review a random number of GBLs prior to their issue to ensure completeness, accuracy, and monitor compliance with individual GBL block changes.

6.4.2.2. TOs should ensure 100 percent review of GBLs created for classified materiel, hazardous cargo, and other sensitive items.

6.4.2.3. GBLs will not be used for commercial, door-to-door, export shipments except where host nation customs requirements dictate.

6.4.3. TOs will maintain records of both paper and electronic GBLs issued and the supply of GBLs on hand.

6.4.3.1. Electronic records will be maintained electronically.

6.4.3.2. A file will be kept of numbers given by SDDC.

6.4.4. Open packages of ordered GBLs immediately upon receipt and inventory to verify that none are missing.

6.4.5. TOs will establish procedures for conduct of audits by personnel external to the office controlling SF 1103s. Audits must be conducted at least every 180 days to verify inventories and records.

6.4.6. Blank, unnumbered, original GBLs or reassembled GBL sets that have been issued to traffic managers or their designated representatives may not be transferred.

6.4.7. When GBLs have become unfit for use, have been issued and the planned shipment is subsequently canceled, or lost GBLs have been recovered, all parts of the GBL set, except for the original, will be destroyed. The original will be marked "canceled" or "void" and filed in the “property shipped” bill of lading file. Immediately notify SDDC, who in turn will notify all paying activities.

6.4.8. If the original is unavailable for filing, a substitute form will be annotated with a signed explanation on why the GBL is missing.

6.4.9. Lost, stolen, or otherwise unaccounted for GBLs will be immediately reported to the SDDC Operations Center (SDG3-GD-BP).

6.4.10. Shippers will maintain limited numbers of either unnumbered or pre-numbered paper GBLs. As the unit of issue for paper GBLs is 100 per package, no office should have more than 100 paper GBLs on hand. Units with automated GBL producing capabilities, which maintain unnumbered paper GBLs, should contact SDDC/MTOP-PAS for GBL numbers to be used with the unnumbered paper GBLs. These GBL numbers should only be used during times of system failure. Do not load these numbers into your automated system. These numbers will be maintained on a separate GBL register and kept under lock and key. Pre-numbered GBL forms will be ordered from USAPPC. See DTR, Part II, Chapter 206, for more details.

6.4.11. The number of electronic GBL numbers ordered at any single time will be based on an estimated 6 months' workload.

6.4.12. GBL controls must be reinforced through training, inspections and briefings.

Chapter 7

AF TRANSPORTATION FUNDING

7.1. Transportation Funding Policy. This chapter provides transportation funding policy. Current procedures are in the funding memorandums available on-line at the AFGLSC, 591 Supply Chain Management Group (SCMG) portal website: **https://www.my.af.mil/gcss-af/USAF/ep/browse.do?categoryId=p6925EC1555AC0FB5E044080020E329A9&parentCategoryId=-2120100&channelPageId=s6925EC13407A0FB5E044080020E329A9** From the menu on the left, select Library >> Transportation Funding. Every Air Force MAJCOM, shipping activity and DLA/DCMA activity with first and second destination funding requirements must ensure they are using the latest information. Additional shipping controls may be implemented due to funding shortages. For additional Air Force transportation funding assistance, contact 401 SCMS/GUMAB , DSN 787-7912, commercial (937) 257-7912, fax DSN 787-7860, commercial (937) 257-7860, e-mail address: 401.scms.gumab@wpafb.af.mil.

7.1.1. Unauthorized use. Air Force TACs are not to be used on shipments made for other services or DOD agencies except when filling a Working Capital Fund (WCF) MILSTRIP inter-service IM directed requisition (DOC ID = A2_/A4_/A5_ and Fund Code = 64, 6B or 6C on the DD Form 1348-1A). For ANG shipments (DODAAC F_6000-F_6599), see paragraph 7.2.8, below. For Government Purchase Card (GPC) or Form 9 purchases, do not use an AF SDT CMA TAC or AFWCF TAC, refer to paragraph 7.3.4, below. For FMS shipments (DODAAC/TCN begins with B, D or P), see paragraph 7.4, below.

7.1.2. Air Force Second Destination Transportation/Centrally Managed Allotment (SDT/CMA) is funded by AFMC and centrally managed by 591 SCMG/GUF (see paragraph 7.3.2. for a description of SDT/CMA usage). Each major command and/or program office needing SDT/CMA TAC funding must submit requirements to 591 SCMG/GUF for inclusion in the budget forecast. Failure to provide SDT/CMA requirements will result in shipments being unfunded.

7.1.3. Major commands and/or program offices who are issued an SDT/CMA TAC must oversee execution of the SDT usage for the program through use of the SDT/CMA TAC burn rate charts, available on the 591 SCMG portal website. The command or program office will immediately notify 591 SCMG/GUF of any shipment(s) that are suspect and should not have been moved on the cited TAC so that cost recovery efforts can be initiated. The 591 SCMG/GUF must rely on the command or program office who know more about their movement requirements than 591 SCMG/GUF personnel in identifying suspect shipments. This oversight will ensure the SDT/CMA TACs are only used for their intended purposes.

7.2. Transportation Funding Procedures. Whether a MILSTRIP or non-MILSTRIP shipment, including shipments by other military services and agencies, it is the shipment originator's responsibility to identify the correct funding by assignment of the appropriate TAC or Operations and Maintenance (O&M) appropriation. Deployment and Distribution Flight personnel must make every attempt to obtain required funding information from their customers or the customer's unit Resource Advisor. When the shipment originator cannot provide required information, TO personnel will use all available resources such as Tracker-Lite, Funding Memorandums, or contact 401 SCMS/GUMAB for assistance. The TO is authorized to refuse

any shipment without proper funding information but only after all attempts to resolve funding issues are exhausted.

7.2.1. The TAC is a 4-position alphanumeric code that identifies the account to pay for movements within the DTS via AMC, MSC, and SDDC intermodal lift and port handling costs. The TAC also pays for movement by CBL when TPB procedures apply (see paragraph 12.3.). The complete funding appropriation, to include Standard Document Number (SDN), is used on bills of lading when local funds apply. **NOTE:** TOs must forecast and budget for sufficient local O&M funds (462 EEIC) to support shipments for authorized base units when use of Air Force Working Capital Fund (AFWCF) or Second Destination Transportation/Centrally Managed Allotment (SDT/CMA) funds are not applicable.

7.2.2. Funding Identification for MILSTRIP shipment. LRS Commanders will ensure procedures are in place to require LRS Materiel Management to validate TACs printed on DD Form 1348-1A, *Issue Release/Receipt Document*, or DD Form 1348-1A without TACs generated by the Standard Base Supply System prior to delivery at TO. LRS Materiel Management personnel have inherent expertise to identify shipments as IM directed Redistribution Order (RDO) or lateral support through interpreting the document identifier. TOs will use current funding guidance (funding memos, messages, etc.) to verify TAC assignment has been appropriately applied. This is especially critical during post/post operations. Use of erroneous TACs will result in 591 SCMG/GUF re-imbursement off-set actions against unit funds to replenish the SDT CMA.

7.2.3. For non-MILSTRIP shipments, where the DD Form 1149 serves as the shipping document, the TO will use the customer's funding appropriation or local O&M for OCONUS/CONUS movements.

7.2.3.1. Test, Measurement and Diagnostic Equipment (TMDE), often referred to as PMEL equipment, requiring calibration which is shipping from a CONUS base to another CONUS location is a local funding responsibility. SDT CMA TAC F8TM will pay for return of the TMDE asset from the repair facility to the base, any required over ocean movement to/from OCONUS, port handling charges, and intra-/inter-theater movements via DTS. OCONUS inland is the responsibility of the OCONUS MAJCOM/base. Assign TAC F8TM to non-WCF assets. Note: Use Tracker Lite to determine if asset is WCF or non-WCF. TMDE shipments **require** use of Project Code 571. PMEL labs must annotate DD Form 1149 with the project code and the statement "Recently repaired or calibrated" in order to use TAC F8TM. Newly purchased TMDE which has been tested and accepted at Heath OH may be moved to the bases using TAC F8TM and project code 489.

7.2.3.2. Refer to the Air Force Funding Memo for other exceptions to use of local funding on DD Form 1149 shipments.

7.2.4. The TO will refer to DTR Part II, Appendix V5, Paragraph B.3. for Munitions/Missile shipments.

7.2.5. When using customer's funding appropriation, in addition to the line of accounting (LOA), the customer must also provide the Standard Document Number (SDN) which equates to the obligating document, i.e., AF Form 406, Miscellaneous Obligation/Reimbursement

Document (MORD). For over ocean movement, units with an individual unit TAC must provide the TAC and corresponding funding appropriation on the DD Form 1149. Other TACs appropriate for over ocean movements are found in the funding memo (Paragraph 7.1.). NOTE: Use of DD Form 448, Military Interdepartmental Purchase Request may be used only for other military services or agencies to transfer funds into local O & M base funds to affect shipment.

7.2.6. EAF/AEF. TOs will ensure shipment documentation, in support of Expeditionary Aerospace Forces (EAF)/Air and Space Expeditionary Forces (AEF) deployments, humanitarian support, exercises or other special projects contain, if applicable, the assigned JCS (9-series) or AF project code and Emergency and Special Programs (ESP) code. The assigned ESP code will be annotated on all movement documents that obligate funds for the specific program (ESP:*** (insert code). Specific ESP codes are on the SAF/FMB web site at the end of this paragraph. Click on the FMB tab. Access to the AF Portal is required. The base or MAJCOM will fund exercise deployment/redeployment that is not in direct support of a JCS project code. ESP Codes URL: https://www.my.af.mil/gcss-af/USAF/ep/browse.do?programId=298625&channelPageId=-351562&parentCategoryId=-351617.

7.2.7. Misdirected Shipments. Refer to Chapter 10, Paragraph 10.10. for procedures.

7.2.8. Air National Guard Shipments. When assets are shipped to an ANG base (DODAAC F_6000-F_6599), the funding responsibility belongs to the ANG for non-WCF asset shipments (RDOs and returns of serviceable assets from depot repair) and lateral support from an active duty base. Contact the receiving ANG base for local O&M fund cite when moving CONUS, when moving to OCONUS ANG bases, use the ANG TAC F8E0. Lateral support shipments for non-WCF assets from an ANG base to an active duty base is the funding responsibility of the receiving base. Receiving base must provide a long line fund cite when moving within CONUS.

7.2.8.1. SDT/CMA TACs will fund movement of ANG assets in support of a contingency, but shipment must cite the appropriate JCS 9-series project code.

7.2.8.2. Munitions shipments directed by the ANG are not a part of the PACER AMMO Program and will be funded by ANG units using local O&M funds or ANG TAC as directed by NGB/A4RDT. If munitions movement supports ANG activation in support of a contingency, SDT/CMA will fund the movement, see Para 7.2.8.1.

7.3. Funding Categories.

7.3.1. Defense Working Capital Fund (DWCF). DWCF is a revolving fund that combines previously existing commercial or business operations under a single treasury account but keeps prior organizational structure and command authority relationships. Revolving funds are financial systems that are dependent on the sale of goods and services for the cash necessary to finance the activities to certain DOD organizations. They do not have direct appropriations and operate at zero profit or loss. The AFWCF, Supply Management Activity Group (SMAG) is a subset of the DWCF and consists of the divisions shown in Table 7.1. below.

Table 7.1. SMAG Divisions.

AFWCF Supply Management Activity Group (SMAG) Divisions						
Division	**Budget Code**	**Fund Code**	**Responsible For**	**Type Items Included**	**ERRC Designators**	**Additional Information**
MSD—Material Support Division	8	64	USAF-managed reparable and systems support items	General weapons systems-related items (i.e., engine blades, aircraft spares)—expendable bit and piece support	XB3, XF3, XD1, XD2, XD3	Line Replaceable Units (LRU) and Shop Replaceable Units (SRU)
GSD—General Support Division (Consumable)	9	6C	Non-USAF managed items (e.g., DLA, GSA)	General support items—expendable bit and piece support such as nuts, bolts, and O-rings	None	
MDD—Medical/Dental Support Division	None	6B	USAF Medical Logistics Office-managed items	Medical support items—expendable and medical material	None	

7.3.2. Air Force Second Destination Transportation/Centrally Managed Allotment (SDT/CMA). SDT/CMA pays for certain movements of non-AFWCF materiel. This includes movements of munitions, aircraft engines, and investment items that are managed on an Air Force Allowance Standard. SDT/CMA funds the following:

7.3.2.1. CONUS movement from a depot level or contractor repair facility to base.

7.3.2.2. Over ocean by MSC or AMC.

7.3.2.3. CONUS port handling by SDDC.

7.3.2.4. OCONUS inter or intra-theater movement by AMC or MSC, only when more cost effective than ground transportation or no other alternative is available. Cost comparison or justification documentation must be retained by the shipper.

7.3.2.5. CONUS inter-MAJCOM movements when IM directed.

7.3.2.6. Commercial door-to-door (BPA/WWX) where available. Cost comparison must prove commercial transportation is cheaper than AMC unless cargo is MICAP/999.

7.3.3. MAJCOM or Base Funds. These funds pay for:

7.3.3.1. CONUS movement of non-AFWCF items moving to a repair or storage facility.

7.3.3.2. CONUS movement of any non-AFWCF intra-MAJCOM lateral support shipment regardless of IM direction, including movement to an APOE/WPOE/CCP.

7.3.3.3. CONUS movement of shipments coded as ISU, DOR, or MSI in the document identifier field of the DD Form 1348-1A.

7.3.3.4. CONUS movement of any non-AFWCF shipments coded as SHP, FTR, or 1ET in the document identifier field of the DD Form 1348-1A, including movement to an APOE/WPOE/CCP.

7.3.3.5. Overseas MAJCOM pays theater port handling of all non-AFWCF materiel.

7.3.4. Process Exceptions for Personal Property (Household Goods, Unaccompanied Baggage, Privately Owned Vehicles (POV), Materiel Movement, Local Purchase and Purchase Card Micropurchase Shipments within the DTS. The majority of Air Force sponsored personal property and materiel movements within the DTS are charged to the funding appropriation and/or TAC cited on the TDY/PCS order or to the TAC on the base supply document. Certain authorized DTS movements must be paid from the unit/base O&M funds requiring the establishment of a TAC. These shipments include return of excess household goods to non-temporary storage in the CONUS in conjunction with assignment to government quarters, micropurchases made through the GPC program, and materiel movement when normal TACs do not apply. For these shipments, the following applies:

7.3.4.1. When shipments of personal property, materiel, local purchase, and purchase card shipments are entitled to move in the DTS, but are funded by unit/base O&M funds, a TAC chargeable to the O&M funds must be established prior to using AMC, MSC, or SDDC services. O&M funds used to pay for purchase card shipments expire on 30 Sep of each FY. Unless current FY funding is provided, TACs will be deleted from the system on 1 Oct. Purchase card users should be made aware that if a shipment changes mode from 30 Sep to 1 Oct, the previous year's FY funds would cease on 30 Sep.

Example: if a shipment arrives at a POE on 30 Sep but does not depart the POE until 1 Oct, the new FY money will have to be in-place or the shipment will be frustrated at the port until the new FY money is provided.

7.3.4.2. Procedures for providing a LOA and MORD to obtain a TAC and completing shipping documents are located under Transportation Funding on the 591 SCMG portal website. When moving these shipments, normal DTR, Part II, clearance procedures apply. TP-4 deferred airfreight is also an option.

7.4. FMS shipments. At no time will any shipper assign an AF SDT CMA TAC to any FMS shipment. FMS shipment costs should be covered by either Working Capital Fund (WCF) TACs or the FMS case involved.

7.4.1. TAC construction for non-WCF Air Force sponsored Foreign Military Sales (FMS) cargo shipments are contained in DTR, Part II.

7.4.2. For FMS shipments of WCF materiel, only the CONUS inland portion of transportation (to the aerial/water port or FMS freight forwarder) is the funding responsibility of the shipping depot using WCF. Use the appropriate WCF TACs as shown on the WCF TAC table. The balance of transportation charges is funded through the FMS Letter of Offer and Acceptance (LOA) or paid by the FMS customer's freight forwarder.

7.4.3. FMS Supply Discrepancy Report (SDR), formerly Report of Discrepancy (ROD), cargo shipments. The TAC for AF sponsored FMS SDR cargo shipments is DIII. For TAC DIII use the following long line of accounting classification:

97-11X8242.L009 8401 **DIII GBL S843000
** = Insert 2 character FMS country code.

7.4.4. The TCN for returning SDR material will be constructed from the requisition document number governing the discrepant item(s). The TCN and TAC must be shown in the “Description of Articles” block of the GBL or CBL.

7.4.5. Direct questions pertaining to FMS shipments to 555 ILS/LGIP, DSN 986-1457/3518/Commercial (937) 656-1457/3518.

Chapter 8

PACKAGING AND HANDLING

8.1. Uniform Procedures. Joint Service Publication AR 700-15/NAVSUPINST 4030.28D/AFMAN 24-206_IP_IP/MCO 4030.33D/DLAI 4145.7, *Packaging of Materiel*, establishes uniform procedures for packaging Department of Defense (DOD) materiel. Use Air Force packaging procedures in accordance with joint directive AFMAN 24-206_IP, AFPD 24-2 and this instruction.

8.2. Packaging Operations. The size and mission of an activity determines the required size of base packaging facilities and the type, kind, and amount of equipment needed to package materiel. Locate the packaging areas near the shipping or supply processing area.

8.3. Facilities. Each activity must have the basic facilities and equipment to package items that are:

8.3.1. Opened for periodic inspections.

8.3.2. Received inadequately packaged for storage.

8.3.3. Shipped off-base, including redistribution or return of declared excesses and return of reparable items to a prime ALC depot or Technology Repair Center (TRC).

8.4. Authorization of Equipment. Allowance Standard 874, part C, authorizes the cleaning, drying, preserving, packing, and marking equipment for base-level packaging operations. Authorization and funding for conveyer or other mechanized materiel handling equipment are subject to AFMAN 23-110, *USAF Supply Manual*, Vol. VII, Part 1, which explains how to request assistance in analyzing and recommending improvements in materiel handling methods and systems installations.

8.5. Packaging Line Layout. Materiel flows from work station to work station according to the sequence of packaging operations, regardless of the size of the operation and should include:

8.5.1. An area for receiving, inspecting, and identifying material.

8.5.2. An administrative and work-process planning area for reference materials, such as T.O.s, Special Packaging Instructions (SPIs), specifications, standards, and related logistics publications.

8.5.3. A materials storage and supply area for maintaining bench stock preservative and packaging supplies and recycled containers (other than unit-stored reusable containers).

8.5.4. An industrial equipment area for fabricating bags, boxes, crates, intermodal container blocking and bracing, printing labels and tags, and for feeding supplies (like tapes and adhesives) into the packaging line.

8.5.5. A cleaning, drying, and preserving area.

8.5.6. A unit packing area large enough to handle variable workloads.

8.5.7. An area for containerizing and packing oversized materiel that cannot be handled in the unit packing area. This area must contain or be located near the woodworking machinery and be accessible to mechanized material handling equipment. Due to hazardous nature of

munitions, the TO must ensure personnel are trained and equipped to conduct containerized blocking and bracing operations at alternative locations.

8.5.8. At least one Electrostatic Discharge (ESD) protective work station where trained personnel can package Electrostatic Discharge Sensitive (ESDS) items. This must include a conductive work surface and personnel grounding devices. T.O. 00-25-234, *General Shop Practice Requirements for Repair, Maintenance, and Test of Electronic Equipment*, contains detailed information about ESD protective work stations. Post signs prohibiting entry of unauthorized personnel and static-producing materials in areas designated for packaging ESDS items.

8.5.9. A staging area where hazardous materials can be segregated and stored pending shipment as determined by CFR 49.

8.6. OSHA and AFOSH Standards. Ensure that health and safety standards are consistent with applicable Occupational Safety and Health Act (OSHA) and Air Force Occupational Safety and Health (AFOSH) standards when planning the type and layout of facilities and equipment. See Chapter 17 for guidelines.

8.7. Packaging Cost Control. Major commands must establish procedures to ensure that all bases under their jurisdiction include necessary packaging requirements for all procurements.

8.7.1. Local Purchase Items. As a rule, code items bought at base level for local purchase (LP) are intended for immediate use. In most cases, the vendor or manufacturer standard packaging adequately protects these items; you may use this packaging if it meets 49 CFR requirements and safety standards. Purchasing documents for LP materiel must contain the statement: "Military packaging is not required." The packaging provided must protect the item to destination and conform to applicable 49 CFR or intrastate regulations. This statement permits rejection of substandard packaging at delivery based on 49 CFR regulations.

8.7.2. Packaging Economy. Commanders will emphasize to base personnel that protection of materiel enroute to the warfighters is paramount. The importance of proper packaging and use of economical packaging techniques can save significant Operations & Maintenance (O&M) funds while minimizing the creation of solid waste. Emphasize this philosophy in command publications and correspondence and during staff visits to the bases. Examples of areas where economies and improvements may be put into effect are:

8.7.2.1. Recovery and re-use of serviceable reusable containers and packaging materials.

8.7.2.2. Keeping specialized containers for reshipment or return of items to the using or repair activity.

8.7.2.3. Standardizing the number and types of packaging materials purchased.

8.7.2.4. Ensuring that units use materiel for its intended purpose.

8.7.2.5. Anticipating long term requirements for reusable containers and packaging materials so units can purchase them in larger, more economical quantities.

8.7.2.6. Using the lowest acceptable levels of preservation and packing to meet the anticipated logistics and warfighter environment.

8.8. Preserving and Packing Items of Supply and Equipment.

8.8.1. Cleaning and Drying. Carefully clean and dry all items by any suitable process that does not harm the item before applying preservation techniques.

8.8.2. Preservation. All items (serviceables, reparables, retrograde, etc.) placed in storage or shipped to another activity (including depot) will be preserved, as required, to prevent deterioration from corrosion, mildew, decay, and mold and to protect from attack by microorganisms, vermin, or rodent. For reparable items, preservation requirements are usually of a lesser degree than their serviceable counterparts because this materiel is usually shipped to a depot or TRC for short-term or controlled storage. However, many items do require the same high level of preservation protection. These include some engines, navigational equipment, gyros, landing gear and ESDS items. This is due to their high dollar value or their susceptibility to rapid deterioration and/or sensitivity to other elements. Before attempting to determine the Method of Preservation for any individual item, check the special packaging instruction and packaging requirements. If no special packaging instructions or packaging requirements are available, examine the characteristics of the item such as its physical composition and the nature of the surface or requirements for a similar item. Contact the prime AFGLSC packaging office for preservation and packing guidance.

8.8.2.1. Selecting the Method of Preservation. The type of preservation required for items during processing varies according to the item characteristics and types of exposure which may be encountered, and with the materials from which they are made. A SPI or T.O. prescribing a method of preserving a particular item or group of items takes precedence over general guidelines. When you have no specific instructions, use the tables in MIL-STD-2073-1 to select the method/submethod of preservation and the container.

8.8.2.2. Preservation methods for military packaging are standardized. There are five basic Methods of Preservation (MOP). These methods are known as Method 10 (physical protection), Method 20 (preservative coating only, with greaseproof wrap as required), Method 30 (waterproof or waterproof-greaseproof protection), Method 40 (watervaporproof protection with preservative as required) and Method 50 (watervaporproof protection with desiccant). Refer to MIL-STD-2073-1 for various specific techniques on these methods of preservation, general requirements and suggested methods of application. Additionally, MIL-STD-2073-1 specifies specialized military preservation requirements for items with specific characteristics such as ESDS Electromagnetic Impulse (EMI) materiel.

8.8.2.3. Preserving Items for Shipment or Storage. When preserving items for shipment or storage:

8.8.2.3.1. Use a preservative whose application, use, or removal will not damage the item or impair item function. For example, do not use petroleum-based preservatives on rubber or fabric products.

8.8.2.3.2. Directly after cleaning and drying of the item, the preservative (where required) shall be uniformly applied by any appropriate procedure that permits coating all necessary surfaces and wrapped as required..

8.8.2.3.3. Properly cushion, block, or brace the item in the unit container.

8.8.2.3.4. If the item is to be exposed directly to precipitation, an over-wrap of appropriate conforming barrier material should be used, otherwise any other usual method of supplying physical protection will be sufficient.

8.8.2.3.5. Ensure that all materials used in cleaning, drying, preserving, wrapping, cushioning and packing are clean and free from defects.

8.8.2.3.6. General knowledge of the composition, characteristics, intended uses and methods of application of packaging materials (preservation) is found in AFPAM(I) 24-237, *Packaging of Materiel, Preservation*.

8.9. Packing.

8.9.1. DOD Levels of Packing. DOD established two levels of packing: A and B. These packing levels, defined in MIL-STD-2073-1 and AFMAN 24-206_IP, guide military components and their commercial industry suppliers in determining the required protection. Attachment 3 provides a table of common applications for the levels of packing.

8.9.1.1. Level A. Packing protection required to meet the most severe worldwide shipment, handling and storage conditions. Level A packs must, in tandem with the applied preservative, be capable of protecting materiel from the effects of direct exposure to extremes of climate, transportation, terrain and operational environments.

8.9.1.2. Level B. Packing protection required to moderate worldwide shipment, handling and storage conditions. Level B packs must, in tandem with the applied preservative, be capable of protecting materiel from the effects of indirect exposure to extremes of climate, transportation, terrain and operational environments.

8.9.2. Guidance Sources for Packing. A SPI, T.O., or other service/agency approved document/drawing takes priority over general instructions. In the case that SPI and T.O. guidance differ, SPI requirements take precedence over T.O.s or other documents. The prime AFGLSC Packaging Specialist will formally coordinate with the responsible Equipment Specialist to review weapon system specific T.O.s as applicable. The AFGLSC Packaging Specialist, Equipment Specialist and T.O. Manager shall coordinate necessary actions to ensure SPIs and T.O.s are congruent with respect to Packaging, Handling, Storage & Transportation PHS&T requirements. If a SPI or T.O. does not provide specific guidance, use:

8.9.2.1. MIL-STD-2073-1 to identify and select the unit and intermediate containers, preservation, wrap, cushioning and dunnage requirements.

8.9.2.2. T.O. 00-85-B-3, *How to Package Air Force Spares*, to identify and select Fast Pack and Standard Pack details on packing.

8.9.3. Primary and Alternate Packs.

8.9.3.1. Give only one SPI number for NSNs assigned to the primary SPI.

8.9.3.2. For long-life and short-life containers prescribed for the same item, specify them in the same SPI. The long-life container is the primary pack and the short-life container is the alternate pack.

8.10. How to Pack Items. Packaging must prevent damage or harm to items during storage, issue or transfer. Depot reparable items shall have a SPI assigned, whether drawing, Fast Pack or Standard Pack and must be SPI packed accordingly regardless of materiel condition. Other non-depot reparable items, based on their physical characteristics, can also be SPI packed. Pack single items according to the applicable SPI or T.O., unless otherwise directed by waiver authority to deviate. Waivers are issued from the prime AFGLSC packaging office for specific weapon system assets that they manage. The prime AFGLSC packaging office can be found in SPIRES under the Source Of Supply (SOS). If an item is not assigned a SPI and no packaging data is available, contact the prime AFGLSC packaging office for packing guidance. The prime AFGLSC packaging office will provide guidance regarding the use of appropriate cushioning and container to pack and protect the item and for establishment of packaging data requirements. When consolidating two or more packed line items in a single container, place the heaviest or most dense items in the bottom. Avoid packing light, fragile items in the same pack with heavy, rugged items. Arrange the contents of the pack to provide the greatest protection to the interior packages. Reference paragraph 8.10.20.2., for additional guidance on container consolidation.

8.10.1. Hazardous Materials and Regulated Articles. Hazardous materials must be preserved, packed, and marked according to the applicable directives specified in for hazardous materials and hazardous waste. Unitization procedures in this document do not apply to the materials regulated by AFMAN 24-204_IP.

8.10.2. Reparable Returns and Retrograde Shipments. All reparable returns and retrograde materiel shall be cleaned and dried before TO acceptance, preserved as required, packed and marked before being shipped. Materiel shall be packed in their assigned SPIs or Fast Pack reusable containers, unless otherwise directed by waiver authority to deviate. Authorized packaging, handling, storage & transportation (PHS&T) deviations for Fast Packs and Standard Packs when the correct size is unavailable for transportation priority 1 and 2 shipments of unserviceable and serviceable items are as follows: 1) Use of the next larger size of Type I (Vertical Star Pack) or Type II (Folding Convoluted Pack), provided there is no decrease in any of the container dimensions; and 2) Use of next larger size standard pack containers. A complete list of Fast Pack and Standard Pack types and sizes can be found in T.O. 00-85B-3. The item must be wrapped sufficiently to build up the item so it fills up the cavity. Cushion, block, and brace each reparable item for return to depot or TRC. Units shall give repairable items the prescribed packaging protection requirements to prevent damage or deterioration during intra-base handling and shipment to the prime ALC depot or TRC. When moving reparable items intra-base (on-base) or inter-base (between bases), transport them in the assigned container, specified SPI pack or equivalent handling device. If the assigned container is not available, scope the Reusable Container Worldwide Warehouse (RECON) system for lateral support or contact the prime AFGLSC packaging office for requesting waiver authority to deviate for authorized shipments of an equivalent or suitable substitute container. A waiver authority number to deviate and applicable instructions will be provided. Additional guidance on waiver authority to deviate is found in Chapter 9.

8.10.2.1. Use the replacement part package to repackage the reparable item for return shipment. If a SPI or T.O. contains packaging instructions, comply with the applicable document.

8.10.3. Wood Packaging Material (WPM) Restrictions.

8.10.3.1. The United Nations (UN) International Plant Protection Convention (IPPC) imposed restrictions for WPM to mitigate the risk of introducing plant pests, including pathogens, that can be harmful to agriculture and to natural, cultivated and urban forest resources. DOD components engaged in the packaging of materiel for international shipment must comply with the UNIPPC requirements in order for shipments to move internationally unimpeded. WPM is defined as wood or wood products (excluding paper products) used in supporting, protecting or carrying a commodity (includes dunnage). This includes, but is not limited to, wood pallets, skids, crates, load boards, pallet collars, wooden boxes, reels and dunnage.

8.10.3.2. DOD shipments departing or returning to the United States containing WPM must be treated for compliance IAW IPPC International Standards for Phytosanitary Measures (ISPM) Number 15. WPM must consist of the use of debarked wood (with a specified tolerance for remaining bark) in addition to "Kiln Dried (KD)" or "Heat Treated (HT)" to a standard core temperature of 56 degrees Centigrade (133 degrees Fahrenheit) for 30 minutes. It should be emphasized that the heat treatment standard is that the "core" of the wood reaches 56 degrees Centigrade for 30 minutes. The specified tolerance for remaining bark is any number of visually separate and clearly distinct small pieces of bark may remain if they are less than 3 cm in width (regardless of the length or greater than 3 cm in width, with the total surface area of an individual piece of bark less than 50 square cm. Compliant non-manufactured WPM is marked either heat-treated or KD/HT as established by American Lumber Standards Committee, Incorporated (ALSC) or treated (fumigated) with methyl bromide (MB) as established by National Wood Pallet and Container Association (NWPCA). In addition to the debarked wood and HT standard, the WPM must be permanently marked with an approved ISPM 15 or DOD Pest Free certification stamp by trained and certified DOD personnel. Fumigation by MB is not authorized unless specifically approved by the Service or Agency Senior Acquisition Official and the Component WPM Program Manager.

8.10.3.3. WPM exempt from these requirements are materials that have gone through a manufacturing (finished) process (i.e., corrugated fiberboard, plywood, particleboard, veneer, and oriented strand board (OSB)), pieces of wood less than 6mm (.024 in) in any dimension, and “loose wood packing materials” as defined in 7 CFR Part 319.40-1. Examples of loose WPM include excelsior wool (wood wool), sawdust, and wood shavings, produced as a result of sawing or shaving wood into small, slender and curved pieces. Dunnage is not always loose wood packing materials; when it is not, it must meet the WPM requirements.

8.10.3.3.1. When building plywood boxes, if the plywood is nailed to solid wood frames or contains solid wood cleats, the boxes must also meet the WPM requirements.

8.10.3.4. The WPM requirements apply to all DOD shipments worldwide.

8.10.3.5. Any activity purchasing WPM for use in building or assembling packaging will comply with the following requirements for purchasing the wood. If WPM is already ISPM 15 stamped, re-marking with the DOD Pest Free stamp is not required, unless the ISPM 15 marks are cut off.

8.10.3.5.1. All wooden pallets and wood containers produced of WPM shall be constructed from heat treated (HT to 56 degrees centigrade for 30 minutes) material and certified by an accredited agency recognized by the American Lumber Standards Committee (ALSC) in accordance with the IIPPC ISPM 15.

8.10.3.5.2. All WPM purchased outside of the United States must be in compliance with the WPM requirements. Ensure the WPM is permanently marked with the country's authorized ISPM 15 certification mark.

8.10.3.6. All Air Force activities responsible for establishing preservation and packing requirements for contracts resulting in delivery of any product to the Air Force must ensure WPM in new contracts include the requirements outlined above. Additionally, all existing contracts (including contracts administered by DCMA) and delivery orders that result in deliveries to the DOD must be modified to reflect the requirements above.

8.10.3.7. KD/HT or HT lumber; or KD/HT or HT WPM must be stored separately from any non-KD/HT or HT lumber; or non-KD/HT or HT WPM. A minimum segregation of four feet is recommended in storage and warehouse conditions to avoid intermingling of stock.

8.10.3.8. Air Force activities shall keep documentation identifying all lumber or WPM procured which meets the above KD/HT or HT requirement. WPM records retention at each certified site shall be for a period of not less than two years. This information will be required for audit purposes. As a minimum, these records will identify:

8.10.3.8.1. Purchase Order/Requisition/Receipt and Quantity of KD/HT or HT lumber or KD/HT or HT WPM purchased.

8.10.3.8.2. Work order(s) or other documentation that identifies amount of board feet (ft) used.

8.10.3.8.3. Procedures for the control of the ISPM 15 and DOD Pest Free certification stamps. Certification stamps must be secured to ensure only certified personnel use them.

8.10.3.8.4. Training certifications for any person authorized to use the IPPC and DOD certification stamps.

8.10.3.9. Existing or previously packaged material can be tested, inspected and certified as pest free by DOD shipping activities if the WPM meets one of the following requirements:

8.10.3.9.1. If the pack date is less than five years and is not packaged in compliant WPM, it will be inspected to ensure the WPM is bark free, contains no bore holes larger than 3mm, and the moisture content is less than 20 percent.

8.10.3.9.2. If the pack date is five years or older (that can be verified/validated), it will be inspected ensuring the WPM is bark free, contains no bore holes larger than 3mm, and is not infested by pests. Moisture content test is not required.

8.10.3.9.3. When the WPM is inspected as authorized in paragraphs 8.10.3.9.1. and 8.10.3.9.2. above and found compliant, the WPM will be permanently marked with

the DOD Pest Free mark. The IPPC international mark may not be used for this inspection and certification process.

8.10.3.10. When the WPM is inspected and certified as authorized in paragraphs 8.10.3.9.1. and 8.10.3.9.2. above, the following information for each shipment must be maintained:

8.10.3.10.1. NSN

8.10.3.10.2. Quantity

8.10.3.10.3. TCN

8.10.3.10.4. Tested Moisture Percentage

8.10.3.11. Visual inspection of the wood must confirm the WPM contains no bore or grub holes larger than 3mm and no presence of visible bark.

8.10.3.12. Previously packaged material that fails any of the requirements above must be repackaged using HT compliant WPM.

8.10.3.13. Any new container/pallet must be constructed/repaired with only debarked and KD/HT or HT wood that meets the requirements above.

8.10.3.14. WPM Markings.

8.10.3.14.1. The DOD Pest Free mark is accepted by USDA APHIS and US Customs and Border Protection (CBP) of the Department of Homeland Security for imports into CONUS of retrograde materiel packaged in/on WPM. The DOD Pest Free mark is to be used for imports back into CONUS. Temporary and emergency situations may warrant this certification mark process. The DOD Pest Free process is to be used: when there are no established host nation ISPM 15 programs (non-signatory ISPM 15 country); when there are austere conditions; when the deploying force will occupy the location for a limited time (less than 180 days); when the WPM brought with the deploying force will be returning directly to CONUS; or when importing back into CONUS existing WPM stored at an OCONUS location with a valid date of pack earlier than 31 Dec 07. Existing or previously packaged materiel that passes the tests and visual inspections will be permanently marked (stenciled, branded or stamped) in a visible location, preferably on at least two opposite sides of the article, with the DOD Pest Free mark. Use the activity DODAAC where required as identified in Figure 8.1.

Figure 8.1. DOD Pest Free Mark.

8.10.3.14.2. WPM (pallets, containers, reels, boxes, crates, etc.) assembled/built at an Air Force (including AFRC and ANG) installation utilizing debarked wood in

addition to KD/HT or HT compliant lumber will be permanently marked (stenciled, branded or stamped) with the ISPM 15 mark. Unit loads of multiple containers may be marked using marking boards and placed on two opposite sides of the load. Wooden pallets will be marked on two stringers, opposite sides. DOD Components that are self-certified or ALSC accredited are authorized to use the ISPM No. 15 certification mark on all WPM that fully complies with ISPM No. 15 guidelines. The ISPM No. 15 self-certification marking (see Figure 8.1) shall display the letters "US" in bold (a), the packaging activity's Department of Defense Activity Address Code (DODAAC) (b), and either "HT" denoting heat treated WPM or "MB" denoting WPM —fumigated with Methyl Bromide as noted in the Figure 8.2 by "HT"(c). Item (e) is the approved International symbol for compliant wood packaging material. No extraneous markings are authorized within the border of the certification mark. Outside the border of the certification mark will include the TRADEMARK (a) which represents the logo of the U.S. services and will be displayed as shown. DOD Components are only authorized to use the "DOD" (a) as the DOD trademark when self-certifying. The marking "DUN" (f) is used strictly for dunnage, otherwise it is left blank. DoD Components that are ALSC accredited may only use and apply the certification marking supplied by ALSC under contract. Previous versions of the certification markings may be used until the marking device becomes worn and no longer provides a clear mark. The exception is branding irons, where the marking plate must be changed to the new marking design not later than 1 Jan 2013.

Figure 8.2. ISPM 15 Certification Mark

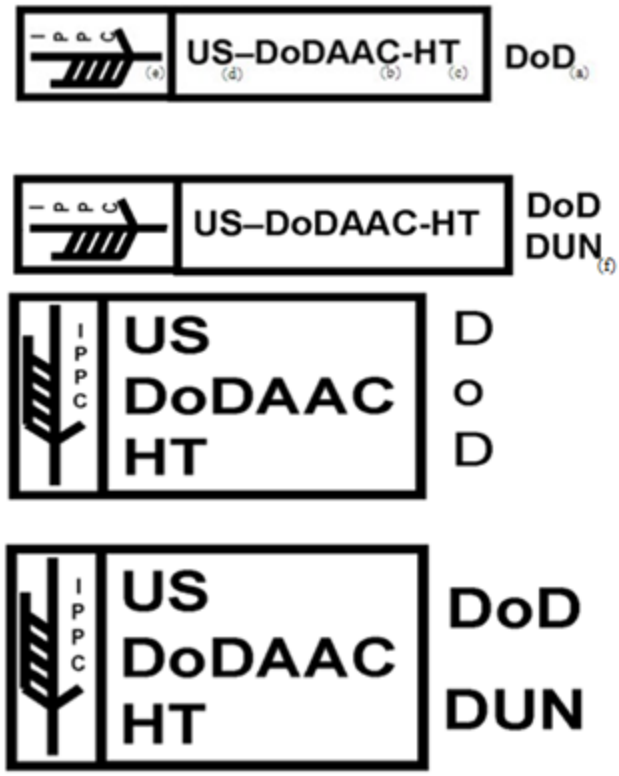

8.10.3.14.3. WPM certification marks to be procured by activities are: 1) A DOD Pest Free stamp; 2) AN ISPM 15 certification stamp; and 3) an ISPM 15 certification

mark applicable to dunnage. Activities must have these stamps on-hand. Marking stamps must be permanent, waterproof, use petroleum resistant inks and must maintain sufficient durability during exposure to field conditions. Marking shall be IAW MIL-STD-129.

8.10.3.15. Management Controls. Air Force activities shall report, audit and enforce WPM standards and measures. Each Air Force activity shall register their DODAAC and WPM Site Custodian(s) via the DOD WPM System at **https://tarp.navsisa.navy.mil/wpm**. Installations that have two or more packaging mission support activities, identified by separate DODAACs, shall have separate WPM programs in terms of custodial management controls. Accordingly, each activity shall register their DODAAC and WPM site custodians via the DOD WPM Management Toolset, maintain separate WPM certification marks with the packaging activity‘s DODAAC and execute custodial management controls and reporting requirements. Each activity shall provide monthly reports as indicated below to the DOD WPM Management Toolset within two weeks (14 days) of the reported month. WPM

8.10.3.15.1. WPM Site Custodian(s) Reporting. Air Force activities shall provide two mandatory monthly reports to the DOD WPM System Toolset: 1) Lumber usage monthly report; and 2) DOD Pest Free monthly report. The reports must be posted to the DOD WPM System within two weeks (14 days) of the reported month. If the DOD Pest Free stamp is not utilized, custodians will zero-out the numbers on the applicable DOD Pest Free monthly report. The following reporting requirements are required:

8.10.3.15.1.1. Activities using the DOD Pest Free certification will maintain records of certified materiel by documenting the following information:

8.10.3.15.1.1.1. Requisition number, item NSN, moisture reading, visually inspected for boreholes over 3mm in diameter (Yes/No), quantity of WPM marked, inspector’s signature verifying WPM meets DOD requirements and WPM is properly marked, and the date of certification.

8.10.3.15.1.2. Activities fabricating new WPM or repairing WPM with new lumber and applying the IPPC certification mark will track the following:

8.10.3.15.1.2.1. Lumber receipts including the receipt or requisition number, mill code, lumber NSN or identification number, lumber thickness, lumber width, lumber length, quantity received and date of receipt.

8.10.3.15.1.2.2. Lumber used including the cut and fabrication work order, lumber NSN or identification number, lumber thickness, lumber width, lumber length, quantity received and date of fabrication.

8.10.3.15.1.2.3. A lumber usage report will be prepared identifying the lumber on hand at the beginning of the month, lumber received, lumber used, and final inventory of lumber on hand at the end of the month.

8.10.3.15.2. WPM Site Audit Inspections. Appointed and certified WPM Site Auditors shall perform annual on-site audits. WPM Site Auditors shall not be assigned to the Deployment and Distribution Flight. The WPM Audit Inspection Checklist is found in Appendix 4. WPM Site Auditors will verify the site

documentation records are accurate and on file in the packaging and preservation office and/or cargo movement element of the TO. WPM annual audits shall be accomplished for the following year and entered in the DOD WPM Management Toolset NLT 14 Jan.

8.10.3.15.2.1. WPM audit results shall be posted to the WPM system toolset within two weeks (14 days) of the reported month. Installations that have completed three consecutive compliant monthly WPM audits on time will be going to quarterly audits. Installations that have completed two consecutive compliant quarterly WPM audits will be going to semi-annual audits. Following are the schedules for quarterly and semi-annual audits:

Quarterly Audit Months	Submit Audit
March	NLT 14 April
June	NLT 14 July
September	NLT 14 October
December	NLT 14 January

Semi-Annual Audit Months	Submit Audit
June	NLT 14 July
December	NLT 14 January

Annual Audit Month	Submit Audit
December	NLT 14 January

8.10.3.15.3. Consequences of Audit Failure/Non-Compliance.

8.10.3.15.3.1. All commercial and Air Force activities responsible for repairing or fabricating WPM resulting in Air Force transnational cargo movement to American Lumber Standards Committee (ALSC)/National Wood Pallet and Container Association (NWPCA) requirements shall receive warnings, suspensions and withdrawal of ALSC stamp marking privileges for non-compliance as specified in ALSC/NWPCA enforcement regulations.

8.10.3.15.3.2. At DOD site-certified WPM activities, the following procedures apply to audit failures or reported non-compliance:

8.10.3.15.3.2.1. First Audit Failure/Reported Non-Compliance. The WPM site auditor and/or custodian, after notification of the first audit failure/non-compliance, shall provide within 15 days written analysis of the problem and proposed resolution to the responsible MAJCOM WPM Program Manager and to the Air Force WPM Component Manager. The site shall be re-audited within 30 days to ensure process improvements have been implemented and are sufficient to resolve the discrepancy.

8.10.3.15.3.2.2. Second Audit Failure/Reported Non-Compliance. A second audit failure/non-compliance within the 30 days requires further involvement:

8.10.3.15.3.2.2.1. Provide within 15 days written analysis of the problem and proposed resolution to the MAJCOM WPM Program Manager, Air

Force WPM Component Manager and HAF/A4LM.

8.10.3.15.3.2.2.2. The MAJCOM WPM Program Manager or the Air Force WPM Component Manager shall re-audit the site within 60 days to ensure process improvements have been implemented to resolve the discrepancy.

8.10.3.15.3.2.2.3. Third Audit Failure/Reported Non-Compliance. A third audit failure/non-compliance within the 60 days requires greater involvement:

8.10.3.15.3.2.2.3.1. If the failure/non-compliance results from WPM documentation (records) maintenance or to contract for the delivery of the proper WPM, the DOD site certification shall be withdrawn. The facility shall contact ALSC to perform monthly commercial inspections, contract with a local ALSC operation, or ship materiel to another DOD self-certified site. All costs associated with actions resulting from a third failure shall be the responsibility of the facility.

8.10.3.15.3.2.2.3.2. If the failure/non-compliance is related to the shipment of defective packaging, the installation/shipper shall be responsible for repackaging costs (and associated demurrage). All installation personnel shall have their DOD site certifications removed and shall be required to successfully re-accomplish the online WPM certification training prior to reauthorization to apply the certification marks.

8.10.3.15.3.2.2.3.3. The site may reapply for DOD site certification after one (1) year. All wood packing and fabrication personnel shall be required to successfully re-accomplish the online WPM certification training for site re-certification.

8.10.3.16. WPM Training Requirements. Personnel involved in audit inspections, remediation and marking of WPM must successfully complete the DOD Self-Certification qualification training (initial) and refresher training every two years. DOD Self-Certification training will be accomplished via DOD WPM System at: https://www.icptarp.net/wpm/wpm_training.nsf . Additional information on the DOD certification training information is available by contacting (717) 605-2784. Only personnel who have successfully completed the above training may apply the above certification markings. Successfully completed training shall be documented and maintained in the employees training records.

8.10.4. Security Assistance such as Foreign Military Sales (FMS) and Military Assistance Program (MAP). Security Assistance items, including FMS, are especially susceptible to damage due to unknown and unfavorable transportation, climatic, and storage conditions. Provide military packing protection (Level A) when outdoor storage conditions are anticipated and military packing protection (Level B) when indoor storage conditions are anticipated, unless otherwise directed by the procuring country.

8.10.5. Parcel Post Shipments. Envelopes and tapes used to seal packages must be capable of absorbing a postmark.

8.10.6. Electrostatic Discharge Sensitive (ESDS) Items. Weapon systems are controlled by increasingly complex microcircuits composed of components that require ESD protection to prevent damage caused by transient electrical overstress. Never handle ESDS items, regardless of condition, without their protective packaging except at a grounded ESD workstation. T.O. 00-25-234, Section VII, Electrostatic Discharge Control, provides specific guidelines for protecting electrical and electronic parts, assemblies, and equipment. It also contains guidance on ESD protective workstations. SPIs specify packaging requirements for ESD depot reparables.

8.10.6.1. For "Black Box" items, follow the guidance outlined in T.O. 00-25-234. For complete system assemblies (black box LRU, SRU, Test & Repair Equipment- level), conductive caps/plugs serve as an electro-static shield against static fields or discharges to the item. ESD susceptibility stops when the level of assembly is such that a complete electro-static shield exists around the device. These complete system assemblies do not require ESD wraps/bags for intra-base transport between Maintenance and Deployment and Distribution. Connectors or plugs (power or data transfer) must be covered with conductive caps/plugs for any ESDS end item. The metal chassis or frame acts as a Faraday cage or electrostatic shield. Conductive caps or plugs shall be used to complete the Faraday cage. Without proper conductive caps or plugs, the connectors serve as an induction (pathway) in which ESD pulses can travel. T.O. 00-25-234, Table 7-3, lists various cap or plug sizes, conductive materials and substitutes.

8.10.6.2. ESD items shall be properly packaged and handled by personnel knowledgeable in ESD precautionary procedures.

8.10.6.3. In all cases, ESD items shall be properly packaged in ESD protective packaging to prevent damage during return to depot or TRC.

8.10.6.4. Use care in opening ESD items. ESD bags are usually constructed with enough extra material to allow for at least one additional heat seal, thereby facilitating re-use in the maintenance activity.

8.10.6.5. Identify ESD items by Type Cargo Code “3” on DD Form 1348-1A and by special interior and exterior markings. These markings may include the yellow sensitive-electronic-device caution label or symbol. You do not need to repackage ESD items packaged before 1 November 1983.

8.10.7. Industrial Plant Equipment (IPE).

8.10.7.1. All IPE shall be cleaned, dried, preserved and packaged in accordance with MIL-STD-107J, *Preparation and Handling of Industrial Plant Equipment (IPE) for Shipment and Storage*. Guidance for equipment disassembly, cleaning, weatherproofing, skidding, preservation, packing protection and approved methods for preparing Government-owned IPE for shipment and storage are outlined therein.

8.10.7.2. Use MIL-STD-107J in conjunction with MIL-HDBK-701, *Blocking, Bracing and Skidding of Industrial Plant Equipment for Shipment and Storage.* The use of DOD reusable skids in accordance with MIL-STD-701 is a cost savings effort by the Government. Direct any proposed deviation from the use of DOD reusable skids for equipment weighing 42,000 pounds or less to the Defense Supply Center Richmond, ATTN: DSCR-VBD, 8000 Jefferson Davis Highway, Richmond, VA. 23297-5610.

8.10.8. Protecting Metallurgical Failure Exhibits. DD Form 2332, *Product Quality Deficiency Report Exhibit*, must accompany such exhibits. Do not let the packaging and handling prevent accurate metallurgical failure analysis. These rules apply:

8.10.8.1. Do not clean or apply acid to the fracture except for exhibits shipped from overseas. Clean exhibits from overseas activities only when necessary to satisfy public health requirements. Take care to prevent damage to evidence during cleaning. Foreign products on the fracture may aid analysis.

8.10.8.2. Do not touch the fracture face with fingers, tools, or instruments.

8.10.8.3. Protect the fracture face from the environment, particularly where corrosion can occur. Do not apply preservatives to the fracture face; they could interfere with analysis.

8.10.8.4. Store them in a desiccated, watervapor proof bag, fabricated from MIL-PRF-131 barrier material or equivalent. Seal the bag airtight. Include only one item per watervaporproof bag.

8.10.8.5. If the exhibit is shipped intact rather than in parts, do not disassemble or otherwise compromise the exhibit unit. Ship the entire exhibit unit in the container.

8.10.8.6. If the item is bent or broken, use a shipping container large enough to prevent rearranging or disturbing the bent or broken area.

8.10.8.7. Pack items to prevent damage to the exhibit evidence during shipment. If you pack more than one exhibit in a single container, be sure to package exhibits separately and use cushioning or wrap to prevent contact between each exhibit.

NOTE: T.O. 00-35D-54, *USAF Deficiency Reporting and Investigating System*, contains further guidance on protecting metallurgical failure exhibits and marking exhibits for material deficiency reports.

8.10.9. War Reserve Materiel (WRM), Readiness Spares Package (RSP) and On-Board Spares (OBS):

8.10.9.1. Give WRM level A or B packing accordingly (see Attachment 3), unless otherwise specified by the IM or prime AFGLSC packaging office.

8.10.9.2. These requirements, or those specified by the IM or prime AFGLSC packaging office, apply even when the packaging and/or maintenance activities packs the items for deployment or mobility within kits or mobility bins (e.g. Cadillac bins). Internal packing of assets in SPI reusable containers must remain intact. Specifically, do not remove the assets from their prescribed SPI reusable containers. Stuffing assets in mobility bins without their SPI reusable containers (with only bubble-wrap cushioning) is a major contributing factor in subjecting these assets to damage from adverse shock and vibration. Bubble-wrap is authorized only for use as additional cushioning to fill void spaces inside the mobility bins.

8.10.9.3. Keep serviceable and/or depot reparable WRM, RSP, OBS or other critical spare assets in their prescribed SPI/Fast Packs to ensure protection during deployment/mobility and to provide packs for retrograde reparables from forward deployed locations. The prime AFGLSC packaging office will assist with proposed

reconfigured SPI pack inserts to accommodate OBS due to on-board aircraft space constraints.

8.10.9.4. Do not stock packaging materials as WRM, unless otherwise directed by Unit Type Codes (UTCs). However, ensure that spare reusable containers are available at forward deployed locations during follow-on RSP for retrograde Not Mission Capable Supply (NMCS)/MICAP mission support to the prime ALC depot or TRC.

8.10.9.5. OCONUS bases may maintain up to a 60-day level of bench stock of packaging materials, based on current usage.

8.10.9.6. CONUS bases must maintain at least a 30-day supply.

8.10.9.7. The MAJCOM may approve storage of additional materials at the base or within the region.

8.10.10. Uncrated Shipments. Crate items to facilitate handling and item protection. A qualified carrier certified to transport uncrated items may ship those uncrated large items that require special handling. Obtain lists of qualified carriers from Surface Deployment and Distribution Command (SDDC) area offices or on the SDDC website at: **https://mustang.eta.sddc.army.mil/ccp/jsp/ApprovedCarrierList.jsp**. For further guidance regarding route requests and requirements, contact SDDC Freight Routing Department at (757) 878-1800. You may load packaged items in a vehicle partly filled with uncrated items.

8.10.10.1. Criteria for Large Items. Activities may ship large uncrated items, unless otherwise specified by a SPI or palletized unit load marking drawings, and shall comply with the following criteria:

8.10.10.1.1. The cost of packaging and shipping by other means would cost more than shipping the item uncrated.

8.10.10.1.2. The item is capable of withstanding shipment uncrated. Parts that are highly susceptible to damage must be removed from the major component and packaged properly. Then firmly attach these parts to the unit being shipped before releasing it to the carrier.

8.10.10.1.3. Qualified carriers are available to handle the shipment.

8.10.10.1.4. The item does not have a security classification that requires packing or crating to prevent disclosure to unauthorized personnel.

8.10.10.1.5. The item is not hazardous cargo as classified by AFMAN 24-204_IP, the Department of Transportation (DOT) Title 49 (49 CFR), International Air Transport Association (IATA) Dangerous Goods Regulation, or other Federal regulatory policy.

8.10.10.1.6. SDDC approves and authorizes the shipment as required by DTR 4500.9-R.

8.10.11. Handling.

8.10.11.1. Opening and Unpacking. To optimize re-use, carefully open and unpack materiel to prevent damage to fiberboard containers and their components. Do not strip old tapes and labels from fiberboard containers; it can delaminate (peel the protective

layers off) the container and reduce the serviceable life. Prevent obliteration of stenciled information (e.g. SPI number, NSN, dimensions, POP markings, etc.) located on most containers. Carefully cut open the flaps by shallowly cutting along the tape line. Cut off loose ends of existing tape. Carefully remove all protruding nails, staples, metal strapping, and other sharp metal objects. Put all container components inside, or attach them to, the container so they do not get lost. Tape over the original tapes and place the new label over the old.

8.10.11.2. Closure, Reinforcement and Sealing. Closure, sealing and reinforcement for shipment and storage will be accomplished as required and specified by ASTM D5118 and PPP-B-1672, depending on the container type, levels of protection and preservation methods. The tape used for reinforcement and sealing shall be of the specification, type and size specified for each category and type of box. Adhesives will not be used to close Fast Packs or standard packs. Do not use staples or glue to make the final closure of Fast Packs and standard packs. Surfaces to which tape for closure is to be applied must be free of loose soil, oil, or grease. These surfaces should be wiped clean prior to application of tape. Guidelines are also specified in T.O. 00-85B-3.

8.10.12. Marking and Labeling.

8.10.12.1. MIL-STD-129, Marking for Shipment and Storage. This document establishes procedures for marking military supplies and equipment for shipment and storage. Specifications, T.O.s, drawings, and SPIs may also contain special marking requirements. All surfaces to be marked shall be in a condition so that markings remain permanent, legible, and non-fading. Old markings and labels not applicable to the shipment shall be obliterated (blank out, cover with paint, stencil ink, etc.). Do not obliterate United Nations specification packaging markings or Fast Pack and Standard Pack markings that identify the container IAW T.O. 00-85B-3. In all cases except those described in this section, comply with MIL-STD 129. Reference the Training Template on Container Reuse and Marking Obliteration found on the Packaging Community of Practice (CoP) website at: **https://spires.wpafb.af.mil/cfm/TrainingTemplateOnContainerReuse.doc**

8.10.12.2. Multipack Shipments. Mark all consolidated shipping containers "Multipack." Include level of packing, date of pack, and gross weight and cubic measurements instead of content and identification markings. MIL-STD-129 contains marking requirements for multipack shipments including those containing shelf-life or warranty items. Multipacks containing properly packaged ESD sensitive items do not require ESD markings on the exterior multipack container. If a consolidation container contains a unit container marked "FRAGILE," do not put "FRAGILE" labels on the consolidation container unless the gross weight of the consolidation container is 75 pounds (33.75 kg) or less.

8.10.12.3. Expedite Shipment Marking. The Air Force uses two codes to identify expedite shipments: Code 999 and NMCS. Code 999 shipments take precedence over all other shipments. While both codes can apply to a single shipment, do not apply NMCS markings if you use 999 markings.

8.10.12.4. Expedite Labels. Shipping documents are annotated if the shipments are a Mission Capable (MICAP) 999 or NMCS. The 999 and NMCS labels are commercially sourced and no longer available through GSA. Use the largest size that space permits.

Attach one label on the identification side next to the address label. Place another label on the opposite side of the container. Mark irregularly shaped units where shippers can easily see the markings. Apply as indicated in this paragraph for 999 shipments.

8.10.13. Project Code Markings. Shipping documents tell you if the item has a project code. Annotate the applicable project code number in the space provided for it on the MSL IAW MIL-STD-129 and AFMAN 23-110. When a project code is assigned or is specified in a solicitation or contract, project code labels shall be applied to exterior containers. The project code shall appear in the address and also on a white label having a disc of a highly contrasting color superimposed on it. Specific guidance on applied project code markings is found in MIL-STD-129, Paragraph 5.2.2.

8.10.14. Fragile Markings. When packaging conforms to specified Air Force packaging requirements, you do not need "fragile" markings unless prescribed by a SPI. When packaging does not completely conform to Air Force requirements for a specific item, the shipper must decide whether to use "fragile" markings.

8.10.15. Marking and Identifying Reusable Containers.

8.10.15.1. Mark the exterior of SPI packs and reusable contractor packs with "REUSABLE PACK" (except for Fast Packs, standard packs, and long-life FSC 8140 and 8145 containers).

8.10.15.2. Do not mark the Fast Pack containers with the complete Fast Pack SPI number. The Fast Pack code consists of the last three digits of the Fast Pack SPI number, beginning with an "X" (e.g. XE6). See PPP-B-1672 for additional Fast Pack marking guidance.

8.10.15.3. Standard packs do not need to be marked with "REUSABLE PACK" or with the standard pack SPI number.

8.10.15.4. Ensure that base logistics systems print the SPI number on the DD Form 1348-1A, which provides a convenient record for identifying the item to the SPI and for ensuring the accuracy of the SPI number on the shipping container.

8.10.16. Marking Component Parts of SPI Containers.

8.10.16.1. If local units fabricate SPI packs, mark the SPI number on the exterior of the container before shipment.

8.10.16.2. Keep together and mark with the SPI number the internal component parts of SPI containers that have complex configurations (like die-cuts or special purpose inserts) in the container.

8.10.16.3. Do not obliterate Performance Oriented Packaging (POP) markings from the Fast Pack containers.

8.10.16.4. Do not mark SPI numbers on Fast Packs and standard packs.

8.10.16.5. Do not mark SPI numbers on classified shipments. See Chapter 5 for NWRM shipments.

8.10.17. Marking Commercially Purchased Materiel Using the Government Purchase Card (GPC).

8.10.17.1. All OCONUS shipments (particularly into contingency areas), via aerial/water ports and DLA Containerization and Consolidation Points (CCP), must be packaged appropriately for overseas shipment and marked IAW MIL-STD-129.

8.10.17.1.1. Shipments must be clearly marked with the Ship To address (CCP address) and the Mark For address (the actual address of the OCONUS customer). Shipments must also have the Transportation Control Number (TCN), Required Delivery Date (RDD), Project (if any) and Transportation Priority (TP) clearly marked on the shipment. If shipment is moving via military airlift/sealift or CCP, purchasing unit must also provide a TAC to be included on the shipping label which will cover the cost of the transportation.

8.10.17.2. GPC holders are directed to contact their local TO for assistance.

8.10.18. Orientation Markings.

8.10.18.1. This End Up - Orientation Arrows . When a shipper must carry a package of restricted articles in an upright position and you must mark it to that effect, use Dangerous Goods label “This End Up” Orientation Arrows (Figure 8.3), to show how the package should be stowed. The label arrows must point up to indicate the top of the package.

Figure 8.3. This End Up - Orientation Arrows.

8.10.18.2. Marking TOPHEAVY Shipments.

8.10.18.2.1. To determine when containers or crates require top-heavy marking (in addition to the center of balance requirements of MIL-STD-129):

8.10.18.2.2. Locate the center of gravity (CG) of a uniformly distributed load. To determine the CG, locate the side with the smallest base dimension of either the width (w) or the length (l) of the crate (Figures 8.4 and 8.5). When the base dimensions of either "w" or "l" are equal (Figure 8.4), either side will work. On the chosen side, draw diagonal lines from opposite corners. The intersection of the diagonal lines is the CG of the crate.

8.10.18.2.3. Using the same base dimension used to find the CG, draw an equilateral triangle on the crate (Figures 8.4 and 8.5). If the CG is within the triangle (Figure 8.2), the container is within the safe limits for normal handling. If the CG is not within the triangle (Figure 8.5), the crate is unsafe for normal handling and should be marked "TOPHEAVY."

8.10.18.2.4. If the height of the crate is equal to three times the base, you must mark the crate "TOPHEAVY." In addition, TOPHEAVY marking is recommended any time a package height is more than 48” and the CG is higher than 24” or when the package falls over when tipped 22 degrees or less in any direction.

Figure 8.4. Uniform Load.

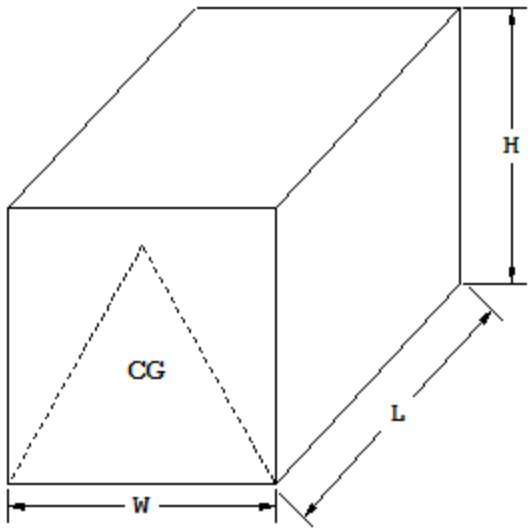

Figure 8.5. Topheavy Load.

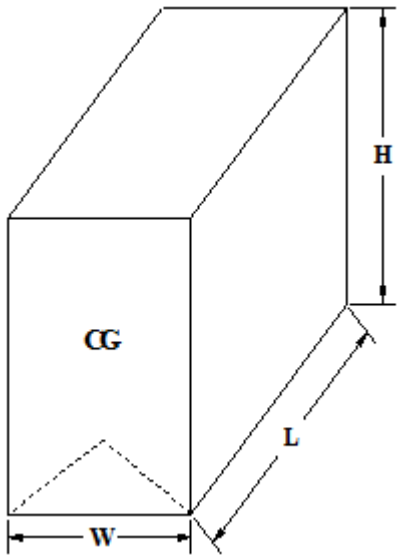

8.10.19. Forklift Entry. You must use a captive forklift entry on crates that are unsafe for normal handling even when they are marked "TOPHEAVY."

8.10.20. Unitization of Cargo**.** Unitization is the grouping of like or unlike items for shipment, kept together as a unit, until they are received by the user. Pack Air Force cargo into units (unitize) at the source of shipment when practical. Unitizing materiel provides greater efficiency and economy in handling, transporting and documenting cargo by reducing the number of containers that must be individually handled. Properly unitized loads reduce the incidents of damage, loss and pilferage. The unitization policies in this section do not apply to hazardous materials regulated by AFMAN 24-204_IP. Unitization is practiced by two basic methods: palletization and consolidation.

8.10.20.1. Palletized Loads**.** Unless otherwise specified, palletize materiel when:

8.10.20.1.1. Containers do not require skids.

8.10.20.1.2. Quantities to a destination exceed either a total of 250 pounds (112 kilograms (kg)) excluding the pallet, or a volume of 20 cubic feet (6 cubic meters).

8.10.20.1.3. Container size permits use of one of the pallet patterns of MIL-STD-147, *Palletized Unit Loads*.

8.10.20.1.4. Special instructions for specific commodities take precedence over MIL-STD-147.

8.10.20.1.5. Do not exceed the weight and dimensional limits of MIL-STD-147 on palletized loads.

8.10.20.1.6. Use the 40 by 48-inch (101.6 by 121.9 millimeter (mm)) pallet with a four-way forklift entry for ease of loading and in support of NATO forces and wherever full four-way forklift entry is required by conventional mobile materials handling equipment.

8.10.20.1.7. Keep the height of the vertical center of balance as close as possible to one-half the length of the pallet to obtain maximum use of the pallet with maximum stability for safe handling.

8.10.20.1.8. For loading 463L pallets, refer to AMCI 24-101, Vol. 11. Technical aspects of 463L pallets are referenced in T.O. 35D33-2-2-2, *Instructions with Parts Breakdown, 463L Air Cargo Pallets, Types HCU-12/E (Brownline Corporation).*

8.10.20.2. Container Consolidation. Consolidation is accomplished by placing the unit packages into a larger container. Consolidation containers may be constructed of fiberboard, paper overlaid veneer, plywood, or lumber. They may be demountable or non-demountable and are usually secured to a pallet or to a skidded base. Some consolidation containers are designed to be compatible with 463L System, while others may be used as inserts in transporters such as CONEX, MILVANS, or SEAVANS, or to be used as a separate shipping container. When practical and consistent with DOD Regulation 4500.9-R, consolidate containers for a single consignee overseas or, when advantageous, to several consignees within the CONUS. The consolidation container must adequately protect contents during shipment. Consolidation must not be used to prevent item packaging. To obtain maximum advantages of consolidation, units will:

8.10.20.2.1. Restrict total weight and the cubic measurements of the contents so they do not exceed the limits prescribed for the selected container.

8.10.20.2.2. Make sure that all of the items are packaged individually to meet the level of packaging required for the individual item. If a single line item is not assigned a SPI and no packaging data is available, then use the most appropriate cushioning and container to pack and protect the item.

8.10.20.2.3. Make sure to keep the center of gravity low by placing heavy, dense items in the bottom of the container, braced and blocked to prevent shifting. Fill voids to prevent shifting of contents. Use reclaimed cushioning or other suitable material that has no other reuse value. If clean scrap is not available, use fill.

8.10.20.2.4. Assemble loose items or small unit packs of the same stock number into a single unit by bagging, bundling, tying, wrapping, or putting them into a carton, and identifying and marking the contents according to MIL-STD-129 before placing them in the container.

8.10.20.2.5. Facilitate mechanical handling by placing skids on containers that have a gross weight greater than 250 pounds (113.40 kg), or greater than 100 pounds (45.36 kg) if the dimensions exceed 48" x 20" (121.92 cm x 50.80 cm). Use a pallet base on consolidation containers that have a gross weight greater than 250 pounds (113.40 kg) or a gross cube greater than 20 cubic feet (0.57 cubic meters).

8.10.20.2.6. Make sure Tri-walls and other bulk shipments are placed on skids and banded, as appropriate. Banding should be such that a forklift is able to get under and pick up from all sides of the container.

8.10.20.2.7. Pack serviceable and unserviceable materiel separately.

8.10.21. Preservation and Levels of Packing for Unitized Loads.

8.10.21.1. Levels of Packing for Palletized Units Loads**.** You must sheath palletized unit loads containing Level B or commercial packs for delivery overseas. Supplement the fiberboard sheathing with a waterproof barrier unless known favorable storage and handling conditions en route to the final destination indicate you do not need to. Do not sheath palletized unit loads containing Level A packs destined for overseas solely for packaging protection. Loads destined for CONUS installations do not require sheathing (unless shipping tire/wheel assemblies) regardless of packing level.

8.10.22. Preservation and Levels of Packing for Containerized Unit Loads. After considering the total logistics pipeline, preservation and levels of packing may be reduced when exterior container dimensions permit shipment in CONEXS, SEAVANS or MILVANS. If container service cannot be used, then allow the shipper at origin or the military ocean terminals to overpack exterior containers. If break-bulk and surface transportation is required for delivery to the user, or if storage time, storage conditions, or mode of transportation is unknown, then a higher level of packing must be used.

CAUTION: Containerized hazardous materials are not air-eligible cargo. See AFMAN 24-204_IP and 49 CFR.

8.11. Using Preservative Treated Wood. Preservative treated (pressure treated) wood does not meet the ISPM 15 standard specified in paragraph 8.10.3, unless the wood was heat treated and stamped HT prior to preservative treatment.

8.11.1. Generally, treat lumber and plywood with a wood preservative only when a favorable tradeoff in container life expectancy can justify its use and you expect to store the container in the open for greater than:

8.11.1.1. Twelve months in tropical or subtropical regions (including the CONUS Gulf states).

8.11.1.2. Twenty-four months in temperate climates with normal rainfall (including CONUS Midwestern, Eastern, and Northwestern states).

8.11.1.3. Thirty-six months in arid areas (including CONUS Southwestern states).

8.11.2. Preserve lumber and plywood used to manufacture or fabricate containers and container accessories (skids, pallets, and rubbing strips) as specified in A-A-59276. Use only Composition C and D of TT-W-572 and copper naphthenate (CuN) or copper-8-quinolinolate (Cu-8) as wood preservatives. Consider using preservative-treated wood rather than untreated wood for the following containers and accessories:

8.11.2.1. Reusable containers of wood construction or containing wood members.

8.11.2.2. External wood members of metal, plastic, and fiberglass containers.

8.11.2.3. Wood members of open crates, including blocking, bracing, and mounting devices.

8.11.2.4. Wood members of wood and plywood containers and sheath crates.

8.11.2.5. Skids, pallets, and rubbing strips, even when used with nonpressure-treated containers.

8.11.3. When cutting preservative treated wood, use a bioenvironmentally approved ventilation system to prevent irritation from the sawdust.

8.11.4. Insure that personnel handling wood products treated with Pentachlorophenol (penta) and showing signs of penta crystals use nitrile rubber or polyvinyl chloride gloves and chemical goggles.

8.11.4.1. If personnel discover that penta treated items like boxes, pallets, and crates have crystals or blooms, remove, repackage, and return the contents to service using noncontaminated materials. Overpack the contaminated material in metal drums or wrap it in heavy plastic and report it as hazardous waste.

8.11.5. Do not ship or store foodstuffs in preservative-treated wooden containers.

8.11.6. NOTE: Wood products preserved with Composition C or D or TT-W-572 or CuN or Cu-8 do not have national stock numbers (NSNs). Order treated lumber by using the NSN for untreated wood with an added stipulation on the purchase order. For example, a purchase order requesting treated 2 by 4 lumber, must begin with the NSN for untreated 2 by 4 lumber, (5510-00-220-6194). Then the stipulation must be added that the wood is to be used under moderate weather conditions and is to be treated as specified in A-A-59276, using Composition C or D of TT-W-572 or CuN or Cu-8. Include such data in applicable TOs and SPIs if you are specifying treated lumber.

Chapter 9

AIR FORCE REUSABLE CONTAINER PROGRAM

9.1. General Information.

9.1.1. The Air Force Reusable Container Program is an efficient and effective program to satisfy the most demanding packaging requirements. This program is designed to pay minimum cost in packaging and maintaining high levels of protection for assets during storage or shipment. Savings in logistics costs are being realized by this program. Reusable containers provide superior packaging protection and performance of critical spare parts and increase the reliability of weapons systems. By taking maximum advantage of recovering and utilizing reusable containers, packaging costs are reduced, new acquisitions of expensive containers are minimized; materiel waste stream (disposal of cushioning) is reduced; war-winning capabilities are enhanced through the continuous flow of serviceable weapon system specific parts. Lost or missing containers slow down the flow of aircraft parts.

9.1.2. Reusable containers are a shipping and storage container that can be reused and which can be repaired or retrofitted to prolong its serviceable life. Reusable containers can be modified for shipment of like items other than that for which it was originally intended. They must maintain a high rate of re-use due to the nature and value of these items and the Air Force's diverse logistical requirements. Many items can be reused after undergoing recalibration, repair, or retrofitting, but cannot be made serviceable by the using base. These items must be returned to the prime ALC depot or TRC. Such items may include reparable and technical order time change items. Moreover, many of these items are assigned reusable containers. Items that are ERRC "T" coded as depot reparable shall have a SPI, whether a drawing, Fast Pack or Standard Pack. Other selected items that are not depot reparable can also be covered by SPIs based on item characteristics. Although Fast Packs and Standard Packs are a type of SPI, Fast Packs and Standard Packs shall not be depicted in a SPI drawing. Special Packaging Instruction Retrieval & Exchange System (SPIRES) (**https://spires.wpafb.af.mil**/), provides the capability to cross-level AF and Contractor Supported Weapon System (CSWS) NSN to SPI data (e.g. SPI drawings, Fast Packs and standard packs). Additional guidance on SPIRES is found in paragraph 9.6.11. Reusable Container Worldwide Warehouse (RECON) (**https://recon.wpafb.af.mil**/), is a tool that cross-levels excess reusable containers and/or packaging materiel from CONUS/OCONUS bases, provides worldwide visibility and matches warfighters' reusable container needs.

9.1.3. Intermodal containers are not covered under this program. Additional guidance on intermodal containers can be found in Chapter 14.

9.2. Serviceable Reusable Containers. To be serviceable, reusable containers must meet all of the following requirements:

9.2.1. Protect serviceable items against natural and induced environments and physical damage.

9.2.2. Protect unserviceable items against further deterioration during return to the prime ALC depot or TRC.

9.2.3. Be opened and closed without impairing the container's ability to provide its original level of protection.

9.2.4. Have all its components and in good repair.

9.2.5. Endure the shipping, handling and storage environment for the number of trips required to yield the lowest total packaging, maintenance, storage and transportation costs for the expected lifetime of the item it protects.

9.2.6. Personnel who handle, package, or store reusable containers must perform visual examination for configuration of external packaging.

9.2.6.1. Reusable containers used more than once shall be in such condition, including closure devices, cushioning materials and markings, that conform in all respects to the prescribed requirements of applicable directives.

9.2.6.2. Before reuse, each reusable container shall be visually examined and shall not be reused unless free from damage (which reduces structural integrity) and excessive marking/labeling (which imposes risk for misidentification of assets).

9.2.6.3. Containers shall not have any separation at top or bottom seams. Metal lever locking rings shall not show significant rusting/corrosion nor have critical dents/damages that would affect structural integrity. They must fit snug around the container and not be loose when closed. Lids shall be flat, with smooth edges that fit completely over the upper edge of the container. For existing containers, small dents and rust on the lever locking rings and/or lids are acceptable for shipment to meet mission needs, provided the lids will close completely with the lever locking rings to secure a strong tight fitting integration with the sidewalls.

9.2.6.4. Chimes (top or bottom rings) shall not show significant rust that affect structural integrity. They must be unbent and firmly connected to, with no separation from, the container walls. Container walls shall not show any signs of collapse, crushing or weakening over the chimes.

9.2.6.5. Container exterior surface shall not be unglued, have tears/cuts or significant peeling to the moisture laminate (delaminated), or show any signs of material separation, provided there is no risk of structural integrity or separation of component parts. Container surface shall not have any swollen or soft areas where exposure to moisture has weakened the walls. Containers shall not be faded or show discoloration that may indicate exposure to liquids or sunlight that has created structural weakening. Containers shall not show any signs of instability, unsteadiness or wobbling.

9.2.6.6. If after using the above visual examination criteria, or if the reusability/serviceability of a particular container is in question, please follow the procedures in paragraph 9.6.13. herein. For additional guidance on reuse of different types of containers, reference the Training Template on Container Reuse and Marking Obliteration found on the Packaging Community of Practice (CoP) website at: **https://spires.wpafb.af.mil/cfm/TrainingTemplateOnContainerReuse.doc**

9.3. Categories of Reusable Containers. Reusable containers fall into four categories, depending on the durability of the exterior shipping container and complexity of the design:

9.3.1. Long life containers. Effective for 100 trips minimum. A shipping container that can be used repeatedly and whose serviceability can be expected to equal the serviceability of the item it is designed to protect. These containers may be refurbished by appropriate maintenance practices to their original condition and re-used.

NOTE: Slotted angle crates, covered by NSNs in Federal Supply Classifications (FSC) 8140 and 8145, are long life containers. Slotted angle containers can be constructed and repaired at base level.

9.3.2. Short life containers. Effective for 10 trips minimum. A shipping container that can be re-used for a limited number of times. The container is usually made of wood, plywood, fiberboard or similar material that has limited serviceability.

9.3.3. Multi-application containers. Multi-application containers are designed to protect a variety of components within a given fragility and size range. All multi-application containers are assigned a National Stock Number (NSN). A multi-application container can be either short life or long life. They can be manufactured in a similar manner to that used for specialized containers or in accordance with applicable military/federal specifications. Short life multi-application containers include Fast Packs, consisting of a family of standard size cushioned fiberboard shipping containers. Short life multi-application containers are designated as Types I thru IV in MIL-STD-2073-1. Long life multi-application containers are made of rugged plastic containing internal cushioning pads or permanent shock mitigation systems (e.g. shear mounts, steel coils and springs) and designed to protect reparable components during forward and retrograde movements within the Defense Transportation System (DTS). Long life multi-application containers are designated as Types VI thru X in MIL-STD-2073-1.

9.3.4. Specialized Containers**.** Specialized containers are generally long life and are uniquely configured to protect a specific item, or limited variety of items during handling, shipping and storage or to protect personnel and equipment from hazardous contents. These containers are made of metal (e.g. extruded aluminum or steel), fiberglass, plastic, or other synthetic materials that are fabricated and produced by industrial equipment according to engineering specifications. Containers of this type incorporate many special features (e.g. energy absorbing systems, temperature control systems and permanent shock mitigation systems, etc.). Engineering drawings define form, fit, function, materials, tolerances and fabrication techniques. Internal fixtures or other fitments within result from original design or redesign modifications to meet specific weapon systems applications.

9.4. Types of SPI Containers. There are three types of SPI containers for Air Force depot or TRC reparables, serviceables and other selected items:

9.4.1. Fast Packs. Fast Pack containers are a complete shipping and storage system that integrates interior cushioning material with the exterior container. Fast Packs are designed for recovery and re-use. A key advantage of Fast Packs is versatility. About ninety (90) percent of the items assigned to Fast Packs are either in the slide or star type pack. The versatility of Fast Packs is evident when over thirty one thousand (31,000) line items can be packed in four (4) sizes of Type II slide packs. Complete details for the construction and sizes are outlined in PPP-B-1672, *Box, Shipping, Reusable with Cushioning*. T.O. 00-85B-3, *How to Package Air Force Spares*, describes the Fast Pack SPI numbering system and is used by bases in selecting the proper Fast Pack for shipment of items not covered by a SPI.

Additional detailed information regarding weight limits and fragility range of items applicable to these packs may be found in MIL-STD-2073-1. Fast Packs consist of four types. These four container types are:

9.4.1.1. Type I (Vertical Star Pack). Consists of a polyurethane foam cushion insert with a die-cut, star shaped, vertical cavity and top and bottom pads of the same material assembled in the container. Type I is used for packaging fragile items, either rectangular or cylindrical in shape, such as meters, gauges and instruments (e.g. air speed indicators). Items packaged in this star pack type are inserted into the cavity from the top of the container prior to placing the top pad in place.

9.4.1.1.1. Style A – Regular slotted carton (RSC)

9.4.1.1.2. Style B – Double cover container (DBLCC)

9.4.1.1.3. Style C – Modified double cover container (Mod DBLCC)

9.4.1.2. Type II (Modified Triple Slide (Convoluted Foam) Folding Pack). Consists of a convoluted polyurethane foam cushion bonded to container board. This assembly is subsequently folded up to become the slide of a modified triple slide box. The cushioning provides maximum protection against shock, while holding the item in place by pre-compression of the convoluted tips. Type II is used for circuit boards, electronic modules glass envelope electronic tubes. It is also used for a variety of other items whose depth does not exceed the limits of the size of the containers.

9.4.1.3. Type III (Full Telescoping Encapsulated Pack). Consists of a telescoping container with bonded convoluted (some end and side pads are flat sheet stock) polyurethane foam cushioning which forms an oblong cavity. Type III is used to pack black-box equipment such as receiver-transmitters, amplifiers, power supply units and electronic indicators.

9.4.1.4. Type IV (Double Cover Horizontal Star Pack). Consists of a two piece (top and bottom) polyurethane foam insert, which forms a star shaped cavity when the two pieces are mated in conjunction with end pads of flat sheet stock. The insert components and end pads are bonded in place in a half telescoping container fabricated in accordance with ASTM-D5118, Type CF, Style DBLCC. The cushioning insert is similar to the Type I star pack insert except that it is cut along (horizontal) its greatest dimensional length to facilitate insertion (loading) and extraction of relatively long, rectangular or cylindrical items such as control generators, voltage regulators, volt-meters, electronic receivers, protection panels, transmitters, transformers, couplers and amplifiers.

9.4.2. Standard Packs. Standard packs are ASTM D5118, Type RSC, Class Weather-Resistant fiberboard containers. Standard packs, for which the packaging components (including the shipping container) are standardized as to materiel and size. Appropriate items require less cushioning protection than Fast Pack items. The cushioning in a standard pack is not bonded to the container walls and varies according to the instruction code in the standard pack SPI number. Because many different items are assigned to each standard pack, the reusability is increased. An example of a standard pack number is F000004D38. Refer to T.O. 00-85B-3 for complete details on defining standard pack numbering positions which specifies packaging data (e.g. preservation code, wrap, barrier and cushioning needed and container size code to protect the items).

9.4.3. Containers requiring SPI drawings. SPI drawings are detailed packaging instructions, usually packaging data with 3-D drawing (graphic) illustration, used to construct packages/containers for items requiring special preservation, packing and protection. A SPI drawing generally depicts details for special blocking, bracing, cushioning, shock mounts, tie-down devices and positioning of the item in the package/container. Additionally, a SPI describes the bill of materials, container system illustrations, preservation and packaging requirements for one item or a limited group of items of similar form, fit and function. A SPI will be developed IAW MIL-STD-2073-1, paragraph E.5 Additional guidance on SPIs is found in MIL-STD-2073-1. SPIRES (**https://spires.wpafb.af.mil**/) provides bases and users the capability to retrieve (download) SPI drawings assigned to NSNs. Additional guidance on SPIRES is found in paragraph 9.6.11.

9.4.3.1. SPI numbers follow a DOD standard numbering system with Service Designator + National Item Identification Number (NIIN) (e.g. F000519053).

9.4.3.2. Refer to the SPI drawing to manufacture or fabricate the container and for packing the item.

9.5. Packaging Engineering and Repair Capabilities.

9.5.1. 403 SCMS (AFPTEF) and 678 ARSS (Eglin AFB) have full container design, build, engineering and repair capabilities to support long life, short life, multi-application and specialized containers.

9.5.2. 403 SCMS (AFPTEF), upon request on a fee-for-service basis, will provide container engineering design, modification, test and evaluation identified by units to accomplish mission requirements. Additional AFPTEF guidance is found in Chapter 10.

9.5.3. Main Operating Bases (MOB) which have full maintenance capability may repair specialized long life containers and control them as an accountable item of supply.

9.5.4. Base TOs generally do not have the resources (facilities, capability and materials) to design, build and repair long life and specialized containers. 9.5.5. Base TOs usually have the materials and capability to repair or refurbish multi-application short life containers (Fast Packs). Fast Packs may be refurbished by replacing serviceable parts. For example, use serviceable cushioning inserts from worn-out Fast Packs in other packs that need them.

9.6. Controlling Reusable Containers.

9.6.1. AFMAN 23-110, volume 1, part 1, chapter 10, section W, *Container Management*, assigns engineering responsibility to the using systems manager (SM), or the end-article IM and prescribes procedures for stock listing, managing, controlling and returning containers to supply.

9.6.2. AFMAN 23-110, volume I, part two, chapter 2, identifies management responsibilities. For items without an assigned IM, contact the AFGLSC, Product Center, or TRC in your geographical area.

9.6.3. Specialized and multi-application long life containers are subject to AFMAN 23-110 management, accountability and control procedures.

9.6.4. Short life and multi-application short life containers are not subject to AFMAN 23-110 management, accountability and control procedures once issued for use.

9.6.5. Stock Listing Short Life and Multi-Application Containers. Short life and multi-application containers are stock listed for central buying and stocking by GSA (see T.O. 00-85B-3). The prime AFGLSC packaging office works with the IM (or appropriate SM) to begin stock listing of these containers in FSC 8110 and 8115 when all these conditions apply:

9.6.5.1. The volume of usage makes it economical.

9.6.5.2. A continuing requirement exists.

9.6.5.3. The pack has multiple applications (as in Fast Packs discussed in TO 00-85B-3).

9.6.6. Ogden AFGLSC has prime class management responsibilities for FSC 8140 specialized and multi-application long life containers. Warner Robins AFGLSC has prime class management responsibilities for FSC 8145 specialized and multi-application long life containers.

9.6.7. The acquiring activity oversees testing, engineering, and renovating for surplus FSC 8140 and 8145 containers acquired through the CDRS.

9.6.8. The prime AFGLSC packaging office does not purchase, repair, or re-engineer FSC 8140 and 8145 surplus reusable containers transferred to other activities.

9.6.9. Active reusable containers include all containers for which an immediate or projected need exists.

9.6.9.1. When active reusable SPI containers for most depot reparable items are empty, then recover and re-use them within the reusable container program.

9.6.9.2. Some specialized long-life containers, munitions containers and engine containers will be turned-in to LRS Materiel Management Flight or accounted for in munitions and engine accounts. Containers managed within the reusable container program are not accounted for in special accounts or LRS Materiel Management Flight. They are considered a part of, and identified to, the item packed inside during shipment and storage. Munitions containers with budget code “H,” FSC code 8140 and ERRC XD2 will be managed by the munitions community in CAS. Excess munitions reusable containers may be dispositioned for redistribution in RECON.

9.6.10. Specialized Containers Not-In-Use. Return FSC 8140 and 8145 specialized containers to LRS Materiel Management Flight accountability when any of these conditions applies:

9.6.10.1. Containers are not in use.

9.6.10.2. An immediate or projected need cannot be identified.

9.6.10.3. Containers are not managed in separate accounts (such as engines).

9.6.10.4. When using or packaging activities turn-in unused specialized containers to TO, the TO reports them to the IM or SM as available for redistribution. The IM reports them to 678 ARSS Eglin CDRS office for redistribution.

9.6.11. Identifying, Retrieving and Exchanging SPIs.

9.6.11.1. Special Packaging Instructions Retrieval & Exchange System (SPIRES). SPIRES is used worldwide by AF units of varying types with varying missions. Units

can retrieve AF and CSWS managed weapon system specific SPIs 24x7 for preparing materiel for shipment or storage by accessing SPIRES at **https://spires.wpafb.af.mil**.

9.6.11.2. SPIRES shall be used as the AF centralized electronic library for AF managed and AF Contractor Supported Weapon System (CSWS) Inventory Control Points (ICPs) weapon system specific SPIs.

9.6.11.3. The prime AFGLSC packaging office archives SPI drawings. As required, hard copies of SPIs are obtained from the prime AFGLSC packaging office when unavailable in SPIRES or if the internet is inaccessible. In addition, contact the prime AFGLSC packaging office if there are any specific questions about item(s) characteristics (e.g. changes in item dimensions, fragility, etc.) and their assigned SPIs or there are any SPI errors.

9.6.11.4. Weapon system specific SPIs which are commonly used may be locally maintained for mission support, mobility, contingency planning and operational non-availability of computer resources (downtime). SPIs are detailed packaging instructions and are not considered as technical data extracts. Performing SPI reconciliation is no longer required.

9.6.11.5. The prime AFGLSC packaging office SPI developers/illustrators and CSWS Inventory Control Points (ICP) shall exchange (upload) SPIs in SPIRES. Copies of SPIs can be exchanged in AutoCad DWG, Adobe Acrobat PDF and Microsoft Word DOC (image) formats. SPIs are retrieved and viewed by the warfighters in Adobe Acrobat PDF and Microsoft Word DOC format. SPIs can be queried by many different attributes (e.g. SPI No., NSN, FSC, NIIN, MMAC and SOS).

9.6.11.6. The SPIRES database stores and displays information from the depot D035T (Packaging, Transportation and Regulated Material) item records along with SPI attributes exchanged by the prime AFGLSC packaging office developers/illustrators who draw up the SPIs. This data system interface process enables any discrepancies or data inconsistencies to be flagged for resolution by the prime AFGLSC packaging office.

9.6.11.7. Jet and reciprocating aircraft engines and certain munitions, are exceptions to the SPI system. T.O. 00-85-20, *Engine Shipping Instructions*, identifies containers for engines.

9.6.11.8. The Standard Base Supply System (SBSS) stores the SPI number as part of the item record, and prints them in-the-clear on off-base issue, due-out release, and shipment documents. SBSS receives the SPI number through the Stock Number User Directory (SNUD) and depot D035T system interface.

9.6.11.9. The SBSS computer will store and print SPI numbers and other packaging instructions in "Freight Classification Nomenclature" block of the DD Form 1348-1A. These entries will be followed by the Routing Identifier Code (RIC) of the prime AFGLSC packaging office managing the SPI. The SBSS provides the following SPI information:

9.6.11.9.1. SPI number. Ten-alphanumeric positions followed by the RIC. For example, SPI F003036728 FHZ.

9.6.11.9.2. Fast Pack SPI number. Ten alphanumeric positions. For example, the preservation and pack code (the third from last position) will always be an "X" preceded by the preservation code and five zeros: F000004XC1 (RIC).

9.6.11.9.3. Standard pack SPI number. Ten alphanumeric positions. For example, the preservation code, simple instruction code, and container size code preceded by five zeros: F000004C01 (RIC).

9.6.12. Requesting SPI Waiver Authority to Deviate. While the prime AFGLSC packaging office strives to minimize deviations, SPI waivers are sometimes necessary. This flexibility is required to accomplish mission objectives. Requests for SPI waiver authority to deviate are processed by the prime AFGLSC packaging office if no SPI is available to accomplish immediate mission support. A waiver authority number to deviate and applicable instructions will be provided. Mark the waiver number on the lower right hand portion of the identification side of the container(s) prior to movement and annotate same on the shipping document. Follow paragraph 9.6.12.1. information to provide when requesting SPI waiver.

9.6.12.1. When requesting SPI waivers the following information shall be provided to the prime AFGLSC packaging specialist:

9.6.12.1.1. TCN

9.6.12.1.2. NSN

9.6.12.1.3. Nomenclature

9.6.12.1.4. Quantity

9.6.12.1.5. SPI Number

9.6.12.1.6. Condition of Materiel

9.6.12.1.7. Justification for waiver

9.6.12.1.8. Replacement container

9.6.12.1.9. Requester email and phone number.

9.6.12.2. Routing Identifier Codes (RIC), mailing and message addresses for requesting SPI waiver authority to deviate are as follows:

RIC	Mailing, DSN, and Internet Address
FGZ	418 SCMS/GULA (AFGLSC) 7973 Utility Drive Building 1135 HILL AFB UT 84056-5306 DSN 777-4495
FHZ	420 SCMS/GUMA (AFGLSC) 7851 Arnold Street, Rm 102 TINKER AFB OK 73145-8912 DSN 884-2798

FLZ 406 SCMS/GUMA (AFGLSC)
380 Richard Ray Blvd, Suite 104
ROBINS AFB, GA 31098-1638
DSN 468-2771

9.6.13. Obtaining Assistance When No SPI Container Is Available. If a SPI container cannot be fabricated at the base or a SPI container is not available (e.g. new items, lost, damaged or destroyed containers and Credit Due-In From Maintenance (DIFM)), take the following actions in order of precedence as listed below in paragraphs 9.6.13.1 through 9.6.13.4 :

9.6.13.1. Scope RECON for SPI container availability and acquire the SPI container as a lateral support asset from bases within the same command or the same overseas theater.

9.6.13.2. Request SPI waiver authority to deviate from the prime AFGLSC packaging office authorizing the use of a suitable replacement or alternate pack. Alternate packs may be authorized to meet shipping deadlines. Provide the prime AFGLSC packaging office with item and packing details for waiver applicability. A waiver authority number to deviate and applicable instructions will be provided.

9.6.13.3. Purchase locally the services and/or materials to fabricate the required approved SPI container. Use AF Form 451 when fabricating SPI packs, as outlined in Attachment 5. Organizational flights/units requiring packaging services must complete an AF Form 451. Units requiring SPI container fabrication, construction, repair or packaging services beyond the capability of the base will provide an AF Form 406, Miscellaneous Obligation Reimbursement Document (MORD), AF Form 616, Fund Cite Authorization, DD Form 448, Military Interdepartmental Purchase Request (MIPR) and/or a Government Purchase Card account to cover the charges associated with the procurement of the packaging services. The UCMs are the only individuals authorized to sign AF Form 451.

9.6.13.4. If the SPI container cannot be laterally supported or if there is no local packaging capability, then contact the prime AFGLSC packaging office above or TRC and request lateral support fabrication for the necessary SPI container(s). Use AF Form 451 when requesting packaging services.

9.6.13.5. For a long life or stock listed container, submit a requisition, through TO channels. Include the following information:

9.6.13.5.1. SPI Number

9.6.13.5.2. Quantity

9.6.13.5.3. National Stock Number

9.6.13.5.4. Ship-To Address

9.6.13.5.5. Fund Cite

9.6.13.5.6. Intended Use (shipment or storage)

9.6.13.5.7. Point of Contact, (include office symbol and phone number)

9.6.13.5.8. Squadron level authorizing signature

9.6.13.5.9. Any other applicable information

9.6.13.6. For items issued under the credit DIFM concept, where the reparable item is turned in to supply before the serviceable item is issued, the AF Form 451 must have "Credit DIFM – No Reusable Container Issued/Available." Supply will record on the shipping document "Credit DIFM - No Reusable Container Issued/Available." Delays can be avoided if maintenance units will ensure that the specified container is available.

9.6.13.7. For SPI containers without stock numbers, contact the prime AFGLSC packaging office.

9.6.13.8. For SPI containers that are Contractor Supported Weapon System (CSWS) managed, contact the applicable contractor source of supply for disposition instructions.

9.6.13.9. The requesting activity is responsible for all materials and transportation costs for fabricated containers and/or the total contract cost associated with their fabrication.

9.7. Excess Reusable Containers for Redistribution. When an activity generates a local excess over current or projected requirements, identify, segregate and inspect the condition of the containers. Additional details are as follows:

9.7.1. Excess Specialized Containers.

9.7.1.1. Turn in those containers traced to a valid NSN to engine or munition accounts, as appropriate, for redistribution action. Redistribute containers that are separately accounted for only at the disposition of the IM.

9.7.1.2. Attempt to cross-level trace to an NSN or SPI number any container not cross referenced to an NSN. You may request assistance from base TO, the prime AFGLSC packaging office or Container Design & Retrieval System (CDRS) office.

9.7.1.3. TO may request assistance from the prime AFGLSC packaging office responsible for the SPI when redistributing specialized containers that have not been separately accounted for.

9.7.1.4. Because these containers generally are in short supply and may be needed for packing other items on the SPI, the TO will identify these containers in CDRS and redistribute directly to other Air Force units needing them.

9.7.1.5. Contact the IM and request instructions. If the IM does not need the containers for any purpose, contact the prime AFGLSC packaging office or 678 ARSS CDRS office to find a use for the containers. The prime AFGLSC packaging office or 678 ARSS CDRS office may have disposition instruction. The CDRS database is populated with most of the specialized/engineered FSC 8140 and 8145 shipping and storage containers from the FEDLOG system. If the containers are high quality containers with high value for future applications, the 678 ARSS CDRS office may request the containers be sent to their station for storage. The 678 ARSS CDRS office may look for storage options while looking for a using customer for the containers.

9.7.1.6. Do not transfer specialized or multi-application long life containers to the DRMS unless directed in writing by the IM. As a last resort, after exhausting all available means (CDRS, MAJCOM disposition requests, lateral support) to redistribute

these containers to other Air Force units and written IM disposition instructions, then the containers can be turned-in to DRMS for recycling and/or resale.

9.7.1.7. The requesting unit is responsible for all transportation (shipping and handling) costs associated with sending the reusable containers to a storage activity.

9.7.2. Excess Long Life, Short Life and Multi-Application Containers (Non-Specialized). Use RECON to report excess serviceable non-specialized reusable containers (including containers for assets no longer on-hand) when the quantity or economic value justifies the cost of redistributing them. For unserviceable containers that are beyond economical repair, DRMS resell of non-usable excess for recycling is the preferred method of disposal.

9.7.2.1. Redistribution of RECON containers may be funded by AF Working Capital Fund (AFWCF) or unit funds. To determine whether or not a container qualifies as AFWCF, access the Tracker system, Logistics Data Queries, and use the NIIN/TAC query. Refer to the AF cargo funding memorandums (see Chapter 7) for a table of AFWCF TACs to use (based on budget code). When using an AFWCF TAC, ensure the NSN is included on the shipping document, otherwise payment on the TAC will be denied. Some of the reusable containers maintained in SPIRES (FSC 8115, 8135, 8145 and 9330 materiel) are non-AFWCF, and will reflect an alpha budget code or no budget code at all. These shall be funded by the unit's local O&M funds. For non-RECON supported disposition requests, the requesting activity is responsible for all transportation (shipping and handling) costs associated with container redistribution.

9.7.2.2. Deliver SPI packs and wood containers to the storage site in a setup condition; deliver Tri-wall and fiberboard boxes knocked-down.

9.7.3. Excess Consolidation Containers.

9.7.3.1. Bundle excess used consolidation containers in serviceable condition and report them in RECON for disposition and/or lateral support. Return them to the nearest prime AFGLSC packaging office, Air Force unit, or other service activities with a valid need by opportune airlift or other low-cost transportation.

9.7.3.2. Flatten disposal containers that are not recovered before they are placed in refuse receptacles or pickup sites.

9.7.4. Excess Consumable Packs and Packing Materials.

9.7.4.1. Recover and segregate by class and grade all excess reusable packs and packing materials (e.g. polyurethane foam cushioning) used to ship consumable items. Ensure personnel place packs and packing materials in designated recycling receptacles for re-use.

9.7.4.2. Use RECON to report excess packing materials when the quantity or economic value justifies the cost of redistribution.

9.7.5. Items Inside Recovered Containers.

9.7.5.1. Be sure that containers are empty before you redistribute, recycle or dispose of them.

9.7.5.2. Return items found in recovered containers to the accountable unit. If the item or unit cannot be identified from the container, turn-in the item to Materiel Management or Flight Service Center as Found On Base (FOB).

9.8. Selecting and Designing Specialized Long life Containers. These procedures shall be followed when selecting and designing long life containers:

9.8.1. The AFPTEF shall review and approve any specifications and statements of objectives/statements of work before you procure new long life container designs. Utilize the AFPTEF. Activities shall consider the in-house design, prototype, test and evaluation capabilities of the AFPTEF before soliciting/contracting such work out. Additional details are contained in Chapter 15 herein.

9.8.2. Use the CDRS to determine if a design already exists to satisfy the mission support requirements. MIL-STD-2073-1 contains instructions on how to use CDRS.

9.8.2.1. After selecting a standardized off-the-shelf container or approving a newly designed long life container, the buying activity must send the design data to: 678 ARSS CDRS Office, Building 615, Apalachicola Rd, , Eglin AFB, FL 32542-6845. DSN 875-3637, Commercial (850) 883-3637. Fax: 850-882-9381. Follow the procedures in MIL-STD-2073-1 for submitting new designs to CDRS.

9.8.3. Contact the prime AFGLSC packaging office. Give preference to standardized off-the-shelf containers or standard designs that meet the long life performance requirement.

9.8.4. If no standardized off-the-shelf container will satisfy the mission requirement, contact 403 SCMS (AFPTEF) for guidance on the design, build and testing of new long life or specialized containers (non-munitions) or 678 ARSS CDRS Office for specialized munitions containers.

9.9. Container Standardization. To promote standardization, a series of standard size containers are established for certain types of multi-application short life SPI packs (e.g. Fast Packs and Standard Packs). Standardization reduces the cost of fiberboard shipping containers, simplifies load planning, stacking, storage and reuse. Costs are reduced through central purchase of large production runs.

9.9.1. Adding New Multi-application Containers. 403 SCMS (AFPTEF) must approve recommendations for adding new multi-application containers to Air Force packaging systems before you develop or use them. 403 SCMS (AFPTEF) recommends approved multi-application containers with potential high use for inclusion in MIL-STD-2073-1.

9.10. Reusable Container Program Implementation Guidance.

9.10. (LITTLEROCKAFB)Reusable Container Program Implementation Guidance.

9.10.1. Program Roles and Responsibilities. At Installation/Wing/ALC/AFGLSC level, an effective reusable container program shall be established and implemented, maximizing recovery and reuse. This includes but is not limited to reimbursement and transfer of funds from host/tenant units for packaging services; lost, destroyed or discarded Fast Packs, standard packs, SPI shipping containers, packaging materials; labor hours for constructing or replacing SPI containers and commercial transportation (shipping and handling) costs. This gives the Wing and/or ALC/AFGLSC direct control over their program so they can adapt it to specific mission requirements. Following are responsibilities of the BCM and UCM:

9.10.1.1. The BCM or their designated representative shall ensure that all activities that receive, store, issue or ship government materiel:

9.10.1.1.1. Implement procedures for control, recovery and re-use of reusable containers, packaging materials, reimbursement or prior transfer of funds for packaging costs.

9.10.1.1.2. Ensure unit commanders appoint UCMs (primary and alternates) to establish and execute a viable, effective program. Units that utilize fewer than three (3) SPI containers, excluding Fast Packs, have the option not to have a flight/unit RCP at the discretion of the BCM.

9.10.1.1.3. Ensure the using organizational flights and the TO recovers and re-uses prescribed active government owned short and long-life reusable containers and other specialized containers (FSC 8115, 8140 and 8145) that are accounted for by Materiel Management and engine accounts.

9.10.1.1.4. Provide training and awareness to personnel assigned to non-transportation functions (e.g. maintenance, using organizational flights and other tenant units) on the concepts and procedures of the RCP.

9.10.1.1.4. **(LITTLEROCKAFB)** The 19 LRS Cargo Movements will provide training and awareness to personnel assigned to non-transportation functions (e.g. maintenance, using organizational flights and other tenant units) on the concepts and procedures of the RCP in conjunction with the annual reusable container working group meeting. Additionally, the BCM/representatives will

9.10.1.1.5. Receive and process AF Form 451, *Request for Packaging Service*, from using organizational flights when the proper SPI or Fast Pack container is required, but not provided. Using organizational flights will complete AF Form 451s, with UCM authorized signature, prior to item turn-in to LRS Materiel Management. AF Form 451 is also used for local fabrication requests of SPI containers.

9.10.1.1.6. Process the AF Form 406, *Miscellaneous Obligation Reimbursement Document (MORD)*, AF Form 616, *Fund Cite Authorization*, DD Form 448, *Military Interdepartmental Purchase Requests (MIPR)* and Government Purchase Card (formerly IMPAC) accounts for units requesting special packaging services to cover charges associated with repackaging of items (replacing lost or damaged containers), container repair and/or fabrication (materials and labor) and commercial shipping and handling.

9.10.1.1.6. **(LITTLEROCKAFB)** Process the AF Form 406, *Miscellaneous Obligation Reimbursement Document (MORD)*, AF Form 616, *Fund Cite Authorization*, DD Form 448, *Military Interdepartmental Purchase Requests (MIPR)* and Government Purchase Card accounts for **tenant** units requesting special packaging services to cover charges associated with repackaging of items (replacing lost or damaged containers), container repair and/or fabrication (materials and labor) and commercial shipping and handling. Reimbursement for replacing containers can/will be requested from **host** units that show a trend of abusing containers or fall below the AF standard of 90% reusable rate.

9.10.1.1.7. Maintain a list of UCMs authorized to sign AF Form 451. UCMs are the only personnel authorized to sign AF Form 451.

9.10.1.1.8. Identify and establish procedures for recovery, re-use, transfer and reimbursement of funds under the reusable container program, including review of AF Forms 451, Standard Form (SF) 364, *Report of Discrepancy (ROD)*, and requests for SPI packs and SPI waiver authority to deviate.

9.10.1.1.9. Identify, track (monthly) and report (semi-annually) all costs and reimbursements on packaging supplies (EEIC 609) and labor (EEIC 39711) for fiscal purposes to the installation/wing commander, accounting and finance, organizational unit(s) incurring the costs, and upon request, appropriate MAJCOM.

9.10.1.1.9. **(LITTLEROCKAFB)** The 19 LRS Cargo Movements will identify, track (monthly) and report (semi-annually) all costs and reimbursements on packaging supplies to the wing commander, accounting and finance, organizational unit(s) incurring the costs, and upon request, appropriate MAJCOM.

9.10.1.1.10. Ensure RCP compliance by performing semi-annual inspections of organizational flights/units reusable container storage areas.

9.10.1.1.10. **(LITTLEROCKAFB)** The 19 LRS Cargo Movements will perform semi-annual inspections of organizational flights/units reusable container storage areas will be accomplished by the BCM each January and July.

9.10.1.2. The UCM is the point of contact for packaging requirements and will:

9.10.1.2.1. Implement the RCP concepts and procedures herein.

9.10.1.2.2. Manage the organization's RCP and associated storage area, ensuring compliance with this instruction, MAJCOM and local supplements.

9.10.1.2.3. Coordinate with the BCM for assistance in resolving problems pertaining to the program.

9.10.1.2.4. Contact the TO if SPI requirements cannot be met.

9.10.1.2.5. Ensure sufficient storage space is available for reusable containers for items in their possession. Contact TO for disposition instructions after identifying excess serviceable reusable containers, if storage space is unavailable. Schedule turn-in of excess serviceable reusable containers to the TO for possible reuse.

9.10.1.2.6. Approve and sign AF Forms 451 pertaining to packaging services and reusable containers. Ensure all items on the form are properly completed and that the AF Form 451 accompanies items for turn-in to LRS.

9.10.1.2.7. Ensure serviceable items are removed from their assigned reusable containers and reparable items are placed in the same container for turn-in to Materiel Management or Flight Service Center. ESDS items need to be checked.

9.10.1.2.8. Ensure serviceable and/or depot reparable spares are kept (stored) in their prescribed SPI packs until installed or required for bench check or inspection. Additionally, ensure these spares are provided proper protection in assigned SPI packs during shipment (including deployment, mobility and exercises).

9.10.1.3. Program Implementation Procedures. The operating commands must set up procedures to develop and implement an effective RCP which will ensure maximum recovery and reuse of SPI containers. Program instructions implementing these procedures shall address the following:

9.10.1.3.1. Identify procedures and responsibilities for receipt, storage, issue, recovery, turn-in, screening, reporting and recycling of reusable containers and packing materials. Ensure that reusable containers are separated from refuse (trash) and supply pickup sites.

9.10.1.3.2. Identify procedures and responsibilities for recovering excess serviceable reusable containers and/or packaging material. Emphasize that reusable containers (non-specialized) and packaging materiel excess to the mission be listed on RECON for lateral support to other potential bases/units, where needed. Ensure effective methods and process for screening of reusable containers and packing material from recycling sites and waste streams (landfills, DRMS, etc.) are established. Reusable containers must not be needlessly discarded in waste receptacles or transferred to the DRMS unless directed in writing by the IM. If unable to re-distribute, then contact the prime IM for disposition.

9.10.1.3.3. Implement training procedures and responsibilities for using organizational flights. Generally, training will be performed by the BCM. At a minimum, training will include: identification and safeguarding of reusable containers and associated packaging material, procedures and responsibilities for processing AF Forms 451 for packaging services to include reimbursement of funds, replacement for wear and tear, lost, destroyed or discarded reusable containers. Include grading and marking standards of packaging materiel and lumber products used in CONUS and OCONUS. Familiarize personnel to regulations and standards associated with the packaging industry, both domestic and international. Emphasize requirements and mission support with packaging, handling, storing and movement of Air Force assets.

9.10.1.3.4. Using Organizational Flights should ensure the issued item is not separated from its specified container. Transfer the item and the container at the same time. Flights requiring second-level repair, periodic bench check, build-up, etc., must ensure that the specified container and item are promptly reunited. Upon receipt of the item from LRS Materiel Management Flight, ensure the required container is available. If the item is received without the required container, annotate on the issue document "No SPI container available." AF Form 451 must be used for all items without the required SPI or Fast Pack before shipment turn-in to transportation. TO will maintain a copy of Unit Container Managers, primary and alternates, authorized to sign AF Form 451. Ensure that copies of SF 364 (ROD) and AF Form 451 are kept with the container if the item is in the wrong container. The BCM will forward all AF Form 451s with all costs of packing to the LRS Resource Adviser (RA). The LRS RA will forward to the unit RAs. Packaging services costs will be reimbursed to LRS Cargo Movement account.

9.10.1.3.5. Organizational flights requiring packaging services will complete an AF Form 451. This form is supporting documentation for obligations made using AF Form 616 (or other instruments of payment) and can only be signed by the UCM. AF

Form 451 will stay with the item during the turn-in cycle and will be administered by the TO packaging section. AF Form 451 will accompany all items turned-in to TO without prescribed SPI or Fast Pack containers. The AF Form 451 for "container destroyed by user" or "item issued without appropriate container" will be accompanied by a MIPR/MORD Number in the remarks section. Items in which the proper containers cannot be located, or incorrect containers accompany the items, will not be accepted for turn-in without this form. When processing AF Forms 451 received from organizational units, annotate the necessary packaging materials and labor expenditures for direct packaging services payment accountability. All shipping and packaging materials costs incurred are subject to reimbursement or prior transfer of funds to procure packaging materials before shipment turn-in to transportation. When a unit brings an incorrect container and the SPI specifies a more expensive container, then either charge the unit for the use of the specified SPI container and give the incorrect container back to the unit, or charge the unit the difference between the specified SPI container and the incorrect container. Additional guidance in preparing AF Form 451 is found in Attachment 5.

9.10.1.3.6. Establish a base reusable container working group, composed of journeyman-level representatives from Deployment and Distribution Flight, maintenance and other major using groups and resource advisors. This working group will be chaired by the installation RCP Manager. Further, this working group will meet annually (and as needed) to coordinate actions, analyze budgetary and operational requirements, evaluate number of containers lost or destroyed and replacement cost, indications of negligence in discarding reusable containers and packing materials, number of excess reusable containers on-hand and status of disposition, address deficiencies and recommend corrective actions necessary for executing an effective and efficient base reusable container program.

9.10.1.3.6. **(LITTLEROCKAFB)** The 19 LRS Cargo Movements will establish a base reusable container working group, composed UCMs and other applicable representatives. The group will be chaired by the BCM, and meet annually (and as needed) to coordinate actions, analyze operational requirements, evaluate replacement cost, address deficiencies, and recommend corrective actions necessary for executing an effective and efficient base reusable container program.

9.10.1.3.7. Establish UCMs to assist unit commanders by ensuring flights are responsible for identifying, storing, protecting, recovering and reusing containers identified herein.

9.10.1.3.8. Identify procedures for evaluating deficiencies in the RCP. Establish procedures for performing corrective action and flight inspections. Review the AF Form 451, SF 364 and requests for SPI waiver authority to deviate.

9.10.1.3.9. Identify goals and procedures for evaluating and measuring the effectiveness and efficiency of the RCP.

9.10.1.3.10. Ensure organizational flights provide a covered, clean, dry space to protect reusable containers and packing materials from inclement weather during storage.

9.10.1.4. Program Evaluation and Efficiency.

9.10.1.4.1. The following goals are established to enhance the RCP: Improve training and awareness; Eliminate reusable container loss, unauthorized waste and destruction; Promote reusable container conservation.

9.10.1.4.2. To measure program effectiveness and efficiency, BCMs will perform semi-annual inspections of organizational units reusable container storage areas. BCMs will prepare and utilize the semi-annual report. Report distribution will include installation, group and applicable unit commanders, primary UCMs, and upon request, appropriate MAJCOM. The semi-annual report will include the following elements:

9.10.1.4.2.1. Unit Reusable Container Monitor Training.

9.10.1.4.2.1.1. Number of UCMs appointed in last six months.

9.10.1.4.2.1.2. Number of UCMs trained within 60 days of appointment.

9.10.1.4.2.1.3. Total number of UCMs appointed.

9.10.1.4.2.1.4. Percent of all UCMs trained.

9.10.1.4.2.2. Reusable Container Return Efficiency.

9.10.1.4.2.2.1. Number of AF Form 451s submitted in last six months and the associated total cost for supplies (EEIC 609) and labor (EEIC 39711) to provide/construct reusable containers.

9.10.1.4.2.2.2. Number of AF Form 451s submitted due to loss/destruction of reusable containers (list unit responsible, item nomenclature and SPI number) and the associated cost to provide/construct reusable containers.

9.10.1.4.2.3. Shipping Delays.

9.10.1.4.2.3.1. The objective of measuring shipping delays is to elevate program awareness by how the loss/destruction of reusable containers can impact the base mission.

9.10.1.4.2.3.2. To measure, AF Form 451s will be annotated when the item is received and the date the item is packaged. The delay is the total days accrued between these dates.

9.10.1.4.2.4. Reusable Container Storage and Conservation.

9.10.1.4.2.4.1. Number of unit reusable container storage areas inspected the last six months.

9.10.1.4.2.4.2. Percent of required inspections performed the last six months.

9.10.1.4.2.4.3. Unit reusable container storage areas not inspected (list unit and reason for not inspected).

9.10.1.4.2.4.4. Deficiencies identified during inspection (list date identified, category of deficiency, unit and status (open/closed)). Deficiencies will be categorized as Major or Minor.

9.10.1.4.2.4.4.1. Major deficiencies include: Reusable containers discarded in waste/refuse receptacles; Reusable containers susceptible to weather damage stored in location exposed to weather; Reusable containers stored in manner which could damage reusable containers; Evidence of improper opening/closing of reusable containers; Reusable container components not stored with container for which designed; Reusable containers used for other than intended purpose; Reusable containers not stored in designated storage areas.

9.10.1.4.2.4.4.2. Minor deficiencies include: Storage areas not identified; Storage area housekeeping; Storage area used for other than storing reusable containers.

Chapter 10

DISCREPANCY REPORTS AND TRACING PROCEDURES

10.1. Inspection. Inspect items systematically to prevent loss or damage from the time you receive them until you use or dispose of them. Report defects to help the packaging designer eliminate future damage.

10.2. Responsibilities of the Shipping Activity.

10.2.1. The shipping activity must package materiel to prevent damage during shipment.

10.2.2. Personnel performing packaging functions must meet minimum training requirements or be supervised by fully trained personnel.

10.2.3. When the shipping activity receives SF 364, *Report of Discrepancy (ROD)* or electronic *Shipment Discrepancy Report (SDR)* via WebSDR, they must notify responsible persons of deficiencies. They must train their personnel to correct deficiencies.

10.3. Damage Control in Receiving Activities. When you receive a shipment, check to:

10.3.1. Determine if damage occurred during transit.

10.3.2. Determine if the item is packaged according to the prescribed packaging requirements.

10.3.3. Ensure adequate packaging is at the proper level to prevent corrosion or deterioration during storage.

10.4. Procedures for Stored Items. DOD Regulation 4145.19-1, *Storage and Materials Handling*, includes procedures for inspecting stored items.

10.5. Damage to Issues. A major source of damage to delicate items is intra-base transfers. Protect items that are subject to damage from shock and vibration during handling and movement.

10.6. Discrepancy Reporting.

10.6.1. Transportation Discrepancies. TOs process and report over, short, damaged, and astray cargo using the DD Form 361, *Transportation Discrepancy Report (TDR)*, in compliance with DTR, Part II. Additional information may be found in 41 CFR, Parts 102-118, Public Contracts and Property Management. For FMS, refer to Paragraph 10.7. Air Force shipping activities are also required to report miscellaneous transportation discrepancies. Refer to DTR, Part II, Chapter 210, Paragraph H.1., and Appendix I. Particular attention will be directed to shipment discrepancies involving TPS and HAZMAT shipments.

10.6.1.1. For any discrepancies with AA&E, classified, sensitive, classified/unclassified NWRM and items of $20,000 value, follow procedures in paragraph 5.11.2 and 5.11.2.1

10.6.2. Packaging Discrepancies. When shipment damage, packaging deficiencies and container marking problems are noted, identify the discrepancy using an electronic Supply Discrepancy Report (SDR) via the DOD WebSDR system. Submit an online System Access Request (SAR) to DLA Transaction Services (DLATS) for requesting User IDs and passwords to access the

DOD WebSDR system at **https://transactionservices.dla.mil/daashome/homepage.asp**. Air Force submitters shall use the exact identification of four-digit (e.g. P201) packaging discrepancy sub-codes in the DOD WebSDR system. In the absence of DOD WebSDR, use the SF 364. SF 364 can be used for reporting local purchase discrepancies to the Base Contracting Office (BCO).

10.6.2.1. Requirements for Reporting Packaging Discrepancies.

10.6.2.1.1. When to Complete SF 364. SF 364 will be completed if damage to the items occurs and the total cost to correct exceeds $100 per line item or if any of the following deficiencies exist, regardless of cost to correct:

10.6.2.1.2. If the value of the item, shipment or package exceeds $2500.

10.6.2.1.3. Repetitive deficiencies by a particular activity or repetitive damage found upon receipt.

10.6.2.1.4. Any deficiencies in packaging involving ammunition, explosives, or other hazardous materials.

10.6.2.1.5. Packaging deficiencies resulting in damaged material that may endanger life or impair combat or deployment operations.

10.6.2.2. Compliance With Established Packaging Requirements. Unless items are damaged, SF 364 will not be issued against bases or ALCs under the following conditions:

10.6.2.2.1. Items packaged before the current SPI date are acceptable and need not be repackaged before shipment.

10.6.2.2.2. Contractor (with deviation number) or other service packages are acceptable for re-use as long as the container is a reusable, rather than one-trip, container. The prime AFGLSC packaging office must approve the use of a contractor pack by indicating the prime AFGLSC site and a deviation number in the lower right corner of the exterior container (for example, OC-001). When a contractor pack is used, annotate "contractor pack" on the DD Form 1348-1A or condition tag. Contractor packs may be recognized by the contractor data markings required by MIL-STD-129, such as purchase or delivery order and the name and address of the contractor.

10.6.2.2.3. The prime AFLGSC packaging office has approved an alternate pack and has provided a waiver authority deviation number.

10.6.2.2.4. Use of the next larger size Fast Pack container for shipments with Uniform Materiel Movement and Issue Priority System (UMMIPS) priority 01-08 if the required Type I (Vertical) or Type II (Slide) is not available. SF 364 will be issued if damage occurs or if the next larger size Fast Pack is used for lower priority shipments.

10.6.2.2.5. Use of larger size standard pack containers for shipment of unserviceable items when the correct size is unavailable.

10.6.3. Control Points. AFJMAN 23-215, *Reporting of Supply Discrepancies,* establishes control points for distributing packaging discrepancy reports. Ensure a copy of the packaging SDR is provided to the prime AFGLSC packaging office.

10.6.4. SDR Responsibilities. Upon completion of WebSDR, Receiving personnel will provide Customer Service either a copy of the SF364 or an electronic notification that a discrepancy exists within WebSDR. Customer Service personnel will monitor, track and coordinate all SF364 actions until the discrepancy is closed.

10.7. FMS Discrepant Materiel. When FMS discrepant materiel is returned to the custody of the U.S. Government, the materiel will be turned in on a Supply Discrepancy Report to the nearest U.S. accountable military activity (regardless of military service responsible for the materiel) and will be processed in accordance with U.S. procedures. Shipment documentation retention will be for 2 years at the shipping site and retired to the appropriate Federal Records Center for a period of 28 years. The shipment must be turned in on a DD Form 1348-1A showing a proper TAC and DODAAC. No hazardous materials will be accepted without a properly prepared Shipper's Declaration of Dangerous Goods. AFJMAN 23-215 is the authority for this process. For additional information refer to DTR, Part II.

10.8. Suggestions for Improved Packaging. Identify approved or more economical packaging methods, materials, and techniques by use of SF 364 reports. When submitting a suggestion recommending an improved pack for a specific national stock number, attach a SF 364 along with supporting photographs if possible that shows the packaging deficiency referenced and its cause.

10.9. Tracer Action. Tracing shipments that have not been delivered to the destination by the RDD is an important task. AFMAN 23-110, *USAF Supply Manual* details procedures for processing and return of the Transportation Tracer Listing (TTL) and the Delinquent Shipment Listing or R40. The TTL indicates delayed or lost shipments via government transportation channels. LRS/APS Commanders will establish responsibilities within their squadrons for completing tracing actions and for tracing shipments valued under $500. TOs will follow the guidance in DTR Part II, Chapter 210 (**http://www.transcom.mil/j5/pt/dtrpart2/dtr_part_ii_210.pdf**) when tracing efforts do not locate shipment and a Transportation Discrepancy Report (DD Form 361) must be accomplished. TOs will ensure an initial attempt is made to collect directly from carriers for lost (or damaged) shipments valued at less than $500 dollars. If unable to adjudicate under these local procedures a Transportation Discrepancy Report (DD Form 361) must be accomplished. Tracer action must be accomplished for all protective and classified, protected or GSA shipments regardless of dollar value. TOs can obtain shipment information by TCN, BOL or carrier's BOL through the GTN at website: **https://www.GTN.transcom.mil/index.jsp**. Additional information can be found by accessing the Tracker System at: **https://tracker.wpafb.af.mil**/.

10.9.1. Inbound Receiving. The Logistics Readiness Squadron Commander is responsible for ensuring inbound shipments to their facilities are properly in-checked, inspected and receipted. LRS Commanders may provide LRS Management and Systems Flight Customer Service personnel limited access to the Inbound Module of CMOS to perform research on inbound astray or non-receipted shipments. They will provide a Transportation Tracer Listing (TTL) in original and one copy to the Cargo Movement Section twice each month. The TTL lists shipments requiring tracer action or receipt information in BOL or TCN sequence. If information is incomplete, the Cargo Movement Section will annotate accordingly on the listing and return to the Customer Service Section for action. Provide the required annotations per AFMAN 23-110, volume 2, part 2, chapter 9 and return the listing to the LRS Management and Systems Flight Customer Service Section within 5 workdays of receipt.

10.9.1.1. If an item is missing, LRS Management and Systems Flight Customer Service Section will process SF 364 (SDR) according to AFMAN 23-110.

10.9.1.2. When the TO receives advance shipping notice or Report of Shipment, they will generate DD 361 to satisfy any over/short or damage condition.

10.9.2. Outbound – Cargo Movement Section will trace originating outbound shipments using the R40 (original and one copy), which the Management and Systems Flight provides approximately every 2 weeks. The R40 requests the status of originating shipments supported by the base level supply system in requisition number sequence. Return the annotated R40 listing to the Management and Systems' document control activity within 5 business days after receipt (see Para 10.13.).

10.10. AF GOCARE Program. GOCARE (Government Cargo Recovery Effort—formerly the Astray Cargo Program) is a DOD program run by SDDC Strategic Business Directorate to direct and guide the DOD in efforts to recover lost cargo found in CONUS commercial TSP warehouses (Freight terminals, HHG warehouses and storage locations, other commercial warehouses). The DTR, Part II, Chap 209 provides official guidance and DOD policy for GOCARE. The SDDC GOCARE Guidelines published in the SDDC website provide information on GOCARE recovery efforts: http://www.sddc.army.mil/sddc/Content/Pub/5380/gocare%20guidelines%20update%20for%20the%20web.pdf Responsibility for the AF GOCARE program management has been delegated from HAF/A4LM to AFGLSC, 401 SCMS/GUMAA. AF CONUS organizations will follow the DTR, SDDC GOCARE guidelines and these instructions in implementing the program.

10.10.1. AF Active, Reserve and ANG units with GOCARE committee members will establish a relationship with local commercial carriers and businesses to encourage communications in the recovery of lost and astray freight. AF committee members will ensure they visit carriers facilities in their area (coordinate visits when more than one DOD activities reside in one community or AOR--i.e. Active and ANG units co-located) at least quarterly.

10.10.2. AF Committee members will report findings from their visits to local facilities in a quarterly report using the format at Figure 10.1 below. Email a copy of the completed report to your parent MAJCOM A4 GOCARE official by the 10th business day of the month following the calendar quarter (reports due in Jan, Apr, Jul and Oct).

10.10.3. MAJCOM A4 GOCARE officials will compile their command reports and send their consolidated reports to 401SCMS/GUMAA by the 15th of the month the reports are due to SDDC. 401SCMS will forward the AF report to SDDC and HAF/A4 by the 21st of the month the reports are due.

10.10.4. GOCARE program requires reshipment of recovered astray freight received through causes other than the commercial carriers fault (requires SF361-DTR chap 210) to the proper destination. If available, quote the funds on the delivery documents to re-ship the recovered material. If the fund cite is not available, contact the origin shipper. If only the National Stock Number (NSN) is available, coordinate with servicing base Materiel Management Section or IM for disposition. Errors in a fund cite on the origin shipping document must be corrected before onward movement. If available information and coordination will not provide a resolution, process through your servicing base Management and Systems Flight, Customer Service Section for disposition.

10.10.5. If the carrier is at fault, ship on a "Free Astray Basis." This includes FMS shipments.

10.10.6. To obtain disposition instructions for recovered astray FMS shipments (when loss is not responsibility of carrier) contact the origin shipping office. If assistance is needed, contact AFSAC/COSD, 5490 Pearson Road, Wright-Patterson AFB OH 45433-5332 (1-800-448-0361)

Figure 10.1. COMMITTEE MEMBER GOCARE QUARTERLY REPORT.

Quarterly reports are due to MAJCOM GOCARE manager no later than the 10the business day of reporting QTR

Email report to: -
DSN: -, COMM: -

Committee Members
Name:
Facility/MAJCOM:
Committee Member
Code:
((***this information can be found in the GOCARE booklet)***

Quarterly Report Date ***(please hi-lite in bold)***	1st Jan 7-Mar 30	2nd Apr 1-Jun 30	3rd Jul 1 -Sep 30	4th Oct 1 - Dec31

Chairperson Report: Yes **No**
(please hi-lite in bold, for chairprerson use only)

Carrier's Name	Number of calls made to carrier's terminal	Number of Visits made to carrier's terminal	Dollar Value of Freight Found	Number of pieces found	Freight moved to destination **(*if not please explain below*)**	Amount of time expended performing astray freight duties

10.11. Tracing Process. TOs may use the tracing process to determine the status or location of shipments that have been delayed, misplaced, or upgraded in priority. Do not initiate tracer action until the Management and Systems Flight Customer Service Section provides positive notification that the shipment has been released for movement to the consignee, and that normal transit time has expired and undue delay has occurred. Initiate tracer action as follows:

10.11.1. Shipments within CONUS:

10.11.1.1. NMCS/MICAP, immediately upon request.

10.11.1.2. Other TP-1 (Expedite), normally not prior to 2 days after shipped date.

10.11.1.3. TP-2 (Expedite), not prior to 5 days after shipped date, and not later than 10 days after shipped date.

10.11.1.4. TP-3 (Routine), not prior to 10 days after shipped date, and not later than 20 days after shipped date.

10.11.2. Shipments to/from CONUS and overseas:

10.11.2.1. 999/NMCS/MICAP, immediately upon request.

10.11.2.2. Other TP-1 (Expedite), normally not prior to 4 days after shipped date.

10.11.2.3. TP-2 (Expedite), not prior to 8 days after shipped date, and not later than 14 days after shipped date.

10.11.2.4. TP-3 (Routine), not prior to 30 days after shipped date, and not later than 70 days after shipped date.

10.12. Transportation Tracer Listing (TTL). The Material Management Flight Customer Service Section will check shipment status in Tracker before giving TTL listing to TO for action. Mark each item on the list with one of the following statements. **NOTE:** If any other statement is provided, Customer Service personnel may return the listing to TO for appropriate action.

10.12.1. “Received or in file (date).” This annotation indicates TO received the shipment on base and forwarded it to Logistics Readiness Squadron/Supply Activity for receiving action.

10.12.2. “TO tracing.” This annotation indicates TO has initiated tracer action. Trace the shipment through automated systems, the carrier, or with the consignor if known. Send tracer action requests to the IM when the consignor can't be identified.

10.12.3. “Updated shipment status.” This annotation indicates TO has received updated shipment status from the supplier. If Cargo Movement Section information differs with that shown on the TTL, circle the outdated transportation data and enter updated status.

10.12.4. Attach a copy of the DD 361, Transportation Discrepancy Report (TDR), or tracing message, to the TTL and annotate "DD 361/Message attached." Preparation and distribution of DD 361 is made according to the DTR, Part II.

10.12.5. If the majority of line items are repeats from the previous TTL, annotate "Previously Researched by the Cargo Movement Section,” and return the TTL to the Customer Service Section for action.

10.12.6. The annotation "TM1 action required," requires the Customer Service Section to submit a request for transportation status on overseas follow-ups, through DAAS to the Air Force Shipper Service Control Office (SSCO), for tracing action.

10.12.7. “Return the Listing.” TO will return the annotated TTL to Stock Control within 5 workdays of receipt. **NOTE:** TO may keep copy 2 if desired.

10.13. Delinquent Shipment Listing or R40 Procedures. TOs should compare entries against the property shipped files. Annotate each entry after review. Return copies of documents with

the listing if they have not previously been provided to the Management and Systems' document control activity.

10.13. (LITTLEROCKAFB)Delinquent Shipment Listing or R40 Procedures. A R40 will be printed out on the 1st and 3rd Monday of each month and distributed with an attached cover page. The required annotations will be made IAW AFI 24-203 and returned NLT 1100 the following Friday.

10.13.1. If the item has been shipped, enter the mode, TCN, date shipped, hold code, etc. Alternatively, simply attach a copy of the shipment planning worksheet.

10.13.2. Enter Julian date shipment was made if confident of the date although unable to provide hold data or TCN/GBL.

10.13.3. Enter "no record of receipt from the Management and Systems' document control activity" if there is no record of the item being received from the Management and Systems' document control activity.

10.13.4. Line out those entries for which movement data was previously submitted.

10.13.5. Return completed R40 listing to the Management and Systems' document control activity within 5 business days after receipt.

10.14. Additional procedures for CMOS operating locations.

10.14.1. Check the Volume of the MILSTRIP shipments manually in-checked (without pre-positioned data from the Standard Base Supply System (SBSS) in file). Too many shipments, which have to be manually input, indicate a problem with the Interactive Communication Interface (ICI) or SBSS. Check with the Remote Processing Station (RPS) computer room supervisor and the LAN manager. Satellite accounts should contact their host SBSS for assistance. If all shipments to a specific off-base organization (usually document identifier ISU, MSI, or DOR) for a single organization code (X373AA12341234) or all shipments to DRMS are having to be manually in-checked (no advanced information from SBSS), have base supply ensure the off-base indicator is set correctly. Documents with identifier TRM have to be manually input.

10.14.2. Check the accuracy of the MILSTRIP shipments manually in-checked, without pre-positioned data from the SBSS in file. Any variance (e.g. FB instead of FE, transposed digits, system designator 01 instead of A1, etc.) between the supply document number and the system designator on the document and the input to CMOS will cause the SSC message to fail at the SBSS and the correct TCN may appear on both Part 5 and Part 6 of the R40 report. Ensure MILSTRIP shipments manually in-checked (without pre-positioned data) are assigned "Doc Type" of "M" at the "Shipment Planning Detail" window. CMOS does not produce data for the SBSS for any other "Doc Type."

10.14.3. Is the Management and Systems' document control activity researching and correcting the rejects (type 260) from SSCs returned to the SBSS with erroneous (non-matching) system designators or document numbers?

10.14.4. Check the inbound message log for messages with transmission mode of "ICI" and transmission status of "F" (failed). Review the associated priority message to determine the cause of the failure. Have these failures been reviewed with the local supply computer room

personnel? Has the CMOS team at the SSG FAB (DSN 596-5771) been notified and/or has an SBSS discrepancy report been submitted?

10.14.5. Release all shipments by close-of-business on the date shipped. Ensure every item in all consolidated shipments has been in-checked, linked to the lead TCN, and released in CMOS. The release action generates the communication messages for all CMOS interfaces, including the SBSS and is essential for ITV and accurate record keeping.

10.14.6. Do items appear on the R40 even though the shipment was in-checked and/or shipped and released, prior to the date of the R40? If so, select three to five examples that were in-checked and/or shipped within the last 30 days. Ask the base supply Management and Systems' document control activity supervisor to ensure that the SBSS shipment suspense record for each example still does not contain the in-checked or shipment information. Check the outbound message log and select the corresponding ICI message and delete the Transmission Status field. This will cause the message to be resent to the SBSS. Coordinate with the Management and Systems' document control activity supervisor and obtain feedback as to when these messages (specific TCNs) are received and whether they loaded data correctly or rejected (failed). If they have not been received within a reasonable time, check the transmission status field and ensure it had changed back to a "P" (processed). Then ensure all ICI connections are up and talking to each other. If the Transmission Status field changed to an "F" (failed), refer to Paragraph 10.14.8. below.

10.14.7. Are the CMOS R40 monitor, the SBSS computer room supervisor, and the Management and Systems' document control activity supervisor working together to resolve problems?

10.14.8. Are problems which are beyond local capabilities to fix elevated to the SSG Field Assistance Branch (DSN 596-5771) for resolution?

10.15. Tracing OCONUS DTS Shipments. Tracing can be accomplished through GTN, Tracker, GATES, and other automated systems. For customers who do not have access to automated means of tracing overseas shipments, contact the Air Force ACA/SSLO at Dover AFB, DE, for east coast or Travis AFB CA for west coast by telephone, fax, or e-mail (see DTR, Part II). The SSLO will trace shipment(s) by TCN and provide shipping status to the requesting activity as follows:

10.15.1. If no record is found, or if there is only a record of the ATCMD, the requester should go back to the originating point (shipper or supplier) for status.

10.15.2. If there is a record of POE receipt, the SSLO will check with the POE Customer Service Branch for status and advise the requester.

10.15.3. If there is a record of receipt and lift, the SSLO will advise the shipper.

Chapter 11

CLEARANCE OF AIR FORCE CARGO AND SHIPPER SERVICES

11.1. CONUS Distribution Management Cell (CDMC). The CDMC is the official clearance agency for shipments planned for lift on military owned or controlled assets to overseas points. It coordinates movement to the port of embarkation (POE) with both shippers and project managers. The CDMC is responsible to maintain visibility over cleared cargo and provides shipment status to tracer requests. In addition, the CDMC will work the POEs and shippers to ensure advance movement data are at the ports prior to arrival of materiel. Elements within the CDMC are the Air Force ACA and the Shipper Service Liaison Office (SSLO). The CDMC provides a flexible process to locate, divert, expedite and/or provides visibility for any mission critical cargo. The CDMC operates from a Command and Control Center at Wright-Patterson AFB, OH, with additional personnel located within the CONUS aerial ports. A myriad of asset visibility systems, commercial shippers, and overseas ports will be used to perform its mission. The information gained will be used to meet the customer needs for their cargo delivery. The data will also be used to focus on and alleviate systematic conditions slowing the movement of cargo through the DTS and commercial transportation system. To request the services of the CDMC go to the 591 SCMG website: https://www.my.af.mil/gcss-af/USAF/ep/globalTab.do?channelPageId=-1749145. From the menu on the left, select Library >> Policy >> Airlift Policy.

11.2. Theater Consolidation Shipping Point – Europe (TCSP-E). The TCSP-E is the single theater focal point for timely management of sustainment cargo moving into theater and transshipment of cargo to final predetermined destinations. The TCSP-E forecasts cargo arrival through multiple Logistics Information Systems reports to make modal decisions prior to air cargo arriving via AMC. Modal decisions take place at least 8 hours prior to cargo arrival, providing an opportunity for TCSP-E to arrange both air and surface modes for onward transportation to selected destinations within theater. Additionally, the TCSP-E provides a flexible process to locate, divert, and expedite intra-theater cargo movement for selected channels.

11.3. Air Force Eligibility and Challenge Procedures. The following Air Force airlift eligibility and challenge procedures are effective 1 November 2004 and supersede previously published version. Procedures for implementing current policy are specified in the following paragraphs. For the most current information on airlift eligibility and challenge procedures, visit the 591 SCMG website: https://www.my.af.mil/gcss-af/USAF/ep/globalTab.do?channelPageId=-1749145 From the menu on the left, select Library >> Policy >> Airlift Policy.

11.3.1. References.

11.3.1.1. DOD 4140.1-R, *DOD Supply Chain Materiel Management Regulation*

11.3.1.2. DTR 4500.9-R, , *Part II, Cargo Movement*

11.3.1.3. AFMAN 23-110, *USAF Supply Management*

11.3.2. Airlift Eligibility. Only TP-1 shipments with a valid Required Delivery Date (RDD) to include a blank RDD and TP-2 shipments with a valid RDD as shown below are airlift eligible. TP-3 is not eligible for air movement and will be automatically diverted to surface. However, certain medical and short shelf life items may be authorized to move by air as TP-3

only if they have a valid RDD and/or project code. The following table illustrates the relationship between the RDD and TP for airlift eligible shipments.

Table 11.1. TP - RDD Relationship

TRANS PRIORITY	SUPPLY PRIORITY	RDD
1	01-03	All RDDs to include blank date (RDDs beginning with S or X are excluded).
2	04-15	RDD 555, 777, or Julian Date that is less than or equal to 21 days of date in TCN or requisition.

11.3.3. Challenge Criteria.

11.3.3.1. RDD 999. The Air Force ACAwill challenge the following commodities of AF sponsored shipments with RDD 999. These commodities typically would not meet NMCS/MICAP requirements in accordance with Ref A thru D policy/procedures. When shipments are offered as RDD 999 with the following commodities, the requisitioner or shipper will be notified that the shipment is being challenged. Commanders will approve, or delegate in writing to specific personnel the authority to approve, all NMCS/MICAP requisitions in writing. The requisitioner/shipper will then need to provide this written approval by the appropriate authority to support assignment of RDD 999.

B - Construction Materials
D - Animals
E - Engineer Supplies
G - Printed Forms or Publications
J – Unaccompanied Baggage
K - Clothing or Fabrics
N - Ship Parts
Q - Plants, Plant Products, and Other Organisms
S - Office and School Supplies, Office Machines and Furniture
T - Household Goods
U - Mail
W- Any material not otherwise specified that may require special handling with special instructions identified in the DI T_9 trailer data. Primarily used with channel airlift 463L pallets.
Y - Personnel Services
Z – Human Remains

The requisitioner/shipper has the option to substantiate air transport at the time of initial request to the ACA. The requisitioner/shipper should contact the ACA via email, fax, or phone with their justification for use of air to prevent delay due to challenge procedures on urgently required cargo. Shipments not justified to move as 999 will be downgraded. The ACA will determine applicable priority and mode.

11.3.3.2. If a shipment with any of the above commodities is released to the port as RDD 999 prior to advance clearance, the shipper service liaison office at the port will have the shipment frustrated until the challenged process is completed.

11.3.3.3. Air Force funded Second Destination Transportation (SDT)/Central Managed Account (CMA) (TAC = F_ _ _) shipments assigned a TP-1 with any RDD other than 999 or TP-2 with any RDD will be challenged when the shipment exceeds 250 pounds or 25 cube.

11.3.3.4. Defense Logistics Agency (DLA) funded (TAC = S_ _ _) shipments assigned a TP-1 with any RDD other than 999 or TP-2 with any RDD will be challenged when the shipment exceeds 500 pounds or 50 cube.

11.3.3.5. TP-2 shipments with blank RDD are not eligible for airlift and will automatically be diverted to surface.

11.3.3.6. TP-3 shipments offered for airlift will automatically be diverted to surface movement, with the exception of short expiration date items (see Paragraph 2.4.2.). However, TP-3 shipments may move as deferred air freight (TP-4) upon approval by Air Force ACA. Shipper must receive clearance from ACA prior to shipping to the port.

11.3.3.7. JCS Project Code Cargo (9_ _). JCS project coded cargo is subject to ACA challenge/hold action for purposes of controlling cargo flow in or out of the airlift system or to preclude misuse of project codes. Based on hold findings, the ACA will authorize (total or partial) airlift or can request shipment diversion to surface.

11.3.4. Exemptions. TP-1 and TP-2 shipments with one of the characteristics listed below are all airlift eligible and exempt from challenge action and will continue to be cleared for airlift:

11.3.4.1. Aircraft Engines.

11.3.4.2. Foreign Military Sales (FMS): If the delivery term code (DTC), located at the fifth position of the TCN, is 6, 7, 9, A, D, F, G, or J.

11.3.4.3. Shipments destined to FM5655 up to 1,500 pounds.

11.3.4.4. Shipments with short expiration date (whole blood, perishable subsistence, biological, batteries, required refrigeration, radioactive, etc).

11.3.4.5. AMC Support Shipments (TAC QMRS).

11.3.4.6. TACs beginning with H, T and X

11.3.4.7. Courier And Classified Shipments.

11.3.5. Deferred Air Freight (TP-4). This allows non-air eligible cargo (TP-3 and excess weights/cubes) to move at surface rates in uncommitted aircraft capacity. Air terminal managers in coordination with the ACA will determine the actual amount of TP-4 accepted into the aerial ports. Cargo must be cleared through the ACA as TP-4 prior to movement.

11.3.6. Worldwide Express (WWX). Shipments less than 300 lbs which meet the WWX/IHX eligibility criteria and carrier provides door-to-door service to final destination.

11.3.7. If further clarification or assistance is needed, please contact one of the following POCS:

11.3.7.1. ACA, Wright-Patterson AFB, OH:635 SCMW, DSN 787-4946/COM'L (937) 257-4946

11.3.7.2. ACA, Dover AFB DE: DSN 445-6277/COM'L (302) 677-6277

11.3.7.3. ACA, Travis AFB CA: DSN 837-5861/COM'L (707) 424-5861

11.3.7.4. ACA, NAS Norfolk, VA: visit website or contact the ACA.

11.3.7.5. ACA, Charleston AFB, SC: visit website or contact the ACA.

11.3.7.6. ACA, McGuire AFB, NJ: visit website or contact the ACA.

11.3.8. For the most current and updated version of these procedures, you may visit the591 SCMG website: https://www.my.af.mil/gcss-af/USAF/ep/globalTab.do?channelPageId=-1749145. From the menu on the left, select Library >> Policy >> Airlift Policy.

Chapter 12

TRANSPORTATION PAYMENT PROCESS

12.1. TPPS is the Commercial carrier payment process by which carriers are paid for services directly by US Bank. It is managed for the Air Force by the Air Force Global Logistics Support Center (AFGLSC). The Deputy Secretary of Defense has directed the use of TPPS for this purpose and is applicable to AF Shippers, DOD Commercial carriers, brokers and AFGLSC, Third Party Logistics providers.

12.2. TPPS Payment Process. The procedures outlined in the payment process must be adhered to in order for the Certifying Officer (CO) to accurately certify the TPPS Summary Invoice (PSI). The Defense Finance and Accounting Service (DFAS) will reimburse the US Bank for approved charges involved with shipping services based on obligations cited on the PSI. The commercial carrier business rules contain the following functions in the payment process.

12.2.1. **Shipment Booking.** The shipping Transportation Officer (TO) or designated representative will enter shipment data into one of the following automated shipment data systems: The Cargo Movement Operating System (CMOS) or Global Freight Management (GFM)/Electronic Transportation Acquisition (ETA). If CMOS/GFM-ETA is unavailable, a shipper invoice "Buyer Document" must be created manually and the data entered directly into TPPS at **https://www.TPPS.com/USBank** If a carrier's software or waybill is used to create the movement document, the PRO or Tracking Number assigned by the carrier will be input into TPPS and used as the Buyer Document Identification Number. For assistance with the creation of a shipper invoice, contact the TPPS help desk or AFGLSC 401 SCMS/GUMAB.

12.2.1.1. When a site initially sets up a TPPS account, the automated shipping system to be used must be identified. This will ensure that the proper "sort code" is assigned. GFM/ETA utilizes the Government Bill of Lading Office Code (GBLOC) and CMOS uses the Department of Defense Activity Address Code (DODAAC).

12.2.1.2. Carriers are identified to TPPS by their unique Standard Carrier Alpha Code (SCAC) Shipping offices will ONLY utilize the official SCAC for a carrier. A List of approved SCACs for all TPPS participating carriers is available on the TPPS web site, Business Partners, Certified Seller List.

12.2.1.3. TOs shall not accept a shipment without a valid TAC, MORD/MIPR number/or SDN. The appropriation chargeable will be entered with the shipment details into CMOS, GFM/ETA, or TPPS. If manually inputting a buyer invoice into TPPS, shippers must ensure that the Chart of Accounts (COA) reflects the proper funding reference for the shipment.

12.2.1.4. When utilizing CMOS, System Administrators must ensure that the Site Specific Data screen, Bill To field is populated with USBANK to identify the use of TPPS. The MRM 15 indicator must also be checked for each carrier SCAC loaded into the Surface Freight Outbound, Commercial Carrier Data screen.

12.2.2. **Documentation**. Two copies of the Commercial Bill of Lading (CBL) are printed at a minimum, one is given to the carrier representative at the time of pick-up and the other is retained for TO cargo movement file in accordance with DOD FMR requirements.. Additional copies may be produced if required

12.2.2.1. The Movement Documents will be released immediately following pickup or within prescribed timeframes to obtain proper ITV. This will release the electronic CBL data to TPPS. If shipping via I2P Express Ship, check for breaks in the Pickup Record Number. A break signifies a file was not released out of CMOS successfully. If there is a break in sequence, immediately contact the Field Assistance Branch (FAB) at DSN 596-5771.

12.2.3. **Status/Price Confirmation Generation**. The carrier will submit delivery status to TPPS via Electronic Data Interchange (EDI) 214 transaction set, the TPPS web interface or by telephone. If the carrier submits price data to TPPS, it will be via EDI 110/210 transaction sets. The carrier will perform services according to the shipping instructions as specified in the CBL and applicable contracts and tenders. The carrier must provide notification of delivery of the shipment to TPPS before the payment can be made. Cargo Movement Sections will track all CBLs issued, and follow up with carriers on shipments that do not have a notice of delivery IAW contracted timeframes..

12.2.3.1. If the shipment incurs additional charges for services or other accessorial charges, the carrier will bill the origin TO by creating a linked eBill in TPPS. Carriers will create linked eBills for any charges not included in the original billing transaction. The linked eBill will cause the CBL to appear in audit exception in TPPS. The destination TO shall notify the origin TO of any additional charges associated with the CBL. If the charges are to be paid by destination, the destination TO must provide an LOA/SDN to the origin TO; procedures for a MIPR or an AF 616 apply. The origin TO will input the applicable LOA and approve the linked eBill for payment. Anytime a linked eBill is created, the “notes” feature of TPPS must be annotated with the rationale for eBill payment. Unlinked eBills are prohibited in TPPS per DOD Memorandum dated April 2, 2008.

12.2.4. **Accounting Classification Review**. At any time during the billing cycle, the ”Transportation of Things” program manager (can be designated as the Funds Manager (FM) for that account) and the Accounting Liaison Office will coordinate and review the Statement Preview or Expense Distribution in TPPS to confirm the proper use of the applicable LOA. If a change in the LOA is required, the FM will coordinate with the TPPS POC in the Distribution and Deployment Flight. Any errors or changes referred to the TO will be corrected and documented in the TPPS note function. All changes must be handled promptly, and should not exceed three Government Business Days (GBDs).

12.2.4.1. Tracker Lite is the “mid stream” funds check that occurs after the shipment has been released from CMOS, but before the shipment has been posted into TPPS. As the authoritative source of Air Force funding policy, Tracker Lite prevents unauthorized use of CMA funds. If Tracker Lite determines that funding cited by the shipper is inappropriate, Tracker Lite will either assign the correct funding or will designate the shipment as funded by the shipping unit. Shipping sites are encouraged to obtain Tracker

Lite access to determine appropriate funding during the planning process, view funding changes after shipment release, and verify the status of transactions passing to TPPS.

12.2.5. **Carrier Payment Approval Requirements**. TOs will assign each individual TPPS user a maximum dollar amount for carrier payment approval. Primary and alternate TPPS approvers are designated for various thresholds in the event the shipment exceeds a single user's maximum approval limit. When a transaction exceeds all local approval levels, contact AFGLSC 401 SCMS/GUMAB for assistance. The approval level can be temporarily increased, on behalf of the shipper if the request is submitted prior to posting of the transaction in TPPS. If the request is submitted after transaction submission a GUMAB representative will make the approval on behalf of the shipper. These actions must also be annotated within the notes feature for that transaction. For audit processes, the TO should verify delivery status by contacting the destination TO. If discrepancies are discovered, both origin and destination TOs should notify the carrier for resolution.

12.2.5.1. The shipping TO will approve payment for the amount determined to be the government's responsibility to pay. The amount to be paid includes the rate for the shipment and any authorized accessorial charges as specified in the contract.

12.2.5.2. Payment by US Bank cannot be made until there is confirmation in TPPS that services have been performed. The confirmation of performed services will be the receipt of the carrier's notification of delivery. Actual carrier payment will be based on services annotated on the CBL. The approving official will launch the TPPS Transaction Manager function daily, review transaction status, cancel and approve or place on hold all shipments with a delivery notification. The notes function must be used to substantiate placing a transaction in "hold" or "cancel" status so the carrier is notified and can take action if necessary.

12.2.5.3. In the government and carrier data models, maximum automatic approval price thresholds have been established in TPPS. TOs may request a change to the price threshold based upon workload and carrier characteristics. Requests will be routed through MAJCOM for approval before submission to AFGLSC 401 SCMS/GUMAB.

12.2.5.3.1. Shipments meeting the automatic approval price threshold and tolerance parameters will be approved for payment without an on-line review by the TO.

12.2.5.4. Any transactions that are not automatically approved must be approved manually. Whenever possible, a separation of duties should be maintained and the person who approves carrier payment should be different from the person who initiated the movement document. Shipments that do not meet the auto approval criteria, must be addressed within three GBDs after notification of delivery and one of the following actions must be performed: (1) Approve the payment, (2) Place on hold, and request additional information from carrier, and cite in a TPPS note, (3) Cancel the transaction and record reason in a TPPS note.

12.2.5.5. The TO must approve for payment, the amount determined to be the government's responsibility to pay. Differences between this price and the originally tendered estimate (if higher) will be resolved in a linked eBill. Adjustments in the original payment estimate must be documented in the TPPS note function for the purpose of invoice certification and audit.

12.2.5.5.1. Once a response from a carrier is received on a shipment placed in hold, the TO that placed the hold has three GBDs to approve or deny.

12.2.5.6. The TO can update a transaction in TPPS before US Bank remits payment to the carrier. The TO approving the change must attach a note to the transaction in TPPS explaining the change. All changes affecting price must be recorded in TPPS either directly in the form as a note, or as an update from the shipper system.

12.2.5.6.1. If a shipment is delivered after the Required Delivery Date (RDD), and the price paid is contingent on timely delivery, the TO will adjust the price in TPPS prior to approval and record the rationale in a TPPS note. The price adjustment will be determined by the terms of the contract or tender. If payment for a late shipment was automatically approved, the TO will submit an eBill to request an appropriate adjustment in price accompanied by a note detailing the reason for the reimbursement request.

12.2.5.7. After US Bank has paid the carrier, any changes to price or shipment data must be entered into TPPS via the linked eBill process and annotated in the transaction notes.

12.2.6. **Carrier Payment.** US Bank will not pay the carrier until notification of delivery and TO approval is received. US Bank will pay the carrier after the TO approves the transaction for payment, removes a transaction from hold status or resolves an eBill. The carrier payment approval process (referenced in paragraph 12.1.5.) outlines the action the TO will use to approve transactions.

12.2.7. **Accounting.** Individuals responsible for LOAs, MORDs, and MIPRs will manually adjust or post obligations utilizing the information available in TPPS (Once the process becomes fully automated, TPPS will send obligations and accruals direct to DFAS).

12.2.8. TPPS Summary Invoice (PSI). Procedures for the Prompt Payment Act apply. The responsibilities for certifying officers, accountable officials, and reviewing officials are contained in DOD 7000.14, DoD Financial Management Regulation (DoDFMR), Volume 5, Chapter 33, Accountable Officials and Certifying Officers (see Paragraph 3307 for information regarding pecuniary liability): **ttp://www.defenselink.mil/comptroller/fmr/05/05_33.pdf** The LRS/APS commander is the designated appointing authority for the Certifying Official. The appointment must be in writing and a copy of the appointment letter, along with the DD Form 577, Signature Card, must be on file with the DFAS Indianapolis Disbursing Office. Supervisors will ensure all appointed COs and AOs complete initial and annual refresher Certifying Officer Legislation Foundations and Certifying Officer Legislation Transportation Pay CBT requirements IAW the DOD FMR, Volume 5, Chapter 33, Para. 330302. Sub para. A. TPPS system administers manage and control user profiles to include periodically validating user access and authorization levels to improve separation of duty issues for the TPPS billing system.

12.2.8.1. The Certifying Officer will utilize the open summary invoice preview to research PSI entries prior to the availability of the PSI no less than two TBDs prior to the statement cycle date to identify any transaction discrepancies. Any discrepancies must be immediately reported to the TPPS Customer Operations Desk for investigation and resolution. The Funds Manager report can be accessed daily to review shipments that have been paid in TPPS.

12.2.8.2. PSIs from US Bank are normally available to the Certifying Officers two days after the 15th of the month. The CO is to retrieve statements when made available by the bank. The CO will date stamp the date received on the PSI when retrieved. If the PSI is not available two days after the 15th, the CO will stamp the PSI with the date the PSI became available. The PSI must be accessed through the TPPS website and printed out. No hard copy will be mailed to the Certifying Officer. The Certifying Officer will review the PSI from US Bank to ensure that it reflects the actual carrier payments.

12.2.8.2.1. Electronic Statement Certification. The certifying official will review and approve payment by acknowledging the following statement: "As a Certifying Officer, I hereby certify that this Summary Invoice represents the amount due U.S. Bank for payment services rendered during the billing period ending (mmm/dd/yyyy). I further certify that the amounts shown as being expensed to each expense account are accurate and correct. This certification applies to each transaction contained within the Summary Invoice, jointly and severally". Upon electronic certification, DFAS will reimburse the bank as indicated on the invoice.

12.2.8.2.2. Manual Statement Certification. The CO will date stamp the date received on the PSI when retrieved. If PSI is not available two days after the 15th, the CO will stamp the PSI with the date the PSI became available. The PSI must be accessed through the TPPS website and printed out. No hard copy will be mailed to the Certifying Officer. The Certifying Officer will review the PSI from US Bank to ensure that it reflects the actual carrier payments. The Certifying Officer must certify the PSI and forward it, along with the Line Level Detail for the same period to the designated DFAS payment center.

12.2.8.3. Statements requiring both electronic and manual certification will process transactions IAW 12.2.8.2 for each invoicing type.

12.2.8.4. The Certifying Officer must certify the PSI and forward it, along with the Line Level Detail for the same period to the designated DFAS payment center by the third calendar day following the date the PSI is available. This is to ensure the DFAS payment center has sufficient time to validate and make payment to US Bank to meet Prompt Payment Act requirements.

12.2.8.5. Accounts will be suspended if delinquent greater than 105 days. Upon suspension, US Bank will not pay any additional payments to carriers until the delinquency is resolved. Even if the shipper approves payment to the carrier, the payment will not be generated and will remain in an "approval final" status versus going to a "payment initiated" status. In addition, delinquent accounts generate interest charges to US Bank which are funded by the shipping base O&M accounts.

12.2.9. **Bank Payment**. The US Bank's PSI charges will be summarized by TAC and associated LOA. The PSI will not include SDN level of detail. The Line Level Detail will provide the SDN level detail. Additional supporting detail is available in TPPS via multiple reporting tools.

12.2.9.1. If the DFAS payment office receives a certified PSI with a LOA that fails edit in the entitlement system because of insufficient funds available, DFAS will increase the obligation to the billed value. If the LOA fails the edit because no funds are available,

DFAS will either establish an obligation, or will debit the service's alternate LOA. If the LOA fails the edit because of validity, DFAS will attempt to identify the correct LOA by contacting the originating TO. The originating TO will have two GBDs to provide a corrected LOA. If unsuccessful, DFAS will assign the service's alternate LOA for billed value and notify the HQ POC for the alternate LOA. The DFAS payment office will notify the HQ POC of any obligation increase, the establishment of any obligation, or the use of the alternate LOA. DFAS will then process the payment to US Bank.

12.2.10. **Dispute Resolution.** The following guidelines will be used for the creation of linked eBills to resolve disputes:

12.2.10.1. The carrier has the option to go through the appropriate Surface Deployment and Distribution Command (SDDC) office to request a price adjustment. However, a billing dispute must first go through the eBill process before requesting a price adjustment from SDDC.

12.2.10.2. Either the TO or the carrier can submit a linked eBill. After the linked eBill is submitted to TPPS, the other party will have three GBDs after receipt to reply. After receiving a linked eBill from the carrier the TO will either: approve payment, cancel payment, or hold payment. The notes function will be used to document any action necessary to resolve the transaction in a "hold" or "canceled" status.

12.2.10.3. If the TO issues a credit to the carrier in a linked eBill the carrier must respond within three GBDs by approval, cancel or hold on the credit.

12.2.10.4. Price disputes that cannot be resolved between the TO and the carrier after 60 days will be forwarded to SDDC.

12.3. Local Certification Process (LCP). LCP is the process where TPPS enabled sites have the ability to utilize WCF and SDT/CMA TACs for shipments who meet funding criteria set forth in the funding guidelines. These shipments along with all others are locally approved and certified by the shipper site and reconciled on their local PSI. AFGLSC 401 SCMS/GUMAB will only process transactions for those sites which cannot be LCP enabled. This is limited to sites in the AOR. (Reference Paragraph 12.1.4 for guidelines on researching valid AFWCF and Specific SDT/CMS TACs authorized by TPB).

12.4. Third Party Billing (TPB). This procedure applies to authorized TPB certified carriers as directed by HQ USAF/A4LM. TOs must use TPB only if not LCP enabled and when the shipment is funded with an AFWCF or specific SDT/CMA TAC. AFGLSC 401 SCMS/GUMAB has provided detailed TPB and TAC information in the funding memorandums and on the 591 SCMG website: **https://www.my.af.mil/gcss-af/USAF/ep/globalTab.do?channelPageId=-1749145.**From the menu on the left, select Library >> Policy >> Transportation. Under TPB, TPPS is the commercial carrier payment process allowing US Bank to pay the carrier upon notice of delivery. In turn, US Bank is reimbursed by the Defense Finance and Accounting Service (DFAS) after the TO certifies the TPPS Summary Invoice (PSI). This commercial payment process is applicable to carriers, brokers, and third party logistics providers. Refer to Paragraph 12.1. for TPPS procedures.

12.4.1. All valid AFWCF and SDT/CMA TACs are authorized in TPB. Updates will be provided by message. The DAASC Master TAC Reference Table has been replaced by the Transportation Global Edit Table (TGET). AF TACs are input through the TGET system. The web URL is **https://beis.csd.disa.mil/beis-html/frontpage-pki.html**. User ID and

password are required for access. For assistance with TGET, contact the support desk, e-mail **BEISOPERATIONSSUPPORT@DFAS.MIL.** The TGET system is the authoritative source for all TAC information.

12.5. The GPC may be used to pay for DESPS BPA. Cardholders must coordinate with their TO prior to setting up an account. The TO will provide advice to cardholders when requested. If the purchase card is used without first setting up an account, units will be billed at the higher commercial rate. (Reference: AFI 64-117, Air Force Government Wide Purchase Card (GPC) Program).

12.5.1. Contractor Reference Guide. TOs must ensure they obtain a copy of the DESPS carrier(s) reference guide that provides added guidance. The DoD Domestic Express Small Package Service website is: **https://private.amc.af.mil/A4/domexpress/spsindex.html**.

Chapter 13

CONTRACTOR SUPPORT

13.1. Transportation and Traffic Management Guidance. Transportation and Traffic Management guidance pertaining to contract support is in numerous DOD, Joint Service, Air Force instructions, manuals, and civilian agency directives. TOs provide transportation and deployment and distribution support/training to contracting offices as contained in these publications, to include cargo movement support to government contractors, when designated. The most used publications are listed below:

13.1.1. Federal Acquisition Regulation (FAR), Particularly Parts 8, 12, 13, 42, 47, and 52.

13.1.2. DOD FAR Supplement.

13.1.3. Air Force FAR Supplement.

13.1.4. Title 49, CFR, Transportation.

13.1.5. ICAO/IATA

13.1.6 IMDG

13.1.7. DOD 4500.9-R, DTR, Part II.

13.1.8. MIL-STD-129 and MIL-STD-2073-1

13.1.9. AFI 32-7086

13.1.10. AFI 64-117

13.1.11. AFMAN 16-101, *International Affairs and Security Assistance Management*.

13.1.12. AFMAN 24-204_IP

13.2. Deployment and Distribution Support. TOs provide advice to the contracting officer to include appropriate deployment and distribution and logistics contract language. They also evaluate prospective contractor offers to assist the Procuring Contracting Officer (PCO) in obtaining the most economical and responsive transportation service for the Air Force customer. It is essential that liaison is established between the two offices to produce the best possible contractual instrument, clearly defining packaging and transportation mode/method, documentation and payment.

13.3. Assistance to Contracting. The transportation advisor to contracting must exercise judgment and technical skill in providing advice that will result in transportation terms in the contract or purchase order that are most advantageous to the government.

13.3.1. Depot-level Reparable Shipments. For AFWCF depot-level reparable shipments, door-to-door commercial express carrier movement should be contracted/arranged with the contractor source as part of the process. This supports Agile Logistics principles.

13.3.2. Air Force contracts with private contractors (vendors), must include in statements of work the requirement to transmit electronically shipping information in formats capable of interfacing with DOD data systems (see 13.4.4.3).

13.3.3. Specific contract language will vary depending on the delivery terms stated in the contract, e.g., where government ownership occurs ("Free on Board [FOB]").

13.3.3.1. Early government ownership begins at FOB origin, Consolidation Containerization Point (CCP) or Aerial Port of Embarkation (APOE) and drives the transportation clauses in the contract to mirror DOD shipments and requires specific DTR documentation and MILSTD labeling and markings.

13.3.3.2. Pure direct vendor delivery (DVD) contracts (FOB destination, prepay and GPC) have no actual commercial need for military standards-based documentation and marking. However, it is necessary to establish a minimum set of requirements for these shipments in order to: 1) ensure proper processing at destination Supply Support Activity (SSA), 2) integrate DVD shipments directed into the Defense Transportation System (DTS) in the event of crisis or contingency, or 3) generally support DOD ITV requirements. Refer to DTR, Part II, Chapter 201. See 13.4.4.

13.4. Assistance to Contracting and GPC holders. The Contracting Officer will establish the best possible contractual instrument, clearly defining training requirements (i.e. Contracting (AF Form 9) and Government Purchase Card (GPC)). Incorporate packaging and transportation mode/method/documentation and payment in this training based on the advice of a transportation advisor. This transportation advisor to contracting must exercise sound judgment and possess technical skill in providing advice that will result in transportation that is most advantageous to the government. All transportation costs (including, but not limited to, commercial, AMC, MSC and SDDC), for items purchased on O&M funds using an AF Form 9 or micropurchases using the GPC are the responsibility of the ordering unit. The cost of transportation should be included as part of the contract/purchase price. Use of USPS and small package carriers via the door-to-door delivery method from the vendor to the ultimate commercial address of the customer are the preferred mode/method for shipping. OCONUS shipments must comply with all packaging, marking, and documentation/advanced clearance and destination host nation custom clearance requirements required by the DTR, Part II. See Chapter 7 for guidance in establishing funding. See the AF Knowledge Now Cargo Movement CoP, **https://afkm.wpafb.af.mil/community/views/home.aspx?Filter=OO-LG-TR-A1**, for sample procedure letters, Contracting/GPC card holder worksheets, vendor shipping instructions, and TCN/TAC rosters. Below are the shipping options available to assist TOs in providing sound advice to their installation Contracting Officer:

13.4.1. First, except as directed to acquire supplies in the order of priority established in FAR 8.002, *Priorities for Use of Government Supply Sources*, cardholders should consider transportation costs in the total acquisition cost of supplies. Items purchased locally may result in significant cost avoidance when compared to purchasing from CONUS sources when shipping costs are considered. Overseas bases should check for in-theater GSA stores, such as in Hawaii, Alaska, and Kaiserslautern, Germany.

13.4.2. Second, of the items that must be purchased within the CONUS, determine if the cargo is small enough for shipment with the United States Postal Service (USPS), the most economical mode of shipment.

13.4.2.1. Ship packages prepaid parcel post to your unit's official APO mailing address. The maximum USPS weight and size limits are 70 pounds/108 inches in length and girth combined for Priority (7-10 day transit time) and 70 pounds/130 inches length and girth

for Parcel Post (10-20 day transit time). Return receipt (certified or registered) is recommended for traceability purposes.

13.4.3. Third, the customer may choose to ship via a small package carrier via Free on Board (FOB) Destination terms to the ultimate commercial overseas address. Contractor Prepaid Shipping Instructions: funding these shipments should be all inclusive in the contract verbiage or must be paid with the GPC. The MAJCOM/base financing procurement of assets with O&M funds on an FOB Origin basis must fund the transportation with its O&M-type funds.

13.4.3.1. Shipments of prepaid shipments that are within size and weight limitations of a small package carrier must move by the least costly carrier based on misson requirements. Any direct charge for prepaid cost will be listed as a separate item on the invoice for the supplies shipped. Submit a copy of the transportation or freight bill with the invoice for cost verification. Failure to provide a copy of the paid freight bill may result in the contractor not being fully reimbursed for freight charges. Contractors shall not divide quantities into small parcels to avoid shipment by other modes of transportation (FAR 42.1401-1(a)). Contractors shall not insure shipments at Government expense for the purpose of recovery in case of loss or damage, except where minimum insurance is required for the purpose of obtaining receipts at point of origin and upon delivery (FAR 42.1404-1(d)).

13.4.4. Fourth, if the shipment must move using AMC, MSC or SDDC services, the ordering unit's base TO will assist cardholders by providing information on customs clearance, packaging, marking and DTR, Part II, documentation/advance clearance requirements for the vendor to follow. Special Clauses under the FAR Part 12 are required to be used when shipment is to be performed through other than commercial transportation, such as the DTS. Do not make shipments without contacting the TO.

13.4.4.1. For any cargo moving through the DTS, a TAC is required to pay for transportation charges such as port handling and transoceanic movement. (see 7.3.4.1). The TAC is required on the Contracting/GPC Transportation Support Worksheets, reference para 13.4. Some installations have base wide TACs established which must be revalidated every fiscal year through AFGLSC. If the installation or your group/unit has a TAC established the TAC owner must approve its use by signing the worksheets.

13.4.4.2. Shipments NOT within size and weight limitations: Provide all applicable information on the transportation support to contracting and GPC card holder worksheets to the distribution section at your installation. Unit must also fund for the cargo to be shipped to the port of entry. Unit is responsible to ship the cargo prepaid by surface and add the costs as separate billing item to the invoice to the CCP or port for entry into the DTS. Annotate the bill of lading "Transportation under this tender is for the U.S. Department of Defense and the actual total transportation charges paid to the carrier(s) by the consignor or consignee are assignable to and are to be reimbursed by the Government." Also, describe the freight on the bill of lading using the Harmonized Code **https://www.webflis.dlis.dla.mil/WEBFLIS**/ to determine the most descriptive nomenclature based on, NSN, part number, and other data presented by supply activity or vendor. Provide a copy of the paid freight bill with the invoice. Failure to properly annotate the bill of lading, failure to use low-cost carrier provided or approved by the TO,

and failure to provide a copy of the paid freight bill may result in the contractor not being fully reimbursed for freight charges. NOTE: Outsized cargo: Contact TO at least 5 workdays prior to movement on less-than-truckload quantities (under 10,000 pounds) and 14 days prior to shipment on truckload quantities (10,000 pounds or more). Upon request, contractors must submit a DD Form 1659, Application for U.S. Government Shipping Documentation/Instructions to the cognizant TO.

13.4.4.3. Once worksheets are received by your installation distribution section, they will process the documentation and provide: the Requisition and Invoice/Shipping Document (DD Form 1149), Military Shipping Label (DD Form 1387), Transportation Control and Movement Document (DD Form 1384), vendors instructions, and will assist the unit in clearance of cargo through the DTS ports of entry. The unit/shipper is required to then send all the documentation to the vendor by any means possible (e.g. Facsimile, scan and e-mail or postal). Once the vendors receive the documentation they must follow the instructions for packaging, marking and labeling. **NOTE**: Shipments destined for an AMC terminal (e.g. McGuire or Travis) require that Air Force contracts with private contractors (vendors) include in statements of work, the requirement to transmit shipping information electronically in formats capable of interfacing with DOD data systems. The on-line logistics tool at **https://lsotools.wpafb.af.mil/atcmd** managed by the Air Clearance Authority (ACA) will allow vendors to transmit the Advanced Transportation Control and Movement Document (DD Form 1384) for clearance of the cargo. Units must plan their contracting/GPC purchases accordingly. These procedures are required to ensure property is identified correctly and delivered to the customer without delay.

13.4.4.4. Packaging, Marking and Labeling. Guidance for requirements for uniform military marking for shipment and storage is found in MIL-STD-129. Guidance for determining the applicability of commercial or military packaging is found in MIL-STD-2073-1.

13.4.5. **NOTE:** IAW AFI 32-7086, GPC card holders are required to receive approval from the Hazardous Materials Pharmacy before the unit purchases the hazardous material. Once approved the vendor is responsible for completion of the Shipper Certification to the port of entry in addition to the international transportation mode (e.g. a shipping paper, 49 CFR as well as a hazardous declaration or Multi-modal declaration (AFMAN 24-204_IP, IATA/ICAO or IMDG)). Federal and military regulations require the shipper to certify that hazardous materials are properly identified, described, packaged, marked, labeled, and in proper condition for transportation. Depending on the mode/method or whether the shipment moves by commercial or by military transportation, the specific language may vary and specific forms may be prescribed. At no time will classified, sensitive, explosive, or any NWRM items be purchased with the GPC.

13.5. NWRM Movement Reporting Requirement for Performance Work Statement (PWS). Organizations developing requirements documents for the shipment of NWRM shall include the following paragraphs in all performance work statements or statements of work.

13.5.1. Outbound Shipments.

13.5.1.1. Report of Shipment (RESHIP). The contractor shall send a REPSHIP to the destination transportation officer IAW FAR 52.247-68 and the Defense Transportation Regulation (DTR) Part II, Chapter 204. For NWRM, the contractor shall complete the

following additional actions: (1) Confirm consignee receipt of REPSHIP; (2) Record the date/time and name of consignee POC when confirmation is complete and maintain with the consignor copy of shipping papers; and, (3) Confirm consignee receipt of shipment (by telephone call or carrier delivery transaction) and maintain the confirmation with the consignor copy of shipping papers.

13.5.1.2. NWRM E-mail. Within two hours (CONUS) and eight hours (OCONUS) of shipment departure, the contractor shall send an e-mail to the origin and destination NWRMAO/MASO organizational email account, consignee receiving, the IM and 735 SCMG or AFSPC/LSC as appropriate. The e-mail will contain the movement document number and transportation control numbers (TCNs) of the shipment. E-mail addresses can be found in SharePoint at HTTPS://cs.eis.af.mil/afmunitions/nmc2/nwrm. The contractor shall request a SharePoint account by contacting the ESD at DSN 945-2900 or via email at lackland.esd@us.af.mil. Access to this SharePoint site requires a DOD Common Access Card (CAC).

13.5.1.3. Common Access Cards (CACs) for Contractor Personnel. The contractor shall ensure CACs are obtained for authorized contract or subcontract personnel IAW AF policy. Written requests shall be submitted to the contracting officer.

13.5.1.4. In-transit Visibility (ITV). For In-transit Visibility (ITV), the shipping contractor must ensure NWRM shipments are released in the shipper system prior to the carrier's departure.

13.5.2. **Inbound Shipments.**

13.5.2.1. The contractor shall acknowledge receipt of NWRM with the origin shipping office.

13.5.2.2. The receiving contractor shall notify the gaining and losing NWRMAO or MASO, 735 SCMG, and/or AFSPC/LSC via e-mail within 2 hours (CONUS) and 8 hours (OCONUS) of receipt of NWRM. The e-mail will include at a minimum the shipment TCN, total quantity received and individual S/Ns as listed on the DD Form 1348-1.

13.5.2.3. If discrepancies are found the receiving contractor shall notify the origin shipping office as well as the shipping and receiving NWRMAO/MASO through official e-mail within 24 hours of the discrepancy detection.

Chapter 14

MANAGEMENT OF MODULAR, INTERMODAL CONTAINERS AND 463L ASSETS

14.1. ISO Shipping Container Management Responsibilities.

14.1.1. HAF/A4 has overall responsibility for the AF ISO Shipping Container Management Program. They will establish AF policy on the use, care and maintenance of AF Shipping Containers. As prime member of USTRANSCOM Joint Intermodal Working Group, they will represent the AF on Intermodal Shipping Platform Issues and will ensure the AF accounts for its containers IAW DTR 4500.9-R, Part VI.

14.1.2. AFGLSC will assist the HAF as alternate AF members of the JIWG and act as the AF Container Manager. They will ensure the AF Container program outlined in the DTR Part VI and this AFI is carried out, AF ISO shipping container accountability and movement is recorded in Army Container Asset Management System (ACAMS) and AF Biennial ISO Container Inventories are completed effectively.

14.1.3. MAJCOM A4s will assign a Container Control Manager (CCM) within their staff. They will ensure AF bases and activities (Program Offices, LRS, AMMO, APS, Medical, War Reserve Material activities) in their command have adequate Container Control Officers assigned to manage the day-to-day movement, maintenance and reporting of ISO shipping containers.

14.1.4. Distribution Sections (LGRDD/TROCD) have primary responsibility at their installations for management of ISO containers and chassis system assets. As SME for containers, they will ensure containers are purchased, inspected, tracked and maintained IAW DTR Part VI. They will ensure that programs at their installations (i.e., War Reserve Materiel, Medical Group) that own ISO containers have a CCO assigned and are managing their containers in ACAMS. They will conduct an annual physical verification of ISO containers on installation and ensure their CCOs participate in the DoD Biennial ISO container Inventories and completely account for all ISO containers IAW DTR Part VI.

14.2. ISO Shipping Container Management

14.2.1. New container requirements. Before purchasing ISO containers, CCOs will notify the AF Container Manager (401 SCMS/GUMA) to determine if other containers are available within the DOD. New purchases will be made IAW DTR, Part VI, Chap 602.

14.2.2. Container Maintenance. Base level CCOs will ensure completion of Convention for Safe Container (CSC) inspections on their containers. Inspection reports will be consolidated at the base LRS CCO who will forward reports to the MAJCOM CCM. They will forward consolidated reports to the AF Container Manager. Base CCOs will budget for their own projected maintenance, purchase and lease requirements. Information to obtain CSC inspection certification can be obtained at **http://ammo.okstate.edu/Courses.htm**.

14.2.3. ISO Container Accountability. CCOs will ensure they account for all their containers (AF owned or leased) within the Army Container Asset Management System (ACAMS) maintained by AIDPMO (Army Intermodal Distribution and Platform Management Office) . CCOs will update ACAMS whenever their organization purchases, transfers or disposes of their containers. Also, whenever containers are shipped their

movements will be tracked within ACAMS. CCOs should work with AIDPMO to ensure they have properly accounted for their containers and to gain access to ACAMS.

14.2.4. Leased Container Management. The TOs will manage leased containers IAW DTR 4500.9-R, Part VI, Chapter 602, and are responsible for issuance of Container Movement Reports (CMR) using the Container Management Support Tool (CMST) IAW DTR, Part VI, Chapter 605. Before leasing ISO containers, CCOs will notify the AF Container Manager (401 SCMS/GUMA) to determine if other containers are available within the DOD.

14.2.5. Other ISO container information. When new container designs are being considered the CCO will ensure customer's requirements are vetted with the ASC/ENFA IAW DoDI 4540.7.

14.3. Non-USAF owned/common-use containers and MILVANs. Regardless of storage location, the LRS CCO is responsible for inventory management, serviceability, accounting, and tracking of all non-USAF owned containers, common-use containers, and MILVANs on the installation including Army owned, common-user pool containers.

14.3.1. In the event Army owned, common-user pool, or MILVAN containers are to be used for a shipment, the TOs is responsible for ensuring serviceable CSC certified containers are provided to cargo loading and packing activities regardless of commodity.

14.4. Munitions Containers. To prevent unacceptable delay in support of munitions containers and unnecessary costs to AF Containerized Ammunition Distribution System (CADS) operations all requests for munitions containers will be annotated with "CSC certified CAT-V Ammunition Type Containers" on the request documentation.

14.4.1. Explosive safety requirements must be considered when evaluating whether empty common-use intermodal containers may be stored in the MSA. Consult AFMAN 91-201, *Explosive Safety Standards* and the wing safety office.

14.5. Outbound Container Shipments. On outbound container shipments the unit requesting movement will provide the TO the required quantity of containers. TOs will determine if containers are available on the installation or will order required containers. If containers are available on the installation, TOs will appropriate containers to the loading/packing organization. The organization performs an acceptance inspection to ensure they meet CSC certification.

14.5.1. The leasing/loading/packing organization will reject unserviceable containers and report them to the TOs for pick-up/replacement. The TOs will order any replacement containers needed and coordinate repairs as required. Upon shipment a CMR will be issued in CMST.

14.6. Inbound Container Shipments. TOs will notify the units of inbound shipments.

14.6.1. In conjunction with TOs, the receiving organization will develop an intermodal container receipt and download plan to ensure timely return of containers to TOs control.

14.6.2. After intermodal containers are emptied of their cargo and packing materials, the unpacking organization will report container information/status (ready for pick-up) to the TOs.

14.6.3. The TOs will move empty containers to a transportation holding area or ship containers off the installation as required and issue a CMR in CMST to update container location status. If the containers are leased assets, TOs will take action to terminate the lease upon contractor pick-up from the facility and ensure AMS data is updated.

14.7. Defective Containers. TOs is responsible to fund for repairs to DoD owned containers not to exceed $300. Repairs will be conducted through an authorized repair service/facility. The TO will coordinate repairs over $300 with AIDPMO to have containers sent to a repair facility.

14.7.1. Receiving units will be responsible to perform an acceptance inspection to ensure assets meet their requirements at time of delivery. Defective containers will be rejected **Note:** Leased containers will only be repaired if a requirement exists for container use and no other containers are available. Any repair will be coordinated with the lessor IAW DTR, Part VI, Chapter 604.

Note: Repair of CADS containers will be accomplished IAW DTR, Part VI, Chapter 604.

14.7.2. The AF will transfer ownership of containers to AIDPMO when AF "Ammunition Grade" containers under the control of Joint Munitions Command are deemed Beyond Economical Repair (BER) IAW DTR, Part VI, Chap 604. For example, when BER costs exceed the Maintenance Expenditure Limit established by the DOD to bring containers back into an "Ammunition Grade" status. After accepting ownership, AIDPMO may elect either to repair the containers locally for "general cargo" use or salvage (DRMS) the containers at no cost to the Air Force.

14.8. ISU 60//90 Management. Management of ISU 60/90 containers (i.e. Cadillac Bins) is the responsibility of the owning/purchasing unit and these assets shall be managed IAW DoDI 5000.64, *Accountability and Management of DoD-Owned Equipment and Other Accountable Property*. When determined by the owning/purchasing unit that maintenance/repair requirements for these containers are beyond its capability, assistance can be obtained through the appropriate depot management activity or local contractor.

14.8.1. Requests for depot maintenance support of ISU 60/90 containers can be submitted to OO-ALC/GHSF & GHSCC at Hill Air Force Base, UT. An AFTO Form 227 will be prepared by the using or maintaining organization. Completed AFTO Forms 227 will be forwarded to 00-ALC/GHSF for distribution to the depot management activity or in accordance with the current year's data call, whichever comes sooner.

14.8.2. TOs will provide guidance to units on obtaining Airlift Eligibility certification from Air Transportability Test Loading Agency for ISU 60/90 containers before the unit purchases new containers. (reference para 1.2.2). TOs in coordination with Material Management/Equipment Management will issue periodic guidance to units that the proper NSNs and ERRC codes must be uploaded into the Air Force Equipment Management System (AFEMS) for accountability/inventory purposes on new purchases, disposal action, etc. Updates/changes in AFEMS are to be provided to the MAJCOM CCO.

14.9. 463L Asset Management. Instructions for management of 463L equipment is contained in the DTR, Part VI and specific Air Force guidance is provided in AFI 24-114, Small Terminal Operations, Chapter 1, paragraph 1.5.

14.10. RFID Procedures. RFID procedures for containerized and palletized shipments are contained in Chapter 18 of this publication.

Chapter 15

AIR FORCE PACKAGING TECHNOLOGY & ENGINEERING FACILITY (AFPTEF) CHARTER

15.1. AFPTEF Mission. The mission of the Air Force Packaging Technology and Engineering Facility is to satisfy our customers' PHS&T needs in times of peace and war; to assure dynamic technical and engineering progress in container design and packaging concepts; to provide container design, fabrication, testing and evaluation services, and the delivery of container procurement data packages and production drawings; to provide consultation and customer support to Air Force and other federal agencies, which includes but is not limited to, the identification of requirements, contract support for container purchases, and program reviews; to serve as the Air Force representative in DOD and industry standardization groups on packaging engineering issues; to provide engineering testing and analysis for certification of hazardous material containers; and to perform lead service testing and evaluation for cushioning materials. Contact AFPTEF for assistance at: 403 SCMS/GUEB, 5215 Thurlow St., Ste. 5, Bldg. 70C, Wright-Patterson AFB OH 45433-5540, DSN: 787-3362, Commercial: 937-257-3362, DSN FAX: 986-1350, Commercial Fax: 937-656-1350. Detailed information on AFPTEF services is provided on the AFPTEF website at: **http://www.packweb.wpafb.af.mil**.

15.2. Responsibilities of HQ USAF.

15.2.1. Provide policy, direction, and guidance to ensure that all AF MAJCOMs utilize AFPTEF's services to minimize costs and maximize program benefits.

15.3. Responsibilities of Major Commands.

15.3.1. Ensure that all new requirements for container design, fabrication, testing, and packaging support are forwarded to AFPTEF for review of adequacy and cost effectiveness.

15.3.2. Use AFPTEF for container engineering, design, fabrication, testing and evaluation, in lieu of contracting the work out, to reduce overall project cost.

15.3.3. Identify and report to AFPTEF any problems with current containers, packaging/preservation methods, packaging/preservation materials or their application for items in or entering into the AF inventory for evaluation and resolution.

15.3.4. Secure AFPTEF's approval before implementing new container design concepts, obtaining test equipment, using new packaging materials not previously approved for AF use, or introducing new packaging techniques for protection of items entering the Air Force inventory.

15.3.5. Ensure that available AFPTEF capabilities and equipment are not unnecessarily duplicated.

15.3.6. Provide AFPTEF with packaging information developed within the command. This includes copies of developmental studies and reports received from contract or organic sources.

15.3.7. Provide AFPTEF with general cost avoidance data when using AFPTEF's assistance.

15.3.8. Participate and assist AFPTEF in the field and service testing of new materials, equipment, procedures, and container design concepts.

15.4. Responsibilities of Air Force Global Logistics Support Center (AFGLSC).

15.4.1. Support the mission and responsibilities of AFPTEF.

15.4.2. Manage and direct AFPTEF consistent with Air Force Policy Directive 24-2 and this instruction.

15.4.3. Provide personnel, funding, and facilities necessary to accomplish the AFPTEF mission.

15.5. Responsibilities of AFPTEF.

15.5.1. Provide total life cycle support (including technical guidance, direction, engineering, and testing) to Air Force and other DOD activities for containers and packaging.

15.5.1.1. Maintain an all inclusive, in-house packaging, packaging material, and container testing facility.

15.5.1.2. Act as DOD Lead Service Activity per AFMAN 24-206_IP.

15.5.2. Design, develop, test, research, and evaluate containers, packing materials, packing methods, systems, techniques, and preservation methods.

15.5.2.1. Assign identification number, priority, and target completion date for each project.

15.5.2.2. Provide project findings and recommendations to project initiator in a timely manner, to ensure that established requirements have been met.

15.5.2.3. Coordinate project efforts with other activities having management or technical involvement.

15.5.3. Consider environmental impacts, Occupational Safety and Health Act (OSHA) requirements, distribution environment, and costs in performing container/packaging standardization, engineering projects, and studies.

15.5.4. Serve as custodian, review activity, or preparing activity for those assigned military and industry standardization and specification documents and T.O.s directly related to containers, packaging/preservation materials and methods or processes.

15.5.4.1. Act as the AF representative in DOD and industry standardization groups.

15.5.5. Review and coordinate requests from Air Force activities for the selection and design of specialized long life containers, and for the selection of new multi-application containers. Review and approve any specifications and statement(s) of work before units procure new long life container designs. Recommend approved multi-application containers with potential high use for inclusion in MIL-STD-2073-1.

15.5.6. Review and coordinate requests from Air Force activities (IAW 15.3.5 above) for equipment to support in-house packaging evaluation, development, and testing.

15.5.7. Establish and maintain channels to promote the exchange of technical packaging information between organizations in the Air Force, the DOD, the federal government, and industry.

15.5.7.1. Establish and maintain a website to act as the main channel for information sharing.

15.5.7.2. Conduct technical seminars for exchange of data on new developments and requirements.

15.5.7.3. Establish and maintain centralized technical packaging information files to include packaging drawings, studies, and related scientific and engineering data.

15.5.8. Provide management and technical guidance and support to the AFGLSC illustrators on the computer aided design systems (CADS) and Special Packaging Instructions (SPI).

15.6. Procedures for Requesting AFPTEF Mission Support.

15.6.1. Contact an AFPTEF representative to discuss your program's special requirements by:

15.6.1.1. Visiting our website at **http://www.packweb.wpafb.af.mil** and e-mailing the AFPTEF webmaster.

15.6.1.2. Calling DSN 787-3362 or Commercial 937-257-3362.

15.6.1.3. Submitting a written request for support to the address above (para 15.1).

Chapter 16

TRAINING

16.1. Training Requirements. Thorough training of personnel is essential to ensure Logistics Readiness organizations can perform their missions effectively. Each LRS/APS commander must ensure personnel in their organizations are adequately trained in Air Force packaging and cargo movement methods and procedures. This chapter is intended to centralize information about available training related to packaging and cargo movement but is not all inclusive. Recommendations to expand and improve this information should be passed to 401 SCMS/GUMA (AFGLSC).

16.2. Defense Ammunition Center (DAC) Military Packaging Training. DAC, McAlister, Oklahoma, provides military packaging training. Enrollment for these courses remains with the MAJCOM and AETC. DAC packaging courses are tuition free for military and civilian employees of DOD. Non-DOD employees will be charged the appropriate tuition cited by DAC. For additional information on DAC services, courses and enrollment, visit their web site at: **http://ammo.okstate.edu**.

16.2.1. Resident Instructor-Led Training. Contact DAC for course listings. Courses offered:

16.2.1.1. Course Number PACK-1A-DL or L5AZA2TO5104AA, Military Preservation and Packaging for Storage and Shipment (Web-Based).

16.2.1.2. Course Number PACK-1B or L5AZA2TO71OOAB, Military Preservation and Packaging for Storage and Shipment (80-hours Instructor Led).

16.2.1.3. Course Number PACK-16, Defense Packaging Design (80-hours Instructor Led).

16.2.1.4. Course Number Ammo-62, Technical Transportation of Hazardous Materials.

16.2.1.5. Course Number Ammo-37, General Transportation of Hazardous Materials.

16.3. Local Training.

16.3.1. Training Template on Container Reuse and Marking Obliteration. This template is prepared as a guide for military, civilian or contractor Deployment and Distribution Flight personnel to provide local training for personnel performing packaging functions related to inspection, shipment and storage operations. Use the training template found at https://spires.wpafb.af.mil/cfm/TrainingTemplateOnContainerReuse.doc to develop local training tailored to container reuse and marking obliteration.

16.4. TPPS Training. US Bank offers a TPPS training program for TPPS system users and administrators. 401 SCMS/GUMAB is also a source of training on the TPPS system. Units must request training support through their MAJCOM counterparts.

16.5. Shipment Funding Training. TOs must provide the required training for their designated personnel to fully understand the correct shipment funding obligations. An annual AFGSC Training Symposium sponsored by 401 SCMS/GUMAB provides overall TPPS and Air Force Funding training opportunities. These personnel must be trained to:

16.5.1. Distinguish between AFWCF and non-AFWCF cargo movements and correctly use the funding categories for these shipments.

16.5.2. Use the customer provided funding appropriation or local base O&M funds to move shipments when the base level supply system has not assigned a TAC or for non-MILSTRIP shipments.

16.5.3. Consolidate shipments (e.g., consolidate only shipments charged to the same TAC or funding appropriation).

16.6. CMOS Training. Go to: **https://www.gunter.af.mil/il/ilr/ilrc/documents.aspx**. Click on "Training" link.

16.7 Lackland AFB Transportation Course Listing. Go to: https://wwwmil.lackland.af.mil/orgs/37trg/345trs/Transportation/Courses.asp.

16.8. Convention for Safe Container (CSC) inspection course. Go to: **http://ammo.okstate.edu**/. The Ammo-43 Intermodal Dry Cargo Container / CSC Reinspection Course qualifies personnel to inspect and certify safety of inter-modal containers for intended purpose before use. Installation agencies that use 20/40 foot containers need to ensure they have personnel trained for this purpose. See Chapter 14.

16.9. Additional Training Links and Opportunities. Additional training links and opportunities are posted to the Cargo Movement Community of Practice (CoP) and to the Packaging CoP. The URLs for these websites are as follows: Cargo Movement CoP: https://afkm.wpafb.af.mil/ASPs/CoP/OpenCoP.asp?Filter=OO-LG-TR-A1Packaging CoP: https://afkm.wpafb.af.mil/ASPs/CoP/OpenCoP.asp?Filter=OO-LG-PM-PK

Chapter 17

SAFETY

17.1. Operational Risk Management (ORM). Where situations exist that do not appear to be adequately covered by this instruction, commanders and deployment planners at all levels will use ORM to assess risk associated with those situations and determine adequate safeguards or procedures to manage the risk. ORM guidance, definitions, techniques, and tools are found in AFI 90-901, *Operational Risk Management* and AFPAM 90-902, *Operational Risk Management (ORM) Guidelines and Tools*.

17.2. Hazards. All managers and supervisors must incorporate Operational Risk Management (ORM) within the workplace. Identify, eliminate or control, and document hazards to minimize risk associated with uncertainty in the decision-making process. Managers and supervisors at all levels must recognize the sources of hazards and apply appropriate safety practices to avoid injuries to personnel and damage to equipment by following Wing established procedures and directives, asking for help when needed, and using the appropriate personnel protective equipment (PPE) IAW AFOSH-STD-91-501, *Air Force Consolidated Occupational Safety Standard*.

17.3. Hazard Abatement Program. Implement and follow the Air Force Hazard Abatement Program to protect all Air Force personnel from work-related deaths, injuries, and occupational illnesses. Under this program, personnel identify potential hazards within the work environment. After hazards have been identified, determine the adequacy of current directives and procedures, provide appropriate training to affected personnel, and provide a method to track and control the training and hazard correction/abatement processes. See Attachment 1 for appropriate AFOSH standards, TOs, and other applicable directives. Document safety plans, actions, hazards, and personnel training with the appropriate AF forms listed below.

17.3.1. AF Form 3, *Hazard Abatement Plan*; AFI 91-301, *USAF Occupational and Environmental Safety, Fire Protection and Health (AFOSH)Program*.

17.3.2. AF Form 55, *Employee Safety and Health Record*; AFI 91-301.

17.3.3. AF Form 457, *USAF Hazard Report*; AFI 91-202, *USAF Mishap Prevention Program*.

17.3.4. AF Form 1118, *Notice of Hazard*; AFI 91-301.

17.4. Air Force Mishap Prevention Program. Implement and follow the Air Force Mishap Prevention Program to protect Air Force resources. All Air Force personnel have the responsibility under the mishap prevention program to identify workplace hazards, to include equipment and environmental situations that places Air Force personnel, equipment, or facilities at risk. After hazards have been identified, assess the risks associated with each hazard, determine and take action(s) needed to reduce the risk by: engineering the hazard out; or imposing procedural actions (operational limits, frequent inspections, protective equipment, or stopping until corrective action is taken); and/or educating and training personnel on the hazards and the safety procedures to be followed to reduce the chances of a mishap occurring. See Attachment 1 for appropriate AF instructions, AFOSH standards, TOs, and other applicable directives. Ensure all personnel receive safety, fire protection, and health on-the job training

upon initial assignment and whenever there is a change in equipment, procedures, processes or safety, fire protection, and health requirements. Well-trained and educated personnel are the greatest deterrent to mishaps in the workplace. Supervisor's document safety-related training on AF Form 55, *Employee Safety and Health Record*, or other form/automated system approved by the Chief, Ground Safety, IAW AFI 91-301.

17.5. Safety Inspections. Accomplish hazard assessment and identification through the application of occupational safety, fire prevention, and health inspections, evaluations, and surveys. Supervisors perform self-inspections to assess the safety environment of the unit. Most AFOSH standards contain sample checklists for unit self-inspections. Also, use locally developed checklists tailored to specific unit requirements. Wing or base-level safety, bioenvironmental engineering, fire protection, and environmental inspectors conduct unit inspections, evaluations, and surveys according to AFI 91-301 and AFI 32-7086, *Hazardous Materials Management*.

17.5.1. Occupational Safety and Health Administration (OSHA) officials, as representatives of the Secretary of Labor may conduct inspections of nonmilitary-unique workplaces and operations where Air Force civilian personnel work. (The inspections may be unannounced). OSHA inspectors may question or privately interview any employee, supervisory employee, or official in charge of an operation or workplace.

17.5.2. Federal OSHA officials may perform OSH inspections of Air Force workplaces in areas where the US holds exclusive federal jurisdiction (including government owned contractor operated facilities).

17.5.3. State OSHA officials, operating under a federally approved plan and subject to the terms of any variance, tolerance, or exemption granted by the Department of Labor, may enforce state OSHA standards in contractor workplaces. At overseas locations, local government agencies may conduct inspections of contractor facilities or operations as stipulated in the status of forces or country-to-country agreement IAW AFI 91-301.

17.6. General Safety Guidance. Packaging and preservation personnel are exposed to a large variety of hazardous situations, machinery, equipment, and chemicals. Most hazardous situations can be avoided by simply following procedures, asking for help when needed, and using personal protective equipment (PPE). Supervisors must be knowledgeable of the AFOSH Standards, TOs, and AF instructions applicable to their operations and ensure their personnel are educated on the safety requirements applicable to the job. Personnel work more safely and effectively when properly trained and motivated. For example, ensure personnel who work with hazardous chemical are trained as outlined in AFOSH-STD-91-501 on personal protective equipment.

17.6.1. Use the general work center safety guidance in AFOSH-STD 91-66, *General Industrial Operations*, and local instructions. Follow AFOSH-STD-91-66 for safe practices in operation and maintenance of base facilities, such as, buildings and grounds, general housekeeping, ladders, office safety practices, emergency eyewash and showers, and finger ring policies. It also addresses safety precautions for electrical facilities and electronic equipment, such as, electrical emergency equipment, protective equipment, fire prevention, cardiopulmonary resuscitation (CPR), first aid training, clothing and jewelry. It also contains guidance for tool safety, material handling, fall protection, housekeeping, and operation and maintenance of compressed air systems.

17.7. Work Safety Guidance. Follow safety guidance found in AFOSH-STD-91-66 and equipment TOs. AFOSH-STD-91-66 contains safety guidance for general housekeeping and office safety principles. See Attachment 1 for AFOSH standards applicable to packaging and preservation activities.

17.7.1. Adhere to AFOSH-STD-91-501 for requirements on safe operation, inspection and maintenance of industrial machinery. Packaging and preservation personnel must inspect equipment prior to use. Supervisors are required to instruct machine operators on the proper use, inspection, maintenance and documentation requirements. Industrial machines will be scheduled for preventive maintenance (inspection and minor maintenance) on a weekly basis, the AFTO Form 244, **Industrial/Support Equipment Record**, will be used to document inspection and maintenance action requirements and accomplishments. Documentation will be accomplished using T.O. 34-1-3, *Machinery and Shop Equipment*.

17.8. Flight Line Driving. Motor vehicles operating on the flight line present a clear and possible danger to aircraft, equipment, and ground personnel. Guard against carelessness, haste, and disregard of safety standards. These factors are the primary sources of collisions and personnel injury. All operators of vehicles on the flightline must first obtain training and possess a valid flightline driving permit. Follow the general safety requirements for flight line vehicle operations found in AFOSH-STD 91-100, *Aircraft Flight Line Ground Operations and Activities* and AFJMAN 24-306, *Manual for the Wheeled Vehicle Driver*, AFI 13-213, *Airfield Management and Base Operations*, and local instructions. Familiarize all personnel authorized to operate vehicles on the flight line with the aircraft marshaling signals found in AFI 11-218, *Aircraft Operations and Movement on the Ground.*

17.9. Warehouse Entry/Exit. Driving in and out of warehouses, the basic rule is to blow horn upon entering and exiting building. A spotter will be used if the operator's vision is obscured by the load. Refer to AFOSH 91-46, Material Handling and Storage Equipment.

17.10. AFOSH Guidance. Use AFOSH standards where federal standards either do not exist, do not adequately cover a function, contain less stringent criteria, or when consolidation of information is beneficial for use in the workplace. Use Air Force functional directives and technical data in conjunction with AFOSH standards. If conflicting guidance exists, the weapon system specific technical data will take precedence. See Attachment 1 for AFOSH standards applicable to packaging and preservation activities.

17.11. Hazardous Energy Control (Lockout and Tagout). Use of procedures to isolate machinery or equipment (in off-equipment areas) from all potentially hazardous energy shall be implemented IAW AFOSH-STD 91-501. When the unexpected energizing, startup, or release of stored energy could cause injury, machinery or equipment is locked out or tagged out before qualified personnel perform any servicing or maintenance. Instruct all personnel in the safety significance of lockout or tagout procedures. Additional guidance for instituting an effective program for Hazardous Energy Control (Lockout and Tagout) and Mishap Prevention Signs and Tags is found in AFOSH-STD 91-501, Chapter 21.

17.12. Safety Equipment. Hazards should be engineered out, isolated, guarded against or a safer chemical used as a substitute whenever possible before considering the use of personal protective equipment (PPE). PPE devices alone should not be relied on to provide protection against hazards, but should be used in conjunction with guards, engineering or administrative controls. When PPE is required, ensure personnel are provided the appropriate PPE for the hazard and are trained in its use, inspection and care. Contact the installation ground safety or bioenvironmental engineering staff for assistance in the selection of PPE. Review AFOSH-STD-91-501 for additional information on personal protective equipment.

Chapter 18

IN TRANSIT VISIBILTY (ITV) REQUIREMENTS

18.1. Introduction. Successful ITV is cargo and/or passenger data received by GTN and links data directly to airlift mission numbers and/or surface transportation mode; truck, train, or ocean vessel. GTN is the designated DOD system for ITV, providing C2 that integrates automated information support to the DOD. The Air Force goal is 100 percent ITV. ITV is a process consisting of designated business procedures to provide accurate source data, prompt nodal updates, shipment status information, and shipment receipt notices. ITV employs various AIS, uses appropriate AIT, and adheres to acceptable standards. The Air Force will realize reliable ITV when accurate source data is flowed through CMOS or, at AMC aerial ports, GATES to GTN, and that flow to GTN meets DOD ITV timeliness criteria. CMOS and GATES feed data to GTN and GTN collects and displays the data to generate ITV.

18.2. ITV Process.

18.2.1. Units initiating movement requirements are responsible for accurately providing all information to establish ITV. Units must prepare accurate automated air manifests using CMOS or, at AMC aerial ports, GATES. This is also applicable to Operational Support Airlift (OSA) aircraft under control of the Joint Operational Support Airlift Center (JOSAC). Movements are not considered complete until ITV has been achieved.

18.2.2. ITV must be maintained at transload location when deploying forces and cargo are transloaded from one aircraft to another at an en route location or intermediate stagin base (ISB) for onward movement to final destination. **NOTE: This process is also applicable to surface to air/air to surface movements.**

18.3. Bar Coding Requirements. Transportation activities will use bar coded DD Form 1348-1 and Military Shipment Labels to facilitate cargo receipt and processing. Bar coding on the 1348-1A can be used to receive cargo from supply and to build consolidated shipments. If pre-positioned data has not been provided from SBSS, the bar coded information can be used to initiate creation of an inbound record. At in-transit points, 2-D TCMD data can be used to populate missing data in WPS, GATES or CMOS. To support reading/writing bar-coded labels, transportation activities will:

18.3.1. Maintain the capability to produce and read bar coded 1348-1As and MSLs.

18.3.2. Maintain sufficient bar code capable printers to support MSL production. Attach labels IAW MIL-STD-129.

18.3.3. Maintain hand held terminal and/or wedge readers to support in-check processes.

18.4. Active RFID Requirements. Transportation activities will use Active RFID to support COCOM visibility requirements as set forth in DTR, Part II, Chapter 208.

18.4.1. Unit move shipments. Active RFID tags will be affixed to unit move pallets, containers, and major end items (e.g., rolling stock, engines, pods, propellers) moving to/from OCONUS locations or moving in CONUS in support of NORTHCOM deployments. To support reading/writing active RFID, transportation activities will:

18.4.1.1. Tags will be affixed IAW MIL-STD 129.

18.4.1.2. Tagging will be limited to a single tag per cargo increment.

18.4.1.3. Origin will always tag deploying vehicles and major end items. Origin will tag 463L air pallets built locally. If cargo is sent to an AMC port for aggregation, origin will provide transportation control and movement data to port, but will not tag cargo.

18.4.1.4. Ensure active RFID docking stations and/or write cables are registered with PM-JAIT. The CMOS RFID registration guide can be found on at https://www.gunter.af.mil/il/ilr/ilrc/documents.aspx. Note that if a docking station and/or write cable is moved (between outbound freight and the DCDF, for example) it must be re-registered.

18.4.1.5. Budget for maintenance and replacement of RFID hardware.

18.4.1.6. Deployment and Distribution Flights will order and maintain sufficient tags to support local exercise requirements as determined by the Installation Deployment Officer (IDO). Tags will be ordered through base supply. The current tag is stock listed as "Model 654 with 128 KB RAM, NSN 6350-01-523-1998". However, units should validate the current tag model/NSN with their MAJCOMs prior to ordering.

18.4.1.7. Installations will order tags to support unit deployments from the central repository maintained by AF AIT PMO using the following procedures.

18.4.1.7.1. Determine total tag requirement for deployment.

18.4.1.7.2. Order tags no earlier than 45 calendar days prior to the projected deployment date. Request tags from Mr Ramirez, 403 SCMS/GUEA, **peter.ramirez@wpafb.af.mil**, DSN 787-7297.

18.4.1.7.3. Account for RFID tags during deployment planning and execution.

18.4.1.7.4. Ensure adequate time is built into the deployment schedule of events to allow tags to be properly affixed to deploying cargo at the cargo deployment function.

18.4.1.7.5. Establish local procedures to receive, store, and maintain tags received at origin.

18.4.1.8. At deployed locations - establish local procedures to recover, store, and maintain tags in working order at deployed locations. If tags in excess of deployed location unit move requirements are collected, request disposition instructions from Mr Ramirez, 403 SCMS/GUEA, **peter.ramirez@wpafb.af.mil**, DSN 787-7297.

18.4.1.9. At deployed locations - apply tags to deploying/redeploying cargo.

18.4.1.10. Collect tags upon redeployment to home station and request disposition instructions from Mr Ramirez, 403 SCMS/GUEA, **peter.ramirez@wpafb.af.mil**, DSN 787-7297.

18.4.2. Sustainment shipments. Transportation activities will tag all originating 463L pallet loads, containers and major end items shipped to, from and between overseas locations. To support reading/writing active RFID, transportation activities will:

18.4.2.1. Tags will be affixed IAW MIL-STD 129.

18.4.2.2. Tags will be applied at the highest level of consolidation done at the installation level (e.g., if you place a major end item in a container, only tag the container).

18.4.2.3. If cargo is sent to an in transit point for aggregation or containerization, origin will provide transportation control and movement data, but will not tag cargo.

18.4.2.4. Ensure active RFID docking stations and/or write cables are registered with PM-JAIT. The CMOS RFID registration guide can be found on at **https://www.gunter.af.mil/il/ilr/ilrc/documents.aspx**. Note that if a docking station and/or write cable is moved (between outbound freight and the DCDF, for example) it must be re-registered.

18.4.2.4.1. Budget for and order tags and batteries to meet sustainment requirements and maintain a stock of active RFID tags for meeting tagging requirements. See paragraph 18.4.1.6 for tag ordering process. On-hand requirements will be established locally, but should be no less than 3-months average volume.

18.4.2.4.2. Budget for maintenance and replacement of RFID hardware.

18.4.2.5. Assure tags are turned off while in storage and batteries/tags are operational prior to use.

18.4.2.6. Establish procedures to receive, store, and maintain tags received at origin.

18.4.2.7. Establish procedures for recovery and reutilization of active RFID.

18.5. I TV Verification. Designated personnel will query GTN no later than one (1) hour after aircraft departure to ensure the presence of cargo and/or passenger data. At a minimum, verify the mission number (to include the Julian date) and the three-digit MILAIR Aerial Port Code (APC). If data is not present at the prescribed time, is incorrect, or if assistance is needed after trouble shooting locally to ensure the communications and transactions were transmitted, the representative will contact the GTN Help Desk. The GTN Help Desk can be contacted at DSN: 576-6836, commercial (618) 256-6836, by fax at DSN 576-6600, commercial (618) 256-6600, via USTRANSCOM Help Desk toll-free at 1 (877) 906-0246 (request transfer to the GTN Help Desk), or by email ustc-gtnhelpdesk@ustranscom.mil.

18.6. Direct Vendor Delivery (DVD) Contract Language.

18.6.1. The DOD Transportation Acquisition Policy Memorandum of 2003 requires that vendors adhere to standard documentation and marking IAW MIL-STD-129, *DOD Standard Practice Military Marking for Shipment and Storage*, to include but not limited to Military Shipping Label and bar-coding requirements, and provide ITV at the time the shipment is initiated.

18.6.2. The DOD Transportation Acquisition Policy Memorandum of 1998 requires that tenders and contracts with transportation providers (carriers) include instructions to transmit and capture shipping information via Electronic Commerce (EC)/Electronic Data Interchange (EDI) to DOD (See Chapter 13 for further guidance).

18.7. ITV Metrics. On behalf of HQ AF/A4LM, 402 SCMS/GUSB will collect, analyze and report ITV data accuracy and timeliness on Air Force sponsored cargo.

18.7.1. Metrics criteria for analysis includes, but is not limited to: the transportation activity, system availability, data input – accuracy, completeness, usability; reporting timeliness, user training, ATCMD, bar coding – present, readable; data available in, GTN– system availability, drillable data, timely receipt of data transmissions, etc.

18.7.2. Though JOPES data remains at level IV, to accomplish their goal, the Air Force requires level VI detail. Level VI is detail expressed for passengers by name and SSAN or for coalition forces and civilians by country national identification number, and for cargo by Transportation Control Number (TCN). Non-Unit cargo includes FSN/NSN or item detail.

18.7.3. For airlift ITV – Source data comes from CMOS and GATES, and which feed GTN providing ITV on Channel/Contingency/SAAM missions. For remote locations or locations without CMOS or GATES capability the sponsoring command/higher headquarters must identify the shortfall to USTRANSCOM and request assistance. (See paragraph 18.8.2.6.).

18.7.4. DOD ITV POC is USTRANSCOM ITV Cell, DSN 779-2552, email: USTC-ITVTrackingCell-Lst@hq.transcom.mil

18.8. Contingency/Unit Move Deployment and Redeployment.

Figure 18.1. Deployment In Transit Visibility.

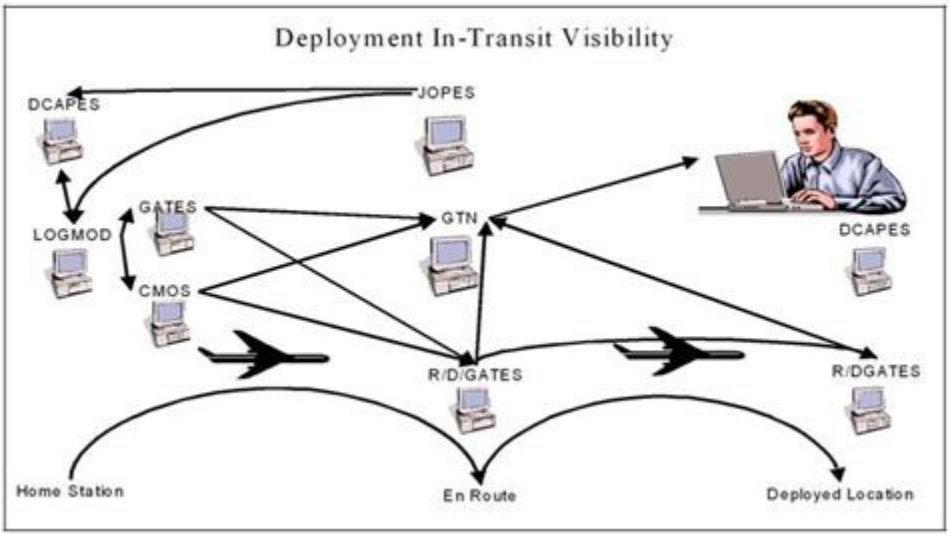

18.8.1. UDMs/IDOs at origin Air Force locations will assure complete accuracy of and provide all necessary documentation and data to enable ITV requirements of unit movement cargo upon deployment execution as follows:

18.8.1.1. At origin/POE. Prepare commercial movement documentation as required using CMOS. If cargo is moving through the DTS and is destined for a POE, assure Advanced Transportation Control and Movement Document (ATCMD) data is submitted to support receipt and onward movement. Prepare automated air manifests using CMOS. This is also applicable when using Operational Support Airlift (OSA) aircraft under control of the Joint Operational Support Airlift Center (JOSAC). Movements are not considered complete until ITV has been achieved.

18.8.1.1.1. Sealift requirements and ITV, refer to DTR Part II and Part III.

18.8.1.2. At destination/POD. Receipt for cargo. Prepare documentation for onward movement as required by mode. Prepare commercial movement documentation using CMOS. Prepare air or truck manifests using CMOS or GATES at AMC strategic aerial ports. Movements are not considered complete until ITV has been achieved.

18.8.1.3. At final destination. Receipt for cargo using CMOS. Movements are not considered complete until ITV has been achieved.

18.8.1.4. The basic principles of personnel and cargo deployment and documentation apply to both Air Force and non-Air Force movement requirements. Non-Air Force units moving using Air Force systems (CMOS/GATES/TCAIMS II, or new generation system) will provide unit deployment data for cargo and passengers from TC-ACCIS, TC-AIMS II, MDSS II, or an importable Excel spreadsheet, as required in the DTR, Part III, Mobility.

NOTE: Air Force passengers and cargo moving as part of, or imbedded within another service movement, will be manifested and processed by that Service. Service AIS, policy, and reporting will be followed for ITV capture and input into GTN.

18.8.1.5. Accurate manifesting at origin/POE will enable en route locations to electronically re-manifest. Manifests must accurately reflect cargo/passenger content prior to aircraft departure.

18.8.1.6. Deploying Air Force units will follow cargo and passenger processing guidance in AFI 10-403, *Deployment Planning and Execution*. Also see DTR, Part III, Mobility.

18.8.2. Deployment Requirements.

18.8.2.1. A fictitiously entered ULN will prevent cross-referencing this data back to the TPFDD. The supported combatant commander then begins losing visibility of forces moving forward. CMOS will pass movement data, with valid ULNs, to GTN . **NOTE: Do not use fictitious ULNs to deploy personnel in advance of an actual deployment order**. Air Force automated systems that comprise the IDS must be used to support the deployment process and enable ITV.

18.8.2.2. Use of IDS is mandatory for all wing-level deployments, regardless of size, scope, real world, exercise or unit moves. The IDS is designed to automate the deployment process and eliminate manual data entry through use of standard electronic interfaces between IDS components**. (See Chapter 19 for system descriptions)**

18.8.2.3. Deployment files from LOGMOD/LSA and MANPER-B will be passed to CMOS/GATES to achieve ITV. CMOS/GATES will pass the movement data to GTN.

18.8.2.4. Execution Cargo Procedures:

18.8.2.5. Units tailor their tasked UTC cargo data in LOGMOD/LSA. Once completed, wing-level LOGMOD/LSA operators export the consolidated electronic cargo data (via .CL5 export file) and pass it to aircraft load planners to produce pre-load plan.". LOGMOD/LSA operators export this data (via .CMC file) to CMOS/GATES operators at the CDF to preposition cargo data in CMOS/GATES prior to cargo in-check.

NOTE: In advance of cargo in-check, LOGMOD/LSA operators need to quickly populate AALPS/CMOS/GATES to facilitate efficient cargo flow. At in-check, the cargo is matched against the data prepositioned in CMOS/GATES and manifested. **NOTE: If changes are made in CMOS/GATES, UDMs/IDOs will notify LOGMOD/LSA personnel of these changes by the most expedient communication method PHONCON, email, exportable data file, etc. CMOS/GATES pushes electronic deployment data transactions to GTN to enable ITV.**

18.8.2.6. Either CMOS or GATES will be used to generate the electronic cargo manifest. "If CMOS/GATES is not available to produce the manifest, a DD Form 1385, *Cargo Manifest*, will be used. These locations will request assistance from USTRANSCOM through their supporting major command/higher headquarters. USTRANSCOM will then identify the ITV shortfall to AMC/TACC. AMC/618 TACC will then source and task the appropriate ITV resources, either with personnel and equipment moved to the location or by providing an E-mail ITV enabler utilizing the AMC ITV Cell." It is imperative that UDMs ensure all of the required TCMD data (e.g., transportation trailer data for hazardous material, sensitive, classified, etc) is accurate and loaded in LOGMOD/LSA. The UDM may require the assistance of a transportation specialist to ensure TCMD data meets DTR requirements.

18.8.2.7. En route locations with CMOS/GATES capability will ensure manifests reflect any cargo load changes prior to aircraft departure. This updated data will be sent electronically to onward destination(s) when originated from CMOS or GATES locations. When DD Form 1385 is used the manifest will be adjusted accordingly. En route locations without CMOS/GATES will be identified to USTRANSCOM by supporting major commands/higher headquarters.

18.8.2.8. APODs and terminating points with CMOS/GATES capability will receipt cargo and ensure it is manifested for onward transportation to final destination (this includes transloading). Terminating points without CMOS/GATES capability receipt cargo will be identified to USTRANSCOM by supporting major command/higher headquarters.

18.8.2.9. Execution Personnel/ Passenger Procedures:

18.8.2.10. The PDF exports personnel data (via .PRF file) and tasked manpower requirements data (via .LVY file) from MANPER-B and provides the data file to the IDO/wing LOGMOD Administrator for upload into LOGMOD/LSA. Squadrons use LOGMOD/LSA to electronically assign personnel to the tasked requirements. NOTE: Assigned personnel must be resident in LOGMOD/LSA ASAP prior to personnel processing to facilitate efficient passenger flow. The IDO/wing LOGMOD Administrator then exports the filled requirements data from LOGMOD/LSA (via .CHK file), by chalk, and provides the data file to the PDF for import it into MANPER-B for personnel processing and to produce TDY orders. The PDF exports electronic passenger data (via .PAX file) from MANPER-B, by chalk, and passes it to the transportation passenger specialists operating CMOS/GATES. CMOS/GATES will generate the electronic passenger manifest based on the order and files received from MANPER-B and pushes electronic deployment data transactions to GTN to enable ITV. NOTE: For commercially ticketed passengers, MANPER-B has a free form, alphanumeric field to update flight information and estimated time of arrival. This is used to pass to the gaining PERSCO teams, allowing them to meet flights and also have an idea of who and how many passengers are on a specific flight. Non-Air Force personnel will use their Service specific system to produce ITV data. If those units are incapable of providing ITV data they will contact USTRANSCOM for assistance

18.8.2.11. En route locations with CMOS/GATES capability will ensure manifests reflect any passenger load changes prior to aircraft departure. This updated data will be

sent electronically to onward destination(s) when originated from CMOS or GATES locations.

NOTE: Until the CMOS/GATES interface becomes fully functional, the enroute location (ISB) will need to rely on the passenger data file via email or hard copy to assist in remanifesting (transloading) at transload locations.

18.9. PEACETIME AIRLIFT OPERATIONS (NON-DEPLOYMENT)

18.9.1. Operational Support Airlift Operations (Non-Deployment). This section is applicable to missions not in direct support of exercises, contingencies and SAAMs. Applicable missions include Operational Support Airlift (OSA), Training, Refueling, and Aeromedical (to capture patient movement, development of TRANSCOM Regulating and Command and Control Evacuation System [TRAC2ES] interface with GTN is ongoing).

18.9.2. Passengers traveling on OSA, training, refueling, or aeromedical missions must report to the Air Passenger Terminal at the designated time to process for their flight (see note below). Passenger terminal management determines the designated time as it relates to Distinguished Visitor (DV) movement requirements when DV travel is planned. The Air Passenger Terminal or designated agency/representative is the manifesting point for passengers traveling on these missions. Passengers must have required travel documentation (Travel Orders, Military Identification Card, etc.), meet travel eligibility requirements in DOD 4515.13R, *Air Transportation Eligibility* and be manifested IAW DTR 4500.9-R, Part I, *Passenger Movement*. Distinguished Visitors (O-6s/Execs/Aides/civilian equivalents and higher) may have Protocol or designated representative coordinate reporting times and check-in with terminal management, allowing DVs to proceed directly to their departure location. CMOS, or GATES at locations with AMC terminals, will be used to process the passengers and transmit ITV data to GTN. ***NOTE:*** Alternatives for duty passengers on OSA missions reporting to Air Passenger Terminals include:

18.9.2.1. Designated non-AMC agency load passenger/cargo data into CMOS or provide load passenger/cargo data to the AMC terminal for input into GATES; or

18.9.2.2. Designated non-AMC agency will send (fax, e-mail, hand carry diskette, etc.) passenger/cargo information to designated location for entry into CMOS/GATES. Using this methodology, passenger/cargo data will be passed to the designated location for input into CMOS/GATES in time to meet data entry times identified in the DTR and this AFI.

18.9.3. At origin/POE. Cargo shipments will be processed through the Distribution Flight (DF) for onward movement via the DTS. CMOS, or GATES at AMC aerial ports, will be used to in-check shipment into the system. DF will prepare proper labeling and documentation prior to delivering the shipment to the freight terminal. Barcode labels will be used to expedite shipment processing through the DTS. DF will transmit ATCMD data to the ACA. Once the shipment arrives at the freight terminal, the ATCMD data will be compared to the shipping labels to ensure completeness and accuracy of data. The Cargo Processing function will in-check the cargo using CMOS, or at AMC aerial ports, GATES after all inspections have been completed. The air terminal activity will prepare air manifests and diskette(s) and ensure they are placed on the aircraft. CMOS, or at AMC aerial ports, GATES will be used to generate an electronic cargo manifest and diskette to accompany manifested cargo and transmit manifest data to GTN. If CMOS/GATES is not available to produce the

manifest that location will contact their supporting major command/higher headquarters for support.

18.9.4. At destination/POD. Receipt for cargo using CMOS, or at AMC aerial ports, GATES. Prepare documentation/manifests for onward movement as required by mode.

18.9.5. At final destination. Receipt for cargo. Terminating locations without CMOS/GATES capability will contact their supporting major command/higher headquarters for support.

18.9.6. For missions departing without any passengers and/or cargo onboard, the organization with mission flight-following responsibility (Command Post) will enter "0" in the Passenger and Payload entries in the applicable C2 system (GDSS or C2IPS) within 15 minutes after aircraft departure. Passenger and cargo information can be obtained from the aircraft commander or the Air Terminal Operations Center (ATOC) at locations with an AMC presence. **https://afkm.wpafb.af.mil/ASPs/CoP/OpenCoP.asp?Filter=OO-LG-AM-73.**

18.10. Global Decision Support System (GDSS) - ITV Feeder System.

18.10.1. To facilitate the sharing/marrying of information, GDSS uses the AMC mission as a means to attach related planning and execution data (e.g., airlift requirement, departure, arrival, advisories, delays, load data, diplomatic clearance, human remain, crew data, assigned tail number, controller remark, etc.). To accommodate both general user & interfacing system requirements, each mission has a minimum of two mission identifiers (e.g., Leg Mission Identifier, Primary Mission Key, etc.). The Leg Mission Identifier is a user entered 12 alphanumeric field that is assigned to a specific mission or mission segment within a mission. The Primary Mission Key is a computer generated 12 alphanumeric field that provides a unique key to reference a mission throughout the mission's life cycle.

18.10.2. GTN uses the mission identifiers to link C2 and Transportation system information; to provide the deployment community a mission identifier so that user can track the items they want moved.

18.11. Commercial Web-Based Tracking Capabilities.

18.11.1. Most domestic commercial transportation companies have established web-based tracking capabilities that can be used to complement DOD ITV. Domestic carriers that do business with the DOD are mandated to link their EDI feeds to GTN. GTN is the sanctioned DOD ITV system, but utilizing a commercial company's web-based tracking capability can significantly assist the customer in determining the location of an asset if the customer possesses the commercial tracking number. Worldwide Express Carrier and the DOD Domestic BPA web-based tracking sites are posted on the Cargo Movement CoP: https://wwwd.my.af.mil/afknprod/ASPs/CoP/openCoP.asp?Filter=OO-LG-TR-A1. Go to Carrier Web Links.

18.11.2. For the Air Force AFMC has developed TRACKER, an Internet web site that provides users with information from its data warehouse, which is filled by numerous data systems used by the DOD. The web site is actually a data mining and display tool for the Oracle database. TRACKER access and user's manual are found at **https://tracker.wpafb.af.mil**.

18.11.2.1. Information in the TRACKER database is aligned and presented to fulfill a single purpose: to provide the user with information on their requisitions, with emphasis placed on the flight line base level user. There are numerous data systems that provide management oversight on many things, but there are none that focus on getting information about requisitions to the lowest level personnel that really need it.

Chapter 19

TRANSPORTATION AND PACKAGING DATA SYSTEMS AND WEB TOOLS

19.1. Overview. Automated Information Systems (AIS) are essential in achieving operational efficiencies required to meet responsive mission support. This chapter provides links to systems used by the TOs to complete their mission. There is a vast amount of information available, recommend each transportation organization become familiar with these websites. This list is a working document, please email 401 SCMS/GUMAA with questions or updated information.

19.2. Automated Air Load Planning System (AALPS) (http://www.tis.army.mil/AALPS/). AALPS allows military air load planners to quickly and efficiently estimate airlift requirements, plan force packages, and modify aircraft loads. AALPS rapidly provides estimates of airlift requirements for a given list of equipment and passengers and takes into account the unique loading requirements for all delivery methods used on all U.S. military and Civil Reserve Air Fleet cargo aircraft. AALPS allows users to create and save contingency force packages in advance of a mission. This saves time and avoids input errors during deployment. The system has the capability to print approved load plans as well as various load and movement reports.

19.3. Automated Special Approval Process (ASAP) System (https://afkm.wpafb.af.mil/community/views/home.aspx?Filter=20593)ASAP is a web-based library of DOD Competent Authority Approvals (CAA) and DOD Certifications of Equivalency (COE). COEs and CAAs are required for transportation of certain hazardous materials. ASAP permits shippers to download pdf copies of these documents to attach to shipments. A password is not necessary to download COEs or CAAs from ASAP.

19.4. Cargo Movement Operations System (CMOS). CMOS is a combat support system that provides automated base level processing for cargo movement during peacetime and both deployment cargo and passenger movement during contingencies for the Air Expeditionary Forces. CMOS USE IS MANDATORY for all Air Force deployment and distribution freight functions. System and process updates, technical data and on-line training are available at the CMOS program office website: **https://www.gunter.af.mil/il/ilr/ilrc**/.

19.5. DOD Activity Address Code (DODAAC) Web Management System (https://dodaac.wpafb.af.mil/). Web based system designed to assist the customer as they search for existing DODAAC information, establish new DODAACs, update the address of existing DODAACs and delete those no longer needed. The system is interactive, provides assistance to the customer as they complete the request forms and provides feedback to the customer as to the status of their request.

19.6. Global Air Transportation Execution System (GATES) (https://gates.scott.af.mil/). GATES provides US Air Force Air Mobility Command, the Department of Defense (DOD), and commercial partners with automated functionality to process and track cargo and passenger information, support management of resources, support scheduling and forecasting, provide logistical support information, generate standard and ad hoc reports, and provide message routing and delivery service for virtually all airlift data. Intended users of GATES include, but are not limited to, Tanker Airlift Control Center (TACC), Airlift Clearance Authorities (ACAs), Service Airlift Validators, Passenger Reservation Centers, Military Transportation Offices (MTO), commercial reservation systems users, and various work centers such as the Air

Terminal Operations Center. Planned GATES operation sites are HQ Air Mobility Command and the aerial ports. Additional information about GATES may be found on the GATES informational CoP: https://afkm.wpafb.af.mil/ASPs/CoP/OpenCoP.asp?Filter=OO-LG-AM-73

19.7. Global Freight Management System - Electronic Transportation Acquisition (GFM-ETA) (https://eta.sddc.army.mil/). GFM is a DOD freight deployment and distribution information system designed to provide a centralized database of master reference files, freight tenders, domestic route order requests, bills of lading shipment information, and carrier performance data. The GFM interface provides timely carrier costing data to the installation TO for bill of lading shipments.

19.8. Global Transportation Network (GTN) **(https://www.gtn.transcom.mil/index.jsp)**. GTN is the USTRANSCOM command and control AIS that provides DOD and commercial transportation users and providers, a system of command, control and in transit visibility (ITV) capabilities. GTN collects and integrates transportation data from selected transportation systems. The resulting data is provided to the Joint Chiefs of Staff, the combatant commanders, the USTRANSCOM component commands, and to DOD customers to support transportation planning and decision making during peacetime and wartime. GTN supports planning, providing, and control of the common user airlift, surface lift, and terminal services that deploy and DOD global forces during peacetime and wartime. Specifically, GTN focuses on providing USTRANSCOM with the information necessary for visibility, planning, command and control, intelligence, and reporting.

19.9. Hazardous Materials Information Resource System (HMIRS) (http://www.dlis.dla.mil/hmirs/). This is a web site that contains the latest policy information relating to DOD hazardous materials packaging and transportation. Policy messages, questions/answers, information on upcoming meetings, meeting minutes, training information and training aids, links to other hazardous materials sites, links to hazardous materials regulations, links to automated systems that aid in hazardous materials preparation, and hazardous materials news items are posted on this web site.

19.10. Intelligent Road/Rail Information Server (IRRIS) **(https://www.irris.tea.army.mil/)** IRRIS is a Web-based portal to worldwide infrastructure and near-real-time data. This technology application was developed in partnership between GeoDecisions and the U.S. military to support the U.S. Department of Defense (DOD) with logistics, location and proximity analysis, data sharing, collaboration, transportation security, and situational awareness. IRRIS tracks items like road characteristics, bridge locations, video logs of primary routes, feature attribute data, and aerial photo and satellite imagery. The system also provides real time travel information about traffic congestion, weather, road closures, and construction detours. Users must request access to this system. Once users obtain DTTS accounts, a DTTS User Guide will be emailed to the address on record.

19.11. In transit Critical Asset Tracking System (ICATS). ICATS is a complex Access database application that LSO personnel use to manage movement of warfighter material supporting the Global War on Terror (GWOT). ICATS provides in transit visibility of critical shipments and will project delivery dates based on relevant factors affecting logistics pipeline. Development shall encompass user suggestions for improving the tracking of critical items. Contractor shall migrate ICATS from an Access DB to a web-enabled tracking tool based using the existing functionality. Major interfaces are with D087T – Tracker, commercial carrier

systems, and MAJCOM MICAP websites. Look for web-ICATS to become operational in the near future.

19.12. LOGMOD - Logistics Module. Automates the development and distribution of UTC packages. At the Installation/Wing level, it provides the capability to schedule, monitor, and control movement of cargo and personnel via air or surface modes of transportation. Used at all levels of command. At Headquarters Air Force, it is used to analyze and approve UTC equipment detail, build the MEFPAK report, and update standard UTCs in JOPES. Used at MAJCOM level to analyze and approve UTC equipment detail and to report tailored UTCs to JOPES. LOGMOD is used at squadron/unit level Unit Deployment Managers to track unit personnel readiness and for selection of cargo and personnel to fulfill UTC requirements. Provides standard reports for management of authorized data and real-time data to commanders for planned or contingency operations. LOGMOD can be accessed at: **https://www.my.af.mil/logmod/Logmod/main.do**

19.13. MANPER-B Manpower and Personnel Module-Base Level (MANPER-B). The base level automated capabilities in DCAPES supporting operation, contingency, deployment and exercise planning, readiness, and execution responsibilities. This is a Personnel accountable system. MANPER-B can be accessed at: **http://www.afpc.randolph.af.mil/readiness/MANPER-B.htm**.

19.14. Operation Enduring/Iraqi Freedom (OEF/OIF) Tool (https://www.afmc-mil.wpafb.af.mil/HQ-AFMC/LG/LSO/lol/Metrics/OEF.htm). These weekly products support the GWOT and include a shipping website, updated metrics, and email distributions. Weekly data is downloaded from TRACKER, Global Air Transportation Execution System, Global Transportation Network and commercial carrier websites. These metrics track over 10,000 shipments per week.

19.15. PackWeb (http://packweb.wpafb.af.mil/). This is a web site that contains Air Force Packaging Technology & Engineering Facility (AFPTEF) mission, roles and responsibilities. Container engineering drawings, special projects, packaging materials testing, marketing information, project submission and links to other relevant packaging resources.

19.16. Reusable Container Worldwide Warehouse System (RECON) (https://recon.wpafb.af.mil/). RECON is a web-enabled system used to cross-level excess reusable containers and/or packaging materiel from base to base, provide worldwide visibility and match warfighters' needs. This system is intended to cost effectively expedite the re-use and delivery of reusable containers and packaging materiel.

19.17. Special Packaging Instructions Retrieval and Exchange System (SPIRES) (https://spires.wpafb.af.mil/sindex.cfm) SPIRES is a complex web-enabled database application that AF and public contracting personnel use to manage SPIs. The SPIRES system allows for the creation and loading of new SPIs, updating currently active SPIs, and de-activating expired SPIs. The system also provides a data inconsistency management system. The D035T system interface is critical in ensuring the correct SPI's are available and up to date on a daily basis.

19.18. TRACKER Data System (https://tracker.wpafb.af.mil/). TRACKER is an Internet web site that provides users with information from its data warehouse, which is filled by numerous data systems used by the Department of Defense. TRACKER works by getting copies of the transactions that are transmitted between the computer systems used to acquire, store, repair, and move assets for the US Air Force.

19.19. Tracker-Lite System (https://trackerlite.wpafb.af.mil/Logon.aspx?ReturnUrl=/TL.aspx). User ID and password are required for access. Allows users to supply shipment information for automated validation.

19.20. Logistics Web Forms Processor (LWFP). Web Based Forms for (**https://lsotools.wpafb.af.mil**/). Includes electronic versions of the following:

19.20.1. DD Form 1384, Advance Transportation Control Movement Document (ATCMD), and DD Form 1387, 2D Military Shipment Label (MSL). Web-based system to generate TCMDs and MSLs for shippers. System includes data validation for all shipment types and sends advanced warning to the POE. Full relationships maintained between APOEs and APODs.

19.20.2. DD Form 1149, *Requisition and Invoice/Shipping Document*. Real time web based system to generate DD Forms 1149. The system maintains a user account to access submission history. Also includes Long-Line of Accounting (LLoA) Fund Cite validation and data validation. DD 1149 form includes 2D Barcode and direct interface to Tracker. CMOS interface is in development.

19.20.3. Transportation Account Code (TAC) Request Form. Used to assign individual unit-funded TAC codes to shippers. Users must attach a valid, certified MORD to the request form for TAC funding. **https://lsotools.wpafb.af.mil**/.

19.20.4. Virtual Vendor's Help Desk. Website for assisting U.S. based vendors/contractor and military buyers/requisitioners in moving purchased material to its overseas destinations in accordance with DOD and Air Force policy. The website shall provide user friendly access to instructions, policy, and automated tools. The site streamlines the cargo movement process by coordinating the actions of buyers, vendors, and unit TOs.

Chapter 20

COUNTER-CHEMICAL, BIOLOGICAL, RADIOLOGICAL, AND NUCLEAR HIGH YIELD EXPLOSIVES (CBRNE) REQUIREMENTS, TACTICS, TECHNIQUES, AND PROCEDURES FOR IDENTIFYING, MARKING, AND MANAGING CONTAMINATED CARGO SHIPMENTS

20.1. General Information. This chapter contains the procedures for identification, marking, and maintenance of cargo shipments contaminated during hostilities or contingencies. Cargo shipments may be contaminated by any number of means, whether chemical, biological, radiological, or nuclear. Contamination by chemical means is considered the primary threat to cargo shipments. During a conflict or contingency, minimize the potential for cargo contamination, while continuing to support the mission. If cargo shipments become contaminated, the shipments must be decontaminated as soon as possible, identified, and properly marked in accordance with Air Force guidance. The primary resources for the data contained in this chapter are AFMAN 10-2602, *Nuclear, Biological, Chemical, and Conventional (NBCC) Defense Operations and Standards*, and the Counter-Chemical Warfare Concept of Operations (C-CW CONOPS) approved MAJCOM training materials.

20.1.1. The development of the tactics, techniques, and procedures (TTP) within the cargo movement operations realm used analysis of field operations, functional area publications, lessons learned, as well as feedback from functional area managers and subject matter experts.

20.1.2. These TTPs also incorporate best practices and solutions to mitigate the consequences of Nuclear, Biological, Chemical, and Conventional (NBCC) attacks and sustain operations in NBCC environments. The decision to use them depends upon the threat and conditions present at the airbase. Include NBCC defense TTP in unit or work center checklists and job guides. Functional Area Managers (FAM) should review field unit solutions and include common TTP into functional area publications and enlisted Career Field Education and Training Plans (CFETP). The Civil Engineer Readiness Flight can provide assistance on NBCC defense actions and help functional area experts develop TTP to support specific operations.

20.1.3. The TTPs in the following paragraphs do not supercede or replace requirements within equipment T.O.s. Follow established procedures for safe operations. Identify conflicts or hazards through the Air Force T.O. System or Safety System.

20.2. Cargo Movement Responsibilities:

20.2.1. Airbase contamination can significantly disrupt air and ground cargo movements if the Unit Control Center (UCC) and cargo handlers do not plan and execute pre- and post-attack actions. The UCC must coordinate and identify task priorities and obtain airbase support when needed. Cargo handlers must effectively employ pre- and post-attack measures to minimize mission degradation and enable sustained operations. This includes the coordinated use of a system that balances the mission criticality level (importance) of the cargo with the hazard category (residual danger) associated with the materials to determine the appropriate action. Cargo handlers will require assistance from their unit post-attack reconnaissance team and Civil Engineer Readiness to determine the degree of contamination

that may be present on the cargo or in the cargo storage and movement areas. **Note:** The term "Cargo Handlers" applies to personnel in Air Force Specialty Codes 2T0XX and 2T2XX. Personnel in other AFSCs exercise CBRNE procedures outlined in their career field directives.

20.2.2. The UCC controlling cargo movement will use Table 20.1. to identify the mission criticality of the material. Conspicuously mark this code on the cargo.

Table 20.1. Cargo Movement Mission Criticality Level.

Mission Criticality Level	Definition
C - Critical	Cargo is sufficiently important that it must be transported within 4 hours if possible, regardless of the existence of contamination.
P - Priority	Cargo is sufficiently important that it must be transported within 12 hours if possible, regardless of the existence of contamination.
A – Accelerated	Cargo is sufficiently important that it must be transported within 24 hours if possible, regardless of the existence of contamination.
R – Routine	Mission can be delayed until contamination levels are such that MOPP 4 is not required, regardless of how long the contamination takes to dissipate.
N – Negligible	Mission can be delayed until there is no measurable indication of contamination. This type cargo should not normally be accepted inside the cargo movement area. Room must be saved for higher priority cargo.

20.2.3. Use Table 20.2. to determine the hazard category associated with the cargo.

Table 20.2. Cargo Movement Hazard Category.

Hazard Category	Definition
1	Actual or suspected surface deposition of biological pathogens.
2	HD, L, or GB vapor present without contact hazard.
3	VX, L contact hazard present without measurable vapor hazard.
4	HD, GB contact hazard combined with medium level of danger associated with vapor concentrations (four or five CAM bars with HD and up to six CAM bars with GB)
5	HD, L, GB, VX contact hazard combined with high level of danger associated with vapor concentrations (six or more CAM bars with HD, positive M256A1 tab for L, seven or

	more CAM bars with GB, or six or more CAM bars with VX). Note: In the case of GB, high-vapor hazard alone can drive this category designation.

20.2.4. To support cargo movement activities in a contaminated environment, cargo handlers must possess 20 books of M8 paper and 1 NBC marking kit (with two chemical sign refills).

20.2.5. Contamination avoidance is the key to success with cargo movement operations. Because of time constraints required by Time Phased Force Deployment Data (TPFDD) operations or other mission requirements and our technological inability to decontaminate several substances, contamination avoidance is the single most effective protective measure. As with all other operations, the proper implementation of contamination avoidance and contamination control measures will directly influence the amount and extent of decontamination operations required in a post-attack environment. These measures also directly influence when an individual or work center has to assume Mission-oriented Protective Posture (MOPP) 4 in an otherwise clean area because contaminated cargo entered the site. Accomplish the following pre-attack contamination avoidance measures.

20.2.5.1. To the maximum extent possible, place cargo underneath overhead cover. This can be provided through storage space inside facilities or the use of barrier materials. If using barrier materials, triple wrap each pallet. Place one layer under the pallet net and two layers over the pallet net. Remove the top layer and replace if it becomes contaminated. Place M8 paper on the outermost horizontal layer of the barrier material. When a contaminated layer of material is removed, place M8 paper on the next horizontal layer.

20.2.5.2. Develop a Chemical Agent Monitor (CAM) or an Improved CAM (next generation CAM) footprint of the cargo storage and movement areas. By annotating what CAM readings exist in a known clean environment (false positive), personnel will not misidentify the hazard associated with a pallet of cargo and they will not waste time and energy attempting to decontaminate something that is clean. Refer to T.O. 11H2-20-1, Operator's Manual for the Chemical Agent Monitor (CAM), for CAM operating and maintenance procedures.

20.2.5.3. Place M8 paper in multiple locations throughout the area. As a minimum, position it on every pallet and on flat surfaces in open areas. Do not place it under facility eaves or pavilion roofs.

20.2.6. In addition to the required post-attack reconnaissance and self-aid, buddy care activities, accomplish the following actions. **Note:** The timing of post-attack reconnaissance and self-aid, buddy care activities depend on the situation and direction from the airbase and unit chain of command. Unless otherwise directed, do not accomplish the following activities until after the liquid deposition phase has ended (about 60 minutes).

20.2.6.1. Determine the contamination status of each individual cargo pallet. Annotate and report the result.

20.2.6.2. If a single sheet of plastic protected contaminated assets, remove and replace the covering within six hours (the faster the better). If a double or triple sheet of plastic or canvas protected contaminated assets, carefully remove the outer layer and replace it

as time permits. Carefully roll the material so the contaminated side is rolled to the inside and dispose of the material as contaminated waste.

20.2.6.3. If barrier materials of any type did not protect the contaminated cargo, mark the item as contaminated in accordance with Air Force and unit marking procedures, (NBC marking kit, signs on all sides). If contaminated with more than one type of agent (chemical and biological for instance), attach both types of signs to the cargo.

20.2.6.3.1 Further, for prioritizing cargo movement, cargo handlers should annotate the front of the appropriate NBC Marking Kit sign with the mission criticality (see Table 20.1.) and hazard category (see Table 20.2.) designator. The code for the mission criticality designator will be the first letter of the appropriate word i.e., "C" represents critical, and "N" represents negligible. The code for the hazard category is the number designator itself (i.e., "3" represents a VX, L contact hazard without a measurable vapor hazard).

20.2.6.3.2. Annotate the specific agent or agents, date, time of marking, and the temperature (either Fahrenheit or Celsius) at the time of the marking operation on the rear of the marking sign or signs. If using Sampling Kits (biological agent samplers), annotate the rear of the sign whether the hand-held assay tests are positive or negative. Report the contamination status of each pallet to the UCC.

20.2.7. Cargo handlers should use Table 20.3. through Table 20.7. to determine what decontamination actions, if any, are necessary based on the contaminated cargo's mission criticality level and its hazard category.

Table 20.3. Cargo Decontamination Actions (Critical).

Mission Criticality Level	Hazard Category	Recommended Action
Critical	1	Spray cargo with water if action will not damage contents. Triple wrap, mark as "C1."
Critical	2	Aerate for 30 minutes if surrounding environment is clean. Triple wrap, mark as "C2."
Critical	3	Decontaminate with M295 decontamination kit. Triple wrap, mark as "C3."
Critical	4	Decontaminate with M295 decontamination kit. Aerate for 30 minutes if GB is the agent and the surrounding area is clean. Triple wrap, mark as "C4."
Critical	5	Decontaminate with M295 decontamination kit. Aerate for 30 minutes if GB is the agent. Triple wrap, mark as "C5."

Table 20.4. Cargo Decontamination Actions (Priority).

Mission Criticality Level	Hazard Category	Recommended Action
Priority	1	Same as "Critical 1," except wipe down cargo with dust remover, retest cargo with hand-held assay, triple wrap, and mark as "P1."
Priority	2	Aerate for 6 hours if surrounding environment is clean, triple wrap, and mark as "C2."
Priority	3	Decontaminate with M295 decontamination kit, recheck with M8 paper, and use M295 again if necessary, triple wrap, mark as "P3."
Priority	4	Aerate for 6 hours if surrounding environment is clean, decontaminate with M295 decontamination kit, triple wrap, mark as "P4."
Priority	5	Aerate for 6 hours if surrounding environment is clean, decontaminate with M295 decontamination kit, triple wrap, mark as "P4."

Table 20.5. Cargo Decontamination Actions (Accelerated).

Mission Criticality Level	Hazard Category	Recommended Action
Accelerated	1	Same as "Priority 1," except expose cargo to sunlight for 4 hours and then attempt wash down, conduct wipe down procedures again if second hand-held assay test was positive. Triple wrap, mark as "A1."
Accelerated	2	Aerate for 12 hours if surrounding environment is clean. Triple wrap, mark as "A2."
Accelerated	3	Same as "Priority 3," except aerate for 12 hours before the decontamination process, recheck with M8 paper, and repeat the use of M295 as often as necessary or until time no longer permits. Triple wrap, mark as "A3."
Accelerated	4	Same as "Priority 4," except aeration time should be extended to 12 hours. Further, recheck with M8 paper following initial M295 decontamination action; re-accomplish M295 operation if contact hazard still exists. Triple wrap, mark as "A4."
Accelerated	5	Same as "Priority 5," except aeration time should be extended to 12 hours. Further, recheck with M8 paper following initial M295 decontamination action; re-accomplish M295 operation if contact hazard still exists. Triple wrap, mark as "A5."

Table 20.6. Cargo Decontamination Actions (Routine).

Mission Criticality Level	Hazard Category	Recommended Action
Routine	1	Same as "Accelerated 1," except continue weathering and wash down and/or wipe down process until hand held assay tests are negative. Triple wrap, mark as "R1.
Routine	2	Same as "Accelerated 2." Triple wrap, mark as "R2."
Routine	3	Same as "Accelerated 3," except aerate for 24 hours before starting the decontamination process. Triple wrap, mark as R3."
Routine	4	Same as "Accelerated 4," except cargo should not be loaded until the contact hazard has completely dissipated. Triple wrap, mark as "R4."
Routine	5	Same as "Accelerated 5," except cargo should not be loaded until the contact hazard has completely dissipated. Triple wrap, mark as "R5."

Table 20.7. Cargo Decontamination Actions (Negligible).

Mission Criticality Level	Hazard Category	Recommended Action
Negligible	1	Same as "Routine 1." Triple wrap, mark as "N1."
Negligible	2	Do not process until contamination dissipates or mission criticality level is upgraded. Triple wrap, mark as "N2."
Negligible	3	Do not process until contamination dissipates or mission criticality level is upgraded. Triple wrap, mark as "N3."
Negligible	4	Do not process until contamination dissipates or mission criticality level is upgraded. Triple wrap, mark as "N4."
Negligible	5	Do not process until contamination dissipates or mission criticality level is upgraded. Triple wrap, mark as "N5."

20.2.8. Movement of contaminated cargo. Use the following guidelines when loading and transporting contaminated cargo.

20.2.8.1. Determine the contamination status of the material handling equipment (K-loaders or forklifts) and the transport vehicle or vehicles. Determine if the items have measurable amounts of contamination. Attempt to locate the pockets of contamination if possible. This may entail the use of a CAM to pinpoint pockets of dirt and grease that may house agents in liquid or dusty form that M8 paper does not readily identify.

20.2.8.2. If the transport vehicle is uncontaminated, take the following precautions to keep it clean during the cargo movement process.

20.2.8.2.1. Expediently decontaminate the portions of the material handling equipment exposed to either the cargo pallet or the transport vehicle (forklift tines and rollers on the K-Loader). Use M295 decontamination kit or 5 percent chlorine bleach solution to decontaminate.

20.2.8.2.2. Personnel should ensure to place plastic or another barrier material in the bed of the transport vehicle over the area that the cargo pallet(s) will sit on.

20.2.8.2.3. Replace the outer layer of barrier material on the cargo pallet(s) if necessary.

20.2.8.2.4. The transport vehicle operator should be the only person in the transport vehicle and must wear the appropriate level of IPE.

20.2.8.2.5. Local cargo handlers should perform the actual cargo loading. Cargo handlers should not touch or stand on or inside the vehicle unless absolutely necessary. If they must touch or stand on or inside the vehicle, they should use decontamination troughs containing 5 percent chlorine solutions to decontaminate their gloves and boots before they make contact.

20.2.8.2.6. Check the clean transport vehicle for evidence of cross-contamination and decontaminate with the M295 decontamination kit if contaminated.

20.2.8.2.7. Seal vehicle chocks or other transport vehicle accessories that may have come in contact with contaminated surfaces inside a plastic bag prior to loading.

20.2.8.3. Appropriately mark the vehicle and the cargo to clearly identify the hazard associated with the contaminated cargo.

20.2.9. Use the following guidelines when loading and transporting clean cargo after attacks with chemical or biological agents.

20.2.9.1. Determine the contamination status of the material handling equipment (forklifts and K-loaders) and the transport vehicle or vehicles.

20.2.9.2. If the material handling equipment and/or transport vehicle is contaminated, take the following precautions to prevent them from cross-contaminating the 463L cargo pallet during the cargo movement process.

20.2.9.2.1. Expediently decontaminate the portions of the material handling equipment that will come in contact with the cargo pallet.

20.2.9.2.2. Place at least two sheets of plastic or another layer of barrier material in the bed of the transport vehicle over the area that the cargo pallet or pallets will sit on.

20.2.9.2.3. Ensure that the pallet has at least a double wrap of barrier material.

20.2.9.2.4. The transport vehicle operator should be the only person in the transport vehicle and must wear the appropriate level of IPE.

20.2.9.2.5. Local cargo handlers should perform the actual cargo loading. Cargo handlers should not touch or stand on or inside the vehicle or vehicles unless absolutely necessary. If they must touch or stand on or inside the vehicle or vehicles, they should use decontamination troughs containing 5 percent chlorine solutions to decontaminate their gloves and boots after they make contact.

20.2.9.2.6. Check the pallet or pallets for evidence of cross-contamination and decontaminate with the M295 decontamination kit if contamination is present.

20.2.9.3. Appropriately mark the vehicle to clearly identify the associated hazard.

20.2.10. Cargo movement personnel should accomplish the following actions when they discover they will be receiving contaminated cargo from another location.

20.2.10.1. Acquire all available information concerning the cargo. To include the following information:

20.2.10.1.1. A description of what the specific cargo is (spare parts for special purpose vehicles for example) and to whom on the airbase it belongs.

20.2.10.1.2. A description of what type of suspected contamination is present on the cargo.

20.2.10.1.3. The physical condition of the cargo (i.e., triple wrapped with barrier material, unconstrained rolling stock).

20.2.10.1.4. The time of cargo contamination in relation to the anticipated reception time at the installation.

20.2.10.1.5. The status of the vehicle operator or operators (i.e., are there any casualties and will anyone require the use of a Contamination Control Area (CCA)).

20.2.10.2. Contact Civil Engineer Readiness and the unit expecting delivery. Request assistance with an assessment of the contamination hazard and mission criticality associated with the cargo. Use this assessment to determine the degree of required IPE or reception activities. Also, use this assessment to change the specific cargo delivery location on the installation if necessary.

20.2.10.3. If the cargo does not have a high mission priority (as stated by the receiving unit), assess the ability of the unit and/or cargo handlers to isolate the cargo upon reception. If choosing the isolation option, clearly cordon off the area surrounding the pallet or pallets with the NBC Marking Kit. Use a cordon radius of 25 feet or as directed by Civil Engineer Readiness personnel.

20.2.10.4. If personnel must expediently use contaminated cargo to facilitate mission operations, the receiving unit and/or cargo handlers should take the following actions:

20.2.10.4.1. Ensure reception personnel are in the appropriate MOPP (normally MOPP 4).

20.2.10.4.2. Remove the layers of barrier material (if present), cargo nets, and/or pallet banding and dispose of these items as contaminated waste.

20.2.10.4.3. Verify the type and level of contamination (for example, VX in liquid form on metal boxes with no measurable vapor hazard).

20.2.10.4.4. If feasible, remove the specific cargo from its packaging configuration (wooden boxes for instance) and dispose of the packing material as contaminated waste.

20.2.10.4.5. Accomplish appropriate decontamination activities based on the extent of contamination, agent or agents present, cargo surface, and time available. Contact Civil Engineer Readiness to determine the most effective method.

20.2.10.4.6. If the cargo items themselves are contaminated, mark them appropriately so that work center personnel will immediately recognize the potential residual hazard.

20.2.10.4.7. Each individual should accomplish immediate decontamination and process through the airbase CCA when directed by the UCC.

Chapter 21

OTHER CARGO MOVEMENT INFORMATION AND ADMINISTRATIVE REQUIREMENTS

21.1. Forecasting Cargo Requirements. The Air Force is required to submit forecasting requirements for airlift and sealift to AMC and SDDC for the purpose of scheduling movements and setting billing rates. SSCO consolidates inputs from MAJCOMs and submits forecast requirements in the format prescribed by the DTR, Part II. The forecast incorporates historical movement data combined with known or projected movement requirements. Program managers will identify ammunition, aircraft engine, missile, Tactical Air Missile Program (TAMP), helicopters, support equipment, special weapons, communications equipment, and vehicle requirements to the SSCO when known, for budget and forecasting purposes. The SSCO will submit required forecasts to meet established suspense dates.

21.1.1. Submission of long-and short-range cargo airlift requirements will follow the timelines and formats in DTR, Part II.

21.1.2. Submission of sealift cargo requirements will follow the timelines and formats in DTR, Part II.

21.2. SAAM Requests. See DTR, Part II, for SAAM request format and instructions.

21.3. Shipment of Human Remains. Refer to AFI 34-242, *Mortuary Affairs Program*, Chapter 5; AFI 24-101, paragraph 3.22.; and AMCI 24-101, volume 11, section C, paragraph 30. For additional guidance, refer to DTR, Part VII.

21.4. DELETED

21.5. Public Highway Movements. The TO is the installation focal point for ensuring that Air Force cargo moving over public highways conforms to Federal, State, and local laws, regulations, and ordinances relating to vehicle size and weight limitations. Except as shown in the DTR, Part II, and Part III, vehicular movements over public highways must have required permits issued by State authorities.

21.5.1. Directory of Permit Officials. TOs maintain a copy of SDDCTEA's The Directory of Highway Permit Officials and Mobilization Movement Control Coordinators (MOBCON). It contains contact information for state permit officials and a summary of state size and weight limits. SDDC Transportation Engineering Agency (SDDC-SA), 720 Thimble Shoals Blvd., Suite 130, Newport News VA 23606-4537, publishes and issues this directory. The Directory may be accessed at SDDCTEA web-site: **http://www.tea.army.mil**/ (user identification and password must be requested).

21.5.2. Military Cargo Essential to National Defense**.** Occasionally, certain highway movements require certification, as "Essential to National Defense" due to mission needs. This normally applies to essential cargo that must move over the public highway because the cargo cannot be reduced in size or weight to move by another mode. Certification for this type of movement is supported differently depending on whether movement is via commercial carriers or military resources.

21.5.2.1. For certification for movement via commercial carrier refer to DTR, Part II, and submit certification with the rate tender. Justification of essentiality should be generated by the shipping activity and submitted to the TO. Request assistance from the SDDC Deployment Support Command or theater Combatant Commander.

21.5.2.2. For certification of movement via organic military resources refer to DTR, Part III. Justification of essentiality will be generated by the shipping activity and submitted to the TO. Refer to SDDCTEA's Directory of Highway Permit and MOBCON Officials for further guidance. See DTR, Part III, Appendix F.

21.6. Other Administrative Requirements.

21.6.1. Information Collections. No information collections are created by this Publication.

21.6.2. Forms Adopted. DD Form 250, *Material Inspection and Receiving Report*; DD 361, *Transportation Discrepancy Report*; DD Form 448, *Military Interdepartment Purchase Request*; DD Form 577, *Signature Card*; DD Form 1086, *Export Traffic Release Request*; DD Form 1149, *Requisition and Invoice/Shipping Document*; DD Form 1348-1A, *Issue Release/Receipt Document*; DD Form 1387, *Military Shipping Label*; DD Form 1659, *Application for US Government Shipping Document/Instructions*; DD Form 1907, *Signature and Tally Record*; DD Form 2169, *Special Packaging Instruction (SPI)*; DD Form 2332, *Product Quality Deficiency Report Exhibit*; AF Form 3, *Hazard Abatement Plan*; AF Form 9, *Request for Purchase*; AF Form 55, *Employee Safety and Health Record*; AF Form 406, *Miscellaneous Obligation Reimbursement Document (MORD)*; AF Form 457, *USAF Hazard Report*; AF Form 616, *Fund Cite Authorization (FCA)*; AF Form 1118, *Notice of Hazard*; AMC Form 101, *Green Sheet Request*; SF 364, *Report of Discrepancy (ROD)*; SF 1103, *Government Bill of Lading*; and SF 1109, *Government Bill of Lading Continuation Sheet*.

21.6.2. **(LITTLEROCKAFB) Forms Adopted**.

AF Form 406, *Miscellaneous Obligation Reimbursement Document (MORD)*

AF Form 616, *Fund Cite Authorization*

AF Form 847, *Recommendation for Change of Publication*

DD Form 448, *Military Interdepartmental Purchase Requests (MIPR)*

21.6.3. Forms Prescribed. AF Form 451, *Request for Packaging Service*; AF Form 1335, *Government Bill of Lading Register – Outbound*; AF Form 4387, *Outbound Transportation Protective Service Materiel Worksheet*, AF Form 4388, *Inbound Transportation Protective Service Materiel Checklist.*

21.6.3. **(LITTLEROCKAFB) Forms Prescribed.** DD Form 1149, *Requisition and Invoice/Shipping Document*

LOREN M. RENO, Lt Gen, USAF
DCS/Logistics, Installations & Mission Support

(LITTLEROCKAFB)

BRIAN S. ROBINSON, Colonel, USAF
Commander

Attachment 1

GLOSSARY OF REFERENCES AND SUPPORTING INFORMATION

References

DOD 4140.1-R, *DOD Supply Chain Materiel Management Regulation*

DOD 4140.65-M, *Compliance for Defense Packaging: Phytosanitary Requirements for Wood Packaging Material (WPM)*

DOD 4160.21-M, *Defense Materiel Disposition Manual*

DODDTR 4500.9-R, *Defense Transportation Regulation (DTR), Part I, Passenger Movement; Part II, Cargo Movement; Part III, Mobility; Part IV, Personal Property; Part V, Customs; Part VI, Management & Control of Intermodal Containers and System 463-L Equipment; and Part VII, Human Remains Movement*

DOD 4500.54-G, *DOD Foreign Clearance Guide*

DOD 4145.19-1, *Storage and Materials Handling*

DOD 4525.8-M, AF Supplement 1, *DOD Official Mail Manual*

DOD 4540.7, *Operation of the DOD Engineering for Transportability and Deployability Program*

DODI 5000.64, *Accountability and Management of DOD-Owned Equipment and Other Accountable Property*

DOD 5100.76-M, *Physical Security of Sensitive Conventional Arms, Ammunition, and Explosives*

DOD 5105.38-M, *Security Assistance Management Manual*

DOD 5200.1-R, *Information Security Program*

DOD C-5210.41-M, AF Supplement, *Nuclear Weapon Security Manual (Confidential)*

DOD 5220.22-R, *Industrial Security Regulation*

DOD 6050.5-L, *Hazardous Materials Information System (HMIS) Item Listing*

DOD 7000.14-R, *DOD Financial Management Regulation (DODFMR)*

Joint Publication 4-09, *Distribution Operations*

AFI 10-403, *Deployment Planning and Execution*

AFI 11-218, *Aircraft Operations and Movement on the Ground*

AFI 13-213, *Airfield Management and Base Operations*

AFI 24-114, *Small Air Terminal Operations*

AFI 24-238, *In Transit Visibility*

AFI 31-101, *The Air Force Installation Security Program*

AFI 31-401, *Information Security Program Management*

AFI 31-601, *Industrial Security Program Management*

AFI 32-7086, *Hazardous Materials Management*

AFI 33-201V5, *Controlled Cryptographic Items (CCI)*

AFI 34-242, *Mortuary Affairs Program*

AFI 40-201, *Managing Radioactive Materials in the US Air Force*.

AFI 64-117, *Air Force Government-Wide Purchase Card (GPC) Program*

AFI 65-601, *Volume I, Budget Guidance and Procedures*

AFI 90-901, Operational Risk Management

AFI 91-202, *USAF Mishap Prevention Program*

AFI 91-301, *USAF Occupational and Environmental Safety, Fire Prevention, and Health (AFOSH)Program*

AFJI 23-504, *Radioactive Commodities in the DOD Supply System*.

AFJI 24-210, *Packaging of Hazardous Material*.

AFJI 24-223, *Department of Defense Engineering for Transportability*

AFJMAN 23-215, *Reporting of Supply Discrepancies*

AFMAN 24-206_IP ,*Packaging of Materiel*

AFJMAN 24-306, *Manual for the Wheeled Vehicle Driver*

AFMAN 23-110, *USAF Supply Manual*

AFMAN 24-204_IP, *Preparing Hazardous Materials for Military Air Shipment*

AFMAN 33-363, *Management of Records*

AFOSH 91-46, *Material Handling and Storage Equipment*

AFOSH-STD 91-66, *General Industrial Operations*

AFOSH-STD-91-100, *Aircraft Flight Line Ground Operations and Activities*

AFOSH-STD-91-501, *Air Force Consolidated Occupational Safety Standard*

AFPAM(I) 24-237, *Packaging of Materiel, Preservation*

AFPAM 32-7043, *Hazardous Waste Management Guide*.

AFPAM 90-902, *Operational Risk Management (ORM) Guidelines and Tools*

AMCI 24-101, Volume 9, *Air Terminal Operations Center*

AMCI 24-101, Vol 11, *Cargo and Mail Policy*

MIL-HDBK-701, *Blocking, Bracing and Skidding of Industrial Plant Equipment for Shipment and Storage*

MIL-HDBK-774, *Palletized Unit Loads*

MIL-STD-107, *Preparation and Handling of Industrial Plant Equipment*

MIL-STD 129, *Standard Practice for Military Marking*. Establishes standards for uniform marking of shipments for DOD.

MIL-STD 2073-1D, *Standard Practice for Military Packaging*. Establishes standards for uniform packaging of shipment for DOD.

NGR 130-6/ANGI 36-2, *United States Property and Fiscal Officer ment, Duties, and Responsibilities*

RSPA P 5800.7, *North American Emergency Response Guidebook*

T.O. 00-25-234, *General Shop Practice Requirements for Repair, Maintenance, and Test of Electronic Equipment*

T.O. 00-85-B-3, *How to Package Air Force Spares*

T.O. 11A-1-46, *Firefighting Guidance, Transportation, and Storage Management Data and Ammunition Complete Round Chart*

T.O. 11A-1-60, *General Instructions Inspection of Reusable Munitions Containers and Scrap Material Generated from Items Exposed to, or Containing Explosives*

T.O. 34-1-3, *Machinery and Shop Equipment*

Title 22, CFR, *Foreign Relations*

Title 40, CFR, *Protection of Environment*

Title 40, CFR, Parts 240-267 and Part 761, *Environmental Protection Agency Regulations, Protection of Environment*

Title 41, CFR, *Public Contracts and Property Management*

Title 49, CFR, *Transportation*

Title 49, CFR, Parts 100-199, and DOT exemptions

Title 49, CFR, Parts 390-399, *Federal Motor Carrier Safety Regulations*

Air Force Records Information Management System (AFRIMS), located at **https://www.my.af.mil/afrims/afrims/afrims/rims.cfm**.

International Air Transport Association (IATA) Dangerous Goods Regulations

International Civil Aviation Organization (ICAO) Technical Instructions for the Safe Transportation of Dangerous Goods by Air

International Maritime Organization (IMO), International Maritime Dangerous Goods (IMDG) Code

Joint Hazard Classification System (JHCS)

Transportation Facilities Guide (TFG). See DTR, Part II for update procedures and access to SDDC's web site.

U.S. Government Airlift Rates and Non-U.S. Government Airlift Rates. See website:

http://public.scott.af.mil/hqamc/fm/rates/htm.

DOD 4160.21-M, *Defense Materiel Disposition Manual*. Provides guidance for handling, processing and disposing of government property.

DOD 6050.5-L, *Hazardous Materials Information System (HMIS) Item Listing*. Lists DOD hazardous materials, by the last nine digits of the National Stock Number, for all services and contains information on how to handle, store, use, transport, and dispose of HM.

AFJI 23-504, *Radioactive Commodities in the DOD Supply System*. Provides DOD policy guidelines on controls and specific handling responsibilities for radioactive items.

AFMAN 24-204_IP, *Preparing Hazardous Materials for Military Air Shipments*. Provides specific guidelines and instructions for preparation, packaging and documentation of hazardous materials for military air shipments.

AFPAM 32-7043, *Hazardous Waste Management Guide*. Provides specific transportation requirements for hazardous waste.

RSPA P 5800.7, *North American Emergency Response Guidebook.* A guidebook developed by DOT for first responders during the initial phase of a hazardous materials/dangerous goods incident.

Title 40, CFR, Parts 240-267 and Part 761, *Environmental Protection Agency Regulations, Protection of Environment.* Provides specific guidelines for management of hazardous wastes and substances.

Title 49, CFR, *Transportation,* ***Parts 100-199****, and DOT exemptions.* Contains criteria and requirements for classifying, describing, packaging, marking, labeling, shipping, placarding and transporting HM for commercial carriers by all modes/methods of transportation within the United States.

Title 49, CFR, Parts 390-399, *Federal Motor Carrier Safety Regulations***.** Contains regulations on matters affecting safety in transport over public highways. Includes specifications for vehicles and drivers.

International Air Transport Association (IATA) Dangerous Goods Regulations. Includes restrictions that apply to the acceptance of such articles by participating carriers. Provides detailed procedures required by ICAO.

International Civil Aviation Organization (ICAO) Technical Instructions for the Safe Transportation of Dangerous Goods by Air. Contains detailed instructions for safe international transport of dangerous goods by air.

International Maritime Organization (IMO), International Maritime Dangerous Goods (IMDG) Code. Provides detailed instructions for safe international transport of hazardous material by sea.

Joint Hazard Classification System (JHCS). This is the official DOD hazard classification database of ammunition and explosives. The U.S. Army Technical Center for Explosives Safety (USATCES) manages the JHCS for the Department of Defense Explosives Safety Board (DDESB). The JHCS contains hazard classification data for the Army, Navy, and Air Force.

Abbreviations and Acronyms

AA&E—Arms, Ammunition, and Explosives

ACA—Airlift Clearance Authority

AEF—Air and Space Expeditionary Forces

AFB—Air Force Base

AFGLSC—Air Force Global Logistics Support Center

AFI—Air Force Instruction

AFJI—Air Force Joint Instruction

AFJMAN—Air Force Joint Manual

AFMAN(AFM)—Air Force Manual

AFMAN(I)—Air Force Manual (Interservice)

AFMC—Air Force Materiel Command

AFOSH— Air Force Occupational Safety and Health

AFPTEF— Air Force Packaging Technology & Engineering Facility

AFR—Air Force Regulation

AFRIMS— Air Force Records Information Management System

AFSAC—Air Force Security Assistance Center

AFSC—United States Air Force Specialty Code (Joint Pub 1-02)

AFWCF—Air Force Working Capital Fund

AGR—American Goods Returned

PRIME AFGLSC— Air Logistics Center

AMC—Air Mobility Command

AMX—Air Mobility Express (Joint Pub 1-02)

AOR—Area of Responsibility

APOD—Aerial Port of Debarkation

APOE—Aerial Port of Embarkation

APS—Aerial Port Squadron

ATAC—Abbreviated Transportation Accounting Classification

ATOC— Air Terminal Operations Center

ATCMD—Advance Transportation Control and Movement Document

ATTLA—Air Transportability Test Loading Agency (AFMC/ASC)

BOL—Bill of Lading

BPA—Blanket Purchase Agreement

CAA—Competent Authority Approval

CAS—Combat Ammunition System

CBL—Commercial Bill of Lading (Synonymous with Commercial Paper/Commercial Forms)

CCP—Consolidation and Containerization Point

CDMC—CONUS Distribution Management Cell

CFR—Code of Federal Regulations

CIIC—Controlled Inventory Item Code

CLSS—Combat Logistics Support Squadrons

CMA—Centrally Managed Allotment (Used In-Conjunction with SDT)

CMOS—Cargo Movement Operations System

COE—Certification of Equivalency

CONUS—Continental United States (Joint Pub 1-02)

COR—Contracting Officer Representative

CRAF—Civil Reserve Air Fleet

CSS—Constant Surveillance Service

CULT—Common-User Land Transportation (Joint Pub 1-02)

DAAS—Defense Automated Addressing System

DCMA—Defense Contract Management Agency

DCS—Deputy Chief of Staff

DDC—Defense Distribution Center

DDN—Defense Data Network

DECA—Defense Cooperation Agreement

DFAS—Defense Finance and Accounting Service

DIC—Document Identifier Code

DIFM— Due-In From Maintenance

DLA—Defense Logistics Agency

DLMS—Defense Logistics Management System

DEMIL—Demilitarization

DESPS—-- Domestic Express Small Package Service

DOD—Department of Defense

DODAAC—Department of Defense Activity Address Code

DODAAD—Department of Defense Activity Address Directory

DOT—Department of Transportation

DRMS—Defense Reutilization and Marketing Service

DRU— Direct Reporting Unit

DSN— Defense Switch Network

DSS—Defense Security Service

DTR—Defense Transportation Regulation

DTS—Defense Transportation System

DTTS—Defense Transportation Tracking System

DWCF—Defense Working Capital Fund

EAF—Expeditionary Aerospace Forces

EC/EDI—Electronic Commerce/Electronic Data Interchange

EDI—Electronic Data Interchange (Joint Pub 1-02)

EPA—Environmental Protection Agency

ERRC—Expendability Recoverability Reparability Code

ESD— Electrostatic Discharge

ESP Codes—Emergency and Special Program Codes

ETA—Estimated time of arrival (Joint Pub 1-02)

ETM—electronic transmission (Joint Pub 1-02)

EU— European Union

FAK—Freight All Kinds

FAR—Federal Acquisition Regulation

FMS—Foreign Military Sales (Joint Pub 1-02)

FOA— Field Operating Agency

FOB—Free On Board

FY—fiscal year (Joint Pub 1-02)

GATES—Global Air Transportation Execution System

GBD—Government Business Day

GBL—government bill of lading (Joint Pub 1-02)

GBLOC—Government Bill of Lading Location

GFM/ETA—Global Freight Management/Electronic Transportation Acquisition

GOCARE—Government Cargo Recovery Efforts

GPC—Government Purchase Card

GSA—General Services Administration

GSD—General Support Division

GTN—Global Transportation Network

HAZMAT—--Hazardous Materials

HM—hazardous materials (Joint Pub 1-02)

HMIRS—Hazardous Materials Information Resource System

HQ—Headquarters (Joint Pub 1-02)

HT— Heat Treated

IATA—International Air Transport Association

IBS—Integrated Booking System

ICAO—International Civil Aviation Organization

IM—Inventory Manager

IMDG—International Maritime Dangerous Goods

IMO—International Maritime Organization

IPE— Industrial Plant Equipment

ISB—Intermediate Staging Base

ITV—In Transit Visibility

I2P—Industry Information Processor

JCS—Joint Chiefs of Staff

JDGACP—Joint DOD/GSA Astray Cargo Program

JHCS—Joint Hazardous Classification System

KD— Kiln Dried

LOA—Line of Accounting

LRS—Logistics Readiness Squadron

MAJCOM—Major Command

MAP—Military Assistance Program

MDD—Medical Dental Division

MILSTRIP—Military Standard Requisitioning and Issue Procedures

MIPR—Military Interdepartmental Purchase Request

MOA— Memorandum of Agreement

MORD—Miscellaneous Obligation/Reimbursement Document

MRM—#15 - Management Reform Memorandum – Reengineering Defense Transportation Documentation and Financial Processes

MRSP— Mobility Readiness Spares Package

MSC—Military Sealift Command

MSD—Materiel Support Division

MSL—Military Shipping Label

NMCS—Not Mission Capable Supply

NMFC—National Motor Freight Classification

NMWPM— Non-manufactured Wood Packaging Materials

NRTS—Not Reparable This Station

NSN— National/Nato Stock Number

O&M—Operation and Maintenance

OCCA—Ocean Cargo Clearance Authority

OCONUS—Outside Continental United States

OPLOC—Operating Location

ORM— Operational Risk Management

OSHA— Occupational Safety and Health Association

PCO—Procuring Contracting Officer

PD—Project Director

PDO—Publications Distribution Office

PHS&T—Packaging, Handling, Storage and Transportation

PMEL—Precision Measurement Equipment Laboratory

POD—Port of Debarkation

POE—Port of Embarkation

PR—Purchase Request

RCP— Reusable Container Program

RCS—Report Control Symbol

RDD—Required Delivery Date

RDS— Records Disposition Schedule

REPSHIP—Report of Shipment

RIC— Routing Identifier Code

RPM—Rapid Parts Movement

RPS—- Remote Processing Station

RSO— Radiation Safety Officer

SA—Systems Administrator

SAAM—Special Assignment Airlift Mission

SBSS—Standard Base Supply System

SCMS—Supply Chain Management Squadron

SCMW—Supply Chain Management Wing

SDDC— Surface Deployment and Distribution Command

SDDCTEA— Surface Deployment and Distribution Command Transportation Engineering Agency (Joint Pub 1-02)

SDN—Standard Document Number

SDR—Supply Discrepancy Report

SDT—Second Destination Transportation

SMAG—Supply Management Activity Group

SOFA—Status of Forces Agreement

SOR—--Source of Repair

SPI—Special Packaging Instruction

SRC—Security Risk Code

SSCO—Shipper Service Control Office

SSLO—Shipper Service Liaison Office

TAC—Transportation Account Code

TAMP—Tactical Air Missile Program

TCC—Transportation Component Command

TCMD—Transportation Control and Movement Document

TCN—Transportation Control Number

TDD—Time-Definite Delivery

TDR—Transportation Discrepancy Report

TFG—Transportation Facilities Guide

TMDE—Test, Measurement, and Diagnostic Equipment

TO— Transportation Officer

T.O.— Technical Order

TP—Transportation Priority

TPB—Third Party Billing

TRC— Technology Repair Center

TTL— Transportation Tracer Listing

UMMIPS—Uniform Materiel Movement and Issue Priority System

USAF—United States Air Force

USML—United States Munitions List

USPS—United States Postal Service

USTRANSCOM—United States Transportation Command

WCA—Water Clearance Authority

WCF—Working Capital Fund

WPOE—Water Port of Embarkation

WRM— War Reserve Materiel

WWX—Worldwide Express

ZULU—Time Zone Indicator for Universal Time

LM—Two-Level Maintenance

999 and 777— Priority indicators expressing urgency of movement.

Terms

463L System— Aircraft pallets, nets, tie down and coupling devices, facilities, handling equipment, procedures, and other components designed to interface with military and civilian aircraft cargo restraint systems. Though designed for airlift, system components may have to move internationally via surface to support geographic Combatant Commander objectives.

Abbreviated Transportation Accounting Classification (ATAC)—The ATAC is a 7-position alpha/numeric code that identifies the account to pay for movements by government bill of lading.

Accountable Official—The designated person who ensures that a system of internal procedures and controls for the portion of the entitlement and/or payment-related process under their cognizance is in place to minimize opportunities for erroneous payments and to ensure all procedural safeguards affecting proposed payments are observed; the Accountable Official supports their respective certifying officers with timely and accurate data, information, and /or service to ensure proper payments (i.e., payments that are supportable, legal, and computed correctly). See DOD 7000.14-R, DODFMR, Volume 5, Chapter 33, Accountable Officials and Certifying Officers.

Active RFID (aRFID)—uses an internal power source (battery) within the tag to continuously power the tag and it RF communication circuitry. Active RFID allows very low-level signals to be received by the tag (because the reader does not need to answer the tag), and the tag can generate high-level signals back to the reader, driven from its internal power source. Additionally, the Active RFID tag is continuously powered, whether in the reader field or not. Active RFID readers (interrogators) generally operate at the .3 mill-watt power level, and can provide communication ranges of 100 meters or more. Active RFID operating at 433.92 MHz is almost universally applicable over the globe and has approvals. Active RFID is a proven tool for providing inside-the-box, in transit visibility of contents in containers and pallets and it has mitigated some of the cost experienced during current deployment operations. The infrastructure to support deployment operations has begun fielding.

Agile Combat Support—The core competency that establishes the role of the logistics and combat support communities in the Global Engagement philosophy. Conceptually, this broadens the Air Force combat support perspective of activities to forge a seamless customer-based supply system, a reduced basing system, global reachback efficiency, improved acquisition processes, streamlined and responsive depot processes, early sustainment, rapid time definite transportation and lighter, more reliable combat equipment.

Agile Logistics—A revolutionary process change, in the Agile Combat Support role, that has effectively transitioned the Air Force logistics system to one based on rapid, time definite delivery. Agile Logistics uses high velocity, time-definite transportation to manage mission and logistics requirements while minimizing reliance on stockpiles of inventory. Many items must be processed rapidly and shipped from bases via express transportation to a depot/repair center or contractor for repair.

Air Mobility Express (AMX). AMX is an express airlift to move high priority (999/NMCS/MICAP/Agile Logistics/2LM/RPM/SOR materiel (greater than 150 lbs, hazardous, outsized) from a CONUS APOE to a theater APOD or hub. Cargo will move from the designated AMX aerial port hub via AMC—controlled airlift missions. USTRANSCOM will activate this service as directed by the theater Combatant Commander. See DTR, Part III, Chapter 302.

Air Transportability—The process of designing materiel to permit the loading and movement by Air Force aircraft.

Airlift Clearance Authority (ACA)—The activity that controls the entry of cargo (including personal property) into the airlift system under provisions of the DTR, Part II. The ACA also performs logistics management functions such as CONUS export shipments, determining air eligibility, responding to tracing and status queries, expediting, and providing consignment instructions for mobile units.

Automatic Identification Technology (Primary)—-Used in the Defense Transportation System (DTS) are bar code labels (both linear and 2-dimensional) and active Radio Frequency Identification (RFID) (Active and Passive). Passive RFID is an emerging capability in the USAF. AIT is used to capture and report data to CMOS to support additional processing.

Bar Coding—Bar Coding (Bar Code Symbol) is a graphic representation of numeric or alphanumeric data in the form of variable width bars and spaces. The general format of a bar code symbol consists of a leading margin, start character, data or message characters, check character (if any), stop character, and trailing margin. Bar codes are read by an optical scanning device, such as a laser, then translated (decoded) and transferred to a Host computer for subsequent data manipulation. Using bar code is one method of providing fast, virtually error-free data input. The use of “multi-row”, “stacked” or “two dimensional” bar codes allows the encoding of more information in a smaller space than with conventional, single-row bar codes.

Best Value Carrier—A carrier selected to transport materiel in support of Agile Logistics requirements based on performance, values and cost. Refer to the DTR, Part II, Definitions, for additional guidance.

Bill of Lading, Commercial (CBL)—A CBL designates the receipt of goods shipped on board a transportation conveyance (e.g., truck, rail, ship, airplane) and signed by the carrier or the carrier's agent who contracts to carry the cargo. A CBL states the terms on which the goods are

carried. Carrier documentation used for transportation of shipments, such as that used by small package express carriers. It includes the commercial procedures related to the use of such documentation. The term commercial bill of lading is synonymous with the terms Commercial Paper and Commercial Forms.

Bill of Lading, Government (GBL)—A government document used to procure transportation and related services from commercial carriers.

Break Bulk Point (BBP)—A transshipment point which receives and breaks down multi-destination bulk consolidations and distributes the individual shipments to the ultimate consignee.

Carrier—Any individual, company, or corporation engaged in transporting cargo or passengers for pay.

Carrier Invoicing Model—The TPPSTPPS processing scenario in which the carrier generates and submits the priced Bill of Lading (BL) data to TPPSTPPS. The shipper does not submit any BL data to TPPSTPPS but has the right to change price/data prior to approval of payment (if it is not automatically approved first).

Case— Can be either an exterior container within a palletized unit load or an individual shipping container.

Certifying Officer—Responsible for information stated in a voucher, supporting documents, and records; legality of a proposed payment under the appropriation or fund involved; certifies the TPPSTPPS Monthly Billing Statement. This person must meet the requirements of DOD 7000.14, DODFMR, Volume 5, Chapter 33, Accountable Officials and Certifying Officers.

Classified Cargo (Classified Information)—Information or material that is (a) owned by, or under the control of the United States Government; and (b) determined under Executive Order 12356 or prior orders and DOD 5200.l-R to require protection against unauthorized disclosure; and (c) so designated Top Secret, Secret, or Confidential.

Combatant Commander—The commander of a unified command having responsibility and control for military operations in a designated geographical area.

Commercial Packaging— The packaging methods and materials normally used by the commercial supplier.

Common Carrier—A transportation company, operating under a certificate of public convenience and necessity, serving the public impartially.

Common User Land Transportation (CULT)—Point-to-point in-theater land transportation service operated by a single Service for common use by two or more services.

Consolidation— Is accomplished by placing the unit packages into a larger container. Consolidation containers may be constructed of fiberboard, paper overlaid veneer, plywood or lumber. They may be demountable or nondemountable and are usually secured to a pallet or to a skidded base. Some consolidation containers are designed to be compatible with the requirements of the 463L Materials Handling System. Others are designed to be used as inserts in transporters (i.e. CONEX/ISOs, MILVANS or SEAVANS) or to be used as a separate shipping container.

Container Design Retrieval System (CDRS)— A management system program application located at AAC/YBC, Eglin AFB FL. It provides a DOD centralized data base for storing, retrieving, and analyzing existing container designs and test information concerning specialized containers. Using CDRS avoids duplication of specialized container designs and promotes re-use. Military Standard (MIL-STD) 2073-1, Appendix H, Procedures for Compliance with Container Design Retrieval System (CDRS) Requirements, govern the CDRS.

Continental United States—(DOD) United States territory, including the adjacent territorial waters, located within North America between Canada and Mexico. Also called CONUS. (Joint Pub 1-02).

Contract Carrier—Usually refers to a motor carrier, other than a common carrier, hauling under contracts on which a permit is issued by a government regulatory body.

Controlled Cargo (See Protected Cargo)—Items that require additional control and security as prescribed in various regulations and statutes. Controlled items include money, negotiable instruments, narcotics, registered mail, precious metal alloys, ethyl alcohol, and drug abuse items.

CONUS Distribution Management Cell (CDMC).—Refer to Chapter 11, Paragraph 11.1.

Corrosion— Deterioration of material due to electrochemical or chemical attack resulting from exposure to natural or induced environmental conditions or from the destructive attack of fungi or bacteria.

Damage— Breakage, denting, marring, distortion, displacement, or abrasion of an item. The term also applies to the malfunction or inaccuracy of an item having mechanically, electrically, or electronically functioning parts or requiring calibration.

Debarked Wood— Wood that has been subjected to any process that results in the removal of bark.

Defense Automatic Addressing System Center (DAASC)— Defense Logistics Agency services for designing, developing, and implementing logistics solutions that improve customers' requisition processing and logistics management processes worldwide.

Defense Transportation System—(DOD) That portion of the Nation's transportation infrastructure which supports Department of Defense common-user transportation needs across the range of military operations. It consists of those common-user military and commercial assets, services, and systems organic to, contracted for, or controlled by the Department of Defense. Also called DTS. (See also common-user transportation; transportation system in Joint Pub 1-02).

Defense Transportation Tracking System (DTTS)— The DTTS program consists of a satellite-enabled computerized tracking system and a program management office (PMO) with a staff that manages and operates the system and uses information from the system to provide emergency response assistance. The DTTS PMO's primary mission is to report and facilitate immediate emergency response to en route incidents or accidents involving AA&E and other sensitive materiel (OSM) moving via commercial motor carrier, barge, or towboat within the continental United States, Alaska, and Canada.

Demilitarization (DEMIL)—The act of destroying the offensive or defensive advantages inherent in certain types of equipment and materiel. The term comprehends mutilation, dumping

at sea, scrapping, burning, or alteration designed so as to prevent the further use of such equipment and materiel for its originally intended military or lethal purpose.

Department of Defense Activity Address Code (DODAAC)—A six-position alphanumeric code assigned to identify specific activities that are authorized to ship or receive materiel and to prepare documentation or billings.

Deployment and Distribution Flight (LGRD). Responsible for the centralized command and control, planning, and execution of all wing deployment operations and the distribution of cargo, passengers, and personal property. The Installation Deployment Officer (IDO) is appointed from within the Deployment & Distribution Flight. The flight is responsible for the execution of squadron Air & Space Expeditionary Forces (AEF) Management, squadron Unit Type Code (UTC) Management, In—Garrison Expeditionary Site Planning, and Installation Deployment Planning. The Deployment & Distribution Flight also operates a Deployment Control Center (DCC), Reception Control Center (RCC), and Installation Deployment Readiness Cell (IDRC), as necessary. This flight is also responsible for the management of the wing's War Reserve Materiel (WRM), Support Agreements. Additionally, the flight is the single installation transportation authority responsible for planning, managing and executing the movement of personnel; the shipment and receipt for DoD cargo during day-to-day and contingency operations; acquisition and arrangement of Personal Property movement services and operate Small Air Terminals for Cargo and Passenger Movement functions at locations with no Aerial Port Squadron or other host support.

Deterioration— The gradual decline or impairment of an items serviceability, quality, value, or usefulness.

Diversion—(DOD) A rerouting of cargo or passengers to a new transshipment point or destination or on a different mode of transportation prior to arrival at ultimate destination. (Joint Pub 1-02).

Door—to-Door Delivery. This is the key transportation policy supporting Agile Logistics/2LM/RPM/SOR. Door-to-door delivery involves express carrier pick-up of cargo at the depots/repair centers, contractor facilities, or bases; and time-definite delivery of the cargo to a designated receiving location in CONUS or OCONUS, while maintaining in transit visibility (ITV). Door-to-door delivery will also be used for Agile Logistics/2LM/RPM/SOR retrograde cargo shipments.

Electronic Bill (eBill)—Functionality in TPPSTPPS that is used to request a debit (from a shipper to a carrier) or a credit (from a carrier to a shipper). The party initiating the eBill will not be paid until the other party approves it. An eBill is most commonly used to reconcile or adjust shipment payment amounts for shipments that have already been approved, and prior to the Monthly Billing Statement being generated.

Electrostatic Discharge (ESD)— A transfer of electrostatic charge between bodies at different electrostatic potentials, caused by direct contact or induced by an electrostatic field. Very damaging to electrical components

Electrostatic Discharge Sensitive (ESDS) Items— Parts or assemblies that are sensitive to ESD damage.

Export Traffic Release (ETR)—Shipping instructions issued by a clearance authority in response to an offering, which specify the mode of shipment and the means by which an export shipment will move.

Express Carriers—Commercial companies that provide overnight delivery of cargo within the continental United States and 2-3 day delivery to most overseas locations.

Exterior Pack— A container, bundle, or assembly that is sufficient by design and construction to protect unit and intermediate packs and contents during shipment and storage. This can be a unit pack or a container with any combination of unit or intermediate packs.

Fast Pack— A family of standard, short-life, reusable, cushioned containers. Fast Pack design permits shipment of a large number of different items within certain limits of size, weight, configuration, fragility, and environmentally sensitive characteristics. See Federal Specification PPP-B-1672, *Box, Shipping, Reusable with Cushioning*, and Technical Order (T.O.) 00-85B-3, *How to Package Air Force Spares*.

Fleet Post Office (FPO)—A Navy activity established within the CONUS, collocated with a Postal Concentration Center, provides a standard mail address for forces afloat, mobile shore-based units and activities overseas, directory assistance for Navy mail, and maintaining liaison with and furnishing mail routing and dispatching instructions to appropriate civil and military postal authorities.

Foreign Military Sales (FMS)—That portion of United States security assistance authorized by the Foreign Assistance Act of 1961, as amended, and the Arms Export Control Act of 1976, as amended. This assistance differs from the Military Assistance Program and the International Military Education and Training Program in that the recipient provides reimbursement for defense articles and services transferred.

Global Decision Support System (GDSS)—AMC's force level C2 system supporting 618 Tanker Airlift Control Center (TACC) execution authority for effective airlift mission management. It provides AMC accurate, near real-time data required for making decisions concerning the deployment and employment of AMC resources. GDSS interfaces with several C2 and transportation systems, including C2IPS, Consolidated Air Mobility Planning (CAMPS), GATES, and USTRANSCOM's GTN or IGC.

Government Business Day (GBD)—A business day, Monday through Friday, that is not a Federal Holiday.

Government-wide Purchase Card (GPC)—Government –wide commercial purchase card, similar in nature to a commercial credit card, issued to authorized agency personnel to use to acquire and to pay for supplies and services.

Green Sheet Procedures—A procedure whereby specifically identified cargo in the military airlift (AMC) system may gain movement precedence over other priority cargo of the sponsoring service.

Gross Weight—(DOD, NATO) 1. Weight of a vehicle, fully equipped and serviced for operation, including the weight of the fuel, lubricants, coolant, vehicle tools and spares, crew, personal equipment, and load. 2. Weight of a container or pallet including freight and binding. See also net weight. (Joint Pub 1-02).

Hazardous Material (HAZMAT) or Regulated Material— A substance or material that the Secretary of Transportation has determined to be capable of posing unreasonable risk to health, safety, and property when transported in commerce, and which has been so designated. This includes all items listed as hazardous in Title 49, Code of Federal Regulations (CFR), and AFMAN 24-204_IP, *Preparing Hazardous Materials for Military Air Shipments*. Included is any materiel that, because of its properties, is flammable, corrosive, an oxidizing agent, explosive, toxic, radioactive, or unduly magnetic. Unduly magnetic means that sufficient magnetic field strength is present to cause navigational deviations to the compass sensing devices of an aircraft.

Hazardous Waste— Any material that is subject to the hazardous waste manifest requirements of the Environmental Protection Agency (EPA) specified in 40 CFR, part 263, and as defined in 40 CFR 261.3.

High Value Item—A cargo shipment which exceeds the carrier's normal liability for loss and damage during transportation and which requires the TO office to request the carrier to purchase additional insurance to ensure liability for full shipment value in the event of loss or damage.

Information Industry Processor (I2P)— I2P is a module within CMOS that provides an interface with commercial carriers. I2P incorporates commercial carrier software that enables CMOS to print commercial carrier labels.

Intermediate Pack— A wrap, box, or bundle that contains two or more unit packs of identical items.

In transit Visibility—(DOD) The ability to track the identity, status, and location of Department of Defense units, and non-unit cargo (excluding bulk petroleum, oils, and lubricants) and passengers; medical patients; and personal property from origin to consignee or destination across the range of military operations. (See also global transportation network in Joint Pub 1-02). Successful ITV is drillable cargo and passenger manifest data received by the Global Transportation Network (GTN OR IGC). GTN OR IGCis the designated DOD system for ITV. Effective and reliable ITV is based on timely and accurate availability of source data information. Movements are not considered complete until ITV has been achieved.

JTAV— The capability designed to consolidate source data from a variety of joint and Service automated information systems to provide joint force commanders with visibility over assets in-storage, in-process, and in transit. (JP 1-02)

Level of Protection—This term can have two different meanings, as explained below.

Packaging Level of Protection:—A means of specifying the level of military preservation and packing that a given item requires to ensure that it is not degraded during shipment and storage. Refer to Chapter 8, paragraph 8.9 for complete details.

Transportation Level of Protection:—The protective service codes used for sensitive and classified shipments to minimize risk of accidental exposure or undetected deliberate security compromise. Refer to Chapter 5 for complete details.

Line Haul—Transportation of freight from one point to another excluding local pickup, delivery, and switching.

Line of Accounting—Alphanumeric listing which identifies the appropriation and fund cite authority to be used in payment of transportation. Lowest over-all Cost—The lowest aggregate

of shipment costs known or a reasonable estimate. It includes a combination of cost factors, such as line haul, accessorial charge, fuel charge and port handling.

Manifest (Cargo)—(—A document specifying in detail the passengers or items carried for a specific destination.

Marking—Numbers, nomenclature, or symbols imprinted on items or containers for identification during handling, shipment, and storage. (See MIL-STD-129)

Military Van (MILVAN)—Military-owned demountable container, conforming to United States and international standards, operated in a centrally controlled fleet for movement of military cargo.

Net Weight——(DOD) Weight of a ground vehicle without fuel, engine oil, coolant, on-vehicle materiel, cargo, or operating personnel. (Joint Pub 1-02).

Nuclear Weapons Related Material NWRM (NWRM-AF)—Classified or unclassified nuclear weapon system components whose purpose is to prearm, arm, launch or release a nuclear weapon and require special controls to maintain and protect system integrity and security, as well as engineering and design information (e.g. guidance set, classified critical components, launch control, use control equipment).

Obligation—A formal reservation of funds that ensures funds are available for payment of Government contractual obligations. In TPPSTPPS, the obligation equals the estimated shipping charge identified in the bill of lading. The AF Form 406, Miscellaneous Obligation/Reimbursement Document, AF Form 616, Fund Cite Authorization, or DD Form 448, Military Interdepartmental Purchase Request, may be used to obligate funds.

Ocean Cargo Clearance Authority (OCCA)—The Surface Deployment and Distribution Command activity which books Department of Defense-sponsored cargo and passengers for surface movement, performs related contract administration, and accomplishes export/import surface deployment and distribution functions for Department of Defense cargo moving within the Defense Transportation System. See Water Clearance Authority.

Outsize Cargo—See DTR, Part II, Chapter 203

Over Freight—Freight (packaged or loose) received that exceeds quantity documented.

Oversize Cargo—See DTR, Part II, Chapter 203

Packaging—The cleaning, drying, preserving, cushioning, wrapping, blocking, packing, marking, and unitizing of systems/equipment/items are considered the packaging requirements as specified in MIL-STD-2073-1D, Department of Defense Standard Practice for Military Packaging. The packaging process and procedures are used to protect systems, equipment, and items from deterioration and damage

Packing—The assembling of materiel into an exterior pack, consisting of a container, bundle, or assembly, with the necessary blocking, bracing, cushioning, weatherproofing, reinforcement and marking.

Packaging, Handling, Storage and Transportation (PHS&T)—Encompasses transportability, packaging, handling, storage, and those elements of deployment and distribution related to systems and equipment development and acquisition.

Pallet, 463L—Aluminum air cargo pallet, 88 inches by 108 inches, on which shipments are consolidated for movement by Air Mobility Command.

Pallet, Warehouse—A horizontal platform device, usually wooden, about 40 inches long, 48 inches wide, and 5 inches high, used as a base for assembling, storing, handling, and transporting materials and products in a unit load.

Palletization—Is the most common method of unitization because of its broader application in the field. MIL-HDBK-774, issued for guidance purposes only, describes the application for standard pallets and contains information such as box patterns, weight limits and height/overhang limits.

Palletized Unit Load—Quantity of any item, packaged or unpackaged, that is arranged on any pallet in a specified manner and securely strapped or fastened thereto so that the whole is handled as a unit.

Passive RFID (pRFID)—US Air Force is still evolving pRFID policy.

Partial Shipment Unit—A shipment unit separated at the origin shipping activity into two or more increments with each increment identified and documented separately

Personal Effects—Household goods, baggage, mobile homes and privately owned vehicles of Department of Defense personnel.

Pilferable Cargo—Pilferable materiel includes items that are vulnerable to theft because of their ready resale potential. Pilferable items include, but are not limited to cigarettes, alcoholic beverages, cameras, and electronic equipment. See protected cargo.

Port of Debarkation (POD)—The geographic point at which cargo or personnel are discharged. May be a seaport or aerial port of debarkation. For unit requirements, it may or may not coincide with the destination.

Port of Embarkation (POE)—The geographic point in a routing scheme from which cargo or personnel depart. May be a seaport or aerial port from which personnel and equipment flow to port of debarkation. For unit and non-unit requirements, it may or may not coincide with the origin.

TPPSTPPS—An electronic on-line transaction payment and tracking system developed by US Bank.

TPPSTPPS Administrator—The person appointed to act as a coordinator within an organization to provide on-site support to TPPSTPPS users. This role involves working with the TPPSTPPS teams during implementation phases, maintaining TPPSTPPS profiles including the set up of new carriers, setting up new TPPSTPPS users within their organization, and providing other assistance to system users.

Preservation—The processes and procedures used to protect materiel against corrosion, deterioration and physical damage during shipment, handling and storage. As applicable, preservation includes cleaning, drying, applying preservative, wrapping, cushioning, containers (unit and intermediate) and complete identification markings up to but not including the exterior shipping container

Protected Cargo—Those items designated as having characteristics that require that they be identified, accounted for, secured, segregated, or handled in a special manner to ensure their

safeguard or integrity. Protected cargo is subdivided into controlled, pilferable, and sensitive cargo as defined elsewhere alphabetically in this glossary

Rapid Parts Movement (RPM)—This assures all reparable assets (including Agile Logistics/ 2LM) and selected consumables are shipped via commercial express carriers using best value selection process. Reduced inventory levels resulting in overall logistics savings and mission sustainment offset increased transportation costs.

Reachback and Resupply—An airlift capability will exist to allow the warfighting Combatant Commander to reachback to the CONUS for resupply of critical aircraft parts as early as C+1.

Reefer Cargo—Perishable commodities that require refrigerated (chill and freeze) stowage at prescribed temperatures while in transit. Exclude cargo authorized for storage in ventilated holds.

Reparable (Repairable) Item—An item which, by the application of engineering, economic and other factors could be reasonably reconditioned or restored to a serviceable condition through regular repair processes. Identify depot-repairable Air Force items on the shipping document with the Expendability, Recoverability and Reparability Category (ERRC) Codes C,S or T or by ERRC designators XD1, XD2, ND2, or on the package with a materiel condition tag/label.

Required Availability Date (RAD)—The date that end items and concurrent spare parts are committed to be available for transportation to a Military Assistance Program recipient.

Required Delivery Date (RDD)—DOD) A date, relative to C-day, when a unit must arrive at its destination and complete offloading to properly support the concept of operations. Also called RDD. (Joint Pub 1-02).

Retrograde Cargo—DOD) Cargo evacuated from a theater of operations. (Joint Pub 1-02).

Reusable Container—- A shipping container that can be recovered and re-used without impairment of its protective function and which can be repaired, refurbished to prolong its life; or modified or retrofitted to adapt it for shipment of items other than that for which it was originally intended.

Review Official—A military member or civilian employee of the Department who is designated in writing to conduct pre- and post-payment reviews, to issue and control inquiries and to initiate charges against the certifying, disbursing, and accountable officials for financial irregularities. See DOD 7000.14-R, DODFMR, Volume 5, Chapter 33 Accountable Officials and Certifying Officers.

Roll-on/Roll-off (RO/RO) Cargo—Vehicles, including Privately Owned Vehicles, or shipment units loaded aboard a trailer-type conveyance that are transported to a vessel at a port of loading, rolled on the vessel, stowed and rolled off the vessel at the port of discharge.

Routing Authority—An activity that designates modes or provides routing instructions for shipments requiring clearance before movement

Scrap—Wood and fiberboard packaging materials and containers for which the cost of recovery exceeds the value to the government for re-use.

Seavan—Commercial or government-owned (or leased) shipping containers that are moved via ocean transportation without bogey wheels attached, i.e., lifted on and off the ship.

Destination Transportation/Centrally Managed Allotment (SDT/CMA)—SDT/CMA pays for certain movements of non-AFWCF materiel. This includes movements of munitions, aircraft engines, and investment items managed on an Air Force Table of Allowance.

Secure Holding—Assistance provided by an DOD and contractor facilities to a commercial carrier transporting AA&E or classified shipments and CCI by providing secure holding areas in the interest of public safety and national security.

Sensitive Cargo (See Protected Cargo)——Small AA&E that are a definite threat to public safety and can be used by militant, revolutionary, criminal, or other elements for civil disturbances, domestic unrest, or criminal actions.

Shipper—A service or agency activity (including the contract administration or purchasing office for vendors) or vendor that originates shipments. The functions performed include planning, assembling, consolidating, documenting, and arranging material movement.

Shipper Service Control Office (SSCO)—A DTR term used to describe an activity established by a military service or agency to perform logistics management functions such as serving as an airlift clearance authority. This instruction and the governing Defense Transportation Regulations refer to these functions separately as the ACA, WCA, and Ocean Cargo Clearance Authority (OCCA).

Source of Repair (SOR) —SORs are regional facilities that provide intermediate-level maintenance repair capabilities for designated USAF units within a theater of operations. They are designed to support operational requirements congruent with Air Force Vision 2020. SORs reduce the forward support logistics footprint and dependence on strategic airlift.

Special Assignment Airlift Mission (SAAM)—A mission by Air Mobility Command (other than the 89th Airlift Wing) for special pick-up or delivery normally at points other than established Air Mobility Command routes. (See Defense Transportation Regulation, Parts I, II and III).

Special Packaging Instruction (SPI)—SPI drawings are detailed packaging instructions, accompanied with a 3-D drawing (graphic), used to construct packages/containers for items requiring special preservation, packing and protection. A SPI drawing generally depicts details for special blocking, bracing, cushioning, shock mounts, tiedown devices and positioning of the item in the package/container. Additionally, a SPI illustrates packaging requirements for one item or a limited group of items of the same form, fit and function. SPIs are prepared on DD Form 2169, Special Packaging Instruction, IAW MIL-STD-2073-1.

Special Packaging Instructions Retrieval & Exchange System (SPIRES)—The SPIRES is the centralized Air Force electronic library (repository) for Air Force managed and Contractor Inventory Control Points weapon system specific support SPIs. The Air Force SPI program, which encompasses the process necessary to develop a SPI into service, includes the identification of the item packaging requirements (fragility, design, form, fit and function), the computer graphic development and illustration of the SPI in a packing component level breakout, exchange of the SPI into SPIRES and retrieval of the SPI for base/unit mission support.

Split Shipment Unit—A whole or partial shipment unit separated at transshipment point into two or more increments with each increment identified and documented separately.

Standard Document Number (SDN)—A locally developed alphanumeric code that is utilized by accounting to track each obligation record through all accounting phases.

Standard Pack—A pack for which the method of preservation, packaging materials and the shipping container have been standardized. Generally, items chosen for standard packs require less cushioning than those that need Fast Pac

System Access Request (SAR)—A Defense Automatic Addressing System Center web-based form for requesting a User's ID and password to prepare and respond to electronic SF 364 (ROD) in the DODWeb SDR system.

TAV—The capability to provide users with timely and accurate information on the location, movement, status, and identity of units, personnel, equipment, materiel, and supplies. It also includes the capability to act upon that information to improve overall performance of the DOD logistic practices. (JP 1-02).

Tare Weight——(DOD) The weight of a container deducted from gross weight to obtain net weight or the weight of an empty container. (Joint Pub 1-02).

Technology Repair Center (TRC)—An Air Force facility designated to repair, modify or otherwise process a specific asset or weapon system.

Theater——(DOD) The geographical area outside the continental United States for which a commander of a combatant command has been assigned responsibility. (Joint Pub 1-02).

Theater-assigned Transportation Assets—DOD) Transportation assets that are assigned under the combatant command (command authority) of a geographic combatant commander. (See also combatant command (command authority); single manager for transportation in Joint Pub 1-02.

Theater Delivery System.—A two-way movement system established by the supported Combatant Commander to integrate theater air, land and water transportation systems. See DTR, Part III, Chapter 302.

Third Party Billing (TPB)—A procedure which allows centralized billing for AFWCF and SDT/CMA TACs. This process can only be used with Headquarters United States Air Force/TO certified Third Party Billing carriers.

Ton—A unit of measurement as follows.

Short(ST)— 2,000 lbs.

Long (LT)—2,240 lbs.

Measurement (MT)—40 cubic ft.

Metric (MET)—2,204.6 lbs.

Transportability——(DOD) The capability of materiel to be moved by towing, self-propulsion, or carrier via any means, such as railways, highways, waterways, pipelines, oceans, and airways.

Transportation Account Code (TAC)—A four-digit code that identifies the appropriate service, agency, Foreign Military Sales case code, or contractor account responsible for funding Defense Transportation System transportation charges. The Master TAC Reference Table is linked from website https://www.afmc-mil.wpafb.af.mil/HQ-AFMC/LG/LSO/lol/ under Transportation Funding.

Transportation Component Command——(DOD) The three component commands of USTRANSCOM: Air Force Air Mobility Command; Navy Military Sealift Command; and Army Surface Deployment and Distribution Command. Each transportation component command remains a major command of its parent Service and continues to organize, train, and equip its forces as specified by law. Each transportation component command also continues to perform Service-unique missions. Also called TCC. (See also United States Transportation Command in Joint Pub 1-02).

Transportation Control Number (TCN)—The DOD standard shipment identifier composed of a l7-position number assigned to control a shipment unit throughout the transportation cycle.

Transportation Officer (TO)—The single and responsible person designated by the installation commander as the materiel movement manager for the facility with authority to complete assigned duties including funds obligation. Since duties include funds obligation, the person designated as TO cannot be a contractor. Also included are rules subsequently promulgated by the US Department of Transportation, the International Civil Aviation Organization, the International Air Transport Association, the International Maritime Dangerous Goods Code, the Occupational Safety and Health Administration, the American National Standards Institute, the International Organization for Standardization, Environmental Protection Agency, the Nuclear Regulatory Commission, the United Nations, and the US Postal Service.

Transportation Plan—A Transportation Plan is required if the FMS purchaser proposes to take delivery or custody of classified material in the U.S. and use its own facilities and transportation for onward movement to its territory.

Transportation Priorities— (DOD) Indicators assigned to eligible traffic which establish its movement precedence. Appropriate priority systems apply to the movement of traffic by sea and air. In times of emergency, priorities may be applicable to continental United States movements by land, water, or air. (Joint Pub 1-02).

Two-Level Maintenance (2LM)—2LM is a logistics program used to transfer the repair-level of select items from base to depot, eliminating high overhead and resource costs. The three-level maintenance (3LM) process of on-system, base level and depot repair continues for a number of items. The task for transportation is to move 2LM assets between issue, use and repair points in a time-definite manner.

Unitization—Assembly of exterior packs of one or more line items of supply into a single load so that the load can be handled as a unit through the distribution system. Unitization (unitized loads or unit loads0 encompasses consolidation in a container, placement on a pallet or load base, or securely binding together. The advantages are reduced damage, increased safety from handling, reduced pilferage and efficient utilization of space

Water Clearance Authority (WCA)—An activity that controls and monitors the Continental United States flow of cargo into Continental United States water terminals.

Wood Packaging Material (WPM)—Non-Coniferous (Hardwood) and Coniferous (Softwood) packaging material used in supporting, protecting, or carrying a commodity (includes dunnage). Examples of WPM include but are not limited to pallets, skids, pallet collars, containers, crates, boxes, cases, bins, reels, drums, load boards, and dunnage. Wood packaging made of exempt materials but combined with solid wood components must still be treated and marked. Does not include processed wood materials and manufactured wood products.

Working Capital Fund— (DOD) A revolving fund established to finance inventories of supplies and other stores, or to provide working capital for industrial-type activities. (Joint Pub 1-02). In addition, these assets are identified by fund code 6C and 64 on the DD Form 1348-1A.

Attachment 1 (LITTLEROCKAFB)

GLOSSARY OF REFERENCES AND SUPPORTING INFORMATION

References

AFI 24-203, *Preparation and movement of Air Force cargo*, 2 November 2010

AFMAN 23-110, *USAF Supply Manual*, 1 April 2009

AFMAN 33-363, *Management of Records*, 1 March 2008

TO 00-85-20, *Engine Shipping Instructions*, 15 April 2008

Abbreviations and Acronyms

AF —Air Force

AF IMT— Air Force Information Management Tool

AFMAN—Air Force Manual

AW—Air Wing

BCM—Base Container Manager

LRS—Logistics Readiness Squadron

MAJCOM—Major Command

MICAP—Mission Capable

MIPR—Military Interdepartmental Purchase Request

OPR—Office of Primary Responsibility

PMEL—Precision Measurement Equipment Laboratory

RCP—Reusable Container Manager

RDS—Record Disposition Schedule

SDS—Same Day Service

Attachment 2

PREPARATION OF DD FORM 1149, REQUISITION AND INVOICE/SHIPPING DOCUMENT

NOTE: **Shippers are to transition to the automated DD Form 1149 and discontinue use of the manual DD Form 1149 as soon as possible.**

A2.1. DD Form 1149, *Requisition and Invoice/Shipping Document*. This form is used for non-MILSTRIP shipment processing. The shipper requests non-MILSTRIP shipment support to the TO on a DD Form 1149. The shipper must provide written authority for movement when requested by Cargo Movement Section. An automated DD Form 1149 is available at the following website: **https://lsotools.wpafb.af.mil**/. New users of this web form should read the User's Manual before registering to use the form. The shipper should use the following as additional guidance in preparing the DD Form 1149. After completion by the shipper, the information is entered into CMOS.

A2.1.1. Block 1, Shipper's unit/office symbol, address, and phone number (DSN and Commercial).

A2.1.2. Block 2, Address of consignee. Requires formatted address to include the DODAAC as the first six positions of the address.

A2.1.3. Block 3, Name and phone number (DSN and Commercial) of consignee.

A2.1.4. Block 4, Fund cite obligated for movement charges. (Usually shipper's funds or local O&M). Shipper must provide a valid LOA and SDN.

A2.1.5. Block 4(a), Item no.

A2.1.6. Block 4(b), National stock number (NSN) and nomenclature. If NSN is unavailable, use manufacturer's part number if applicable, and provide complete description of the item. Identify all classified shipments with appropriate security classification. Also, describe in detail all unclassified material that is considered sensitive or requires added protective service. Applicable DEMIL Codes must be supplied by the shipper. Likewise, hazardous material shipments must be clearly documented to reflect the proper shipping name. Shippers can prepare one DD Form 1149 for multiple items, turned in at the same time and moving to the same destination/consignee. However, a separate DD Form 1149 will be prepared by the shipper to distinguish between general, classified and hazardous material. **NOTE:** For all shipments that DO NOT contain classified, sensitive, protective or hazardous material, the following statement will be inserted and initialed by the shipper: "This shipment does not contain any classified, sensitive, protective or hazardous material." For shipments of TMDE/PMEL equipment, also see paragraph 7.2.3.1.

A2.1.7. Block 4(c), Unit of issue.

A2.1.8. Block 4(d), Quantity.

A2.1.9. Block 4(e), Supply action – enter quantity being shipped or transferred.

A2.1.10. Block 4(f), Type of container – carton, wooden or metal box, skid, etc., (complete as applicable).

A2.1.11. Block 4(g), Container numbers – number containers if more than one and indicate in this block the container number in which the particular item is located (complete as applicable).

A2.1.12. Block 4(h), Unit price.

A2.1.13. Block 4(i), Total shipment unit cost.

A2.1.14. Block 5, (requisition date) date shipment offered for movement.

A2.1.15. Block 6, TCN (TO complete).

A2.1.16. Block 7, RDD (also see block 9).

A2.1.17. Block 8, Transportation priority based on RDD.

A2.1.18. Block 9, Authority for shipment. Shippers will provide written authority for expedited movement. See Table 3.2., Note 1.

A2.1.19. Block 10, Signature of accountable person authorizing government funds for movement.

A2.1.20. Block 11(a), Voucher number. If not used, may be used to provide name and unit of person signing in block 10.

A2.1.21. Block 11(b), Date of voucher. If not used, may be used to provide phone number of person signing in block 10.

A2.1.22. Block 12, Date shipped (TO complete).

A2.1.23. Block 13, Mode of shipment (TO complete).

A2.1.24. Block 14, Bill of lading number (TO complete).

A2.1.25. Block 15, Air movement designator or Port Reference #.

A2.1.26. Block 16, TAC only for over-the-ocean or intra theater shipments via AMC/MSC/SDDC (TO complete).

A2.1.27. Block 17, Special handling code(s) (TO complete).

A2.1.28. Block 18, names of person(s) who (1) received; (2) in-checked; (3) and packed the shipment. TO also completes the final shipment configuration of this block.

A2.1.29. Block 19, Receipt (N/A).

A2.1.30. Block 20, Receiver's Voucher No. (N/A).

A2.2. Minimum Distribution:

A2.2.1. Original maintained by TO.

A2.2.2. One copy to shipper.

A2.2.3. One copy in outside packing list unless shipment is classified.

A2.2.4. One copy to consignee along with copy of BOL if electronic transmission fails or is not available.

Attachment 3

AIR FORCE PACKING LEVELS OF PROTECTION

A3.1. Determining asset protection requirements. The following factors are to be considered when determining the individual asset protection requirements:

A3.1.1. Intended use (immediate use or storage).
A3.1.2. Destination (CONUS or overseas).
A3.1.3. Mode of movement (air or surface).
A3.1.4. Projected storage type (indoor or outdoor) and known weather patterns (i.e., extreme heat, cold, rain) that may affect asset serviceability.

A3.2. Personal Experience. In addition to the above, the Packaging Specialist may draw on personal expertise and/or any other available technical information when determining appropriate packaging levels.

A3.3. Retrograde Materiel. Retrograde materiel (serviceable and unserviceable) will be packaged to maintain the degree of serviceability and protection of the materiel being returned.

Figure A3.1. AF Recommended Levels of Packaging Protection

AF RECOMMENDED LEVELS OF PACKAGING PROTECTION	PACK
SECURITY ASSISTANCE/FMS/GRANT AID (WHEN OUTSIDE STORAGE IS ANTICIPATED/WILL BE USED, UNLESS OTHERWISE DIRECTED BY COUNTRY)	A
SECURITY ASSISTANCE / FMS / GRANT AID (WHEN INSIDE STORAGE IS ANTICIPATED/WILL BE USED, UNLESS OTHERWISE DIRECTED BY COUNTRY)	B
WAR RESERVE MATERIEL	A
WAR RESERVE MATERIEL (<=25 LBS and <= 1 CU')	B
DELIVERY TO WHOLESALE DEPOT STOCK / CONUS INDOOR STORAGE	B
CONUS / OVERSEAS NMCS / 999 / 777	B
CONUS / OVERSEAS OUTDOOR STORAGE	A
OVERSEAS AIR MOVEMENT	B
OVERSEAS COVERED STORAGE	B
OVERSEAS SURFACE MOVEMENT	A
MOBILIZATION	A
STRATEGIC AND THEATRE DEPLOYMENT AND EMPLOYMENT	A

Attachment 4

WOOD PACKAGING MATERIAL (WPM) AUDIT INSPECTION CHECKLIST PHYTOSANITARY REQUIREMENTS FOR WPM COMPLIANCE

A4.1. Introduction. This is the minimal compliance inspection items that apply to all Air Force WPM fabrication and shipping activities. WPM Site Auditors shall use the checklist below to perform on-site audits and determine the level of compliance, assigning "Yes or No" to each checklist item. Please include brief comments explaining why each "no" response was assigned and any additional comments the inspector believes may be of value to the site custodian(s).

A4.2. Inspection Checklist.

A4.2.1. [NONCRITICAL] Does the base WPM site custodian(s) have access to the most current WPM policy and procedural guidance?

A4.2.2. [CRITICAL] Are the WPM certification stamps secured and only being used by personnel that have successfully completed the DOD web based training course?

A4.2.3. [CRITICAL] Does the organization(s) have procurement documentation for the last two years showing that all lumber (in board feet) procured by the organization(s) that was certified heat-treated lumber?

A4.2.4. [CRITICAL] Does the organization have work orders or other documentation for the last two years showing the amount of board feet used?

A4.2.5. [CRITICAL] During the last 12 months, is the amount (in board feet) of certified heat- treated wood used equal to or less than the amount (in board feet) of procured certified heat-treated wood?

A4.2.6. [CRITICAL] Does the organization(s) have training certificates on all personnel that are marking packaging with the IPPC/DOD certification markings?

A4.2.7. [CRITICAL] Does each shipment inspected, certified, and marked with the DOD "Pest Free" stamp have the following documented:

A4.2.7.1. National Stock Number (NSN)

A4.2.7.2. Quantity (QTY) of WPM by type

A4.2.7.3. Transportation Control Number (TCN) or Requisition Number

A4.2.7.4. Tested Moisture Percentage (if required)

A4.2.7.5. A statement that the wood did not contain any bore or grub holes larger than 3mm, no presence of visible bark and no other sign of pest infestation?

Attachment 5

PROCEDURES FOR COMPLETING AF FORM 451, REQUEST FOR PACKAGING SERVICE

A5.1. Instructions for Completing AF Form 451. All entries on AF Form 451 (Figure A5.1. below) may be handwritten. The guidance that follows corresponds to the blocks shown on the AF Form 451.

A5.1.1. Date. Enter the date that you initiate the form.

A5.1.2. Priority. Enter the supply priority and required delivery date assigned to the shipping document. If the request is not for a shipment, enter the date that you need the service.

A5.1.3. Request No. Use this block (packaging activities) for document control purposes. The number of copies required of AF Form 451 will depend on local requirements. A minimum of five copies is recommended. Three copies are provided to the Packaging and Preservation section. The original should remain with the item until packaging is completed. Another copy should be used for document control purposes. Document control request numbers should be assigned as requests are received. Recommend numbers be assigned in ascending sequence for 1 year, starting at the beginning of each calendar year. Document control copies are not required if a request control log is maintained. Request control logs, as a minimum, should reflect information from blocks 1, 3, 5, 9, 10, and the date completed from block 16. If a log is maintained, original copies should be filed, in request number sequence, after the packaging service is completed. If a copy is maintained for document control purposes, it may be replaced with the original after the packaging service is completed. Analysis of completed requests will provide management information to evaluate reusable container program deficiencies and trends, and to provide a basis for corrective action.

A5.1.4. To. Enter the organization symbol or name of the packaging activity.

A5.1.5. From. Enter the organization symbol or name of the activity initiating the request. If the form is prepared during the supply turn-in process, enter the symbol or name of the activity turning-in the item. Do not enter the symbol or name of the supply activity unless the item is being shipped (or packaged for storage) from supply stock. Enter the name of the person to contact for information on the request.

A5.1.6. Shipping Document No. Enter the Transportation Control Number (TCN) from accompanying documents. If none is available, enter not applicable (N/A).

A5.1.7. Issue Document No. Enter the supply document number from accompanying document. If none is available, enter N/A.

A5.1.8. Reason for Request. Check the applicable block, as follows:

A5.1.8.1. Container Destroyed by User. Check this block when reusable container has been disposed of by the user according to local procedures, and a replacement is not available from reusable container program resources. If the required SPI container is the long-life variety, attach a copy of the document used to turn the unserviceable container in to supply. This block may be checked for containers needed to replace containers,

which have deteriorated in storage. Annotate the MIPR/MORD Number in the remarks section.

A5.1.8.2. Item Issued Without Proper Container. Check this block when turning in an unserviceable reparable, and the correct SPI container was not issued with the serviceable replacement item. If the serviceable item was received in another service's pack, a contractor's reusable pack, or a pack marked with a prime AFGLSC deviation number in the lower right corner of the container, it may be used for shipment or storage. Annotate the MIPR/MORD Number in the remarks section.

A5.1.8.3. Item Due-Out Replacement Not Received. Check this block for Credit Due-In from Maintenance turn-ins when the SPI pack is not available through supply or reusable container program resources. If this block is checked, write "turn-in" in block 16.

A5.1.8.4. Initial Requirement. Check this block when items are turned in, containers are not available, and replacement items are received in a different SPI pack or no replacement item is required.

A5.1.8.5. Other. Check this block and specify the reason for the request when the circumstance is not covered in the blocks above. Examples: proper SPI container cannot be located for shipment of an asset, containers not available through supply, one-time-only, blocking and bracing, pallet repair, handling devices, etc.

A5.1.9. Item Requested. Check the applicable block to indicate the type of container required. Note that TPO Pack has been changed to SPI Pack.

A5.1.10. Specifications. Enter the applicable information in the blocks below. When additional information is needed to describe the service requested, attach the information in sufficient detail to the original copy of the AF Form 451 and write "details attached" in the remarks block.

A5.1.10.1. Quantity. Enter the number of units required.

A5.1.10.2. Unit. Enter each, pieces, bags, or any other descriptive unit of issue.

A5.1.10.3. Spec/SPI No. Enter the specification number or SPI number. If the SPI number is not known, enter the item NSN. The packaging activity will determine the SPI number required for the item, and enter the number. If the service required is not covered by a specification or SPI, enter N/A.

A5.1.10.4. NSN. Enter part number when an NSN is not available. This block may be blank if an SPI number is entered above.

A5.1.10.5. Nomenclature. Enter the name of the item or service requested if none of the blocks in item 9 is checked

A5.1.10.6. Length, Width, and Depth. Enter the measurements of the item requested.

A5.1.11. Purpose. Check the applicable block to indicate the item destinations. These blocks do not need to be checked when a complete shipping document is provided.

A5.1.12. Bldg. No. Enter the building number of the requesting activity if the container or item is to be delivered upon completion.

A5.1.13. Phone No. Enter the phone number of the person to contact for information on the request, or if pick-up delivery is indicated.

A5.1.14. Signature of Requester. Have the persons authorized to initiate AF Forms 451, as designated in this AFI and local supplemental implementing regulations, sign this block.

A5.1.15. Costs. Complete these blocks when required.

A5.1.16. Remarks. Enter the date the service is completed, required completion date, MIPR/MORD Number and other needed information.

Figure A5.1. AF Form 451, Request for Packaging Service.

REQUEST FOR PACKAGING SERVICE	DATE	PRIORITY	REQUEST NO.
TO:	FROM:		
SHIPPING DOCUMENT NO.	ISSUE DOCUMENT NO.		

Request the following packaging materials be procured. I understand special boxes are not to be requested when standard boxes can be used. I have tried to secure reusable containers as prescribed in AFI24-202.

REASON FOR REQUEST	ITEM REQUESTED	
☐ CONTAINER DESTROYED BY USER.	☐ TPO PACK	☐ CRATE*(s)*
☐ ITEM ISSUED WITHOUT PROPER CONTAINER.	☐ BOX*(es)*	☐ SKID*(s)*
☐ ITEM DUE OUT-REPLACEMENT NOT RECEIVED.	**SPECIFICATIONS**	
☐ INITIAL REQUIREMENT	QUANTITY / UNIT	SPEC/TPO NO.
☐ OTHER *(Specify)*	NSN	NOMENCLATURE
PURPOSE		
☐ DOMESTIC		
☐ EXPORT SHIPMENTS	LENGTH / WIDTH	DEPTH
☐ STORAGE		
BLDG NO. / PHONE NO.	SIGNATURE OF REQUESTER	

FOR USE BY PACKAGING PERSONNEL

COSTS		REMARKS
MANPOWER	$	
MATERIAL	$	
TOTAL	$	

AF IMT 451, 20040201 *(IMT-V2)*

Attachment 6

OUTBOUND TRANSPORTATION PROTECTIVE SERVICE MATERIEL CHECKLIST

*DELETED

Attachment 7

INBOUND TRANSPORTATION PROTECTIVE SERVICE MATERIEL CHECKLIST

*DELETED

Attachment 8

SAMPLE TO APPOINTMENT SPECIAL ORDERS

Figure X0X-X
Services Letter Head

SPECIAL ORDER Date

XX-XXX

Appointment of Transportation Officer

In accordance with the Defense Transportation Regulation, 4500.9, parts I, II and IV, I hereby appoint (Name/Rank)_____ as a fully trained and equipped Transportation Officer (TO) of this installation to execute Department of Defense (DOD) traffic management policy and procedures to obtain transportation services.

The appointment of this individual confirms he/she can provide efficient, responsive, and quality transportation services within the assigned area of responsibility (AOR) and ensure compliance with governing laws, directives, systems or programs, and regulations for cargo, passenger, personal property, and unit moves.

This individual has proven to be capable of providing technical direction, management, and evaluation of the traffic management and unit movement aspects of the DOD transportation movement program on a worldwide basis, subject to the overall guidance, policies, and programs established by USTRANSCOM, the Code of Federal Regulations (CFR), Joint Federal Travel Regulation/Joint Travel Regulation and DOD Components.

Effective this day XX XXX XXXX.

This memo supersedes all other previous correspondence, same subject.

FOR THE COMMANDER

EXAMPLE