BY ORDER OF THE COMMANDER
AIR FORCE MATERIEL COMMAND

AFMC INSTRUCTION 23-109

29 MARCH 2005

Operations

APPLICATIONS, PROGRAMS AND INDENTURES

COMPLIANCE WITH THIS PUBLICATION IS MANDATORY

NOTICE: This publication is available digitally on the AFDPO WWW site at: **http://www.e-publishing.af.mil.**

OPR: HQ AFMC/LGYR (Ms. Heather L. Hill)

Certified by: HQ AFMC/LGY
Pages: 100
Distribution: F

This manual prescribes guidance and procedural instructions for Applications, Programs and Indentures.

Chapter 1— INTRODUCTION **6**

1.1. Purpose. 6
1.2. Applicability. 6
1.3. Terms and Abbreviations. 6
1.4. Responsibility. 6
1.5. Policy. 9
1.6. Process. 10
1.7. Function. 11
1.8. The RMS Administrative and Support subsystem (D200.1). 11
1.9. Security. 12
1.10. System Control. 12
1.11. Interfaces. 13
1.12. Training. 13

Chapter 2— INDENTURES **14**

2.1. Record Establishment. 14
2.2. Data Sources. 14
2.3. Contractor data. 14
2.4. Provisioning. 14

2.5. Manual method. 15
2.6. Other Sources. 15
2.7. Equipment specialist indenture tasks and responsibilities. 15
2.8. Format. 15
2.9. Exemption Code. 16
2.10. Special Identification Codes (SID). 16
2.11. Acquisition Process Responsibilities. 17
2.12. Provisioning Interface. 18
2.13. Indenture Data Sustainment. 18
2.14. Notifications. 18
2.15. Design Changes. 19
2.16. Cataloging Actions. 19
2.17. System Interfaces. 19
2.18. Component Replacement Usage. 19
2.19. Technical Order (TO) Actions. 19
2.20. Source, Maintenance, Recoverability (SMR) Code. 19
2.21. Repair Programs. 19

Chapter 3— PROGRAMS **21**

3.1. Concepts. 21
3.2. Program Displays. 21
3.3. Program Categories. 21
3.4. Program Types. 22
3.5. Data Sources. 23
3.6. Projected Program Data. 23
3.7. Processing the PA File. 23
3.8. Past Program Data. 24
3.9. ALC and Contractor Developed Programs. 25
3.10. Program Maintenance. 25
3.11. Command Codes. 25
3.12. Program Reports. 26
3.13. Trend Analysis. 26

Table 3.1. Program Authorization File Format. 28

Table 3.2. Program Types. 30

Chapter 4— APPLICATIONS **31**

4.1. Description. 31

4.2. D200F SPD Table. 31

4.3. Equipment Specialist Application Responsibilities. 32

4.4. Program Selection. 32

4.5. Indentures and Linkage Data. 32

4.6. Application Percent. 33

4.7. Replacement Percent. 34

4.8. Program Distribution. 34

Figure 4.1. Distribution of Operational Program. 35

4.9. Programs Tailored to Modification Schedules. 36

Table 4.1. Modification SPD Format. 36

Figure 4.2. Modification Processing. 37

4.10. Mission Item Essentiality Code (MIEC). 37

Figure 4.3. Mission Item Essentiality Code Derivation. 40

4.11. Program Application. 40

4.12. Application Guidelines. 42

Table 4.2. Application Input Format 43

Table 4.3. MIEC Priority. 44

Chapter 5— DEVELOPMENT OF DATA FOR D200A PROCESSING **46**

5.1. General. 46

5.2. MDS Future Program. 46

5.3. MDS War Program. 47

5.4. Aircraft Availability Model (AAM). 47

Chapter 6— OUTPUTS **49**

6.1. Scope. 49

6.2. CA Dispatch. 49

6.3. Management Products. 49

6.4. User Requested Products. 56

6.5. Batch Jobs. 60

Chapter 7— CONTRACTOR SUBMISSION **61**

7.1. Background. 61
7.2. Data Submission. 61
7.3. Acquisition Process Responsibilities. 61
7.4. Data Review Responsibilities. 61
7.5. Procuring Activity Responsibilities. 62
7.6. Contractor Material Management Support. 62
7.7. Initial Indentures. 62
7.8. Request For Proposal (RFP). 62
7.9. Contractor Indenture Submittal. 62
7.10. Initial Indenture Preparation Instructions. 62
7.11. Next Higher Assembly (NHA). 63
Table 7.1. NHA Record Format, Indenture Record. 63
Table 7.2. Component Record Format, Indenture Record. 64
7.12. Repair History Reporting. 66
7.13. Reporting Schedule. 66
7.14. Production and Consumption. 66
7.15. Repair History Preparation Instructions. 66
7.16. Next Higher Assembly (NHA) Content. 66
7.17. Component Item (CI) Content. 66
Table 7.3. NHA Record Format, Repair Record. 67
Table 7.4. Component Record Format, Repair Record. 68

Chapter 8— SYSTEM INTERFACES **70**

8.1. Input Interfaces. 70
8.2. Output Interfaces. 77

Chapter 9— ON-LINE SYSTEM **85**

9.1. General. 85
9.2. Capabilities. 85
9.3. User Profiles. 85
9.4. Navigation. 86
Table 9.1. On Line Screen Selection. 87

Table 9.2. Indentures Quality Review Checklist (Page 1). 89

Table 9.3. Indentures Quality Review Checklist (Page 2). 92

Attachment 1— GLOSSARY OF REFERENCES AND SUPPORTING INFORMATION 93

Chapter 1

INTRODUCTION

1.1. Purpose.

1.1.1. This instruction outlines Air Force and Department of Defense (DoD) policy for maintaining data that relate Air Force aircraft and equipment to lower indentured assemblies, subassemblies, and components. It also establishes policy for maintaining past and projected operational, inventory, and maintenance programs for Air Force weapon systems and equipment. DOD 4140.1-R, Chapter 3, *DOD Supply Chain Materiel Management Regulation* paragraph 3B3h directs each military service to use item indenture and application structures to support calculation of secondary item requirements.

1.1.2. The D200F Applications, Programs, and Indentures (API) system is a subsystem of the Air Force Requirements Management System (RMS) and is the approved Air Force tool for maintaining hardware indentures and relating program data to secondary items. The purpose of D200F is to support the D200A Secondary Item Requirements System (SIRS) processes by insuring operational and maintenance program assigned to end items and assemblies is distributed to lower level components and subassemblies. The system does this by maintaining complete indenture structures for all end items, including aerospace vehicles, equipment, engines, and ground vehicles.

1.1.3. While D200F was specifically designed to support D200A SIRS, the indenture portion supports other processes throughout the Department of Defense (DoD). These include the Defense Logistics Agency (DLA) Weapon System Support Program, the Air Force Diminishing Manufacturing Sources and Material Shortage (DMSMS) program, and Air Force depot maintenance activities.

1.2. Applicability. This instruction applies to all Air Force Materiel Command (AFMC) personnel who maintain indentures and program data that support AFMC requirements determination processes.

1.3. Terms and Abbreviations. **Attachment 1**, Glossary of References and Supporting Information, includes is a list of terms used in this instruction and their definitions, and a lists abbreviations/acronyms and their meaning.

1.4. Responsibility.

1.4.1. HQ AFMC/LGY will implement the policies and procedures established in this instruction.

1.4.2. The HQ AFMC Office of Primary Responsibility (OPR) will:

1.4.2.1. Advise senior AFMC management, HQ USAF, other services and Department of Defense (DOD) agencies of developments in D200F that affect support of AFMC customers throughout the DOD and the Air Force mission.

1.4.2.2. Provide guidance to ALC OPRs on matters relating to management of indenture and program data.

1.4.2.3. Generate Process Change Requests (PCRs) and Computer System Requirements Documents (CSRDs) to implement system changes and enhancements.

1.4.2.4. Submit deficiency reports to correct processing and system problems.

1.4.2.5. Develop and support process and system improvements.

1.4.3. Air Logistics Centers Directors of Logistics (ALC/LG) will:

1.4.3.1. Appoint personnel to act as Offices of Primary Responsibility (OPR) for indentures and programs.

1.4.3.2. Provide written requests for permission from the HQ AFMC API OPR to approve waiver(s) for deviating from the HQ AFMC/LGYR API Instruction.

1.4.3.3. ALC LG will ensure that ALC/LG Applications, Programs and Indenture (API) OPRs are assigned and that ALC D200F Program Monitors are assigned.

1.4.4. ALC LG Applications, Programs and Indentures OPRs will develop/enforce policy for ALC/LG personnel and have the responsibility for adding, changing or deleting local system program designators and the redesignation of local system program designators in a subparagraph.

1.4.4.1. Act as the single point of contact for all indenture information pertinent to the D200F system and disseminate indenture information or correspondence to the ES organizations at their ALCs.

1.4.4.1.1. Oversee the input of data files containing indenture data, and of production and consumption history from the maintenance function, contractors and interfacing systems. [**NOTE:** OO-ALC may choose to assign this responsibility to the ALC/IT API OPR].

1.4.4.1.2. Provide guidance to equipment specialists (ES) and other personnel who maintain indenture structures and associated data, and to ALC managers who generate maintenance programs.

1.4.4.2. Ensure that ESs are maintaining the indenture structure and making corrections to all inaccurate indenture structures in the D200F system. In order to monitor progress of the indenture clean up effort and indenture maintenance, the ALC Indentures OPR will report once every quarter to the HQ AFMC/LGYR API OPR on all indenture file maintenance progress and outstanding issues in the D200F system.

1.4.4.3. Ensure that **all** ESs at their respective Center have attended and completed the Application and Indentures Training Course. See your local training monitor/office for details on class times and locations.

1.4.4.4. Ensure that **all** Inventory Management Specialists (IMS) who manage recoverable or AF managed consumable items have attended the Application and Indentures Training Course. IMS must be trained to use D200F to review and to identify excess higher-level assemblies that can be used to satisfy lower-level component buy and repair requirements.

1.4.4.5. Advise single managers on the effects that changes in indenture or program data may have on their systems.

1.4.4.6. Keep senior ALC management informed of developments in API indenture processes.

1.4.4.7. Refer processing or policy questions to HQ AFMC/LGY and generate deficiency reports (DRs) after encountering processing or system problems that cannot be resolved locally.

1.4.4.8. Supplement this instruction when necessary to deal with unique situations at their ALCs

1.4.5. ALC Program Monitors will:

1.4.5.1. Establish and modify locally established non-fly programs in D200F, and update the Past Actual Program and Peacetime Projected Program screens.

1.4.5.2. Monitor all program-related matters for requirements determination purposes.

1.4.5.3. Keep ALC senior management informed of developments in API program processes.

1.4.5.4. Refer processing or policy questions to HQ AFMC/LGY and generate deficiency reports (DRs) after encountering processing or system problems that cannot be resolved locally.

1.4.5.5. Supplement this instruction when necessary to deal with unique situations at their ALCs

1.4.6. Equipment specialists will:

1.4.6.1. Insure that the D200F database reflects accurate indenture structures and related data for all systems, equipment, and assemblies for which they are responsible.

1.4.6.2. Insure that changes to indenture structures that result from modifications, reliability changes, or changes to the maintenance concept are reflected in the D200F database.

1.4.6.3. Perform the following program selection tasks (see **Chapter 4**):

1.4.6.3.1. Identify secondary components resident in the D200A Secondary Item Requirements System (SIRS) to the higher assembly applications, and determine the proper program activity to apply from the application to the components.

1.4.6.3.2. Determine the amount of program that should apply to a component at any given point in the future, using the time-phasing technique described in **Chapter 4**.

1.4.6.3.3. Coordinate with ESs within and outside of their organizations on matters that affect indenture relationships of their assigned systems.

1.4.6.3.4. Ensure each application, program select code, application mission essentiality code, program begin date, quantity per assembly, application percent are accurately file maintained and in the correct format.

1.4.6.4. ESs must continually maintain the indenture structure of assigned items and application data and make corrections to all inaccurate indenture structures and application data in the D200F system.

1.4.6.5. ESs are required to correct all inaccurate D200F indenture data and application data and maintain the updates to the D200F indenture structure and application data on their assigned items.

1.4.6.6. ESs must attend and complete the Application and Indentures Training Course. See your local training monitor/office for details on class times and locations.

1.4.6.7. The ES should refer to the Indentures Quality Review Checklist in **Table 9.2.** as a guideline for reviewing Indentures.

1.4.7. End article item managers (EAIMs) (D200C IMS) will:

1.4.7.1. Ensure that their items reflect timely in-use inventory in the D200C Equipment Process subsystem before each semi-annual update. EAIMs (D200C IMS) must ensure the data in the source systems (D200C and D075) are timely maintained so the data will successfully pass to

D200F. If the D200C and D075 systems data does not support what is file maintained in D200F, then the D200F data will be erroneous.

1.4.7.2. The EAIMs responsibility is to review, analyze, and correct the requirements data in D200C and D075 in a timely manner, thus ensuring the data passed to D200F is complete and accurate.

1.4.8. Inventory management specialists (IMSs) who manage recoverable or Air Force managed consumable secondary components will refer questions regarding inventory programs generated in the 1.4.9 D200C systems to the applicable EAIM.

1.4.8.1. IMS must attend and complete the Application and Indentures Training Course. See your local training monitor/office for details on class times and locations.

1.4.8.2. IMS must use D200F indenture data to identify higher-level assemblies that could be used to satisfy buy and repair requirements of lower-level components. IMS must document that they have reviewed the D200F indenture data and retain this documentation with the item file for audit purposes.

1.4.9. Production Management Specialists (PMS). The Seller PMS is responsible for supporting contract repair with Government Furnished Materiel (GFM). D200F produces a Purchase Request Support List (PRSL) to identify GFM candidates. See API Users Manual instructions on generating a PRSL. The users manual is available on line through a link at **https://www.msg.wpafb.af.mil/sxr/**.

1.4.10. The HQ AFMC Reclamation OPR and the ALC Reclamation Program Control Officer. CSRD 02-0212 changed the way the Reclamation process works. API no longer provides an on-line screen for the Reclamation officers to enter items to be reclaimed. Instead API now receives an interface from D035G that gives us the requests to process. Consequently, we have removed that screen from API. See **Chapter 5** for product descriptions.

1.4.11. System Program Directors will insure that equipment specialists review and maintain accurate indenture structures and relationships and application data for vehicles and equipment they manage.

1.5. Policy.

1.5.1. The API process directly supports the requirements determination process for secondary items and maintenance production. Therefore, accurate indenture data and application data are necessary to distribute program data to the component level and assure calculation of accurate maintenance and failure rates and requirements. Indentures should reflect the illustrated parts breakdowns in the –4 series of technical orders.

1.5.2. The D200F Applications, Programs, and Indentures (API) subsystem is the approved tool for managing application indentures and program data. D200F serves as a database for component and end item indenture relationships and for weapon system level program data.

1.5.3. ESs shall periodically review indenture relationships of components, assemblies, equipment, and end items for which they are responsible. An assembly or end item may have lower indentured assemblies that are assigned to another ES. Therefore, it will occasionally be necessary to consult with other ES to verify the indentures.

1.5.4. Indenture review involves ES verification that each assigned assembly's components on the next lower indenture are properly identified and that each component's quantity per assembly (see

Chapter 2), application percent, mission item essentiality code (MIEC – see **Chapter 4**), and the source, maintenance, recoverability (SMR – see **Chapter 4**) code are accurate. The ES enters a review date in YYYYDDD format after review. The review date causes the D200F system to count the assembly as reviewed for reporting purposes. Review dates expire after 18 months. Assemblies with expired review date need to be revalidated.

1.5.5. The ES will review the NHA data (navigation: FOE FM AI NHA.) screen in API at least once each 18 months. The ES reviews the indenture and either accepts the change by adding a date in the "INDENTURE REVIEWED DATE" (yyyy/ddd) field or adds the correct indenture information. If the ES determines that the indenture data is incorrect, the ES must take action to correct the indentures data in API.

1.5.6. The illustrated parts breakdowns in the –4 technical order series are the authoritative sources for indenture information. Consider automated means of review using scanner technology with hard copies of the tech orders, or automated methods for tech orders that are available in electronic format. The HQ AFMC and ALC indenture OPRs have a PC-based software package that formats indenture information derived from technical orders and prepares the data for input to the D200F database.

1.5.7. Only the HQ AFMC API OPR can change operational program data that are derived from the USAF Program Aerospace Vehicle and Flying Hours (PA) documents, and HQ USAF/XOO must have specifically authorized these changes. ALC managers may create and change overhaul programs that generate at their ALCs.

1.6. Process.

1.6.1. D200F Overview. The D200F API is part of the relational, interactive D200 Requirements Management System (RMS) database maintained at Wright-Patterson AFB OH. To support RMS materiel and budget requirements, D200F performs several computations, including engine programs, tailored modification programs, and application percents. For detailed descriptions of each system process see the D200F Process Functional Description. The link to the PFD is at URL **https://www.msg.wpafb.af.mil/sxr/.**

1.6.2. D200F provides information to assist users in functions related to Integrated Weapon System Management (IWSM). It produces output products for management of configured items and weapon systems. This includes identification of higher and lower assemblies, quantity per application (QPA) and application percent.

1.6.3. D200F includes the following categories of data: applications, programs and indentures.

1.6.4. The indenture portion identifies relationships of components to their higher assemblies and end items.

1.6.5. The indenture portion is a conceptual tree that breaks an end item down to its components one level of indenture at a time. The system builds end item indentures top down by relating each assembly to its components on the next lower indenture level.

1.6.6. Each indenture relationship involves a single NHA and a single component. Any given NHA can have more than one direct component, but will have a separate indenture relationship with each component.

1.6.7. Each set of NHA-component relationship records appears only once in D200F no matter how many assemblies or end items are involved. When a user requests a product that displays all levels of

indenture of an assembly or end item, D200F builds that NHA's entire indenture structure according to the relationship data in the system at each indenture level.

1.6.8. The application portion relates aerospace vehicles, equipment, engines, and other end items to operational, inventory, and maintenance program data. This portion also defines the relationship of end items to their component items with the following time-phased data that may actually override the data derived from the physical (indenture) relationships indenture data: quantity per application (QPAPPL), quantity per assembly (QPA), replacement percent (REPL%) and application percent (APPL%). The application portion allows relationships to be established between items and various end items (frequently weapon systems) for which program will be computed for SIRS. If it is necessary to override the QPAPPL, REPL %, and APPL% that would be derived from the physical relationships, they are overridden via time-phased entries in the application portion of API.

1.6.9. The program portion identifies provides past and projected program data and computes programs for engines and for modification programs.

1.6.10. D200F is integrated with the D200E Requirements Item Identification (RIID) function in the RMS system. RIID provides cataloging data and stock list changes received from the D043 Master Item Identification Control System (MIICS). RIID receives initial indenture and catalog data from the D220 Air Force Provisioning System and updates from the D043A Master Item Identification Control System, and edits all cataloging data for stock listed items. RIID also accepts non-stock listed items from D220 and posts them in the D200 database.

1.7. Function.

1.7.1. Users can view and update D200F data through the RMS on-line system. This system features menu-driven navigation in each of the following functions:

1.7.1.1. The display function, which allows most users to view application, indenture and program data.

1.7.1.2. The file maintenance function, which allows authorized users to update data that fall into their areas of responsibility.

1.7.1.3. The output products function, which allows users to submit product and report requests and to review the status of requests already submitted (see the description of CA DISPATCH below, **paragraph 1.8.3.**).

1.7.2. Throughout this instruction are references to navigation paths that refer to certain system screens or their processes or products. **Table 9.1.** in **Chapter 9** displays the screens associated with these paths.

1.7.3. For example, path FOE DIS PRGM SPDL points to the Standard Program.

1.7.4. Designator (SPDL) screen, in the program path (PRGM), under the Display function (DIS). All D200F screens are reached through the Final Operating Environment (FOE) high-level option.

1.8. The RMS Administrative and Support subsystem (D200.1).

1.8.1. Provides a notification function that advises ESs of changes or additions to the database that affect their workload. This includes any catalog changes, file maintenance errors, inputs from the interfacing systems that affect indenture structures, errors in input data from these systems, and user

requested reports that have not processed in CA Dispatch for viewing. Users should establish a regular routine of reading notifications. Errors should be promptly corrected to prevent transactions from accumulating in suspense files. Notification messages are deleted after three days.

1.8.2. The query function uses a commercial software package, ADR DATAQUERY, which allows the user to select, retrieve, and order data from the RMS databases. D200F produces "push" and "pull" products. The system automatically creates push products on a regular basis e.g., weekly, monthly etc., and creates interface products as they process. The system creates pull products only when users specifically request them. Pull products are processed on request only during the cycle in which the request is received at the processing center. **Chapter 5** describes each output product. The API User's Manual has a sample of each product.

1.8.3. CA DISPATCH is a commercial software package that processes and generates reports for all RMS subsystems. The D200F system was designed to be a paperless data system. Although printed products are available, CA DISPATCH initially processes both system generated ("push") and user requested ("pull") products for on-line viewing. If printed copies are desired the user must execute a print command. CA DISPATCH retains system-generated reports for three calendar days. The system assigns a job number to each report using the user's next number sequence. Users may interrogate CA DISPATCH for availability of reports that they and other users have generated. See **Chapter 5** for instructions on viewing system generated reports. The API push/pull products print according to how the ES has the printer set up under their D200 ID. If it's set up for a particular printer, then the product will automatically print at that printer instead of CA DISPATCH. If it's set up for DISP, then it will go to CA DISPATCH for on-line viewing. The printer setting can be viewed/changed by going to the following screen in API: MAIN, UDV, FM, UVFK.

1.9. Security.

1.9.1. D200F is an unclassified database. Classified data are not authorized.

1.9.2. System Use. The RMS uses internal edits for system access, control and data processing.

1.9.3. System Access. All D200F users must have an approved RMS user identification and password. The Defense Information Systems Agency (DISA) controls access to all DoD data systems. ALC users request system access by submitting DD Form 2875 System Authorization Access Request (SAAR) to the ALC OPR. All other requesters, including contractors, submit DD Form 2875 which can be found at the following website: **https://www.ripit.wpafb.af.mil/LGIR/documents/DD2875.pdf** , to the HQ AFMC API OPR at HQ AFMC/LGYR, 4375 Chidlaw Road, Room N145, Wright-Patterson AFB OH 45433-5006. All requests must be reviewed by the user's security manager and approved by the first line supervisor and the appropriate OPR before forwarding to DISA. Contract task managers may approve requests for contractor personnel in lieu of the supervisor.

1.9.4. In compliance with DoD standards, RMS suspends the password of any user who has not signed on to the system within the previous 90 days.

1.9.5. Suspended users must request a new password from the RMS data administrator. If a user does not log on to the system for 180 days the system revokes the user identification and the user must resubmit the DD Form 2875.

1.10. System Control.

1.10.1. Users can gain access to indenture data in D200F by entering a combination of a vendor's part number and a Commercial and Government Entity Code (CAGE, formerly FSCM) code, a Standard Reporting Designator (SRD), or a National Item Identification Number (NIIN). These are the primary controls the system uses to identify parts to their NHA and component item relationships. Users can gain access to program data by entering the Standard Program Designator in the proper format (see **Chapter 4**, **Table 4.2.**)

1.11. Interfaces.

1.11.1. The D200F system receives data primarily through interfaces from other systems and through user file maintenance. **Chapter 5** describes the system output products. **Chapter 6** describes the input and output interfaces.

1.11.2. System Users and Profiles. Each of the following D200F users is assigned separate profiles. Each profile allows a distinct "read" and "write" capability that enables the user to view and update records. See **Chapter 8** for access and responsibilities:

1.11.2.1. Equipment Specialists (ES).

1.11.2.2. ALC Indenture Monitors.

1.11.2.3. HQ AFMC API OPR (also the HQ AFMC Policy OPR).

1.11.2.4. ALC Programs Monitor.

1.11.2.5. System Program Manager (SPM) or System Program Director (SPD).

1.11.2.6. Production Management Specialist (PMS).

1.11.2.7. HQ AFMC Reclamation OPR.

1.11.2.8. ALC Reclamation Program Control Officer (RPCO).

1.11.2.9. All RMS (API) Users can view and request general information related to API.

1.12. Training.

1.12.1. ESs, PMSs, ALC Indentures OPRs and IMS managing recoverable and AF managed consumable items should complete Course MHPCIM0003500SU. This course is available through each ALC training function.

Chapter 2

INDENTURES

2.1. Record Establishment.

2.1.1. Indenture records are established in D200F through automated interface with other systems, and through manual input. Generally, equipment specialists (ES), ALC OPRs, and HQ AFMC analysts may update indenture records. Only the responsible ES may add, change, or delete data specific to a particular component or assembly.

2.2. Data Sources.

2.2.1. Data from several sources establish and change indenture records. The choice depends on availability of data and which source, in the ES's judgment, provides the best information. However, the first two sources described below are preferred: contractor data and provisioning.

2.3. Contractor data.

2.3.1. The Air Force acquires indenture records from manufacturers of new end items and aircraft using DOD Data List Data Item Description (DID) DI-ILSS-81220A and DI-ILSS-81221A, Applications, Programs and Indenture Data. Chapter 7 has the DIDs formats and procedures for establishing records from data submitted by contractors.

2.3.2. The decision to buy records is part of the acquisition process. These data should be an integral part of any solicitation and procurement package (see **Chapter 7**). The records are complete indenture files in electronic form in the specified format. Some older systems did not include these data in their procurement packages; therefore, the Air Force should acquire or build these data, whichever is the most economical.

2.4. Provisioning.

2.4.1. This method creates indenture records through interface with the D220 Air Force Provisioning System during the provisioning process. D220 produces an indenture file that reflects the provisioning parts list. If the provisioning file does not include a particular assembly's indenture, the ES should manually add it and its components after the cataloging screening process.

2.4.2. Interim supply support (ISS) is a program in which a contractor performs materiel management functions, including provisioning tasks, during the period when a new system or end item is being fielded and demand patterns stabilize. When a contractor performs materiel management functions under ISS arrangements, HQ AFMC API OPR strongly recommends considering acquiring data through the DIDs, since the traditional provisioning may not be used and no D220 file may be available. ISS is performed under the oversight of a supply support integrated product team (SSIPT). Each SSIPT includes ESs as core members, and they provide the same level of assistance and expertise as they would on a traditional provisioning team.

2.4.3. Regardless of how a new system will be supported (ISS or traditional provisioning), the ES on the SSIPT or the organic provisioning team must notify ESs who are responsible for stock listed components that will be used in the new system or end item. This information allows the component ES to

include program data for the new systems on the component's program selection record (see **Chapter 4**).

2.5. Manual method.

2.5.1. The responsible ES can establish indenture records using the on-line system and referring to primary sources of indenture data. Sources of indenture data include drawings, Illustrated Parts Breakdowns in the –4 technical orders, technical manuals, and provisioning documents. Two screens are available in the file maintenance feature of the on line system to establish indentures.

2.5.2. The indenture screen (Navigation FOE FM AI IND) allows the ES to identify a NHA and add components one at a time.

2.5.3. The "Copy/Add" feature is a time saving tool that allows the ES to copy component indenture records from a similar older NHA to a newer NHA (Navigation FOE FM IND CAI). If 80% of the old NHA's components are also part of the new NHA, the Copy/Add feature can reduce the workload involved with establishing indentures for the new NHA by 80%.

2.5.4. The system does not allow indentures to be copied if the NHA has an exempt code. Also, the NHA being added must be assigned to the ES performing the copy/add action.

2.6. Other Sources.

2.6.1. Sometimes a component is replaced in a NHA during repair or overhaul of the NHA, and D200F does not have an indenture relationship between the two. In those cases D200F automatically establishes indenture records at the first level as the component's replacement (consumption) is reported against the NHA's repair or overhaul (production). D200F produces a product New Components for Existing NHA that advises the ES of this condition. The ES will review this product and will use it to build or change indenture records.

2.7. Equipment specialist indenture tasks and responsibilities.

2.7.1. The ES, as an integral part of the provisioning process, insures accuracy of indentures before passing them to D200F. All first level components, regardless of the Expendability, Recoverability, Repairability, Category (ERRC) code and prime ALC, shall be identified to a higher assembly. Incorrect or missing component-NHA relationships could cause inaccurate buy and repair projections. Inaccurate indenture reporting could cause the maintenance activity to order the wrong parts.

2.7.2. When building an indenture record include any special support equipment, bulk materials, and technical data references necessary to support maintenance of the item or weapon system, using the appropriate Special Identification Designator (SID) code.

2.7.3. Changes to indentures result from configuration changes -- Engineering Change Proposal, Design Change Notices, and major modifications -- should pass to D200F through the provisioning process. Therefore, once the indenture for a weapon system or item is entered correctly, only minimal intervention should be needed to maintain the indenture.

2.8. Format.

The ES will file maintain the indenture data in the proper format in accordance with system edits. See the API Users Manual for input instructions and edits. This document and all D200F related documentation is

available on the Internet at **https://www.msg.wpafb.af.mil/sxr/rdb.htm** and on the D200F webpage: **https://www.ripit.wpafb.af.mil/LGIR/D200F.asp**.

2.9. Exemption Code.

2.9.1. Sometimes a NHA may be exempt from having its components identified. In such cases, the exempt codes below apply. Manual input is the only source for these codes. The types of Exemption Codes are as follows:

2.9.1.1. A – No components needed for depot repair

2.9.1.2. B – Sole source contract repair that includes repair parts as well as labor

2.9.1.3. D – End item is exclusively repaired by another service, and no Air Force furnished components are involved

2.9.1.4. E – End item is modified during repair and a different NSN is assigned

2.9.1.5. J – Classified item; the ES assigns this code only when indenture establishment would compromise classified information

2.9.1.6. N - New NHA with production history but no consumption history

2.9.1.7. T – Technical data are not available. Do not use this code if the CAGE (formerly FSCM), SMR code, MIEC, QPA, and application percent are known

2.9.2. Be cautious when assigning exemption codes. They prevent the system from assigning component records to the NHA. If assigned to a NHA that is already indentured, the system deletes all component relationships. Also, the system neither computes component requirements nor accepts consumption history when an exempt code is present. Lower indentured assemblies of a NHA with an exemption code still retain their component-NHA relationships.

2.10. Special Identification Codes (SID).

2.10.1. This code identifies a special condition or additional information pertaining to a component in an indenture chain. In some cases the SID identifies components that are not part of an end item's hardware indenture or configuration, but are used under special circumstances. In others they indicate components that are part of an end item only under certain conditions. The ES enters this code on the indentures file maintenance screen in the on line system. The codes and their meanings are:

2.10.1.1. Code D, Special Tool Field and Depot, indicates that the component is a special tool needed for field and depot-level repair, but is peculiar to the particular end item and not normally available in a repair shop.

2.10.1.2. Code E, Special Tool Depot Only, indicates that the component is a special tool needed for depot-level repair, but is useful only with a particular end item and is not normally available in a repair shop.

2.10.1.3. Code F, Test Equipment Field and Depot Only, indicates that the component is an article of test equipment required for both field and depot repair, is peculiar to the particular end item, and not normally available in a repair shop.

2.10.1.4. Code G, Test Equipment Depot Only, indicates that the component is an article of test equipment required only for depot repair, is peculiar to the particular end item, and not normally available in a repair shop.

2.10.1.5. Code H, Variable Tolerance Item, indicates a component that is installed only when needed to meet certain specifications such as tolerance, size, thickness, etc. Examples are shims, gaskets, or bushing.

2.10.1.6. Code L, Bulk Material, indicates an article of bulk material (paint, adhesives, grease, etc.) needed to repair or overhaul the end item.

2.10.1.7. Code M, Shop Manufacture Item, indicates that the component is manufactured, but requires no machining and normally can be made in the shop with standard shop equipment. Examples are gaskets, lengths of wire, or shims.

2.10.1.8. Code N, Specific Series or Configuration Application Item, indicates that the component applies to a specific series or configuration of the end item. The end item mission design series (MDS) or the component's serial number determines the usage.

2.10.1.9. Code P, Serial Number Controlled Item, indicates that each piece of material bearing this identity is controlled by an assigned serial number.

2.10.1.10. Code R, Test Equipment Field Only, indicates that the component is an article of test equipment needed only at the field activities.

2.10.1.11. Code S, Repair/Parts Kit, indicates that the component is a repair parts kit.

2.10.1.12. Code T, Technical Order/Drawing, indicates that the component is a technical order or a drawing.

2.10.1.13. Code U, Selective Fit, indicates that the component requires selective fit or selection of one component from a number of choices.

2.10.1.14. Code V, Review, indicates that the component was input by the system and requires review and update by the ES. D200F adds this code to the record when a depot maintenance activity orders a component that is not part of the indenture of an assembly undergoing overhaul or repair. The indenture is updated to include the component in the assembly's indenture. The word "REVIEW" appears in the breakdown sequence number (BSN) field. The ES reviews the indenture and either accepts the change by adding a date in the "REVIEW DATE" field or adds the correct indenture information.

2.10.1.15. Code W, Embedded End Item Not Repaired Separately, indicates a recoverable component that will never be repaired separately; therefore, all of its components should be included in this indenture.

2.11. Acquisition Process Responsibilities.

2.11.1. AFMCI 23-104, *Functions and Responsibilities of the Equipment Specialist During Provisioning* directs the ES to ensure that each part of an end item is established in the indenture record. The following guidance defines the tasks involved with establishing indentures:

2.11.1.1. Request for Proposal (RFP).

2.11.1.1.1. During Request for Proposal (RFP) development the ES will request contracting actions that direct the contractor to deliver indenture data. As part of the Logistic Support Analysis (LSA) request package the ES will identify the indenture requirement using the DOD Data List Data Item Description (DID) DI-ILSS-81221A, which calls for LSA records as source data. This DID will be used on all acquisitions and modifications, including system acquisitions planned for contractor support under Initial Supply Support or Contractor Logistics Support arrangements.

2.11.1.2. Support Equipment Recommendation Data (SERD).

2.11.1.2.1. During the Support Equipment Recommendation Data (SERD) review the ES will consider the indenture requirements. When applicable, indicate on the SERD that a provisioning parts list (PPL) is required.

2.12. Provisioning Interface.

2.12.1. Automated interface with the D220 provisioning system establishes an indenture relationship when identified on a Provisioning Parts List (PPL).

2.12.2. The ES must review all indentures established during the acquisition process to insure their accuracy. The ES will correct any discrepancies through the on-line system. In addition, if the above procedures were not followed during acquisition, the ES shall manually build the indentures.

2.12.3. If D220 does not provide an APPL % or QPA for an indenture relationship, D200F assigns defaults of 0% and 0, a Special Identification Designator (SID) code of "W" (embedded end item) and a Breakdown Sequence Number (BSN) containing the word "REVIEW" to the indenture relationship. The ES should review the relationship and consult the provisioning data or the technical order for the correct QPA.

2.12.4. A replacement percent source reference code (SRC) indicates how the value of the replacement percent was acquired. The SRC codes used and their definitions are:

2.12.4.1. A – "Actual;" derived from a system interface.

2.12.4.2. C – "Computed;" derived from reporting from a maintenance activity.

2.12.4.3. E – "Estimated" or "entered;" derived through ES manual update.

2.12.4.4. F – Value was not entered when the indenture was established and the system assigns a default value of 0%.

2.13. Indenture Data Sustainment.

2.13.1. The ES maintains indenture data within D200F for the life of a weapon system or end item. The ES must keep abreast of changes that affect an item's or a system's indenture structures, and incorporates these changes into the D200F system. After finishing an indenture review process, the ES must file maintain a review date onto the NHA screen. Some processes that may change indentures include: notifications, design changes, cataloging actions, system interfaces, component replacement usage, T.O. actions, SMR Codes, repair programs.

2.14. Notifications.

2.14.1. The RMS on line system includes a notification feature that provides users with information relevant to their particular workloads. The ES should establish a routine of periodically checking the RMS Notifications function for any information requiring ES action on indentures or applications. Notifications remain in the system for three days before they are deleted.

2.15. Design Changes.

2.15.1. Change or add indentures to agree with the Time Compliance Technical Order (TCTO). This includes deleting or adding all parts that were deleted or added by the TCTO. Also review replacement percentages since TCTO changes often result in improved reliability.

2.16. Cataloging Actions.

2.16.1. Review all system-generated notices that result from cataloging changes and determine how they affect the indentures. Update the D200F system as required.

2.17. System Interfaces.

2.17.1. Review all system-generated notices and reports (see **Chapter 6**) that result from data system interfaces and determine how they affect indentures, production schedules, and consumption rates. Update the D200F system as required.

2.18. Component Replacement Usage.

2.18.1. Review replacement percentages when external events may affect component replacement rates, e.g., changes to repair authorizations or environmental conditions.

2.19. Technical Order (TO) Actions.

2.19.1. Change indenture data elements to reflect TO changes that affect indentures or indenture data. If indentures were built before the TOs were received, the indenture should be verified at the same time the TO is verified.

2.20. Source, Maintenance, Recoverability (SMR) Code.

2.20.1. Change indenture data elements to reflect SMR code changes. Changes in level of repair will likely affect the replacement percent.

2.21. Repair Programs.

2.21.1. The ES should review indenture data of assemblies and end items that are projected for repair in the most recent D200A requirements computation. Focus first on critical items, not mission capable supply (NMCS) items on backorder, and items that will support programmed depot maintenance (PDM) schedules. The review shall be completed before starting a new repair project or prototype (AFMC IMT 206, **Temporary Work Request**).

2.21.2. The following products aid in identifying need for review. See **Chapter 6** for a description of each product:

2.21.2.1. New NHAs and Related Components.

2.21.2.2. New Components for Existing NHAs.

2.21.2.3. Component Items for Review.

2.21.2.4. Selected Items for Review.

2.21.2.5. Incomplete Indenture Chains.

2.21.2.6. Indenture guidelines. Consider the following rules when creating or changing indentures:

2.21.2.6.1. Secondary items --those with ERRC T, C, N, or P -- cannot be end items. Every secondary item must have a NHA.

2.21.2.6.2. A component with ERRC C or T cannot be a component of a NHA with ERRC N or P.

2.21.2.6.3. Since the part number-CAGE combination is the primary record identifier in D200F, a part number-CAGE combination must be entered to establish a new indenture. If only a NIIN is entered the system returns a message, “Cannot add by NIIN.”

2.21.2.6.4. The indentures include non-stock listed components and NHAs; i.e., they are identified by part number/CAGE combination only. Only non-stock listed line replaceable units (LRUs) should have stock listed components. Generally, non-stock listed components of secondary items should not have stock listed components. ESs should review these types of indenture chains for validity.

2.21.2.6.5. A NHA can have production history with no corresponding component consumption history. However, all component consumption history must be accompanied by NHA production history. Recorded consumption history indicates the component was removed from some higher assembly.

2.21.2.6.6. Components that are insurance items (Acquisition Advice Code Z in the catalog system) should not have consumption history. If the maintenance system reports consumption against an insurance item the ES should review the NHA and the component and consider one of the following actions:

2.21.2.6.6.1. Delete the consumption history.

2.21.2.6.6.2. Change the component’s SMR code and Acquisition Advice Code.

2.21.2.6.6.3. NHAs that are insurance items should not have components with replacement percents greater than 0.

Chapter 3

PROGRAMS

3.1. Concepts.

3.1.1. A "Program" is any activity that creates the need for spare parts.

3.1.2. An "application" is any assembly in an indenture chain, including the end item, which generates measurable program activity. An assembly becomes an application when the ES determines that it requires spare part support as part of its normal maintenance. Applications are expressed as Standard Program Designators (SPD) in D200F (see **Chapter 4**).

3.2. Program Displays.

3.2.1. D200F receives historical program data and authorized future programs and displays them in quarterly increments in the on-line system.

3.2.2. When a user requests a Display, File maintenance, or Trend Analysis screen, the system automatically displays the program data that are current at the end of the most recent calendar quarter, which is represented as the "asset cut-off date" D200A uses for spare part requirements projections. The system displays a Programs Calendar Quarter, expressed in YYYY/MM format. The Programs Calendar Quarter begins on the day after the asset cut-off date, and therefore is the first quarter of program projection.

3.2.3. In the Display and File Maintenance functions users can view program projections from past quarters by entering a Programs Calendar Quarter in the above format that corresponds to any calendar quarter during the two years before the asset cut-off date. The month portion of the date must be 03, 06, 09, or 12.

3.2.4. In the Trend Analysis TAC function (see section **3.13.** Trend Analysis) users can compare current projected programs for 8 future quarters to what was projected for each of those quarters during the previous 8 cycles. The first of the 8 future quarters to be displayed can be specified by entering in the "Start Qtr" field a date that occurs during the ten years after the asset cut-off date. The month portion of the date must be 03, 06, 09, or 12. The Start-Qtr field must be equal to or greater than the Program-Cal-Qtr.

3.2.5. In the Trend Analysis TAP function (see section **3.13.** Trend Analysis) users can compare actual program activity during the two years before the asset cut-off date with what was projected in previous cycles. The month portion of the date must be 03, 06, 09, or 12.

3.3. Program Categories.

3.3.1. D200F recognizes three categories of programs; each is identified by one of several program types. D200F includes past and projected programs for each category. The three categories of programs are:

3.3.1.1. Organizational and Intermediate Maintenance (OIM) Programs, which indicate levels of activity at the operational user's (usually base) level.

3.3.1.2. Depot Level Maintenance (DLM) programs, which indicate levels of maintenance activity during end item overhaul or higher assembly depot level repair.

3.3.1.3. Inventory Programs, which indicate authorized active and inactive inventories for end items. At the item level an inventory program is a statement of the number of components that are installed in the end item population.

3.4. Program Types.

3.4.1. The Air Force uses nine types of program for most applications. D200F makes the following programs available to the D200A system, which uses them to compute secondary item replenishment requirements (see also **Table 3.2.**). D200F computes program data for engines for the program type corresponding to the first position of the Program Select Code as defined in the aircraft to engine application relationship. D200F also computes program data for PECs for the program types corresponding to a non-zero first and second position of the Program Selection Code as defined in the aircraft to PEC application relationship. The program types are as follows:

3.4.1.1. Type 1, Operating Hours. Also known as flying hours, is the number of hours an application has flown or is authorized to fly in a given quarter. This type of program applies to aircraft and drones. This does not include warm-up or taxi time.

3.4.1.2. Type 2, Squadron Months. This is the average number of squadrons using the application each month.

3.4.1.3. Type 3,Equipment Months. This is the average monthly inventory population of the application.

3.4.1.4. Type 4, Program Depot Maintenance. This is the number of scheduled depot level overhauls of an application. This type of program applies to aircraft, missiles and drones applications.

3.4.1.5. Type 5, Sorties. This is the number of take-offs and landings. This type of program applies exclusively to aircraft.

3.4.1.6. Type 6, Engine Overhauls. This is the number of scheduled depot level engine overhauls of an engine. This type of program applies exclusively to engines.

3.4.1.7. Type 7, Drone Recoveries. This is the number of times that unmanned vehicles are successfully retrieved.

3.4.1.8. Type 8, Ammunition Expenditures. The number of rounds expended or projected to be expended. This type of program primarily applies to gun applications.

3.4.1.9. Type 9, Management of Items Subject to Repair (MISTR) Overhauls. The numbers of higher assemblies that are scheduled to be inducted into depot level repair, or have undergone depot repair. This type of program applies to applications identified with a national stock number (NSN) or Program Element Code.

3.4.1.10. D200F also receives and displays the following programs that are related to the active inventory of the end item. D200F uses these programs to determine the squadron months and inventory months programs cited above. D200A does not use these programs:

3.4.1.10.1. Type E, unaveraged PAI.

3.4.1.10.2. Type S, unaveraged total active inventory (TAI).

3.4.1.10.3. Type T, averaged TAI.

3.4.1.11. D200F also develops modification programs for SIRS. Chapter 4, Section 4.9 describes this process.

3.5. Data Sources.

3.5.1. Generally, the source of program data depends on the program type and whether it is past or future program.

3.6. Projected Program Data.

3.6.1. HQ USAF Program Authorizations. Most projected OIM and inventory programs enter the system through a data file received from HQ USAF. This file is issued approximately once every three-calendar quarters electronically and is input directly to D200F. The file includes up to nine years of peacetime program authorizations for each major command. D200F processes this file and derives the aggregate Air Force authorizations and the total authorizations for each fiscal year, and computes a retention authorization. The retention authorization is the total of the last three fiscal years of projected program. Wartime program authorization for the aggregate Air Force must be manually file maintained into D200F.

3.6.2. The Program Authority (PA) file provides data for D200F to develop Type 1 (flying hour), Type 2 (squadron month), and Type 5 (sortie) programs. The file does not explicitly list sorties as a program type. The file includes average sorties duration for each MDS. D200F divides the number of flying hours by the average sortie duration to derive the number of sorties. HQ USAF publishes program documents and updates the HQ USAF Program data base for up to four budget positions: the Program Objective Memorandum (POM), the Budget Estimate Submission (BES), the President's Budget (PB) and, when applicable, the Amended President's Budget (APB). After each mass update of the database, HQ USAF/XPP send the PA file to the HQ AFMC D200F OPR. The HQ AFMC OPR forwards the file to the surveillance programmer, who loads the file into the RMS API database. Per AFI 16-501,the MAJCOMS submit Program Change Requests (PCR) to HQ USAF to request force structure or flying hour changes within the execution and budget year(s). If the PCR is approved, HQ USAF/XOOT sends a message to the MAJCOMs and to HQ AFMC/LGY. The HQ AFMC API OPR manually enters the flying hour adjustments into the database under the appropriate command code.

3.6.3. The PA file also includes data that D200F uses to develop several types of inventory program (see **paragraph 3.4.**). Of these, only Type 3 (inventory months) has any application in the requirements determination process. D200F computes program Type 3 by calculating the quarterly average of the Type E program (unaveraged end of quarter inventory). Because the Type 3 program represents an average monthly program multiplied by three, it should always be divisible by 3.

3.7. Processing the PA File.

3.7.1. Per a Memorandum of Agreement between HQ AFMC/LGY and HQ USAF/XPPE, the HQ AFMC API OPR receives the file immediately after it is produced in digital format, usually via an email attachment in a text file (.txt format). The HQ AFMC API OPR forwards the file to the D200F surveillance programmer in the AFMC Materiel Systems Group (MSG). The surveillance programmer formats the file to allow the system to process the data and post them to the D200F database. The HQ AFMC API OPR may find it advisable to retain a copy of the file and store it off-line on a high capacity medium such as a Zip disk. This will allow review of the raw data should any questions arise about the data.

3.7.2. Table 3.1. is the record format for the PA file. For processing purposes the relevant data elements are: the Aerospace Vehicle (AV) Indicator (MDS), the Data Type, the Cycle Indicator, the Command Code, the Program Element, and program quantities in each position of the execution year and each following program year. See the D200F Functional Description, hierarchy 3.1.2.5 and related sub-hierarchies for a description of how D200F processes the PA file. D200F summarizes the program quantity in each Program Element to program type, to MAJCOM, and to MDS.

3.7.3. The execution year fields have the quarterly program authorizations for the fiscal year (FY) in which the file is issued. If a PA file is issued around the start of a new FY (i.e., during the months of September or October) the HQ AFMC API OPR should review the raw data to insure that the execution year is applied to the next full FY. For example, if a file is issued in October 2002, the execution year should be FY 2003 and not FY 2002. The HQ AFMC API OPR should contact HQ USAF/XOOT for clarification if there are any questions concerning the program projections.

3.7.4. The D200C equipment subsystem develops Type 3 (inventory months) programs for equipment end items (SPD Type Q) and vehicles (SPD Type V) and makes them available to D200F. These programs are based on projected assets in D200C, which projects on hand assets, excluding WRM and replacement assets, through 38 future quarters.

3.7.4.1. D200C multiplies each quarterly program quantity by 3, therefore each quarterly program quantity in D200F should be divisible by 3. Questions regarding program data for a particular SPD should be addressed to the end article item manager.

3.7.4.2. D200C also computes a retention quantity, which is the gross requirement, minus replacement requirements, at the last program position in D200C.

3.7.5. A carryover indicator determines if program quantities will continue from one quarter to the next. The ALC Program OPR or HQ AFMC API OPR can assign the carryover indicator or the system assigns one to certain SPD types.

3.7.5.1. The default value for the carryover indicator is P. This allows the system to replace the program quantity values when new data are received, primarily from a new PA file.

3.7.5.2. A blank carryover indicator applies to programs that automatically carry over from one quarter to the next regardless of any updates. This applies to manually added programs, such as overfly authorizations that the HQ AFMC API OPR inputs.

3.7.5.3. The system assigns carryover indicator “E” to support equipment (SPD Type Q) and vehicle (SPD Type V) end items. This allows the program to carryover on the two semi-annual update cycles in the D200C Equipment subsystem (March and September).

3.8. Past Program Data.

3.8.1. The G099 Reliability and Maintainability Information System (REMIS) provides past flying program data in monthly increments, using data gathered at the unit level. The latest quarterly program is not always available from G099; often the last month’s data will be missing. In these cases D200F will estimate the programs for the months that have no data by dividing the program projection for that quarter by three. The updated data normally reach D200F by the next quarter and users will notice a change in program.

3.8.2. Past DLM program data are derived from the maintenance systems’ reporting of actual repair or overhaul data through the Q302 AFMC Data Depot system. PDMSS/G097, the aircraft scheduling

system used at the depots, houses the aircraft data and aircraft PDM schedules which are provided to Q302, the data base for PDMSS. These aircraft PDM schedules are used by D200F to compute flying hour and inventory programs for Modifications. D363 Maintenance Planning & Execution System (MP&E) gives D200F mod schedules, which are used to compute flying hour and inventory programs for Mods.

3.9. ALC and Contractor Developed Programs.

3.9.1. The ALCs input Type 4 Programmed Depot Maintenance (PDM) programs to reflect aircraft, trainer and missile overhaul schedules.

3.9.2. ALC engine managers develop and enter the Type 6 Engine Overhaul programs.

3.9.3. Type 9 MISTR programs are computed from recoverable and equipment item repair data that reside in the RMS database. The Secondary Item Requirement System (SIRS) process develops the MISTR program from the recoverable item repair output.

3.9.4. Type 4, Type 6 and Type 9 data are received into D200F from an interface with D375 (CSWS). This is contractor-provided program data.

3.10. Program Maintenance.

3.10.1. D200F provides profiles that allow selected users to add, change, or delete program data in the on-line system. Authorized system users can view program data, but only the HQ AFMC API OPR and ALC Programs Monitors have authority to change the data in the system. The ability for a certain user to file maintain program data is determined by the Ownership Code, which all users can view for a given SPD on the Standard Program Designator display screen (Navigation FOE DIS PRGM SPDL – see **Chapter 9**). The API Users Manual (UM) lists all users and their system capabilities in Attachment 2. The API UM is available at the following web site: **https://www.msg.wpafb.af.mil/sxr/rdb.htm**.

3.10.2. Only the HQ AFMC API OPR can change program data with ownership code N. This is generally the systems authorized inventory and operational programs in the PA file that passes from the Air Staff. The HQ AFMC API OPR will change program authorizations to reflect out-of-cycle adjustments for overfly or mission changes, but will not do so without specific authorization from HQ USAF/XOO.

3.10.3. ALC Program Monitors can add, delete, and change program data generated at their respective centers. The Ownership Codes match the single position ALC codes found in the catalog system (G – OO-ALC, H – OC-ALC, L – WR-ALC, P – SA-ALC CPSG). The ALC Program OPRs will manage locally generated Depot Level Maintenance programs. They will also control the application percents applicable to PEC to aircraft relationships that determine the aggregate flying hours and other program related to PECs.

3.10.4. See the API Users Manual for instructions on using the file maintenance screens.

3.11. Command Codes.

3.11.1. Although the D200A SIRS process uses only the aggregate service level program data, the PA file and G099 include data broken down to each major command's authorization. Because of the needs of the Spares Requirements Review Board (SRRB), D200F also passes command level data to

D200A. Users can view Command Level Data via the display screens or file maintenance screens. The following command codes appear in the files and on the screens:

ABC - Out-of-cycle program changes entered by the HQ AFMC API OPR. Only the HQ AFMC API OPR can change program data that are derived from the PA file. The OPR changes these after HQ USAF/XOO specifically authorizes the change, usually to accommodate approved overfly requests.

ACC - Air Combat Command

AET - Aerospace Education and Training Command

AFA - Air Force Academy

AFE - United States Air Forces in Europe

AFR - Air Force Reserve

AMC - Air Mobility Command

ANG - Air National Guard

MTC - Air Force Materiel Command

PAF - Pacific Air Forces

SOC - Special Operations Command

SPC - Air Force Space Command

3.12. Program Reports.

3.12.1. The Output product function allows users to request the AFMC Program Report and to tailor the request to certain program types or SPDs. Reports are processed and generated through CA Dispatch. Users can request global reports that include all program types for all SPDs, which show past and projected programs (WARNING: this is a very large report). Users can limit the size of the report by specifying certain parameters. For example they can request only past or projected program, SPDs of a certain type (e. g., all aircraft), a specific SPD (e. g., F15C), a MD (all series of F15), a mission (F for Fighters only), or only program types 1, 2, 3 and 5, which are the most commonly used OIM programs. See the API Users Manual for instruction on submitting requests for output products. Chapter 6 has descriptions of output products.

NOTE: CA Dispatch reports print according to how the ES's printer is set up under the D200 User ID profile.

3.13. Trend Analysis.

3.13.1. The trend analysis feature allows users to view a history of program projections and program experience. It compares past projections with program data that actually occurred in each quarter, (e. g., the number of flying hours authorized in a previous quarter versus how many were actually flown during that quarter). Trend Analysis includes two screens:, "TAC - Current Proj To Past Proj" which displays projections for up to eight previous quarters as well as the most current quarter, and "TAP - Past Project To Past Actual" which compares the actual program data with what was projected.

3.13.2. The TAC option provides a display of the current program projection in a comparison to the past projections.

3.13.3. The TAC option displays two years of program data, starting in a quarter specified by the user, for the System Program Designator (SPD) and MAJCOM that the user enters. If the user does not specify a starting quarter the system defaults to the quarter that starts on the day after the last asset cut-off date. If the Asset Cutoff Date is 31 Dec 03, the starting quarter, specified in the line labeled "PGMS CAL YR/QTR," is the quarter that ends on 31 Mar 2004. The line labeled "CUR" displays the current program projections from the user specified starting quarter (or the default). The line labeled "-1" is the program that was projected in the previous quarter, "-2" displays what was projected two quarters ago, etc.

3.13.4. With the TAC option users can also view data that applies to specific major command by placing an entry after "COMMAND." See **paragraph 3.11.1.** for command codes. The user must specify a valid program type.

3.13.5. The TAP option provides a display of the past program projections to the past actual program. It allows users to compare actual program activity of a given MDS with what was authorized.

3.13.6. It displays the eight most recent quarters up to the end of the latest asset cut-off date In the line labeled "CUR" the screen displays eight quarters of past program. In the line labeled "-1" the screen displays seven quarters of past program (up to the asset cutoff date), plus one quarter of future program that was projected in that quarter. The line labeled "-2" displays six quarters of past program and two quarters of projected program. Each line displays one less quarter of past program and one more quarter of projected program than the line above it, until the line labeled "-7" displays only one quarter of past program and seven quarters of projected program. Finally, the line labeled "-8" displays eight quarters of projected program. The projected quarters are highlighted so users can distinguish between past and projected programs on any line.

Table 3.1. Program Authorization File Format.

Data Elements	Start Position	Number of Positions
Aerospace Vehicle (AV) Indicator (MDS)	1	7
Configuration ID	8	2
PA Group Indicator	10	1
Active/Inactive Indicator	11	1
Group Indicator	12	1
Data Type	13	2
Cycle Indicator	15	3
Number of Data Years	18	2
Non-zero Data Indicator	20	1
Command Code	21	3
Program Element	24	8
AV Purpose ID	32	2
Foreign Government Owned Indicator	34	1
AV Type ID	35	1
AV Engine Type ID	36	1
Filler	37	36
30 Sep Value	73	8
Quarter 1 Program Qty - Execution Year	81	8
Quarter 1 Program Qty - Execution Year	89	8
Quarter 1 Program Qty - Execution Year	97	8
Quarter 1 Program Qty - Execution Year	105	8
Quarter 1 Program Qty- 1st Program Year	113	8
Quarter 2 Program Qty- 1st Program Year	121	8
Quarter 3 Program Qty- 1st Program Year	129	8
Quarter 4 Program Qty- 1st Program Year	137	8
Quarter 1 Program Qty- 2nd Program Year	145	8
Quarter 2 Program Qty- 2nd Program Year	153	8
Quarter 3 Program Qty- 2nd Program Year	161	8
Quarter 4 Program Qty- 2nd Program Year	169	8
Quarter 1 Program Qty- 3rd Program Year	177	8
Quarter 2 Program Qty- 3rd Program Year	185	8

Data Elements	Start Position	Number of Positions
Quarter 3 Program Qty- 3rd Program Year	193	8
Quarter 4 Program Qty- 3rd Program Year	201	8
Quarter 1 Program Qty- 4th Program Year	209	8
Quarter 2 Program Qty- 5th Program Year	217	8
Quarter 3 Program Qty- 5th Program Year	225	8
Quarter 4 Program Qty- 5th Program Year	233	8
Quarter 1 Program Qty- 5th Program Year	241	8
Quarter 2 Program Qty- 6th Program Year	249	8
Quarter 3 Program Qty- 6th Program Year	257	8
Quarter 4 Program Qty- 6th Program Year	265	8
Quarter 1 Program Qty- 6th Program Year	273	8
Quarter 2 Program Qty- 7th Program Year	281	8
Quarter 3 Program Qty- 7th Program Year	289	8
Quarter 4 Program Qty- 7th Program Year	297	8
Quarter 1 Program Qty- 7th Program Year	305	8
Quarter 2 Program Qty- 8th Program Year	313	8
Quarter 3 Program Qty- 8th Program Year	321	8
Quarter 4 Program Qty- 8th Program Year	329	8
Quarter 1 Program Qty- 8th Program Year	337	8
Quarter 2 Program Qty- 9th Program Year	345	8
Quarter 3 Program Qty- 9th Program Year	353	8
Quarter 4 Program Qty- 9th Program Year	361	8
Quarter 1 Program Qty- 9th Program Year	369	8
Quarter 2 Program Qty-10th Program Year	377	8
Quarter 3 Program Qty-10th Program Year	385	8
Quarter 4 Program Qty-10th Program Year	393	8
Quarter 1 Program Qty-10th Program Year	401	8
Quarter 2 Program Qty-11th Program Year	409	8
Quarter 3 Program Qty-11th Program Year	417	8
Quarter 4 Program Qty-11th Program Year	425	8
Quarter 1 Program Qty-11th Program Year	433	8
Quarter 2 Program Qty-12th Program Year	441	8

Data Elements	Start Position	Number of Positions
Quarter 3 Program Qty-12th Program Year	449	8
Quarter 4 Program Qty-12th Program Year	457	8
Quarter 1 Program Qty-12th Program Year	465	8

Table 3.2. Program Types.

Program Type	Category	Source	How Expressed
1 - Flying Hours	Operational	PA File (Future) G099 REMIS (Past)	Number of Hours
2 - Sorties	Operational	PA File (Future) G099 REMIS (Past)	Number of Sorties
3 – Inventory Months	Operational, Inventory	PA File (Future) G099 REMIS (Past); RMS; SPM Input; D200C	Averaged Primary Active Inventory x 3
4 – Programmed Depot Maintenance	Maintenance	SPM Input	Number of Overhauls
5 – Squadron Months	Operational	PA File (Future) G099 REMIS (Past)	Number of Squadrons/3
6 - Engine OH	Maintenance	SPM Input	Number of Overhauls
7 – Drone Recoveries	Operational	SPM Input	Launched minus Expended
8 - Ammunition Expenditures	Operational	SPM Input	Number of Rounds
9 - MISTR	Maintenance	RMS, SPM Input	No. of Overhauls or Repairs

Chapter 4

APPLICATIONS

4.1. Description.

4.1.1. The applications portion of D200F is where programs are distributed to secondary components. The information in the applications portion defines the relationship between components and the higher assemblies that generate programs. Program data are directly assigned to each application and the application relationships identify the components that will potentially be assigned program from those applications. Data elements peculiar to each application determine how much of the program to assign to each component.

4.1.2. A Standard Program Designator (SPD) is an end item or assembly that generates programs. A SPD may also be referred to as an “application program designator” or a “standard reporting designator.” An SPD becomes an “application” when one or more components have been selected to receive program data from that SPD. Table 4.2 at the end of this chapter lists the types of SPDs used in RMS and their formats. An SPD can be up to 25 characters long. A standard designator or an aircraft or missile MDS can be part of the 25-character SPD.

4.1.3. IAW AFMCMAN 23-1 Chapter 18, paragraph 18.4, *Requirements For Secondary Items (D200A, D200N)* the Equipment Specialist file maintains all needed applications into API for each D200A SIRS item. SIRS items should have at least one application file maintained to identify the "major end item", the weapon system, support system, communication-electronic network or equipment that the item is used on. In addition, each SIRS item should be linked by its program selection record in API, to all applications (major end items and next higher assemblies) that require the use of this component for continued operation. The ES file maintains each item's Program Selection record containing each application with the Program Select Code, mission item essentiality code, the application's program begin date(s), quantity per application(s) and application percent(s). Application percents include Engine percents.

4.1.3.1. Engine percents are supplied to the HQ AFMC API OPR from OC-ALC/LPRI and are then tasked to the ALC API OPR and ALC ES OPR to have the System ESs file maintain the data into the API system under the PS Screen.

4.2. D200F SPD Table. D200F maintains a table of valid SPDs. The SPDs in this table are sorted by broad categories known as SPD Types. Table 4.2 lists the SPD types and their formats.

4.2.1. D200F maintains an on-line list of SPDs to which users can assign program on the SPD Table. Users can add, delete, or change SPD data by updating the SPD Table in the on-line system (navigation FOE FM PRGM SPD). ALC Program Monitors with ownership codes that match the ALC code and the HQ AFMC API OPR can update records.

4.2.1.1. The following paragraphs contain essential information on some SPD Types:

4.2.1.1.1. An aircraft , drone, or missile MDS (SPD Type A, R or M) is seven characters long and includes the following components:

4.2.1.1.1.1. Mission indicator for aircraft and drones in position 3. Type for missiles in position 3. This is always alphabetic.

4.2.1.1.1.2. Series indicator in positions 4 through 6. This is always numeric.

4.2.1.1.1.3. Series indicator in position 7. This is always alphabetic.

4.2.1.1.1.4. Modified mission for aircraft and drones in position 2. Mission indicator for missiles in position 2. This is always alphabetic.

4.2.1.1.1.5. Status prefix for aircraft in position 1. Launch environment for drones and missiles in position 1. This is always alphabetic.

4.2.1.1.2. D200F automatically adds Type Q (support equipment) and Type V (vehicle) to the SPD Table based on information received from the D200E subsystem.

4.2.1.1.3. If the ERRC code in D200E is "S" or "U," D200F adds the SPD NSN to the SPD Table with SPD Type Q (support equipment) except when budget code is "V".

4.2.1.1.4. If the ERRC code in D200E is "S" or "U," and the budget code is "V," D200F adds the SPD NSN to the SPD Table with SPD Type V (vehicle).

4.2.1.1.5. A standard designator has 12 positions and can accommodate MDSs, TMSs (engines), guns, Communications Electronic (CE) Network designators, trainer systems, and Communication/Electronic/Meteorological (CEM) system designators. A standard designator is one type of SPD.

4.2.1.1.6. The 25-position SPD format accommodates all SPD and MDS applications with notations indicating FMS customers, obsolescence, or reclamation uses. It also accommodates modification SPDs (see **Table 4.1.**). The modification indicator (R or I) is in position 13, and the modification serial number is in positions 14 through 25.

4.3. Equipment Specialist Application Responsibilities.

4.3.1. The ES insures that indentures and the application programs are complete and accurate.

4.4. Program Selection.

4.4.1. Program selection is the process that assigns program data from an application to a component. D200F's program selection feature allows automated and manual linkage of components to their applications. Each component must have at least one application in order to compute requirements. An application passes Operational and Maintenance Programs to a component, either directly or through one or more intermediate links in the program selection chain.

4.5. Indentures and Linkage Data.

4.5.1. If no application linkage data exists, D200F assigns programs from applications to components through the indenture structure, and modifies the program data by applying certain linkage data that define the relationship of each component with its higher assembly. The linkage data elements are: quantity per assembly (QPA), application percent (APPL%), and the maintenance replacement percent (REPL%). **Figure 4.1.** is an illustration of a notional indenture chain that includes a component, Card A, and its next higher assembly, the radio transmitter that are common to the F15C and the F16A aircraft.

4.5.1.1. Quantity per Application (QPAPPL) should not be confused with Quantity per Assembly (QPA). QPA is the number of components that are installed in that component's next higher

assembly in the indenture structure. QPAPPL is the number of components that are installed in a higher assembly that is also the component's application (note that the application and the next higher assembly may or may not be the same assembly). If this QPAPPL is developed from the physical relationships found in the indenture structure, it is known as a derived QPAPPL. The example in **Figure 4.2.** has an aircraft application with components, Card A and Card B, on the second level of indenture below the aircraft end item. The system computes the derived QPAPPL for the two cards by multiplying the QPA of the card to the computer by the QPA of the computer to the F15C. The QPA for Card A to the computer is 1, for Card B to the computer is 2. The QPA for the computer to the F15C is 2. Therefore, the derived QPAPPL is 2 for Card A (1 X 2) and 4 for Card B (2 X 2).

4.5.1.2. The equipment specialist can change the QPAPPL in D200F's Program Selection function. If the ES overrides the derived QPAPPL value, D200F displays the changed value as the "Override QPAPPL."

4.5.2. The system will not allow deletion of a SPD that has any program data. Users must delete the program quantities on the past program screen (navigation FOE FM PRGM FPAP), the peacetime future program screen (FOE FM PRGM FPRP), or the projected wartime program screen (FOE FM PRGM FFWD) before deleting a SPD.

4.5.3. Many indenture relationships in D200F are established as the result of an interface. If the interface does not supply an application percent or a QPA, D200F establishes both the QPA and Application percent on the indenture relationship with zero as the default. When deriving an application percent, 100 percent is substituted for an application percent of zero on the indenture. Likewise, when deriving a QPAPPL from the indenture relationships, a QPA of 1 is substituted for a QPA of zero on the indenture.

4.5.4. A source reference code (SRC) indicates how the value of the field was acquired. This code is applicable to the system essentiality code for the application, the subsystem essentiality code, and the item essentiality code that are a part of the application relationship. The SRC codes used for these 3 fields and their definitions are:

4.5.4.1. A – "Actual;" received from a system interface.

4.5.4.2. C – "Computed;" derived from reporting from a maintenance activity.

4.5.4.3. E – "Estimated" or "entered;" derived through ES manual update.

4.5.4.4. S – "Standard;" default value.

4.6. Application Percent.

4.6.1. The Application Percent (APPL%) is the percentage of the population of higher assemblies that has a given component installed in it. The system assigns a default value of 100% to each component-application relationship, (i.e., the D200F assumes that the component is installed in 100% of its next higher assembly's population). The equipment specialist can change the APPL% in D200F's Program Selection function. The most common reason to change APPL% is to reflect a modification program's installation and removal schedule.

4.6.2. If the ES changes the default value, D200F displays the changed value as the "Override Application Percent."

4.7. Replacement Percent.

4.7.1. The Replacement Percent (REPL%) applies to items that receive depot level maintenance programs from an application. It indicates the percentage of components installed in the application that are removed and replaced as the application undergoes overhaul or repair. D200F computes the replacement percent according to the consumption and production history the maintenance systems report. The replacement percent is the number of components removed from a higher assembly during overhaul, divided by the number of components installed in those assemblies while they undergo overhaul.

4.7.2. D200F computes a "Derived Replacement Percent," which is the replacement percent that is part of the relationship between the component and the application. The derived replacement percent considers all levels of indenture between the component and the application.

4.7.3. The percentage of the population of a component's NHA that has the component installed is displayed as the "Indenture Replacement Percent." If the NHA and the application are the same assembly, the indenture replacement percent and the derived replacement percent are equal.

4.7.4. The ES can estimate the replacement percent and enter it into the system as an "Override Replacement Percent." Override replacement percents can only be assigned to components with ERRC N, P, C or T. An override replacement percent will influence the component requirements displayed on the Materiel Requirements List and the Purchase Request Support List (see **Chapter 5**).

4.8. Program Distribution.

4.8.1. D200F distributes program from the SPD to components through a series of calculations that consider the program quantity, the APPL%, and the QPAPPL. The notional examples in **Figure 4.3.** and Figure 4.4 illustrate the program distribution process.

4.8.2. The two aircraft applications in **Figure 4.3.**, as SPD applications, receive program authorization from HQ USAF in the PA file. That program will flow through the radio transmitter to Card A. The program that applies to Card A may not match the program that applies to the aircraft. That is because D200F will consider the QPA and the APPL% for Card A and for the transmitter and calculate the program for both components. **Figure 4.2.** illustrates how the program is distributed to the component.

4.8.2.1. Using the data in **Figure 4.3.** the system can calculate the total item program for use in the D200A SIRS requirements computation.

4.8.2.2. The quarterly flying hour program is 500 for the F15C and 700 for the F16A. Card A (lower right corner) has a QPA of 2 for the Card A to Radio Transmitter relationship; and a QPA of 1 for the Radio Transmitter to F15C relationship and for the Radio Transmitter to F16A relationship. The QPAPPL for Card A to the F15C is 2 and the QPAPPL for Card A to the F16A is 2. Card A has an APPL % of 90. The system computes an item application program for Card A to F15C of 500 x 0.90 x 2 = 900. The system also computes an item application program for Card A to F16A of 700 x 0.90 x 2 = 1260. The system adds the two item application programs for Card A of 900 + 1260 to obtain an item program for Card A of 2160.

Figure 4.1. Distribution of Operational Program.

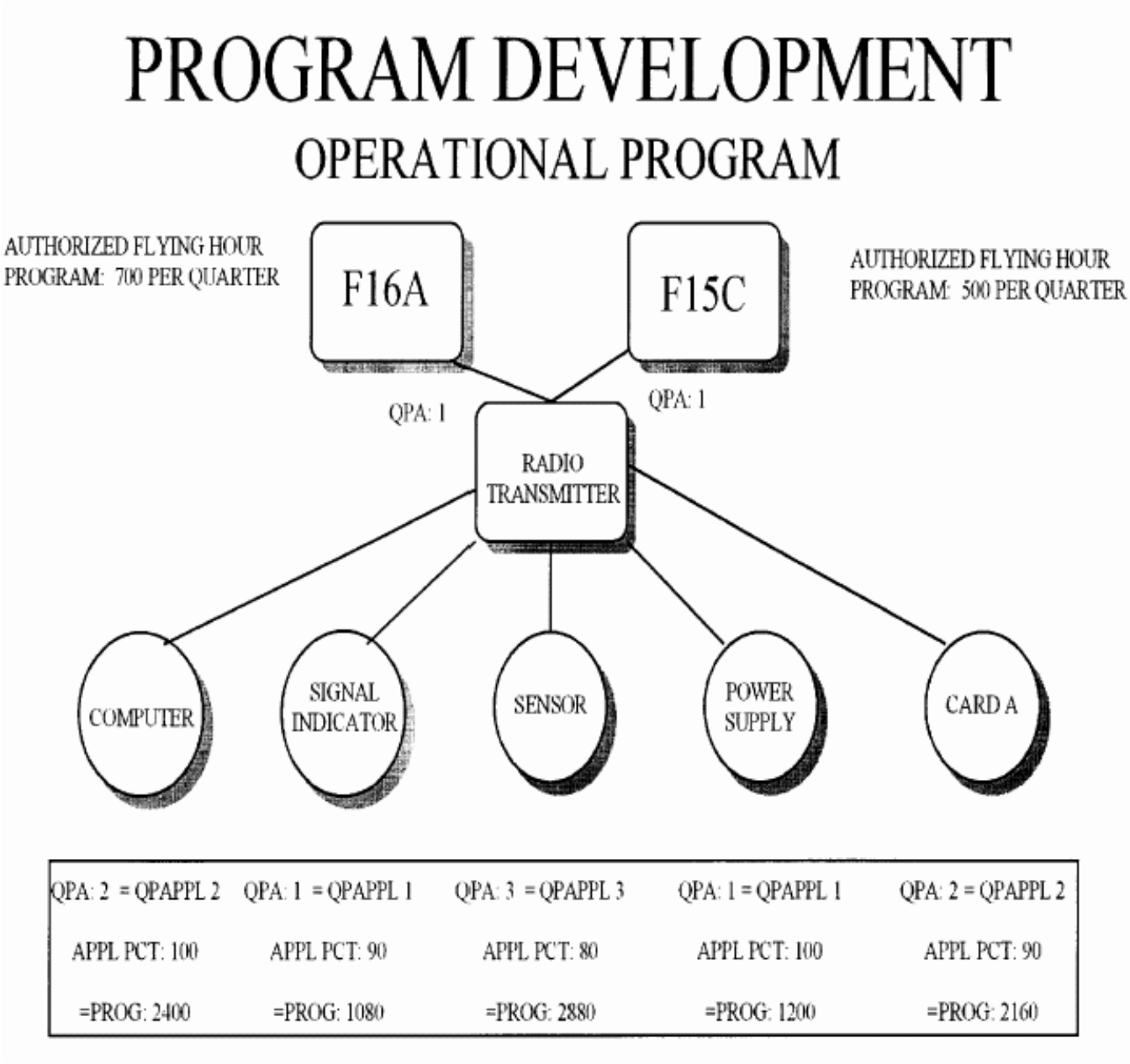

4.8.3. The equipment specialist completes the program selection tasks using the Program Selection screen in the online system. Currently this is a "bottom up" process in which the ES responsible for a component specifies which SPD will pass program to components of that SPD, and how much.

4.8.4. A significant change from the former D041 program selection process is the two-position application program select code (PSC), rather than the four-position code in D041. Since an SPD can have only one OIM and one overhaul program, only two positions are necessary. Each position corre-

sponds to the program types described above. Note that the four-position code is still displayed on the display screens for the program selection relationships.

4.8.5. All users can view program selection data through the display function. The SPD program selection screen (navigation FOE DIS AI PDPS) displays all components of an SPD that the user has entered. The component program selection screen (navigation FOE DIS AI CPS) is the "bottom up" version of program selection; it displays all SPD applications of a given component.

4.9. Programs Tailored to Modification Schedules.

4.9.1. When a component is installed during modification, its requirements must correspond with the anticipated program increase. If the component being installed replaces another component, the component being replaced must have a corresponding decreasing program to phase out its requirements. D200F determines the application percent that will apply to all components' scheduled removal from and installation in an end item during the modification computation process. Those application percents are neither stored in D200F nor passed to D200A. The system computes percents in quarterly increments for up to 8 past quarters and up to 38 future quarters.

4.9.2. Modification schedules for Class IV and V aircraft and missile modifications automatically pass to D200F from the D363 system. D200F uses these modification schedules and the application percents it derives from the aircraft and missile program data to develop modification programs for flying hours (program type 1) and inventory (program type 3). These modification programs are applied to the D200F tables and passed to D200A.

4.9.3. Modification standard program designators (SPD) include the end item identification in normal format (**Table 4.1.**), a suffix indicator in position 13, and a modification serial number in positions 14 through 25. The modification serial number is the same in both modification SPDs, but the suffix indicators are different. Suffix "R" applies to the Removal Program and suffix "I" applies to the Installation Program. Modification Programs appear in D200F as SPD Type Z. Following is an example of the modification SPDs for a single modification program:

Table 4.1. Modification SPD Format.

	MDS							SUFFIX					SERIAL NO.									
Position	1	2	3	4	5	6	7	8	9	10	11	12	13	14	15	16	17	18	19	20	21	22
Remove			A	0	1	0	A						R	F	1	0	3	3	6	A		
Install			A	0	1	0	A						I	F	1	0	3	3	6	A		

4.9.4. Each program involves time phasing, a decreasing or an increasing program, in each quarter of the modification period. The installation program projects an installation of the new item into the SPD and the removal program projects removals of the old item from the SPD. Each increase should accompany a corresponding decrease and the total program application percents of the two SPDs in any given quarter should be 100. **Figure 4.5** illustrates distribution of the application percents over the modification period.

Figure 4.2. Modification Processing.

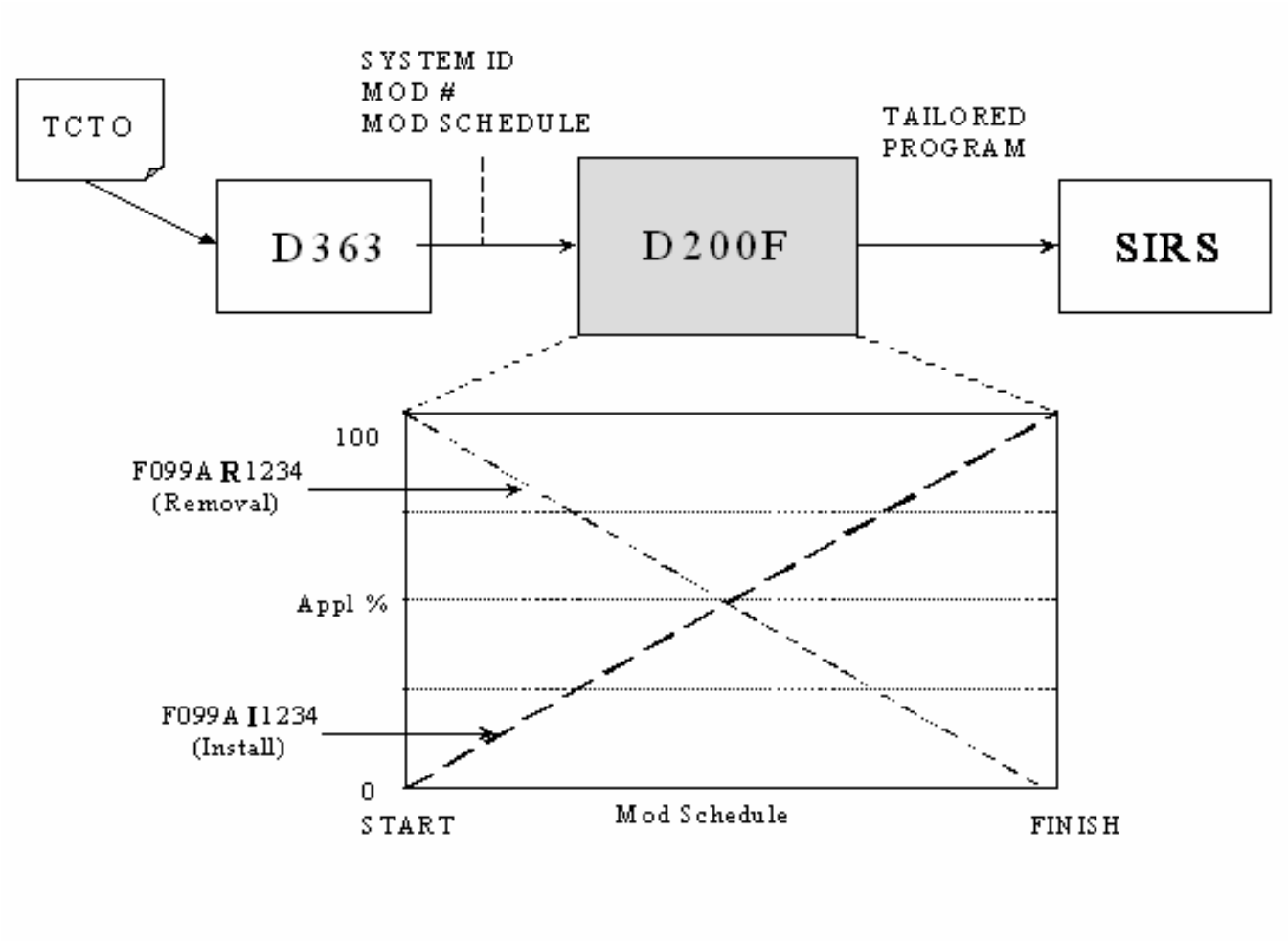

4.10. Mission Item Essentiality Code (MIEC).

4.10.1. The MIEC is a three-position alphanumeric code that indicates an item's relative importance to weapon system support. The first position is the System Essentiality Code (SEC), the second position is the Sub-System Essentiality Code (SSEC), and the third position is the Item Essentiality Code (IEC). The MIEC has limited application in RMS processes. Its original intent was to help allocate resources by weapon system, and to establish funding and repair priorities. The following paragraphs explain the values for each position and their meanings.

4.10.2. HQ USAF assigns the SEC. The valid values and their meanings are:

4.10.2.1. SECs 1, 2, 3, and 4 indicate applications that may have more than a peacetime operating program. SEC 4 can also apply to new applications and to applications that cannot be related to aircraft

4.10.2.2. SEC = 5 for applications that only have a peacetime operating program.

4.10.2.3. SEC = 6 for applications being phased out of the Air Force inventory and applications being held for reclamation projects.

4.10.2.4. SEC = 7 for FMS only applications.

4.10.2.5. MIEC 7MM indicates FMS usage at the application level. It applies to applications with a FMS country code in positions 14 and 15 in the SPD field.

4.10.2.6. MIEC 7PP applies to applications identified by a stock number or a program element code (PEC). It is the item MIEC for components that have stock number and PEC applications only.

4.10.2.7. MIEC 7ZZ applies to new components entering the inventory.

4.10.2.8. SEC = 8 applied to certain non-airborne system applications in the former D062 system that are subsystems of other applications.

4.10.2.9. MIEC 8CC refers to communications-electronics meteorological (CEM) applications. A new CEM application can apply only to a standard C-E network or MDS.

4.10.2.10. MIEC 8DD refers to engine modules. An engine module application can apply only to a standard type-model-series (TMS).

4.10.2.11. MIEC 8GG refers to guns. A gun application can only apply to a standard MDS.

4.10.2.12. MIEC 8SS refers to electronic subsystems systems. A system application can apply only to a standard C-E network or MDS application.

4.10.3. The second position is the Subsystem Essentiality Code (SSEC), and indicates the relative importance of the subsystem immediately indentured to the end item. The ES assigns the SEC. The valid values and their meanings are:

4.10.3.1. A - Not Mission Capable; lack of subsystem prevents the system from performing any wartime or peacetime mission. Whole engines, as subsystems, are assigned SSEC A.

4.10.3.2. B - Not Wartime Mission Capable; lack of subsystem impairs the performance of wartime and assigned missions.

4.10.3.3. C -Not Fully Mission Capable; lack of subsystem impairs the performance of wartime and assigned missions, but the system can perform at least 1 assigned mission.

4.10.3.4. D - Not Peacetime or Training Capable; lack of subsystem prevents the system from performing its peacetime/training mission.

4.10.4. The third position of the MIEC is the item essentiality code (IEC) and indicates the component's importance to the subsystem. The ES file maintains this position for the item. The valid codes and their meanings are:

4.10.4.1. E - critical for operation.

4.10.4.2. F - impairs operation.

4.10.4.3. G - not critical for operation.

4.10.4.4. M – FMS; can only be used with SEC 7 and SSEC M.

4.10.5. Each application has an MIEC that D200F derives from the indenture relationships and/or program selection relationships. The following paragraphs explain the derivation processes.

4.10.5.1. D200F maintains a MIEC Priority Table that lists and establishes priorities for all MIEC combination. Only the HQ AFMC API OPR can change this table. See **Table 4.3.** for MIEC priorities.

4.10.5.2. In its simplest form the component MIEC has the same SEC as its application and the same SSEC as its next higher assembly. Many components have several applications and some components are present in several indenture chains under the same end item. In these cases D200F builds an application MIEC for each application by deriving the highest priority MIEC from among the components in the program selection records and assigning it to the application.

4.10.5.3. **Figure 4.3.** is a notional example of a component, "Card A," that has two applications, the F16A and the F15C. It also has three NHAs, the radio transmitter, and the fire control and the computer. These NHAs have respective SSECs C, B, and A. Card A has IEC of either F or E depending on the NHA, and four indenture chains up to the applications and therefore can have up to four MIECs (one for each chain).

4.10.5.4. Based on the assigned SECs, SSECs, and IECs, Card A as a component has, depending on its NHA and application, one of four MIECs: 2AF, 2CE, 2BF, and 3AF. Among these, the highest priority MIEC on the MIEC Priority Table in **Table 4.3.** is MIEC 2CE (priority 6).

4.10.5.5. The applications retain their SEC (2 and 3) but derive the SSEC -IEC combination from the highest ranked MIEC in the chain between the application and the component. The MIEC for the F16A Application is 2CE, based on the highest MIEC among those developed on three indenture chains between Card A and the application. The MIEC for the F15C application is 3AF, based on only one indenture chain between the component and the application.

4.10.5.6. Some applications do not have SECs -- recoverable items identified by NIIN, for example. The SECs for these applications are the same as the highest SEC of the end item on which the application is installed.

4.10.5.7. The ES can change the application MIEC on the Program Selection screen in the on-line system. However, if the SEC or the SSEC were derived, D200F will not allow them to change. If the SEC and SSEC are not blank, the IEC cannot be blank.

4.10.5.8. If a user changes an application SEC or a NHA SSEC, and the change increases its priority above the item MIEC, the Item MIEC increases to the new value. For example, a user changes a SEC from 3 to 2 and a component's MIEC is 3BF, the component MIEC changes to 2BF.

4.10.5.9. If the application is an SPD used only by FMS customers, SEC 7 applies and the application MIEC is 7MM. These SPDs have a country code in positions 14 and 15 or "FMS" in positions 14 through 16.

4.10.5.10. D200F considers only valid MIEC codes when deriving application MIECs. The codes must have the valid values described above in each position, and all three positions must be filled (no blanks).

Figure 4.3. Mission Item Essentiality Code Derivation.

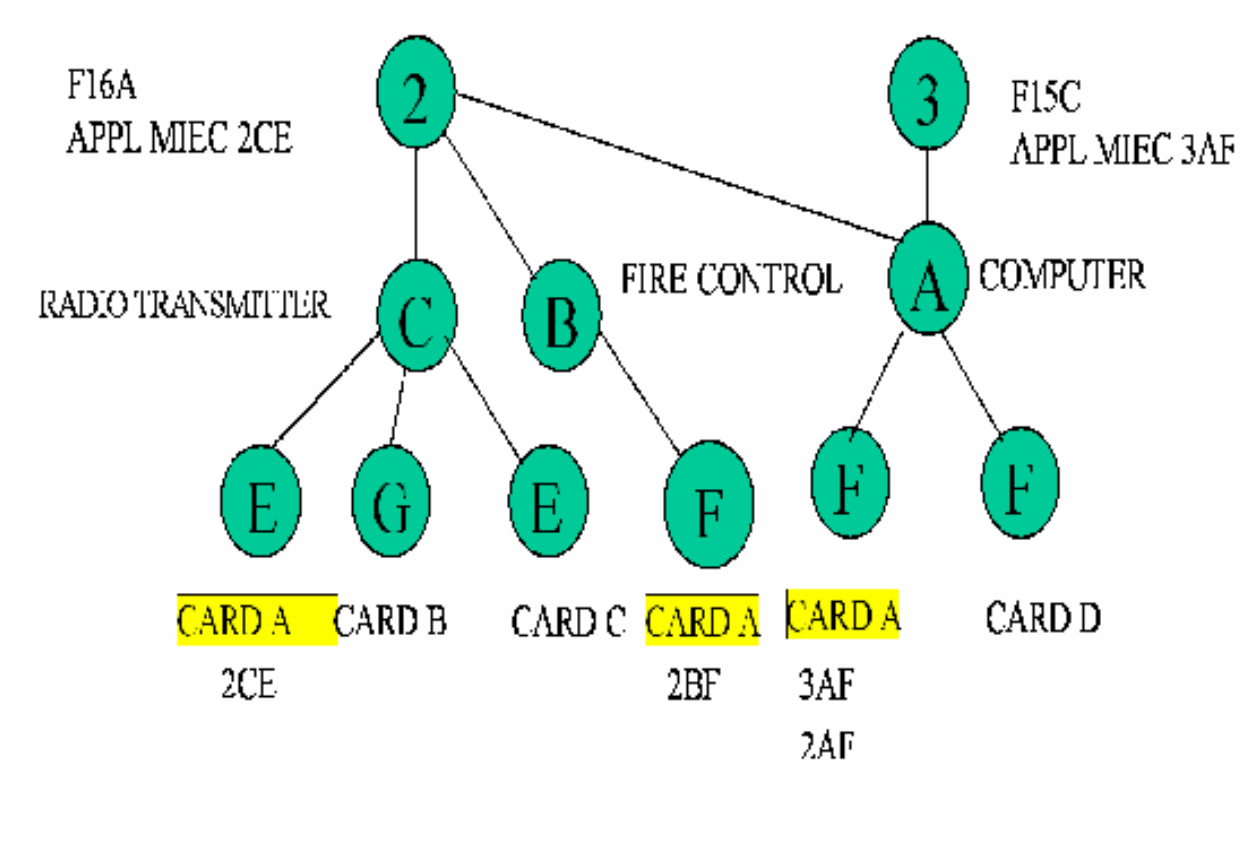

4.11. Program Application.

4.11.1. Each application record includes at least the following elements:

4.11.1.1. The Standard Program Designator.

4.11.1.2. The Program Select Code (PSC). The PSC is a two-position numeric code assigned to each component that is expected to be removed from a higher assembly and replaced. A component can be assigned OIM and DLM programs at the same time.

4.11.1.2.1. The first position identifies the organizational intermediate maintenance (OIM) program. The OIM program indicates activities performed by the user of the end item. Aircraft operating (flying) hours are the most frequently used programs. Other OIM programs are squadron months, equipment months, and sorties. Only one OIM program can apply to a component.

4.11.1.2.2. The second position identifies the depot level maintenance (DLM) program. The DLM program indicates the number of times a component's higher assembly – either an engine, an aircraft, equipment, or higher level component – will undergo overhaul or depot level repair, during which the component is subject to removal and replacement. DLM programs include aircraft programmed depot maintenance (PDM), engine overhauls (EOH), and higher assembly repair. Higher assembly repair is commonly referred to as "Management of

Items Subject to Repair (MISTR)." A component can carry different DLM programs on different applications.

4.11.1.3. The PSC allows the ES to select programs applicable to a particular relationship. The PSC must be consistent with a SPD Type code. For example, equipment SPDs normally should not select flying hours as their OIM program or aircraft PDM as their DLM program. This field must be accurate for the system to select the correct application program. If the ES does not enter the proper PSC, the system may develop too much or too little program.

4.11.1.4. D200F builds an Item Program Select Code for each component in the program select records for use on the Program Select display screens only. The item PSC is derived from the PSCs assigned to all of a component's applications. The item PSC is a four-position field.

4.11.1.4.1. The first position indicates the OIM program and corresponds to the program type code (see **Chapter 3**, **paragraph 3.3.**)

4.11.1.4.2. Positions two through four identify the depot level maintenance program to apply to the component. "X" in any of these positions indicates the type of DLM program the component receives from its applications. The second position identifies program depot maintenance (PDM) program, the third position identifies engine overhaul program, and the fourth position identifies Management of Item Subject to Repair (MISTR) program.

4.11.1.5. The Program Begin Date (PBD). This is a calendar quarter expressed in YYYY/MM format, and is assigned to each application. The PBD is the starting point for computing an Item Program from the Application Program identified by the SPD and the Program Select Code. This field should always reflect the quarter when the component was first installed in the application SPD.

4.11.1.6. Some SPDs are not end items or assemblies in themselves and therefore do not have indenture relationships. Examples are program element codes (PECs), which involve unique combinations of several end items, Modification Designators, and FMS Designators. Because no linkage data can be derived from indenture relationships, the ES must assign an Override Application Percent and an Override Quantity Per Application (QPAPPL) to these applications.

4.11.2. Application Record.

4.11.2.1. The Application record includes a component and its application (SPD), the OIM and DLM application programs, the MIEC, and any time-phased linkage data needed to determine component programs.

4.11.2.2. Standard Program Designator (SPD).

4.11.2.2.1. The SPD specifically identifies any assembly that requires spare part support for continued operation. This can include an aircraft or missile MDS, an engine, a vehicle, a piece of equipment, a trainer, a program element code, or a modification designator. An SPD can be a component of another SPD. For example, an aircraft MDS can be a higher assembly of an engine TMS. The program selection table must reflect this relationship.

4.11.2.2.2. Each SPD is assigned a code (SPD Type Code) that identifies the type of SPD. For SPD type codes See **Table 4.2.**.

4.11.2.3. The Program Development code (PDC).

4.11.2.3.1. The PDC defaults to a blank. With justification and documentation, the ES may insert values of "P" or "F." “P” allows only past programs to pass to SIRS, and “F” allows only future programs to pass to SIRS.

4.11.3. Auxiliary Power Unit Factor (APU).

4.11.3.1. APUs are special purpose engines used to start aircraft engines, ground electrical units, or pneumatic power units. The APU factor is a percentage used if the component is part of an engine TMS with SPD type "X". D200F uses the APU factor to adjust the application program according to a ratio of APU operating hours to the TMS or MDS operating hours. The default value is 100%.

4.11.4. Time Phased Date.

4.11.4.1. D200F uses a Time Phased Date to identify the phases in a modification program. This element is expressed as a future calendar quarter in YYMM format. The most common use for the time-phased date is when performing program selection for the engine computation or the item program computation for the D200A Snapshot process.

4.12. Application Guidelines.

4.12.1. Consider the following rules when establishing or maintaining application and program selection records:

4.12.1.1. Each program selection record must include, at a minimum, a program select code and a program begin date.

4.12.1.2. A component must be indentured to an SPD to select program from that SPD. However, the component need not be in next lower level of indenture. In the example in **Figure 4.3.** any of the five components can receive flying hour program from the SPDs even though they are two levels of indenture below them and they are immediately indentured to the radio transmitter.

4.12.1.3. The program must be consistent with the application. For example, an engine TMS cannot generate PDM program, nor can a piece of support equipment generate flying hour program. Secondary items should not be assigned operational programs. D200F includes an internal table of valid programs that apply to each SPD type. The HQ AFMC API OPR maintains this table.

4.12.1.4. Consider the type of activity that best suits the component. For example, brakes and struts may have aircraft applications, but flying hours usually are not their most suitable programs. Since the take-offs and landings create the stress on these components and cause them to fail, sorties would be a more logical program.

4.12.1.5. “00” is a valid program select code. This PSC can identify a reference SPD, one that indicates an end item or system that a component supports but does not include the component in its indenture. An example is a circuit card in the computer test station of the F15 Avionics Intermediate Shop. The circuit card is an indentured component of the test station, which supports maintenance of the F15 aircraft. The ES may choose to create application record for any or all series of the F15, with the circuit card as the component and the aircraft and the test stations as applications. The PSC for the aircraft is 00 since it is entered only as information. The test station passes operational program, probably inventory months, to the circuit card.

Table 4.2. Application Input Format

Type	Position	1	2	3	4	5	6	7	8	9	10	11	12	13	14	15
A	Aircraft MDS	_	_	C	0	0	5	B	_	_	_	_	_	_	_	_
A	Aircraft MDS	_	K	C	1	3	5	A	_	_	_	_	_	_	_	_
A	Aircraft MDS	H	K	C	1	3	5	A	_	_	_	_	_	_	_	_
A	FMS AIRCRAFT	_	_	F	1	0	4	C	_	_	_	_	_	_	A	T
A	FMS AIRCRAFT	_	T	F	0	0		1	4	0	0	_	_	_	G	R
C	CEM	A	N	A	T	Q	1	_	_	_	_	_	_	_	_	_
C	CEM	A	N	A	L	1	1	T	4	_	_	_	_	_	_	_
D	Engine Module	_	_	T	0	0	5	6	C	1	5	_	_	_	_	_
E	Engine TMS	_	_	F	0	1	0	0	2	2	0	A	_	_	_	_
E	Engine TMS	_	G	R	0	0	8	5	1	8	0	_	_	_	_	_
E	Engine TMS	F	X	J	0	0	7	9	0	1	1	A	_	_	_	_
E	Engine TMS	G	S	O	0	4	8	0	B	1	0	A	6	_	_	_
G	GUN	M	6	1	_	_	_	0	_	_	_	_	_	_	_	_
G	GUN	G	A	U	8	_	_	1	5	_	_	_	_	_	_	_
L	C-E NETWORK	4	0	7	L	_	_	_	_	_	_	_	_	_	_	_
L	C-E NETWORK	8	0	2	L	_	_	_	_	_	_	_	_	_	_	_
M	Missile MDS	A	I	M	0	2	5	B	_	_	_	_	_	_	_	_
P	Program Element Code	5	6	0	1	2	_	_	_	_	_	_	_	P	_	_
P	Program Element Code	1	0	0	3	C	_	_	_	_	_	_	_	P_	_	_
Q	Support Equipment	0	0	1	7	6	9	2	0	0						
R	Drone MDS	_	Q	F	1	0	2	A	_	_	_	_	_	_	_	_
T	Trainer	3	E	F	0	0	0	_	_	_	_	_	_	_	_	_
T	Trainer	1	A	D	0	0	0	A	_	_	_	_	_	_	_	_
V	Vehicle	0	1	1	2	9	4	7	0	2					_	_
X	Auxiliary Power Unit	_	_	T	0	0	5	6	0	0	0	7	A	_	_	_
Z	Modification	See **Table 4.1.**														

Table 4.3. MIEC Priority.

MIEC	PRIORITY	MIEC	PRIORITY
1AE	01	4BF	29
1AF	10	4BG	46
1AG	37	4CE	21
1BE	02	4CF	30
1BF	11	4CG	52
1BG	43	4DE	58
1CE	03	4DF	64
1CF	12	4DG	70
1CG	49	5AE	22
1DE	55	5AF	31
1DF	61	5AG	41
1DG	67	5BE	23
2AE	04	5BF	32
2AF	13	5BG	47
2AG	38	5CE	24
2BE	05	5CF	33
2BF	14	5CG	53
2BG	44	5DE	59
2CE	06	5DF	65
2CF	15	5DG	71
2CG	50	6AE	25
2DE	56	6AF	34
2DF	62	6AG	42
2DG	68	6BE	26
3AE	07	6BF	35
3AF	16	6BG	48
3AG	39	6CE	27
3BE	08	6CF	36
3BF	17	6CG	54
3BG	45	6DE	60
3CE	09	6DF	66
3CF	18	6DG	72

MIEC	PRIORITY	MIEC	PRIORITY
3CG	51	7MM	73
3DE	57	7PP	74
3DF	63	7ZZ	75
3DG	69	8GG	76
4AE	19	8PP	77
4AF	28	8XX	78
4AG	40	8ZZ	79
4BE	20		

Chapter 5

DEVELOPMENT OF DATA FOR D200A PROCESSING

5.1. General.

5.1.1. D200F prepares data each calendar quarter to support each of the D200A Secondary Item Requirement System (SIRS) computations. SIRS needs data from the program tables and program selection relationships to be frozen to insure consistent data throughout each computation cycle. This requires D200F to extract program selection data, to compute Item Program and Item Application data, and to store the data on the Requirements Management System (RMS) database for SIRS to use. D200F processes a snapshot for each recoverable computation cycle: initial, final, and summary.

5.1.2. RMS retains only the last cycle processed in each quarter, and that is normally the summary cycle. SIRS archives and retains eight quarters of history of the data developed for the snapshot.

5.1.3. D200F builds Snapshot tables for D200A before the initial, final , and summary computation cycles. These Snapshot tables include the Application Program table (containing MDS flying hour and inventory program data), Recoverable Program Select table (containing Program Select data from D200F tables plus converted Program Select data), Item Application Factor table (containing Override Time Phased data from D200F plus converted Override Time Phased data), Item Application Program data (containing program data for each Recoverable item to its application), and Item Program data (contains program data for each Recoverable item across all its applications). D200F computes the programs according to the methodology described in **Chapter 4**. The system builds the application tables after processing end-of-quarter stock list changes in order to coincide with the D200E snapshot. Users can view the item program data on the SIRS item program data screen (navigation FOE DIS RCVS SND IPD – see **Chapter 9**). D200F prepares the SIRS snapshot by computing the following sets of data in sequence:

5.1.3.1. Mission-Design-Series (MDS) future peace program.

5.1.3.2. MDS war program.

5.1.3.3. Item program select and application data.

5.1.3.4. Time phased factors.

5.1.3.5. Item application programs.

5.1.3.6. SPD conversion for the Aircraft Availability Model (AAM).

5.1.3.7. Item programs.

5.2. MDS Future Program.

5.2.1. D200F extracts projected flying hour (Type 1) and primary inventory months (Type 3) data for aircraft MDSs from the program data (See **Chapter3**).

5.2.2. The system selects records with Standard Program Designator Type ‘A’ and Standard Program Designator Subtype blank. This selection includes aircraft in the active Air Force inventory, but excludes FMS aircraft, reclamation aircraft, and aircraft modification Programs.

5.2.3. D200F converts primary inventory months to average primary active inventory (Type A) programs by dividing the Type 3 program by three within each projected quarter (Avg PAI = Inventory Mos/3).

5.2.4. If the Program Development Code on the program select record is blank or F the system builds and maintains thirty-eight quarters of future peace program, beginning with the current Program Calendar Quarter. The Program Calendar Year Quarter is the first quarter of projected program and changes with each SIRS computation cycle. The Program Calendar Year Quarter is expressed in the YYYY/MM (where MM can contain '03', '06', '09', or '12' only) format and is the last month of the calendar quarter that begins on the day after the SIRS asset cut off date.

5.2.5. D200F maintains program data internally by calendar year. For the SIRS snapshot, D200F converts the data to Fiscal Year, Fiscal Year Quarter, and Position Indicator. The position indicator is a number between 1 and 39 that indicates where a particular quarter falls among the 38 quarters of program projection. The indicator for the first quarter, the quarter indicated by the Program Calendar Year Quarter, varies from 1 to 4 depending on the calendar quarter. D200F shifts the Program Data before the Initial API Snapshot each quarter.

5.2.6. The retention quantity is the sum of the last three years of program data and is the 39th Position Indicator. D200F appends the retention quantity at the end of the program data. The retention quantity is visible only at the service (aggregate) level. Screens that display command level data do not display a retention quantity.

5.3. MDS War Program.

5.3.1. Each war program record has Program Indicator 'W'. If the Program Development Code on the program select record is blank or W, the system builds war data for SIRS. Although D200F has 60 months of war program, only the 12 months that correspond to the extended year in SIRS are extracted for the AAM MDS data.

5.3.2. D200F maintains program records by calendar year. The war months apply to the extended year (EY) in the D200N Recoverable Item Stratification. The EY is determined by the Program Calendar Quarter (see paragraph **5.2.4.**) as explained in the examples below.

5.3.2.1. If the Program Calendar Quarter is September 2000 or December 2000, the AY is FY 2001, the Budget year is FY 2002, and the EY is FY 2003. The war program applies to FY 2003.

5.3.2.2. If the Program Calendar Quarter is March 2001 or 30 Jun 2001, the Current Year is fiscal year (FY) 2001, the apportionment year is FY 2002, the Budget year is FY 2003, and the EY is FY 2004. The war program applies to FY 2004.

5.3.3. Only flying hours (Program Type "1") and primary inventory months (Program Type '3)' are extracted for the MDS war program. The inventory months convert to averaged primary inventory (Program Type 'A'). Only service level programs for Air Force (SVC CD 'A') are used, (i.e., the programs do not break down to the command level). The service level programs have blank Command Codes.

5.3.4. The war program records contain Program Indicator 'W' and apply to applications with Standard Program Designator Type 'A' and blank in the Standard Program Designator Subtype field.

5.4. Aircraft Availability Model (AAM).

5.4.1. The AAM in SIRS requires recoverable components to relate to aircraft mission-design-series (MDS) applications. Many components are part of aircraft end items but have SPD applications that are expressed as engines type-model-series (TMS), program element codes (PECs), or other SPD types. D200F converts Standard Program Designators that are TMSs or PECs to aircraft MDS applications based on relationships that exist in the D200F Program Select table. If a PEC is not related to an aircraft on the Program Select table, no further attempt at creating a converted record takes place. D200F converts Standard Program Designators that are not in MDS configuration and TMSs that are not related to aircraft MDS via a Program Select relationship to MDSs using a SPD to MDS table. The HQ AFMC API OPR maintains this table. All users can view it through the on-line display feature.

Chapter 6

OUTPUTS

6.1. Scope.

6.1.1. D200F includes three categories of output products: user requested ("pull"), system generated ("push"), and batch processes that create file for processing by other RMS processes. Users can view push and pull products through CA DISPATCH, and can request paper copies by executing the printing process.

6.2. CA Dispatch.

6.2.1. System generated reports are available in CA Dispatch for three calendar days. This system assigns a job number to each report using the user's next job number sequence. Users can check the status of reports they requested through the On-Line Viewing screen. Enter "SYSDATA" after "REPORT NAME:", and "DBP***" after "JOB NUMBER:", where "***" is the last three digits of the User ID. For example if the User ID is "JONESABC" the Job Number is "DBPABC." The screen displays all job numbers and places the cursor at the user's lowest job number that corresponds to a User ID.

6.2.2. A recent change to the RMS system allows users the option to specify reports to be sent to a network printer or to CA Dispatch. Whether or not the pull or push products will go to CA Dispatch again depends on how the ESs have their printer set up in D200. If their printer is set to a particular printer, then the products will automatically print on that printer. If they have it set to DISP, then the products will go to CA Dispatch. This is why it important for ESs to watch what they print and make sure they have the printer set to DISP if they are going to request a product that could potentially be very large.

6.2.3. In order to change the printer setting select: MAIN, UDV, FM, UVFK. Enter DISP for CA Dispatch or a Printer ID for a particular printer and press Enter key. The message "Update Successful" should appear, indicating this change was successful.

6.3. Management Products.

6.3.1. Management products are system generated (push) reports that help control and track application, programs, and indenture information. The reports include management control products and products associated with production management data. For more specific information on the following products, see the API Users Manual.

6.3.2. Copy Add Quarterly Report (AD200.F11FQ8A4). This report is updated quarterly and is available to the ALC Indenture Monitor through CA Dispatch. It notifies the ALC indenture monitor of NHAs that had indentures established using the "Copy/Add" feature but the ES has not assigned review dates to them.

6.3.3. Indentures Establishment (AD200.FG0FM8A0). This report is updated monthly and is pushed to the ALC Indenture Monitor and HQ AFMC API OPR through CA Dispatch. It reports and summarizes selected NHA characteristics within each ALC pseudo-division. Pseudo division is a one-position element that identifies an organization within an ALC. The data pulled for this report is taken from the NHA and Indenture tables in D200F. ALC management assigns this code.

6.3.4. Indentures Establishment - AFMC Summary (AD200.FG0FM8AA). This report is updated monthly and is pushed to the HQ AFMC API OPR through CA Dispatch. It is a summary of the aforementioned Indentures Establishment report.

6.3.5. Selected Items for Review - Summary (AD200.FS1FQ8D3). This report is automatically produced after the quarterly file from the repair management system is processed. It is available to the HQ AFMC API OPR and ALC Indenture Monitor through CA Dispatch. It summarizes assemblies in each ALC Division that have not been reviewed over the past twelve months.

6.3.6. NHA Management Report (AD200.FI0FW8A2). This report is produced weekly and available through CA Dispatch to the HQ AFMC Indenture OPR and ALC Indenture Monitor. It lists transaction activity at each ALC, describing user activity in maintaining physical relationship data.

6.3.7. D220 Error Report (AD200.FK0FA8C0). D200F produces this report after it processes the D220 interface and makes it available to the Equipment Specialist (ES) through CA Dispatch. This report identifies inconsistencies within the D220 input. D200F rejects the entire file if the data rejection percent set by the RMS Administration and Support subsystem is exceeded. The ES must review this report and correct any discrepancies.

6.3.8. DID 81221A INPUT RECAP (AD200.F88FA861) -- This 5-part report is generated upon processing of Next Higher Assembly and component data from the 81221A system. The first page of the report provides a summary of statistics collected during processing of the data. The second part of the report contains the input record image of each error record on the left and up to 6 errors found in that error record on the right. The second part of the report lists the new valid Next Higher Assemblies that were added to the Next Higher Assembly database during processing. The third part of the report lists NHA part number/cages on the input. The fourth part of the report lists NHA part number/cages on the input and the more preferred part number/cage each was converted to before being added to the Next Higher Assembly and/or Indenture databases. The fifth part of the report lists the disposition of all the input records including those in error, and those that were added to or modified on the Next Higher Assembly and Indenture databases. This fifth part of the report contains the input record image on the left and up to 6 error messages, if applicable, describing the disposition of the input record on the right. Records with no disposition messages were processed as valid data.

6.3.9. DID 81220A INPUT RECAP (AD200.F88FA860) -- This 5-part report is generated upon processing of repair experience history data from the 81220A system. The first page of the report provides a summary of statistics collected during processing of the data. The second part of the report contains the input record image of each error record on the left and up to 6 errors found in that error record on the right. The third part of the report lists NHA part number/cages on the input and the more preferred part number/cage each was converted to before being added to the Next Higher Assembly and/or Indenture databases. The fourth part of the report lists component part number/cages on the input and the more preferred part number/cage each was converted to before being added to the Next Higher Assembly and/or Indenture databases. The fifth part of the report lists the disposition of all the input records including those in error, those that were summarized due to duplicate keys, and those that were posted to the Production History, Consumption History, NHA, and Indenture data bases. This fifth part of the report contains the input record image on the left and up to 8 messages describing the disposition of the input record on the right.

6.3.10. Repair Requirements Error Report (AD200.FR2FQ8E0). D200F produces this report when it identifies errors in the quarterly D075 input files from the pilot ALC. It is available to the HQ AFMC

API OPR and ALC Indenture Monitor through CA Dispatch. This report displays any item that is not identified as a NHA in D200F during D075 processing. The applicable OPR should contact the submitting activity for corrections of errors and discrepancies. D200F rejects the entire file if the data rejection percent set by the RMS Administration and Support subsystem is exceeded.

6.3.11. ESD Interface Error Report (AD200.FR0FY8E0). D200F produces this quarterly report off of an interface file from the Standard Automated Materiel Management System (SAMMS) This report is available to the HQ AFMC API OPR through CA Dispatch. The process accepts Electrostatic-Electromagnetic Sensitive Devices (ESD) data and determines if the National Codification Bureau Code and Serial Number of the input matches an Item Identification Number (IIN) in the RMS database. The applicable OPR should contact the submitting activity for corrections of errors and discrepancies. D200F rejects the entire file if the data rejection percent set by the RMS Administration and Support subsystem is exceeded.

6.3.12. Incomplete Indenture Chain Report (AD200.FJ0FA8B9). D200F produces this quarterly report after the final quarterly D200A recoverable item computation. This report is available to the ALC Indenture Monitor through CA Dispatch who then forwards it on to the ES in accordance with the API User's Manual. This report compares physical relationships to program selection relationships and helps identify inconsistencies. The applicable ES should review these inconsistencies and adjust the indenture or program selection records. If the report indicates that an SPD is not identified as a NHA, the ES should take action to establish a new SPD or change the program selection record.

6.3.13. Selected Items for Review (AD200.FS0FQ8D3). This product generates quarterly from the ALC repair schedule and is available through CA Dispatch to the Equipment Specialist (ES). It displays all recoverable items that compute a repair requirement but have no NHA review within the previous twelve months. The ES should review the NHA and insure that all component relationships are current, and the QPA and application percent for each relationship. The ES updates the Review Date element on the indenture maintenance screen.

6.3.14. Review Update Suspense Notice (AD200.F20FA8A2). This product generates weekly from the Q302 Bill of Material (BOM) requests and is available through CA Dispatch to the ES (See para **6.2.2.** and **6.2.3.** for printer information). This product notifies the ES of a request for a list of the components needed to repair a NHA. Components appear on this report because the specified NHA was in the database, but the components were not. This results in the generation of an incomplete relationship. This report is provided to advise the ES managing the NHA that the components appearing on the report have been added to the database. The ES will review and update D200F with correct component data, or delete the components. The components remain in the system until the ES either deletes them, or adds or changes the information to complete the relationship in the system. This notice continues to generate weekly until the ES completes review by entering a date in Review Date field on the indentures maintenance screen (navigation: FOE FM AI IND – see **Chapter 9**). The system also produces a Full Range List (FRL) and Repair Experience Analysis (REA) unless the NHA has an exempt code, or the assembly is not identified as a NHA.

6.3.15. New NHAs and Related Components (AD200.F30FA8A3). This product generates quarterly when production of a NHA that is not identified as a NHA in D200F is reported. It is available through CA Dispatch to the ES. The report includes the NHA that was produced and a list of components that were consumed. The ES must review this report and take necessary actions to add the indentures or reconcile the existing indentures with the production reporting. Manual indenture establishment is required because the RMS database does not retain the report information.

6.3.16. New Components for Existing NHAs Report (AD200.F40FA8A4). This product generates quarterly when maintenance systems report component consumption during the repair of a NHA, and there is no relationship of that component to the NHA in D200F. This report is available through CA Dispatch to the ES. The purpose of this report is to advise the managing ES of the NHA that the components appearing on the report have been added to the indenture record. The ES should review this report and verify that new indentures are valid, or reconcile the existing indentures with the production reporting. The ES must either manually complete the record or delete it. The ES may need to coordinate with the maintenance activity to verify indenture data and to prevent re-establishment of deleted component records.

6.3.17. Component Items for Review - Action (AD200.F50FQ8A3). This product generates quarterly and is available through CA Dispatch to the ES. It contains all "incomplete relationships" as of the date that the report is generated. All components in this report have previously appeared on the New Components for Existing NHA's report (see above). This report reminds the ES of an invalid condition that must be either verified or deleted. The ES must complete the actions identified in the preceding paragraph, if they have not already been accomplished.

6.3.18. Full Range List (FRL) (AD200.F70FA8A7). The report includes all components indentured to a NHA, including component parts, tools and test equipment, bulk materials and technical orders established by the ES responsible for the NHA. The sequence of the report is indenture level, by part number sequence. The FRL is also available as a pull product.

6.3.19. FRL Reason Codes. Each FRL displays one of the following codes that indicate what caused it to be generated:

6.3.19.1. A – Q302 generated an input file requesting a Bill of Material for the NHA listed on the report. When a FRL is produced for this reason the ES should review FRL and REA to insure that indentures are valid. Inaccurate indenture reporting could cause the maintenance activity to order the wrong parts.

6.3.19.2. B - the NHA identity has been deleted. This usually indicates a configuration change and the ES should verify that the indentures reflect the change.

6.3.19.3. C - Item management responsibility for the assembly has transferred to another activity. The ES should validate the indentures since some or all stock listed components of the assembly may also transfer.

6.3.19.4. D - The report pertains to a component or assembly that is always repaired concurrently with its NHA. The ES should verify the components associated data to insure that the repair program properly flows from the NHA to the components.

6.3.19.5. If the FRL generates from a BOM request from Q302, the report reflects all levels of indenture. If the report is generated for any other reason, the report contains only the first level of indentured components.

6.3.20. Repair Experience Analysis (REA) (AD200.F60FA8A6). The system produces an REA in response to an interactive user request, or as a result of processing the Q302 interface request for Bill of Material (BOM). The report indicates the reason for producing the output. If the reason was a user interactive request, the product shows REA Reason Code A. If the reason was a Bill of Material request from the Q302 database, the product shows REA Reason Code B. The report displays a repair

item, its production history, and all components with consumption history under that production item. It lists the same components as the Indenture Structure – Top-Down (see paragraph **6.4.6.**).

6.3.21. NHA Review Reports. D200F produces these reports on the first day of each month for distribution to the HQ AFMC API OPR and ALC Indenture OPRs. It provides review statistics of several categories of Next Higher Assemblies (NHAs). These categories include stock listed NHAs, non-stock-listed NHAs, NHAs with and without exemption codes, NHAs that are also standard designators, and breakout by ERRC code. An assembly is considered "reviewed" if the Review Date field on the Indenture screen is populated with a valid date. The review statistics include the number of assemblies reviewed and the percentage reviewed within each category. The report has three parts:

6.3.21.1. NHA Review Report, AFMC Summary (AD200.FR2FM8G1) reports review statistics by ALC and provides a command summary.

6.3.21.2. NHA Review Report, ALC Summary (AD200.FR1FM8G1) reports review statistics by psuedo-division within each ALC and provides an ALC summary.

6.3.21.3. NHA Review Report, Division Summary (AD200.FR0FM8G1) reports review statistics by ES code within each ALC pseudo-division and provides a division summary. The ES can also receive this report.

6.3.22. Q302 Repair History Error Report (AD200.F12FA8D#). This 2-part error report is generated upon processing of repair experience history data from the Q302 system. Q302 data is generated at each ALC. The "#" sign shown here in the last position of the product number is replaced on the actual hard copy report with the respective ALC code (1 = OC-ALC, 2 = OO-ALC, 5 = WR-ALC.) whose data is being reported. The first page of the report provides reference information on the various RECORD FORMATS (Columns, Field Name, Field Type, and Field Length) to be edited on the report. The second part of the report lists the actual records in error. The error report is routed to CA Dispatch where it can be viewed and/or printed by the ALC Indenture Monitor. Records in error are listed on this report when NHAs and Components do not match existing Standard Designator, Item, or Reference Designator/IIN Cross Reference data base files, Production or Consumption history quantities are zero, or Unit of issue codes cannot be converted. When standard designators (NHA's) are rejected, the Reference Designator table should be updated via menu selection FOE FM PRGM DESC and the transactions reprocessed. The Surveillance Programmer must then be contacted to run the Q302 recycle process. When the number of errors in the input file exceeds the specified error limit, the file is rejected and this error report is produced. When the number of errors is within the specified error limit, records having valid data are posted to the database. Records in error are printed on this report.

6.3.23. Recycle Q302 Repair History (AD200.F12FA8L@). This 2-part error report is generated upon processing the recycled transaction repair experience history data from the Q302 system. The "@" sign shown here in the last position of the product number is replaced on the actual hard copy report with the respective ALC code (H = OC-ALC, G = OO-ALC, L = WR – ALC) whose data is being reported. The first page of the report provides reference information on the various RECORD FORMATS (Columns, Field Name, Field Type, and Field Length) to be edited on the report. The second part of the report lists the actual records in error. The error report is routed to CA Dispatch where it can be viewed and/or printed by the ALC Indenture Monitor. Records in error are listed on this report when NHAs and Components do not match existing Standard Designator, Item, or Reference Designator/IIN Cross Reference data base files, Production or Consumption history quantities are

zero, or Unit of issue codes cannot be converted. When standard designators (NHA's) are rejected, the Reference Designator table should be updated via menu selection FOE FM PRGM DESC and the transactions reprocessed. The Surveillance Programmer must then be contacted to run the Q302 recycle process. This cycle of running the data through to determine errors, correcting the errors, and reprocessing the corrected data continues until no more errors are detected. When the number of errors in the input file exceeds the specified error limit, the file is rejected and this error report is produced. When the number of errors is within the specified error limit, records having valid data are posted to the database. Records in error are printed on this report.

6.3.24. G009 Repair History Error Report (AD200.F12FA8F#). This 2-part error report is generated upon processing of repair experience history data from the G009 system. G009 data is generated at each ALC. The "#" sign shown here in the last position of the product number is replaced on the actual hard copy report with the respective ALC code (1 = OC-ALC, 2 = OO-ALC, 5 = WR-ALC.) whose data is being reported. The first page of the report provides reference information on the various RECORD FORMATS (Columns, Field Name, Field Type, and Field Length) to be edited on the report. The second part of the report lists the actual records in error. The error report is routed to CA Dispatch where it can be viewed and/or printed by the ALC Indenture Monitor. Records in error are listed on this report when NHAs and Components do not match existing Standard Designator, Item, or Reference Designator/IIN Cross Reference data base files, Production or Consumption history quantities are zero, or Unit of issue codes cannot be converted. When standard designators (NHA's) are rejected, the Reference Designator table should be updated via menu selection FOE FM PRGM DESC and the transactions reprocessed. The Surveillance Programmer must then be contacted to then run the G009 recycle process. When the number of errors in the input file exceeds the specified error limit, the file is rejected and this error report is produced. When the number of errors is within the specified error limit, records having valid data are posted to the database. Records in error are printed on this report.

6.3.25. Recycle G009 Repair History (AD200.F12FA8N@). This 2-part error report is generated upon processing the recycled transaction repair experience history data from the G009 system. The "@" sign shown here in the last position of the product number is replaced on the actual hard copy report with the respective ALC code (H = OC-ALC, G = OO-ALC, L = WR – ALC) whose data is being reported. The first page of the report provides reference information on the various RECORD FORMATS (Columns, Field Name, Field Type, and Field Length) to be edited on the report. The second part of the report lists the actual records in error. The error report is routed to CA Dispatch where it can be viewed and/or printed by the ALC Indenture Monitor. Records in error are listed on this report when NHAs and Components do not match existing Standard Designator, Item, or Reference Designator/IIN Cross Reference data base files, Production or Consumption history quantities are zero, or Unit of issue codes cannot be converted. When standard designators (NHA's) are rejected, the Reference Designator table should be updated via menu selection FOE FM PRGM DESC and the transactions reprocessed. The Surveillance Programmer must then be contacted to run the G009 recycle process. This cycle of running the data through to determine errors, correcting the errors, and reprocessing the corrected data continues until no more errors are detected. When the number of errors in the input file exceeds the specified error limit, the file is rejected and this error report is produced. When the number of errors is within the specified error limit, records having valid data are posted to the database. Records in error are printed on this report.

6.3.26. Selected Items for Review Summary (AD200.FS1FQ8D3). This report is automatically generated as a result of the processing of the D075 consolidated file received quarterly from the pilot

ALC. It summarizes item level information for each ALC/Division that has not been reviewed within the last twelve months from the beginning date. It is a summary of the information in the report described above in paragraph **6.3.13.**

6.3.27. NHAs with Indenture Suppress Indicator On (AD200.F84FM8M@). The HQ API OPR receives this report on a monthly basis for all NHAs belonging to Headquarters. Each ALC Indenture Monitor receives this report for the NHAs belonging to that ALC. The @ identifies the ALC (H = OC-ALC, G = OO-ALC, L = WR – ALC) for the report. NHAs appear on this report when they meet the following conditions:

6.3.27.1. The Indenture Suppress Indicator equals 'Y'.

6.3.27.2. The Review Date is older than 1 year ago.

6.3.27.3. Those NHAs having a Review Date older than 18 months ago will have their Indenture Suppress Indicator reset to space during the extraction for this report. The report will indicate that the indicator has been reset. The report will also indicate that the Suppress Indicators of those NHAs having a Review Date between 17 and 18 months ago are about to expire.

6.3.28. The following 4 reports are created as a result of installing the Program Authority (PA) data, which contains a majority of the Aircraft Organizational Intermediate Maintenance Projected Peace Program data for D200. These reports are provided for the HQ AFMC PROGRAMS OPR.

6.3.28.1. Missing USAF AF-MDS Program Report (AD200.FN0FA8A4). This report lists PA records that fail one of four edits. The four edits are 1) PA records missing data for the Flying Hour Retention Computation (identified on the report as "Missing Utilization Rate" records), 2) PA records containing an SPD that was not validated by the standard index or the actual to standard table (identified on the report as "Invalid SPD" records), 3) PA records identified as duplicate records when attempting to add them to the data base (identified on the report by the "Duplicate Record" message), and 4) If there is no match to the SPD being processed, the record is printed on the report with the message, "Missing STD-DESIG-RCD".

6.3.28.2. USAF AF-MDS Program Report (AD200.FO0FA8A5). This report contains all valid SPDs that were found on the standard index or were converted from the actual to standard table. It is produced in two parts and contains nine years, by quarter, of program data. Only program types 1, 2, 3, 5, E, S, T, V, and Z records are provided on this report. Part one of the report is summarized by MDS, Program Type, Command Code, and Assignment Code. All aircraft with the same MD must appear together. Part two, entitled "Overall Totals of Edited Flying Hour Records", is summarized to the Program type, command and assignment code. A grand total is also produced for all MDs by command code and assignment code.

6.3.28.3. Program Authority Tape Error Report (AD200.FR0FA8E1). This report is comprised of all records from the PA file that fail to meet the system's editing criteria. The data is rejected if the rejection percent exceeds the specified percent.

6.3.28.4. Program Authority Variance Report (AD200.FP0FA8A6). This report compares two types of programs, peacetime flying hours (FH) and average total active inventory (TAI), from one Program Authority (PA) document to the next. The report compares the TAI data in the fourth quarter of each fiscal year (FY XXXX/09) in the latest PA document with the data in the corresponding quarter of the most recent previous PA file. It also compares each entire fiscal year's FH data in the latest PA document with the corresponding fiscal year's FH in the most recent previous

report. The report displays the differences in program units and percents between the data in the latest and most recent previous PA files. The data includes the current fiscal year and ten years of projected data. The program data is displayed separately and broken out by Air Force component within each aircraft Mission-Design-Series (MDS) or modified MDS, if applicable. Summaries of all MDSs to Mission-Design (MD), all MDs to mission), and all aircraft to a global summary are provided. Each summary is broken out by Air Force Component. There is no summary of modified MDS designators to MDS.

6.3.29. G099 Error Report (AD200.FR1FA8E1) -- This report is generated automatically as a result of the monthly processing of the G099 interface and is received by the HQ AFMC API OPR. The G099 interface contains past program data of aircraft flying hours, inventory, and sorties and trainer past actual programs for trainer flying hours and inventory. The data is rejected if the rejection percent exceeds the specified percent. This error report shows the reason rejected, record rejected, total records read, and total records rejected.

6.3.30. Mod Schedule reports (D363). The following 3 reports are created on a monthly basis as the result of installing Mod Schedule data from D363 and are provided for the HQ AFMC PROGRAMS OPR. The first report includes the results of the editing of the D363 input data. The last 2 are produced as a result of installing the Mod Schedule data on the Mod Schedule database.

6.3.30.1. Mod Schedule Data Exception Report (AD200.FR0FA8E0). When all input files from the ALCs have been received, the fields are validated against the Data Element Dictionary. Records, which do not pass the validation criteria, are listed on this error report. If the ratio of the number of records in error to the total number of records on the input files exceeds the specified error limitation, the files are rejected. In this case, no data is retained for further processing.

6.3.30.2. Unmatched Tailored Application Master Report (AD200.FU0FA8D8). This report is produced as a result of a user request for the INSTALL MOD SCHED process. Information on this report includes the Modification SPDs that do not have a corresponding SPD on the SPD file, SPD MOD file, or Reference Designator file. It also lists those Modification SPDs that cannot be added to the database, i.e., the Modification data that is entered by Mission/Design without a Series (the 7th position of the MDS is a blank).

6.3.30.3. Tailored Application Master Report (AD200.FU1FA8D8). This report is produced as a result of a user request for the INSTALL MOD SCHED process. The process uses the valid SPD/MOD (MDS, Remove/Install indicator, Mod Number) in each Modification record to update the SPD MOD file. The data on the report includes all modification information from the MOD SCHED file.

6.4. User Requested Products.

6.4.1. User requested (pull) products help users control and track data in the D200F applications, programs, and indentures. Users select these products through the Output Products, Application/Indentures screen or the Output Products, Programs screen. The system does not reject duplicate requests for the same product, therefore, requesters should track their request to preclude generating several copies of the same report. All output products are available to the user through CA Dispatch (See paragraph **6.2.2.** and **6.2.3.** for printer information). Be cautious when requesting printed products since some, especially full range lists (paragraph **6.3.18.** above) can be very large.

6.4.2. Component Item Review List (CIRL) (AD200.FB0FA8B1). This report lists all next level higher assembly (NHA) identities for a specified component. It is useful in locating NHAs affected by defective component item reports (e.g., GIDEP Alert) or by diminishing manufacturing sources. This product is available by component NIIN or by part number-FSCM combination and is sorted in NHA NIIN sequence.

6.4.3. Full Range List Report (FRL) (AD200.F70FA8A7). See **paragraph 6.3.18.**

6.4.4. Indenture Chains (IC) - All (AD200.FE0FA8B4). This report is a list of all indenture chains that exist for a specified component. The bottom of the chain is the specified component; the top of the chain is the highest indentured assembly. Requesters specify the NIIN, Part Number-FSCM combination, or engine Type, Model, Series (TMS). If a component item is a link in multiple chains, each chain is listed on a separate page.

6.4.5. Incomplete Indenture Chain (IIC) (AD200.FJ0FA8B9). This report lists Standard Program Designator (SPD) applications that have component NIINs or TMSs. This report is used to compare physical relationships with the program selection relationships and to help identify inconsistencies. Only the HQ AFMC API OPR can request this report.

6.4.6. Indenture Structure Top-Down (IS) (AD200.FD0FA8B3). This report lists the specified NHA and its components from top to bottom. It is similar to the Full Range List Report (see paragraph **6.3.18.** above), except components with Special Identification Designator (SID) "D", "E", "F", "G", "L", "R", "S", or "T"(see **Chapter 2**) do not appear. User may choose to view all components or limit the request to components with ERRC Code "C", "P', "S" and "T". To request this report, specify a NHA by entering a NIIN, Standard Program Designator, or part number-FSCM combination.

6.4.7. Material Requirements List (MRL) (AD200.F90FA8A9). The MRL lists all the components of a NHA and the quantity needed to repair that NHA. The last section of this report displays investment and expense cost information. The user may include all components or limit the request to recoverable items only. This report is required to support contract maintenance. The user may also request a Bulk Material List (BML) with this report if desired (see **paragraph 6.4.8.**). To be included in this report, components must meet all the following criteria:

6.4.7.1. A component must have a NIIN, or have a source code (the first two positions of the Source, Maintenance, Recoverability code) of AD or MD.

6.4.7.2. Items must have a computed replacement percent greater than zero.

6.4.7.3. Items must have Special Identification Designator (SID) other than D, E, F, G, L, R or T. Blank is valid.

6.4.8. Bulk Materials List (BML) (AD200.F80FA8A8). Users request this report with the Material Requirements List (MRL) (see **6.4.7.**). It is not available as a separate report. It contains all the components of a specified NHA with a Special Identification Designator (SID) "L", which identifies an item as bulk material.

6.4.9. Next Higher Assembly By ES (NBES) (AD200.FF0FA8B5). This report provides a list of every NHA in D200F that is assigned to a given ES code within each ALC pseudo division. It includes exemption codes and review dates. This provides an overview of all review dates and exempt coded items for each ES. This report may be sorted by NIIN or by part number.

6.4.10. Purchase Request Support List (PRSL) (AD200.FC0FA8B2). This product displays physical relationship information for NHAs identified on repair Purchase Requests (PR) or Military Interservice Purchase Requests (MIPR) that the requesting Production Management Specialist (PMS) is reviewing. This product helps the PMS identify components needed to support contract maintenance, and that may be candidates for Government Furnished Material (GFM). Although the D034A interface was removed from D200F, the PRSL report can still be requested via the online screen. The PRSL allows the user to screen multi-item repair PRs or MIPRs on a single report. The user may choose to view all components or limit the request to recoverable items.

6.4.10.1. The PRSL has three parts:

6.4.10.1.1. Part I lists the items to be included in the PR or MIPR (exempt items are noted)

6.4.10.1.2. Part II lists the required component parts and their required quantities for repair

6.4.10.1.3. Part III sums repair costs for the components

6.4.10.2. Components for this report must meet all the following criteria:

6.4.10.2.1. Items must have an NIIN assigned, or have a source code (the first two positions of the Source, Maintenance, Recoverability code) of ‘AD’ or ‘MD’.

6.4.10.2.2. Items must have a computed replacement percent greater than zero.

6.4.10.2.3. Items must have Special Identification Designator (SID) other than ‘D’, ‘E’, ‘F’, ‘G’, ‘L’, ‘R’ or ‘T’. Blank is valid.

6.4.11. Repair Experience Analysis (REA) (AD200.F60FA8A6). This report lists an item with its production history and all components that have consumption history for that item. It lists the same components as the Indenture Structure – Top-Down (see **paragraph 6.4.6.**). This report also automatically generates when a Q302 Bill of Material is requested. Reason code A or B appears at the top of the screen indicating whether report was user requested (A) or system generated (B). Users can request REAs for all next higher assemblies assigned to a specific equipment specialist in a single request. This option should not be used indiscriminately, however, since the output can involve a large volume of paper. This output is a hard copy product for the equipment specialist of the next higher assembly identity.

6.4.12. ESD Identification (RESD) (AD200.FQ0FA8D2). This report displays all components that have an Electromagnetic-Electrostatic Sensitive Device (ESD) designator. This report is available to the ALC Indenture Monitor/OPR.

6.4.13. Indenture Chain Specified NHA (RICS) (AD200.FT0FA8D7). This report lists all indenture chains between the user-specified NHA and the component. It provides the user with a starting and ending point within the indenture chain. Multiple chains are listed on separate pages.

6.4.14. Special Identification Designator (RSID) (AD200.FQ2FA8D6). This report includes all components of a specified end item or NHA that are assigned a specific SID. The report includes all levels of components below the NHA. Users may use this report, for example, to identify all incomplete indenture relationships (SID "V") of a NHA. The list is sorted by part number and may be requested by NIIN, STD DES or part number-FSCM combination, specifying the desired SID code. (See **Chapter 2** for SID code definitions).

6.4.15. Exempt Code (RXMT) (AD200.FQ1A8D5). This report displays all NHAs that have a given exempt code within an ALC, Division, or ES. See **Chapter 2** for Exempt code definitions.

6.4.16. Tools and Test Equipment (TTE) (AD200.FA0FA8B0). This report identifies and describes tools and test equipment used to repair a NHA. The user may choose to view all levels of components by leaving the "RECOVERABLES ONLY" field blank. Entering a "Y" in this field produces all levels of components to the point in each chain where a reparable component (ERRC Code C, T, S, U or standard designator, i.e., MDS or TMS) is noted.

6.4.17. The Request Reclamation Data (RECL) report is no longer available in the format that was used in the past. The Request for Reclamation Data is now available via a flat file containing error records and another file containing reclamation data. No report is produced.

6.4.18. AFMC Program Report (RFPL) (AD200.FL0FA8A2 for future, AD200.FK0FA8A1 for past). This report displays in quarterly increments all program data. Data are broken down to MDS and command levels. Users must specify whether the request is for past or future data. Users can request a report that includes all program data , specify a single program type, or select an option that includes only the program types used in AFMC requirements processes (types 1, 2, 3, and 5).

6.4.19. Past Program Change Report (RPCR) (AD200.FP0FA8D1). This report lists all current cycle past programs that have been changed since setting the change indicators to blank. The most recent past quarter is always included regardless of change status. Current quarter past actual data is not used for this report. The most recent quarter of past actual data is summed to quarter data for this report. All 3 monthly quantities are included regardless of the value of their change indicators. Program data may not have been complete in the previous quarter due to incomplete reporting at the end of the quarter (see **Chapter 3**).

6.4.20. Tailored Mod Report (RTMR) (AD200.FU2FA8D8). This report displays time-phased data for each modification SPD. It includes 8 past quarters, 25 future peace quarters, 1 retention quantity, and 4 future war quantities of the EY (WAR) year of modification schedules as stored on the Mod Schedules database table. Standard Program Designator (SPDL) (AD200.F00FA8A1). This report lists all valid SPDs in the SPD Table. Users can limit the report to a single SPD type.

6.4.21. NHAS WITH INDENTURE SUPPRESS INDICATOR ON (AD200.F84FM8Q0). This report is output as a result of a user request. NHAs appear on this report when they meet the following conditions:

6.4.21.1. The Indenture Suppress Indicator equals ‘Y’.

6.4.21.2. The Review Date is within the requested range or within the default range.

6.4.21.3. The ALC matches the ALC in the selection criteria.

6.4.21.4. If specified, the DIV and Es match those selected by the requestor.

The report will indicate that the Indenture Suppress Indicator of those NHAs having a Review Date older than 18 months ago will be reset to space during the execution of the next monthly report. The report will also identify those NHAs having a Review Date between 17 and 18 months ago. The sequence of this report is ALC, DIV, ES, Review Year, Review Day, and Item Type. The report is further sequenced by Part Number/Cage within the type ‘NSL’, by NIIN within the type ‘NSN’ and by Standard Designator within the type ‘SPD’. A blank line occurs between each group of NHAs for an ES code. There are page breaks for each Division within the ALC and a

summary page at the end of the records for each ALC. The ALC summary page lists the number of records for each division within the ALC and a total for the ALC.

6.5. Batch Jobs.

6.5.1. Authorized users can launch through Output Products function the batch jobs in the following paragraphs that provide data to other systems or to other RMS processes.

6.5.2. Install Modification Schedule (IMOD). This screen allows the user to initiate the monthly install process of updated data to the Modification Schedule Table. The process also produces two monthly reports (see paragraphs **6.3.30.2.** and **6.3.30.3.**).

6.5.3. Past Engine and PEC Computation (RPEC). This process performs the computation of past engine and PEC programs whenever a user requests one. The job computes engine flying hour or sortie programs considering the engines' TMS applications, the QPAs, and application percents. The job computes PEC programs considering the application percent of PEC to aircraft and the aircraft program data. These engine and PEC programs are passed to D200A during the Snapshot Process.

6.5.4. Projected Engine and PEC Computation (RPRC). This process performs the computation of projected engine and PEC programs whenever a user requests one. The job computes engine flying hour or sortie programs considering the engines' TMS applications, the QPAs, and application percents. The job computes PEC programs considering the application percent of PEC to aircraft and the aircraft program data. These engine and PEC programs are passed to D200A during the Snapshot Process.

6.5.5. Mod Program Computation (RMPC). This job builds Mod Programs for the modifications having schedules on the Mod Schedule table. It computes averaged running totals from the schedules and, using the Total Active Inventory (TAI) program (type “T”) for the MDS being modified from the D200F program time-phased tables and these averaged running totals, develops application percents. These application percents are then applied to the flying hour and inventory programs for the MDS being modified to develop flying hour and inventory program data for the Modifications. These Modification programs are passed to D200A during the Snapshot Process.

Chapter 7

CONTRACTOR SUBMISSION

7.1. Background.

7.1.1. Contracting actions are important sources of indenture data in D200F. In the early phases of weapon system deployment, contractors may perform maintenance and materiel management functions, including provisioning tasks and preparation of technical data.

7.1.2. Two Data Item Descriptions (DID) are available for contractors to use to populate the D200F system with indenture data. DID DI-ILSS-81221A, Applications, Programs, and Indenture (API) Data provides initial indenture data in the initial procurement package or in a follow-on contract action. Since some systems did not include initial indenture data with the initial procurement packages, it is necessary to either acquire or build these data, whichever is the most economical.

7.1.3. Repair history data may be acquired in the initial procurement package or in a follow-on contract action by tasking the contractor to submit production and consumption history data using DID DI-ILSS-81220A, End Item (EI) Production and Component Item (CI) Consumption History Data.

7.2. Data Submission.

7.2.1. The contractor will submit data in an electronic medium (disk or tape using ASCII-64 character set, or file transfer protocol), as specified in the DID, and a hard copy of the contents. The repair history will be updated at least once during the contract period and at the completion of the contract, but not more frequently than once a quarter.

7.3. Acquisition Process Responsibilities.

7.3.1. Acquisition programs can range from a small modification to a major weapon system. The equipment specialist (ES) responsibilities during the acquisition process vary with the size of the program. AFMC Instruction 23-104, *Functions and Responsibilities of the Equipment Specialist During Provisioning* details these responsibilities.

7.4. Data Review Responsibilities.

7.4.1. The program manager, production management specialist, or equipment specialist for the end item:

7.4.1.1. Reviews data received from contractors for proper format, accuracy, and validity.

7.4.1.2. Forwards the data to the ALC Indenture Monitor, who inputs them to the D200F system.

7.4.1.3. Returns unacceptable data to the contractor through appropriate channels for corrective action.

7.4.2. If the data requires only minor corrections, the PM, PMS, ES may decide to correct the input themselves rather than returning it to the contractor. The decision to return data to the contractor depends on the volume of missing or incorrect data.

7.4.3. Data will not be input to D200F until they have been reviewed and corrected.

7.5. Procuring Activity Responsibilities.

7.5.1. The procuring activity that uses a DID to acquire indenture data will supply the following information so the contractor can prepare data for the DID:

7.5.1.1. The alpha/numeric single digit ALC code. See the formats in **Table 7.1.** or **Table 7.3.** for valid values.

7.5.1.2. An alpha/numeric single digit division/pseudo division code. The ALC assigns this code.

7.5.1.3. An alpha/numeric two digit ES code. The ALC assigns this code.

7.6. Contractor Material Management Support.

7.6.1. In some cases a support contractor performs materiel management tasks on behalf of the government. There are two types of contractual arrangements of this kind: Interim Supply Support (ISS) and Contractor Logistics Support (CLS). Under ISS a contractor performs acts as an inventory control point (ICP) for peculiar items that support a new system or subsystem. Under ICS arrangements the contractor performs ICP functions for a mature system. These support functions include repair production management and technical management. In these cases the program office must insure that the data are included as part of the transition package when the government assumes the materiel management functions.

7.7. Initial Indentures.

7.7.1. Indenture records are procured from the manufacturer of new end items or weapon systems using DID DI-ILSS-81221A. The decision to buy records is part of the acquisition process. These data should be an integral part of any solicitation or procurement package. The records will be provided as complete indenture files in the specified format.

7.8. Request For Proposal (RFP).

7.8.1. During RFP development, the ES will request the contract actions to insure indenture data delivery by the contractor. As part of the Logistic Support Analysis (LSA) request package, the ES will identify the D200F indenture requirement using the DID DI-ILSS-81221A, calling for LSA records as source data. This DID will be used on all acquisitions and modifications, as applicable.

7.9. Contractor Indenture Submittal.

7.9.1. The contractor's response to the DID, appended to the contract, will be in the form of an initial indenture using the format specified in DID DI-ILSS-81221A. Each contractor submittal will include a hard copy of the tape contents, which the procuring agency will use to review and validate the data.

7.10. Initial Indenture Preparation Instructions.

7.10.1. DID DI-ILSS-81221A includes preparation instructions for an initial indenture. Each contracted item requires the following data elements in the positions specified when the contractor is preparing an initial indenture. Every component item record must follow a related NHA record. This format will not be modified. However the procuring activity may specify default values for mandatory fields in the contract.

7.11. Next Higher Assembly (NHA).

7.11.1. NHA Content: Each NHA record must be accompanied by a component item record. The following data elements are mandatory for each NHA item in the positions specified. See **Table 7.1.**

Table 7.1. NHA Record Format, Indenture Record.

Position	Element Title	Definition/Instructions (160 position format)
1	Action code	1 for initial establishment. 2 to change an existing record. 3 to delete an existing record.
2	ALC code	MANDATORY ENTRY Use the alpha ALC code that has management responsibility for the NHA, or the code indicating a contractor management activity. The codes are: G = Ogden ALC H = Oklahoma City ALC L = Warner Robins ALC
3	Division Designator	MANDATORY ENTRY Use the code assigned to the division that has management responsibility of the NHA. To be furnished by the procuring agency.
4-5	Equipment Specialist (ES)	MANDATORY ENTRY Enter the two-position code for the ES who has management responsibility of the NHA. Furnished by the procuring agency.
6-37	Part Number	Use the part number. See DOD 4100.39M for guidance on use of special characters. Not required if the NHA is a MDS or TMS and entered in positions 43-57.
38-42	Commercial and Government Entity (CAGE) Code	Not required if the NHA is a MDS or TMS and entered in positions 43-57.
43-57	Mission Design Series (MDS) Type Model Series (TMS) designator	When a MDS or TMS is entered in these positions, no entry is required in positions 6-42 or in positions 77-81.
58-76	NHA Name	MANDATORY ENTRY for TOA 1. Use the appropriate NHA noun. See Federal Cataloging Handbook H6-1.
77-81	Source Maintenance and Recoverability (SMR) Code	MANDATORY ENTRY for TOA 1. Use the SMR code assigned to the NHA item. See T.O. 00-25-195. Not required if end item is a MDS or TMS and entered in position 43-57
82-160	Blank	

7.11.2. Component Item (CI) Content: Each component item record must be proceeded by a related NHA record. When submitting components for an initial indenture, each component item requires the following data elements in the positions specified. Item with either known or anticipated removals and replacements during the repair of a NHA item should have a replacement percent. See **Table 7.2.**

Table 7.2. Component Record Format, Indenture Record.

Position	Element Title	Definition/Instructions (160 position format)
1	TOA code	MANDATORY ENTRY "6" for initial establishment. "7" for changing an existing record. "8" to delete a C/I record.
2-5		Blank.
6-37	NHA PN	Use the part number of the NHA. See DOD 4100.39M for guidance on special characters. Not required if the NHA is a MDS or TMS and entered in positions 43-57.
38-42	NHA CAGE	MANDATORY ENTRY Use the CAGE assigned to the manufacturer of the NHA part number. Not required if the NHA is a MDS or TMS and entered in positions 43-57.
43-57	MDS or TMS	Use the appropriate MDS or TMS designator if the NHA item is an aircraft, missile or engine. When the MDS or TMS is entered in positions 43-57, no entry is required in positions 6-42 (PN and CAGE).
58-76	C/I Name	MANDATORY ENTRY for TOA 6. The component item's nomenclature. See Federal Cataloging Handbook H6-1.
77-81	SMR Code	MANDATORY ENTRY Use the component item's Source, Maintenance, and Recoverability (SMR) code assigned. See T.O. 00-25-195. Entry not required if the component item is an engine Type, Mission, Series Module (TMSM) and entered in positions 125-139, or if the special identification (SID) code in position 148 is D, E, F, G, L or T.
82-87		Blank
88-119	C/I PN	MANDATORY ENTRY Use the component item's manufacturer's part number. See DOD 4100.39M for guidance on use of special characters. Not required if the component item is a TMSM and entered in positions 125-139.
120-24	C/I CAGE	Use the CAGE assigned to the component item's manufacturer. Not required if the component item is a TMSM and entered in positions 125-139.

Position	Element Title	Definition/Instructions (160 position format)
125-39	Type, Model, Series Module (TMSM)	When the component item is a TMSM, use TMSM designator. See AFM 400-1 for guidance. When the TMSM is entered in positions 125-139, no entry is required in positions 88-124 (PN and CAGE), or in positions 77-81 (SMR Code).
140-44	Quantity Per Assembly (QPA)	MANDATORY ENTRY for TOA 6. This entry indicates the quantity of each component item installed in the NHA. The field is right justified numeric, prefixed with leading zeros. Items with a SID code D E, F, G, L, R or T in position 148 shall be assigned a Q PA of 00001.
145-47	Replacement Percent (RPL %)	MANDATORY ENTRY for TOA 6. This the average rate of replacement of a component item during NHA overhaul, based on the component item's unit of issue. This field is right justified, numeric, and prefixed with leading zeros. For example, 25% is entered as 025. An entry of three zeros (000) is acceptable.
148	Special Code (SID)	Use this code, if applicable, to indicate additional information about a component. If no code applies, leave blank. Acceptable codes are: D - Special tools, field and depot E - Special tools, depot only F - Test equipment, field and depot G - Test equipment, depot only H - Variable tolerance item L - Bulk material - This code should not apply to any component item called out in the IPB portion of the TO or drawing. M - Shop manufacture item N - Specific series or configuration application item P - Serial number controlled item R - Test equipment, field only S - Repair/parts kit T - Technical order/drawing U - Selective fit V - Review W - Embedded end item not repaired separately
149-160		Blank

7.12. Repair History Reporting.

7.12.1. When the indenture is already established, end item production and component item consumption repair history records are procured from the contractor who repairs the end items, following the formats in DID DI-ILSS-81220A. These data should be an integral part of any maintenance contract package. The records will be provided on magnetic tape in the specified format.

7.13. Reporting Schedule.

7.13.1. The repair history is updated at least once during the negotiated contract and when the contract is complete, but not more frequently than once a quarter. The contractor responds according to the DID instructions.

7.14. Production and Consumption.

7.14.1. For repair history to be complete and usable in the D200F system, both end item production and component item consumption must be reported. Every component item consumption record must have a valid, related NHA record. Also, the NHA must report production history so D200F can compute replacement percents.

7.15. Repair History Preparation Instructions.

7.15.1. DID DI-ILSS-81220A includes preparation instructions. Each contracted item requires the data elements in the positions specified in **Table 7.3.** and **Table 7.4.** when the contractor is preparing repair history. Every component item record must follow a related NHA record. This specified format may not be modified.

7.16. Next Higher Assembly (NHA) Content.

7.16.1. Each NHA record must be accompanied by a component item record. See **Table 7.3.** for the data elements that are mandatory for each NHA item in the positions specified.

7.17. Component Item (CI) Content.

7.17.1. Each component item record must be preceded by a related NHA record. When Type of Action (TOA) code ”9” for end item production reporting appears in position 2, IAW **Table 7.4.** each component item record requires the following data elements in the positions where **MANDATORY ENTRY** is specified.

Table 7.3. NHA Record Format, Repair Record.

Position	Element Title	Definition (160 position format)
1	Type of Action (TOA) code	Must contain 4
2	ALC code	Enter the one-position alpha code to indicate the government or contractor activity with materiel management responsibility for the assembly. The codes for Air Force activities are: G = Ogden ALC H = Oklahoma ALC L = Warner Robins ALC P = Cryptological Support Center, Lackland AFB TX
3-5		Blank.
6-37	Part Number	MANDATORY ENTRY. Use the part number of the repaired assembly. See DOD 4100.39M for guidance on use of special characters. Used only if positions 43-57 are blank.
38-42	Contractor and Government Entity(CAGE) code	MANDATORY ENTRY when the part number is entered in positions 6-37.
43-57	Repaired assembly NSN, MDS or TMS	Use the NSN, including MMAC if applicable, MDS or TMS of the repaired assembly. Use only if positions 6-42 are blank.
58-81		Blank
82	Reversal Indicator	If too many assemblies were erroneously reported as produced in a previous report, use a minus sign (-) followed by the number of items erroneously reported.
83-87	Repaired item production	MANDATORY ENTRY. Use the quantity of assemblies produced (overhauled) during the reporting period. Prefix with zeros to fill.
88-160		Blank

Table 7.4. Component Record Format, Repair Record.

Position	Type of Action	Definition (160 position format)
1	(TOA) code	MANDATORY ENTRY. "” “9" for consumption reporting.
2	ALC code	Enter the one-position alpha code to indicate the government or contractor activity with materiel management responsibility for the assembly. The codes for Air Force activities are: G = Ogden ALC H = Oklahoma ALC L = Warner Robins ALC P = Cryptological Support Center, Lackland AFB TX
3-5		Blank.
6-37	Repaired Item Part Number	MANDATORY ENTRY. Use the part number of the repaired item. See DOD 4100.39M for guidance on use of special characters. Used only if NSN/NC/MDS/TMSM is blank in positions 43-57.
38-42	Repaired Item Commercial and Government Entity (CAGE) code	MANDATORY ENTRY when the part number is entered in positions 6-37 Use the CAGE assigned to the manufacturer of the part number.
43-57	Repaired item NSN, NC, MMAC (if applicable) MDS or TMSM	Use the NSN, NC, MMAC if MMAC assigned, MDS or TMSM of the repaired item. Use only if part number/CAGE in positions 6-42 is blank.
58-81		Blank.
82	Reversal indicator	If too many assemblies were erroneously reported as consumed in a previous report, use a minus sign (-) followed by the number of items erroneously reported.
83-87	Component item consumption	MANDATORY ENTRY. Use the quantity of items consumed during the reporting period. Prefix with zeros to fill.

Position	Type of Action	Definition (160 position format)
88-119	Component Part Number	MANDATORY ENTRY when TOA = 9. Use the part number of the component item. See DOD 4100.39M for guidance on use of special characters. Used only if NSN/NC /TMSM is blank in positions 125-139.
120-124	Component CAGE	MANDATORY ENTRY when the part number is entered in positions 88-119. Use the CAGE assigned to the manufacturer of the part number.
125-139	Component item NSN, NC, MMAC (if applicable) or TMSM	Use the NSN, NC, MMAC if MMAC assigned, or TMSM of the component item. Use only if part number/CAGE in positions 88-124 is blank.
140-160		Blank.

Chapter 8

SYSTEM INTERFACES

8.1. Input Interfaces.

8.1.1. Data Depot (Q302). This file was formerly provided by the G005M Maintenance Material Support System. The input from the Q302 Data Depot includes two interfaces:

8.1.1.1. The first is a request from the ALC maintenance organization's planning function. This interface provides indenture information needed to establish the maintenance material standards that support the depot level repair of the item identified in the request. This interface must include the following information:

Requesting Organization Symbol

NHA Identity (NSN or Mission Design Series) or NHA Part Nr/CAGE

Job Number

Requesting ALC

8.1.1.2. The second input is a file with information that portrays the results of a single quarter's repair experience at the ALC. The extract identifies the end items and quantity repaired (production), and the component items and quantity used (consumption). Extract criteria and file data content are:

Next Higher Assembly Identity or NHA Part Nr/CAGE

Component Identity or Component Part Nr/CAGE

Source of Repair

Production Quantity

Consumption Quantity

Item Code (NHA only)

Unit of Issue (Component item only)

8.1.2. Government Furnished Material Transaction Reporting System (G009). This input includes data that portrays the results of a quarter's repair experience at contract repair facilities. The extract identifies the NHA and quantities repaired (production), and the component items and quantity used (consumption). The file includes two records: one is for the NHA and component items identified by a National Stock Number; the second is for components identified by part number. These records contain the following information:

Component Identity (NSN)

Next Higher Assembly Identity (NSN)

History Data

Reversal Indicator (- for minus)

Production Quantity or Consumption Quantity

Item Code (NHA = E, CI = blank).

or

Next Higher Assembly Identity (NSN)

History Data

Reversal (- for minus)

Consumption History

Component Reference Number Log (PN)

8.1.3. AFMC Provisioning System (D220). This system is an automated source of Master Material Support Record Data, which identifies component items subject to repair. The system identifies an assembly (NHA) and its related descriptive elements, and all components with their descriptive elements. The equipment specialist requests the provisioning function at the responsible ALC for an interface with the D220 system. D220 then generates a hard copy output that identifies the recoverable items in D220 of interest to the requesting ES. The ES codes the product to indicate the components to be reported, and returns it to the provisioning function. D220 then generates an interface file that D200F can use to establish the initial relationships represented by the NHA and related components on the file.

8.1.3.1. Information required for input of the NHA file is:

NHA Reference Number Log (part number)

NHA FSCM (now CAGE)

Item Name

SMR Code

Item Code (Constant -E-)

AF Manager ALC Code

Equipment Specialist Cd

Division Designator ES

Submitting ALC Code

8.1.3.2. Information required for the Component Item is:

Component Reference Number Log

Component FSCM

Item Name

Source Maintenance Recover Code

Quantity Per Assembly

Overhaul Replacement Percent

8.1.4. Reutilization/Disposition System (RDS) D035G. The input from Reutilization Disposition System (D035G) includes 3 interfaces.

8.1.4.1. Two of these interfaces contain the stock numbered items for which D035G is requesting all direct components and all direct next higher assemblies (NHAs) as stored in the physical relationships in D200F. One of these interfaces is received on a quarterly basis; the other is received on an as required basis.

8.1.4.1.1. The input for these two interfaces contains the following element:

NIIN

8.1.4.2. The third interface comes to D200F on an as required basis and contains a request from D035G for reclamation information. This interface contains the following data elements:

Application Program Designator

Reclamation Project Code

Reclamation Project Quantity

8.1.5. Standard Automated Materiel Management System (SAMMS). The interface file from SAMMS identifies Electromagnetic and Electrostatic Sensitive Devices (ESD). D200F uses this information to produce a report that identifies next higher assemblies of ESD items that reside in the database. Input data elements are:

National Stock Number, Consisting of:

Federal Supply Class

National Codification Bureau Code

Serial Number

8.1.6. Reliability Engineering Management Information System (REMIS) (G099). HQ AFMC/EN provides this monthly interface. It contains the most recent months past program for aircraft. The interface includes Organizational Intermediate Maintenance (OIM) program. The OIM programs are Types 1 (flying hours), 5 (sorties), and 3 (equipment inventory months). The interface can also contain inventory (Type 3) or flying hour data (Type 1) for simulator trainers.

8.1.6.1. The elements sent to D200F for aircraft are:

APD (SPD)

Command Code

Assignment Code

Flying Hours

Sorties

Inventory

Year

Month

Possession Code

8.1.6.2. The elements sent to D200F for simulator trainers are:

APD (SPD)

Command Code

Flying Hours

Inventory

Year

Month

Possession Code

8.1.7. Program Authority (PA) File, Aerospace Vehicle Inventory and Flying Hours. HQ USAF/XPP provides the PA file, which includes nearly all future aircraft OIM programs. This includes flying hours, inventory, sorties, squadron months and inventory programs. Since the RMS file must retain the file contents unchanged, all of the following elements on the interface are retained in the Program Authority database. The quantities on this input are used to develop Program types E, S, T, 1, 2, 3, 4, and 5 data for D200F. Elements indicated by an asterisk (*) are displayed on the on-line system screens and on management product:

SPD*

PA Group Indicator

Active/Inactive Indicator

PA Group Identifier

Data Type

PA Cycle

Number of Data Years

Non-Zero Data Indicator

Command*

Program Element

Assignment Code

Foreign Govt Owned Indicator

Aircraft Type ID

Aircraft Engine Type ID

Mission Description

30 Sept of previous FY

36 Future Program Quantities*

8.1.8. DI-ILSS-81220A, End Item (EI) Production and Component Item (C/I) Consumption Repair History Data. The input from the DI-ILSS-81220A Contractor Reporting of Repair History provides data for overhaul or repair of Air Force equipment. The input portrays the range and usage rates of parts and materials needed to repair an item. File medium can be via file transfer protocol, as a text file, or another medium agreed to by the input activity and the D200F surveillance programmer. Older formats are valid for contracts established before the new Data Item Descriptions (DIDs 81220A and

81221A) were published. Any new contracts should be written to include the new data formats detailed in these DIDs. The file contains two records. The first includes NHA and component items identified by National Stock Number. The second includes components identified by part number. See **Chapter 7** for the data elements and formats.

8.1.9. DI-ILSS-81221A, End Item (EI) Production and Component Item (C/I) Consumption Repair History Data. The input from the DI-ILSS-81220A Contractor Reporting of Repair History provides data for overhaul or repair of Air Force equipment. File medium can be via file transfer protocol, as a text file, or another medium agreed to by the input activity and the D200F surveillance programmer. Older formats are valid for contracts established before the new Data Item Descriptions (DIDs 81220A and 81221A) were published. Any new contracts should be written to include the new data formats detailed in these DIDs. See **Chapter 7** for input formats. The file contains two records. The first includes NHA and component items identified by National Stock Number. The second includes components identified by part number. See **Chapter 7** for the data elements and formats.

8.1.10. Modification Schedule Summary, D363 Description/Purpose: This file interface is received monthly from the ALCs. The system uses this input to develop the tailored future modification program data. The elements provided from D363 are:

MDS

Mod Number

Remove/Install

Install Level

Mod Class

Start Date

End Date

Qty Programmed

Previous Qty Scheduled

1st FY and Qtr

Application Indicator

System Design

ALC Site Code

Qtrly Mod Schedules

8.1.11. Logistics Management Data Bank (D075). This was to be a temporary interface providing repair requirements data to D200 until D200D (Repair) was implemented. Since D200D was cancelled, this interface still exists and is received quarterly. The elements provided from D075 to D200F are:

Actual Stock Number

Subgroup Master Stock Number

MIEC Priority Sequence Code

Item Category Code

ERRC Code

Equipment Specialist Code

Air Force Manager ALC Code

Source of Repair Code

Requirement Begin Date (Fiscal YYQ)

Quarterly Repair Requirement Quantity (10 occurrences)

Yearly Repair Requirement Quantity (3 occurrences)

Processing Date

8.1.12. Contractor Supported Weapon System (CSWS) (D375), formerly RSSP Data Exchange. This is a daily input interface between D200F API and D375 (CSWS) for the purpose of submitting application, program and indenture data from the CSWS to D200F. The data provided will be used by the D200 systems in support of performing spares computations.

8.1.12.1. CSWS Indenture NHA data will include the following elements:

Document Identifier Code (DIC) ‘AIN’

Routing Identification Code

Type Action Code

Air Logistics Center Code

Division Code

Equipment Specialist Code

Next Higher Assembly Part Number

Next Higher Assembly Commercial and Government Entity Code

Next Higher Assembly Type Model Series Mission Design

Item Name

Source Maintenance Recoverability Code

Cataloging Activity Code

8.1.12.2. CSWS Indenture Component data will include the following elements:

Document Identifier Code (DIC) ‘AIC’

Routing Identification Code

Type Action Code

Next Higher Assembly Part Number

Next Higher Assembly Commercial and Government Entity Code

Next Higher Assembly Type Model Series Mission Design

Item Name

Component Part Number

Component Commercial and Government Entity Code

Component Type Model Series Mission Design Series Number

Quantity Per Assembly

Replacement Percent

Special Identification Code

Cataloging Activity Code

8.1.12.3. CSWS PROGRAM SELECT data will include the following elements:

Document Identifier Code (DIC) 'APS'

Routing Identification Code

Type Model Series Mission Design Series Number (Major End Item)

Type Model Series Number (Component Item)

Program Select Code

Program Development Code

Mission Item Essentiality Code

Source Reference Code

Subsystem Essentiality Code

Source Reference Code

Operational Auxiliary Power Unit Rate

Program Begin Date

8.1.12.4. CSWS Override Time Phase data will include the following elements:

Document Identifier Code (DIC) 'APO'

Routing Identification Code

Type Model Series Mission Design Series Number (Major End Item)

Type Model Series Number (Component Item)

Application Percent

Application Quantity

Replacement Percent

Effective Date

8.1.12.5. CSWS Application Program Master data will include the following elements:

Document Identifier Code (DIC) 'APM'

Routing Identification Code

Air Logistics Center Code

Application Program Designator Number

Type Program Code

Service Code

War or Peace Program Code

Division Code

Item Manager Clerk Code

Asset Cutoff Date

Past Program Quantity

Future Program Quantity

Retention Program Quantity

8.1.13. DMS Case Requests (DMSMS). The input from the DMSMS consists of an interface listing the discontinued National Stock Numbers (NSNs) and their associated case numbers. The presence of a NSN on this input constitutes a request for a file containing all Next Higher Assemblies (NHAs) directly attached to these NSNs in the physical relationships. Data content of the input is as follows:

DMS Case number

NSN (National Stock Number -- consists of FSC, IIN, MMAC)

8.1.14. Purchase Request Process System (D203). This interface file is received from D203 on a daily basis and contains one National Item Identification Number (NIIN) per record. This information is used to produce a file that identifies the Next High Assembly (NHA) and End Item data of the requested NIINs. The elements provided from D203 are:

National Item Identification Number (NIIN)

8.1.15. A400 Full Range List Request. This interface file is received on a quarterly basis from A400. The input from the A400 System contains the aircraft request for the Full Range List. The list of Data Elements on the input includes:

MDS

8.2. Output Interfaces.

8.2.1. Data Depot (Q302). D200F produces an output file upon request (as described in **paragraph 8.1.2.**) to Q302. The file contains physical indentures for the requested NHA.

8.2.1.1. The NHA output data elements are:

Job Number

NHA Identity (FSC/IIN/MMAC, Standard Designator)

End Item Code (constant-E-)

NHA Reference Number Logistics

NHA Federal Supply Code for Manufacturers (FSCM)

ERRC Code

Unit Price Cataloging

PSC

AF Manager ALC Code

Division Designator ES

Equipment Specialist Code

BOM Indicator (I, F or N)

8.2.1.2. Data Elements to appear on output – Components:

NHA Identity

Component Identity (FSC/IIN/MMAC, Standard Designator)

Component Reference Number Logistics

Component FSCM

Breakdown Sequence Number

ERRC Code

Replacement Percent

PSC

Special Identification Designator

Unit of Issue

Item Name

Unit Price Cataloging

AF Manager ALC Code

Division Designator ES

Quantity per Assembly (QPA)

BOM Indicator (constant-blank-)

Indenture Level Indicator (Constant "B")

8.2.2. Reutilization/Disposition System (RDS) D035G. D200F passes information to the RDS system as a result of input discussed in **paragragh 8.1.5.**. There are 3 output interfaces – 2 are identical except for frequency. The identical ones contain both **8.2.2.1.** and **8.2.2.2.** The data elements passed to RDS are:

8.2.2.1. Component data output on quarterly or as required basis:

Type = ‘1’

NIIN of D035G input

Component NIIN

REF NR LOG CMPNT

FSCM CMPNT

QPA of NIIN of D035G input / component relationship

8.2.2.2. NHA data output on a quarterly or as required basis:

Type = ‘2’

NIIN of D035G input

NHA NIIN

REF NR LOG NHA

FSCM NHA

QPA of NHA / NIIN of D035G input relationship

8.2.2.3. Reclamation data output on a as required basis:

MMAC

FSC

IIN

U-I

QPAPPL

SVC DESIG

RECL PRJ CD

RECL PRJ QTY

APPL PRGM DESIG

U-P COMP

ALC SITE CD

8.2.3. Weapon System Cost Retrieval System (H036C). This interface provides H036C with 3 types of data at the end of each Fiscal Year: past programs, a list of all valid aircraft and engine designations, and engine and aircraft application percents and QPAs.

8.2.3.1. The data elements passed to H036C for past programs are:

Standard Designator Type

Standard Designator

Program Type

Past Program Quantities

8.2.3.2. The data elements passed to H036C containing all valid aircraft and engine designations are:

Standard Designator

Reference Designator (if it exists)

8.2.3.3. The data elements passed to H036C containing engine and aircraft application percents and QPAs are:

Aircraft Standard Designator

Engine Standard Designator

Engine Type

QPA

Application Percent

Operation Factor

8.2.4. Air Force Application Data for D087W. This process generates an output file to the WSMIS System. The output contains Weapon System and Major End Item Applications for Recoverable and Equipment items to be used for computing/stratifying equipment and spare parts requirements.

8.2.4.1. Data Elements in Output for Cataloging Management Data:

Type of Record (Constant ‘1’. Only 1 record for a given Item NSN)

Item NSN

ERRC Code

Source of Supply

Source of Repair

Item Name

Inventory Manager Code

Catalog Unit Price

8.2.4.2. Data Elements in Output for Application Data:

Type of Record (Constant ‘2’. May have multiple records for a given NSN)

Item NSN

Application (1st Occurrence)

Application (2nd Occurrence)

Application (3rd Occurrence)

Application (4th Occurrence)

8.2.5. DMS Case NHA Data (DMSMS). The output to the DMSMS consists of an interface listing the discontinued National Stock Numbers (NSNs) and their associated case numbers. It also includes

additional information about the discontinued NSN plus information about the non-obsolete NHA and about the physical relationship between the NHA and NSN. This is produced as a result of the data request in paragraph **8.1.14.** Data content of the output is as follows:

DMS Case number

NSN (National Stock Number -- consists of FSC, IIN, MMAC)

Activity Code of discontinued NSN

MDC of discontinued NSN (IMS + DIV DESIG IMS)

NHA NSN

NHA Part Number

NHA CAGE

Activity Code of NHA

MDC of NHA

Unit Cost of discontinued NSN

Replenishment Percent (from physical relationship)

Quantity per Assembly (from physical relationship)

AF Manager ALC code of NHA

Div Desig ES of NHA

ES of NHA

8.2.6. NHA and End Item Data for D203 Query Request. D200F produces an output file to D203 in response to their interface request described in paragraph **8.1.15.** This file contains the NSN, NHA, and End Item data for the D203 requested NIIN.

8.2.6.1. Data Elements to appear on output:

Requested NIIN Identity:

NSN (FSC/IIN/MMAC)

NHA Identity:

NSN (FSC/IIN/MMAC or Standard Designator) Blank for Pseudo Item

NHA ID Type (S = Std-Desig, N = NSN, P = Pseudo Item)

NHA Item Name

NHA Reference Number Logistics

NHA CAGE

8.2.6.2. End Item Identity:

8.2.6.2.1. NSN (FSC/IIN/MMAC or Standard Designator) or NHA Reference Number Logistics

8.2.6.2.2. NHA CAGE

8.2.6.2.3. End Item Type (S = Std-Desig, N = NSN, P = Pseudo Item)

8.2.7. FRL Data for A400. This process generates a quarterly output file to the A400 System in response to the A400 request described in paragraph 8.1.16. The output contains Weapon System and Major End Item Applications for Recoverable and Equipment items to be used for computing/stratifying equipment and spare parts requirements.

8.2.7.1. Data Elements in Output for the MDS Data:

Item Code (‘E’)

Requested Identity

Type Identity

Source, Maintenance, Recoverability Code

Exempt Code

Review Date

ALC/DIV/ES

Z Record Count

Record Sequence Number

8.2.7.2. Data Elements in Output for Indenture Data:

Item Code (‘Z’)

Requested Identity

Next Higher Assembly Identity

Next Higher Assembly Type Identity

Next Higher Assembly Reference Number logistics

Next Higher Assembly FSCM

Component Type Identity

Component Indenture Level

Component Reference Number logistics

Component FSCM

Component Item Name

Component Source, Maintenance, Recoverability Code

Component ERRC CD

Component PMI Code

Component PSC

Component Acquisition Advice Code

Component ESD Designator

Component Special Identification Designator

Component SOS

Component Unit of Issue

Component Unit Price Cataloging

Component Breakdown Sequence Number

Component Quantity Per Assembly

Component Replacement Percent

Component Replacement Percent Source

Component Identity

Component AF Manager ALC Code

Component Division Designator Code

Component ES

Next Higher Assembly AF Manager ALC Code

Next Higher Assembly Division Designator

Next Higher Assembly ES

Next Higher Assembly ERRC Code

Record Sequence Number

8.2.8. Flying Hours and Application Transfers for OWRMR (D072). This process generates two weekly output files to the OWRMR System. The first output file contains Flying Hours data and the second output file contains Application Transfers for Standard Designator Types MDS and TMS.

8.2.8.1. Data Elements in Output for the Flying Hours Data:

STD DESIG

FIRST QUARTER PEACETIME FLYING HOURS

SECOND QUARTER PEACETIME FLYING HOURS

WARTIME FLYING HOURS MONTH 1

WARTIME FLYING HOURS MONTH 2

WARTIME FLYING HOURS MONTH 3

WARTIME FLYING HOURS MONTH 4

WARTIME FLYING HOURS MONTH 5

WARTIME FLYING HOURS MONTH 6

STD DESIG TYP (A,B,D,E,M,R,U,X)

SVC CD(A,B,C,D,G,M,X)

8.2.8.2. Data Elements in Output for the Application Transfers Data:

ACTUAL STOCK NUMBER

STD DESIG TYP (A,B,D,E,M,R,U,X)

STD DESIG

8.2.9. D375 RSSP Data Exchange Errors. Any error record rejected by D200F from the D375 input file described in paragraph **8.1.13.** will be sent back to D375. RSSP Exchange Error Data:

8.2.9.1. D375 RSSP Exchange Data record image

8.2.9.2. Error Message

Chapter 9

ON-LINE SYSTEM

9.1. General.

9.1.1. This chapter provides information that users need to use the automated interactive system. It includes procedures to gain access to the on-line system, navigate through the system, and use the embedded software packages that produce reports and queries.

9.2. Capabilities.

9.2.1. Users can perform the following functions on line:

9.2.1.1. Add, delete, and change data in the File Maintenance function.

9.2.1.2. View data in the Display function.

9.2.1.3. Request hard copy reports or sections of reports in the Output Products function.

9.2.1.4. Receive automatically generated reports.

9.2.1.5. Interrogate the database with ad hoc and library queries built in CA/DATAQUERY.

9.3. User Profiles.

9.3.1. D200F assigns separate profiles to each of the following users and allows them to perform the tasks specified:

9.3.1.1. HQ AFMC API OPR: This user maintains surveillance, policy, and command level monitoring of indentures adequacy, accuracy, and completeness. Establishes and modifies locally established programs, and monitors all program-related matters for requirements determination purposes. Also serves as the HQ AFMC API Policy OPR. This user is the command policy and direction focal point for matters related to API.

9.3.1.2. HQ AFMC Policy OPR: This user is the command policy and direction focal point for matters related to the Requirements Management System.

9.3.1.3. HQ AFMC Reclamation OPR: This user is the command focal point for reclamation processes and policy, and can initiate the Request Reclamation Data job.

9.3.1.4. ALC Program Monitor: This user establishes and modifies locally established programs, and monitors all program-related matters for requirements determination purposes.

9.3.1.5. ALC Indenture Monitor: This user establishes and maintains surveillance, policy, and ALC-level monitoring of the indentures adequacy, accuracy, and completeness. Ensures that the ESs follow HQ AFMC and ALC policy and procedures as it pertains to API.

9.3.1.6. System Program Manager (SPM), Single Manager (SM), System Support Manager (SSM), System Program Director (SPD), Materiel Group Manager (MGM): These users have overall responsibility for management and support of assigned weapon systems.

9.3.1.7. Production Management Specialist (PMS): These users provide Government Furnished Material (GFM) support for contract repair.

9.3.1.8. Reclamation Program Control Officer (RPCO): These ALC users initiate reclamation projects against excess NSNs, aircraft, missiles, or aircraft engines in coordination with the assigned System Program Manager (SPM) or Inventory Management Specialist (IMS). When HQ USAF/PES or the SPM determines that an item is excess and available for reclamation, the RPCO advises his/her counterparts at the other ALCs of the project by obtaining the project control number.

9.3.1.9. The ES establishes and maintains a single indenture concept of NHA to component item (parent/child) relationship.

9.3.2. See the D200F User Manual at **https://www.msg.wpafb.af.mil/sxr/** for a list of products and screens that each of the above users may view and update.

9.4. Navigation.

9.4.1. Navigation through the D200F on line system is menu-driven. The user signs in through the Requirements Management System sign-on screen by entering a valid User ID and password. The system takes the user to the RMS Main Menu. If using RMS TN3270, the user can select from the menus in one of two ways: tab to the blank space to the left of the desired screen selection, enter "X," and press ENTER, or tab to the command line in the lower left corner ("CMD"), enter the screen code for the desired selection, press ENTER. The screen code appears at the menu selection, immediately to the right of the blank space where the user enters "X." D200F is also available through the GUI interface.

9.4.1.1. **Table 9.1.** lists each screen in the system, its title, and the navigation address.

Table 9.1. On Line Screen Selection.

Screen	Title	Navigation (See Notes)	Screen	Title	Navigation (See Notes)
CPS	Component Program Selection	(DIS-AI)	IC	Indenture Chains (All)	(OP-AI)
IIND	Interactive Indentures	(DIS-AI)	CIRL	Component Item Review List	(OP-AI)
PDPS	SPD Program Selection	(DIS-AI)	FRL	Full Range List	(OP-AI)
SPDL	Standard Program Designators	(DIS-PRGM)	IIC	Incomplete Indenture Chain	(OP-AI)
DESC	Designator Conversion	(DIS-PRGM)	IS	Indenture Structure (Top-Down)	(OP-AI)
DFPL	Future Programs List	(DIS-PRGM)	MRL	Material Requirements List	(OP-AI)
DPPL	Past Programs List	(DIS-PRGM)	NBES	NHA By Equipment Specialist	(OP-AI)
MDS	SPD/MDS Table	(DIS-PRGM)	PRSL	Purchase Request Support List	(OP-AI)
POSL	Possession Code List	(DIS-PRGM)	RCNT	FRL Data File	(OP-AI)
SCCL	Subcustomer Conversion List	(DIS-PRGM)	REA	Repair Experience Analysis	(OP-AI)
SMC	BP/SMC Table	(DIS-PRGM)	RESD	ESD Identification Product	(OP-AI)
CMDF	Command Level Future Programs	(DIS-PRGM)	DIDP	Process ALC DID File 81220A	(OP-AI)
CMDP	Command Level Past Programs	(DIS-PRGM)	DIDN	Process ALC DID File 81221A	(OP-AI)
PEC	PEC/MDS Table	(DIS-PRGM)	RSPI	List of NHAs with Suppress Indic On	(OP-AI)
CAI	Copy/Add Indentures	(FM-AI)	RICS	Indenture Chain-Specified NHA	(OP-AI)
CHPS	Change Of Program Select Code	(FM-AI)	RSID	Special Identification Designation	(OP-AI)
CONS	Consumption History	(FM-AI)	RXMT	Exempt Code Query	(OP-AI)
IND	Indentures	(FM-AI)	TTE	Tools And Test Equipment	(OP-AI)
MIEC	MIEC Priority Table	(FM-AI)			
NHA	Next Higher Assembly	(FM-AI)			(OP-PRGM)

Screen	Title	Navigation (See Notes)	Screen	Title	Navigation (See Notes)
PROD	Production History	(FM-AI)	IMOD	Install Mod Sched	(OP-PRGM)
PS	Program Selection	(FM-AI)			
RSTR	Restore Data for Stock Nr or Part Nr/Cage	(FM-AI)			
ULRL	Upper/Lower Reject Limit	(FM-AI)			
CAPS	Copy/Add Program Selection	(FM-PRGM)			
DESC	Designator Conversion	(FM-PRGM)			
FFWD	Projected Wartime Program	(FM-PRGM)	RFPL	AFLC Program Report	(OP-PRGM)
FPAP	Past Actual Program	(FM-PRGM)	RMPC	Mod Program Computation	(OP-PRGM)
FPRP	Projected Peacetime Program	(FM-PRGM)	RPCR	Request Past Program Change Report	(OP-PRGM)
FVPT	Valid Program Table	(FM-PRGM)	RPEC	Past Engine and PEC Computation	(OP-PRGM)
MDS	SPD/MDS Table	(FM-PRGM)	RPRC	Projected Engine and PEC Computation	(OP-PRGM)
PEC	PEC/MDS Table	(FM-PRGM)			
POSC	Possession Code	(FM-PRGM)			
RSPD	Redesignate A SPD	(FM-PRGM)	RTMR	Tailored Mod Report	(OP-PRGM)
SCCT	Subcustomer Conversion Table	(FM-PRGM)	SPDL	Standard Program Designators	(OP-PRGM)
SMC	BP/SMC Table	(FM-PRGM)	TAC	Current Projected To Past Project	(TRND)
SPD	Standard Program Designator	(FM-PRGM)	TAP	Past Projected To Past Actual	(TRND)

NOTES:

(DIS-AI) Applications and Indentures Display (FM-PRGM) Program File Maintenance

(DIS-PRGM) Programs Display (OP-AI) Output Products – Applications and Indentures

(FM-AI) Applications and Indentures File Maintenance (OP-PRGM) Output Products - Programs

TRND Trend Analysis

Table 9.2. Indentures Quality Review Checklist (Page 1).

NSN **P/N** **CAGE/FSCM**			**Date Reviewed**		**ES Name/Office Symbol/DSN**
	Element	**OK**	**Error**	**Nature of Error**	**Comments/Recommended Corrective Action**
1.	Next Higher Assembly (NHA)			No component items indentured to the NHA.	
2.	Component Items			Component items in the indenture chain are not valid components to that particular NHA.	
3.	Indenture Data A. Standard Designator (STD DES)			STD DES is not in the proper format to be recognized by API system.	
	B. Standard Program Designator (SPD)			(1) Component not linked through indenture chain to the SPD. (2) Quarterly Incomplete Indenture Chain Report reports error(s).	
	C. Source, Maintenance and Recoverability Code (SMR) and Expendability, Recoverability, Reparability, Category Code (ERRC)			(1) SMR is missing. (2) Invalid ERRC code.	

NSN P/N CAGE/FSCM				Date Reviewed	ES Name/Office Symbol/DSN
	Element	**OK**	**Error**	**Nature of Error**	**Comments/Recommended Corrective Action**
	D. Interchangeability and Substitutability (I&S)			I&S relationship is incorrect.	
	E. Indenture Replacement Percents			(1) Indenture Replacement Percent is incorrect. (1a) Validate Production History (1b) Validate Consumption History	
	F. Override Replacement Percent			Override Replacement Percent is incorrect.	
	G. Source Reference Code (SRC)			When two or more levels of indenture separate the related NHA and component, the SRC is not blank.	
	H. Mission Item Essentiality Code (MIEC); System Essentiality Code (SEC); Subsystem Essentiality Code (SUBS ESSN CD); Item Essentiality Code (IEC)			(1) MIEC is incorrect. (2) SEC is incorrect. (3) SUB ESSN CD is incorrect. (4) IEC is incorrect.	

NSN **P/N** **CAGE/FSCM**				**Date Reviewed**	**ES Name/Office Symbol/DSN**
	Element	**OK**	**Error**	**Nature of Error**	**Comments/Recommended Corrective Action**
	I. Special Identification Code (SID)			SID is incorrect.	
	J. Electrostatic/ Electromagnetic Sensitive Devices (ESD)			ESD is incorrect.	

Table 9.3. Indentures Quality Review Checklist (Page 2).

	Element	**OK**	**Error**	**Nature of Error**	**Comments/ Recommended Corrective Action**
	K. Program Select Data			Program Select Data is incorrect.	
4.	Signature			Printout has not been signed by the ES	
Reviewer				Date	

Attachment 1

GLOSSARY OF REFERENCES AND SUPPORTING INFORMATION

Abbreviations and Acronyms

AAC—Acquisition Advice Code

AAM—Aircraft Availability Model

ACC—Air Combat Command

AET—Aerospace Education and Training Command

AF—Air Force

AFA—Air Force Academy

AFE—United States Air Forces in Europe

AFMC—Air Force Materiel Command

AFR—Air Force Reserves

AI—Add Indentures

ALC—Air Logistics Center

AMC—Air Mobility Command

ANG—Air National Guard

APB—Amended President's Budget

APD—Application Program Designator

API—Applications, Programs, and Indentures

APPL%—Application Percent

APU—Auxiliary Power Unit

AV—Aerospace Vehicle

BES—Budget Estimate Submission

BML—Bulk Materials List

BOM—Bill of Material

BSN—Breakdown Sequence Number

CAGE—Commercial or Government Entity

CAI—Copy/Add Indentures

CAL YR/QTR—Calendar Year/Quarter

CE—Communications Electronic

CEM—Communications/Electronic/Meteorological

CI—Component Item

CIRL—Component Item Review List

CLS—Contractor Logistics Support

CSRD—Computer System Requirements Document

CSWS—Contractor Supported Weapon System (D375)

CUR—Current

DCN—Design Change Notice

DESC—Designator Conversion

DIC—Document Identifier Code

DID—Data Item Description

DIS—Display

DISA—Defense Information Systems Agency

DLA—Defense Logistics Agency

DLM—Depot Level Maintenance

DMSMS—Diminishing Manufacturing Sources and Material Shortage

DoD—Department of Defense

DR—Deficiency Report

DSCC—Defense Supply Center – Columbus

EAIM—End Article Item Manager

EI—End Item

ECP—Engineering Change Proposal

EOH—Engine Overhauls

ERRC—Expendability, Recoverability, Repairability Category

ES—Equipment Specialist

ESD—Electromagnetic and Electrostatic Sensitive Devices

FFWD—Projected Wartime Program

FM—File Maintenance

FMS—Foreign Military Sales

FOE—Final Operating Environment

FPRP—Projected Peacetime Program

FRL—Full Range List

FY—Fiscal Year

GFM—Government Furnished Materiel

IC—Indenture Chain

ICP—Inventory Control Point

ICS—Interim Contract Support

IEC—Item Essentiality Code

IIC—Incomplete Indenture Chains

IIN—Item Identification Number

IMOD—Install Modification Schedule

IMS—Inventory Management Specialist

IND—Indentures

IS—Indenture Structure

ISS—Interim Supply Support

IWSM—Integrated Weapon System Management

LRU—Line Replaceable Unit

LSA—Logistic Support Analysis

MAJCOM—Major Command

MDS—Mission-Design-Series

MGM—Materiel Group Manager

MIEC—Mission Item Essentiality Code

MIICS—Master Item Identification Control System

MIPR—Military Interservice Purchase Request

MISTR— Management of Items Subject to Repair

MMAC—Materiel Management Aggregation Code

MP&E—Maintenance Planning and Execution (D363)

MRL—Material Requirements List

MSG—Materiel Systems Group

MTC—Air Force Materiel Command

NBES—Next Higher Assembly by ES

NHA—Next Higher Assembly

NIIN—National Item Identification Number

NMCS—Not Mission Capable Supply

NSN—National Stock Number

OIM—Organizational Intermediate Maintenance

OPR—Office of Primary Responsibility

OWRM—Other War Reserve Materiel

PA—Program Authorization

PAF—Pacific Air Forces

PAI—Primary Active Inventory

PB—President's Budget

PBD—Program Begin Date

PCR— Process Change Request

PDC—Program Development Code

PDM—Programmed Depot Maintenance

PDPS—SPD Program Selection

PFD—Process Functional Description

PM—Program Manager

PMS—Production Management Specialist

PN—Part Number

POM—Program Objective Memorandum

PPL—Provisioning Parts List

PRGM—Program

PRSL—Purchase Request Support List

PSC—Program Select Code

QPA—Quantity Per Assembly

QPAPPL—Quantity Per Application

REA—Repair Experience Analysis

RECL—Request Reclamation Data

RDB—Requirements Data Bank

RDS—Reutilization/Disposition System (D035G)

REMIS—Reliability and Maintainability Information System (G099)

REPL%—Replacement Percent

RFP—Request for Proposal

RIID—Requirements Item Identification

RMS—Requirements Management System

RPCO—Reclamation Program Control Officer

RSSP—Reformed Supply Support Program

SAAMS—Standard Automated Materiel Management System

SEC—System Essentiality Code

SERD—Support Equipment Recommendation Document

SID—Special Identification Designator

SIRS—Secondary Item Requirements System

SM—Single Manager

SMR—Source, Maintenance, Recoverability

SND—Stock Number Data

SOC—Special Operations Command

SPC—Air Force Space Command

SPD—Standard Program Designator; System Program Director

SPM—System Program Manager

SRC—Source Reference Code

SRD—Standard Reporting Designator

SRRB—Spares Requirements Review Board

SSEC—Sub-system Essentiality Code

SSIPT—Supply Support Integrated Product Team

SSM—System Support Manager

TAC—Trend Analysis Current

TAI—Total Active Inventory

TAP—Trend Analysis Past

TCTO—Time Compliance Technical Order

TMS—Type-Mission-Series; Type-Model-Series

TO—Technical Order

TOA—Type of Action

TTE—Tools and Test Equipment

UM—Users Manual

Terms

AFMCProvisioning System—The automated source of Master Material Support Record Data, which identifies component items subject to repair.

Application—Any assembly in an indenture chain, including the end item that generates measurable program activity. An assembly becomes an application when the ES determines that it requires spare part

support as part of its normal maintenance.

Application Percent—The percentage of the population of higher assemblies that has a given component installed in it.

Assembly—A part or item that has been built from two or more components.

CA DISPATCH—A commercial software package that processes and generates reports for all RMS subsystems.

Component—A part of an assembly. A component loses its identity when installed in a higher-level assembly.

Consumption—Removal and replacement of component parts during repair or overhaul of a higher assembly

D200F Applications, Programs, and Indentures (API) System—A subsystem of the Air Force Requirements Management System (RMS) and is the approved Air Force tool for maintaining hardware indentures and relating program data to secondary items.

Derived Data—Indenture data (QPA QPAPPL, APPL%) that were developed in other systems and passed to D200F through system interfaces.

End Item—A complete assembly; an assembly that has no next higher assembly.

Exemption Code—A code that precludes D200F from reporting indentured components for a given assembly

Indenture—The breakdown of an assembly to its constituent components, and the data that defines the relationship of the assembly to its components.

Indenture Chain—The "bottom up" linkage of a component to its end item through an upward progression of higher assemblies.

Indenture Structure—A conceptual tree that breaks an assembly down to its components, and in turn breaks each component down to its parts until the bottom level is reached.

Integrated Weapon System Management (IWSM)—A management concept directed by the Secretary of Defense in 1985 to consolidate responsibility for managing all facets of the development, production, modification, support, and retirement of a weapon system under a single manager.

Interim Supply Support (ISS)—A program in which a contractor performs materiel management functions, including provisioning tasks, during the period when a new system or end item is being fielded and demand patterns stabilize.

Inventory Program—The population of end item applications that are in use by field activities.

Linkage Data—Information that defines the relationship of a component with its next higher assembly; includes Quantity per Assembly and Application Percent.

Materiel Group Manager (MGM)—The single manager who is charged with all cost, schedule, and performance aspects of a materiel group that includes end items and components that do not require a standing development capability

Mission Item Essentiality Code (MIEC)—is a three position alphanumeric code that indicates an item's relative importance to weapon system support.

Next Higher Assembly—The assembly in which a given component is directly installed.

Operational program—Activity performed by users of an end item when carrying out their missions. In the Air Force operational programs are expressed as flying hours or sorties.

Override Data—Values that the ES assigned to indenture relationships that supersede the derived or default data.

Production—The number of assemblies or end items output by a depot level repair or overhaul activity.

Program—Any activity that creates the need for spare parts.

Program Begin Date—The starting point for computing an Item Program from the Application Program identified by the SPD and the Program Select Code.

Program Selection—The process that assigns program data from an application to a component.

Quantity per Application—The number of components that are installed in a higher assembly that is also the component's application. The application and the next higher assembly may or may not be the same assembly.

Quantity per Assembly—The number of components that are installed in that component's next higher assembly.

Recoverable Component—A component that can be removed from its next higher assembly, repaired, and returned to inventory.

Replacement Percent—The percentage of components installed in the application that are removed and replaced as the application undergoes overhaul or repair.

Retention Program—The sum of the last three years' of authorized program; used by SIRS to determine the quantities of components that are in excess of inventory needs.

Retention Quantity—The sum of the last three years of program data and is the 39th Position Indicator.

Source Reference Code—A code that indicates how the value of a field was acquired.

Special Identification Designator—A code identifies a special condition or additional information pertaining to a component in an indenture chain.

Standard Program Designator—Any end item or assembly that requires spare part support for continued operation.

System Program Director (SPD.)—The single individual, under the integrated weapon system management architecture, responsible for the life-cycle management of a system or commodity. The SPD is the program manager vested with full authority, responsibility, and resources to execute an approved acquisition program on behalf of the Air Force. For acquisition related matters, the SPD is accountable to the program executive officer or the designated acquisition commander.

Time Phasing—Manipulation of the application percent in a way that allows an application's projected program to increase or decrease in quarterly increments. The primary use for time phasing is in support of tailored modification programs that involved phasing out of an obsolete component and phasing in a replacing component.

Trend Analysis—A feature of the RMS on-line system that allows users to view and compare SPD's most current program authorization with previous authorizations, and to compare past authorized

programs with program that actually generated.

Weapon System—An instrument of combat, together with all related equipment (airborne, seaborne, and ground based), the skills necessary to operate the equipment; and the supporting facilities and services required to enable the instrument to be a single unit of striking power in its operational environment