APPLICATION		REVISION HISTORY			
NEXT ASSY	USED ON	LTR	DESCRIPTION	DATE	APPROVED

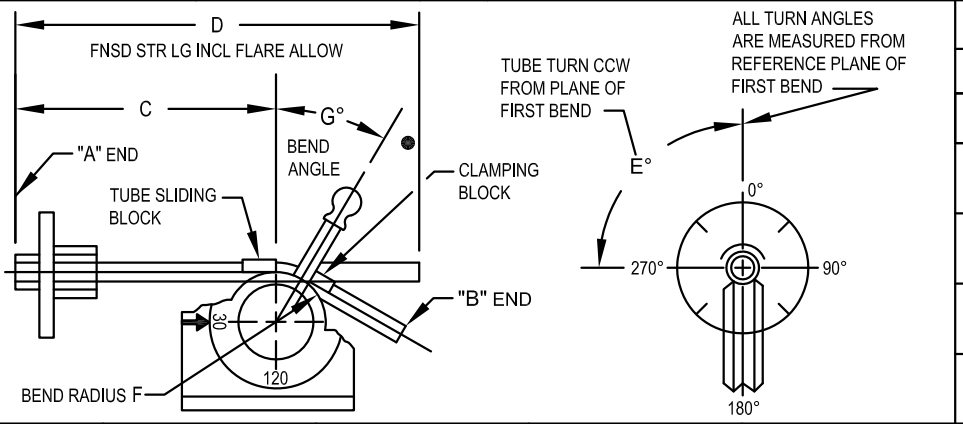

TUBE SIZE		
OD	WALL	D LENGTH

HEAT TREAT

FINISH

COLOR CODE

PART IDENT.

BEND NO.	C DISTANCE	F BEND RADIUS	E TURN ANGLE	G BEND ANGLE

LIMIT WRINKLES, FLATNESS PER SAE AS33611

END	FITTING	TYPE
A	CAP SLEEVE	
B	CAP SLEEVE	

TYPE OF END

1 FLARE SAE AS4330
2 DBL FLARE SAE AS33583
3 BEAD SAE AS5131
4 SQUARE
5 NOTED
PROTECT ENDS PER NAS847

NOTES:
1. ADD _____ INCHES TO D LENGTH AT "A" END FOR CLAMPING, ETC WHEN REQUIRED
2. ADD _____ INCHES TO D LENGTH AT "B" END FOR FIRST BEND WHEN REQUIRED

DASH NO.

UNLESS OTHERWISE SPECIFIED DIMENSIONS ARE IN INCHES
TOLERANCES ON

FRACTION	DECIMALS	ANGELS
±	.XX ±	±
	.XXX ±	

CONTRACT NO.	
DRAFTER	DATE
CHECKER	
PROJECT ENGINEER	
ENG APPROVAL	
AF AUTHENTICATION	
AF RELEASE	

U.S. AIR FORCE

TITLE

SIZE	A.F. CODE IDENT NO.	DRAWING NO.
A		

SCALE NONE | SHEET 1 OF