Administrative Changes to AFI13-204, VOLUME 3, AFGSCSUP, *Airfield Operations Procedures and Programs*

3 OCTOBER 2016

OPR: HQ AFGSC/A3OA

References throughout to A33S are hereby changed to A3OA.

BY ORDER OF THE SECRETARY OF THE AIR FORCE

AIR FORCE INSTRUCTION 13-204, VOLUME 3

1 SEPTEMBER 2010

Incorporating Change 2, 29 June 2015

AIR FORCE GLOBAL STRIKE COMMAND Supplement

20 MAY 2016

Space, Missile, Command and Control

AIRFIELD OPERATIONS PROCEDURES AND PROGRAMS

COMPLIANCE WITH THIS PUBLICATION IS MANDATORY

ACCESSIBILITY: Publications and forms are available on the e-Publishing website at **www.e-Publishing.af.mil** for downloading or ordering.

RELEASABILITY: There are no releasability restrictions on this publication.

OPR: HQ AFFSA/XA

Certified by: HQ USAF/A3O-B (Mr Steven Pennington)

Supersedes: AFI 13-203, 30 November 2005; AFI 13-204, 10 January 2005; AFI 13-213, 29 Jan 2008; Chapters 1, 2, 3, 5 thru 7

Pages: 256

(AFGSC)

OPR: HQ AFGSC/A33S

Certified by: HQ AFGSC/A33 (Col Todd A. Worms)

Supersedes: AFI 13-204v3_AFGSCSUP, 23 October 2014

Pages: 7

This instruction implements AFPD 13-2, *Air Traffic Control, Airspace, Airfield, and Range Management.* It applies to all US Air Force (USAF), Air National Guard (ANG) and Air Force Reserve Command (AFRC) organizations (to include contracted locations) that operate or administer functions in facilities in the airfield operations flight (AOF). At joint, shared-use and overseas airfields, this instruction applies to the facilities that are controlled and used exclusively by the Department of the Air Force, as outlined in real estate documents or letters of agreement. It directs the administration of facilities, the use of equipment, the operations, and the training of airfield operations. It outlines duties and responsibilities of AOF members assigned to the unit

level. It sets policy and describes unit, Major Command (MAJCOM) and USAF roles for managing airfield operations at USAF own/operated locations. This Air Force Instruction (AFI) may be supplemented at any level, however all supplements to include interim changes to previously approved supplements must be routed to Headquarters (HQ) Air Force Flight Standards Agency, Director of Airfield Operations (HQ AFFSA/XA) for coordination prior to certification and approval. The authorities to waive wing/unit level requirements in this publication are identified with a Tier ("T-0, T-1, T-2, T-3") number following the compliance statement. See AFI 33-360, *Publications and Forms Management*, Table 1.1 for a description of the authorities associated with the Tier numbers. Submit requests for waivers through the chain of command to the appropriate Tier waiver approval authority, or alternately, to the Publication OPR for non-tiered compliance items. Refer recommended changes and questions about this publication to the Office of Primary Responsibility (OPR) using the AF Form 847, *Recommendation for Change of Publication*; route AF Form 847s from the field through the appropriate functional's chain of command. Ensure that all records created as a result of processes prescribed in this publication are maintained in accordance with (IAW) Air Force Manual (AFMAN) 33-363, *Management of Records*, and disposed of IAW Air Force Records Disposition Schedule (RDS) located in the Air Force Records Information Management System (AFRIMS). The use of the name or mark of any specific manufacturer, commercial product, commodity, or service in this publication does not imply endorsement by the Air Force. The reporting requirements in this AFI are exempt from licensing with a report control symbol (RCS) according to AFI 33-324, *The Air Force Information Collections and Reports Management Program*. See **Attachment 1** for a glossary of references and supporting information used in this instruction.

(AFGSC) This supplement implements and extends the guidance of AFI 13-204, Volume 3. It applies to all civilian employees, contractors, and active duty and reserve personnel assigned to or supporting AFGSC operations within the airfield operations flight (AOF). It directs the administration of facilities, the use of equipment, the operations, and the training of airfield operations. It outlines duties and responsibilities of AOF members assigned to the unit level. This publication implements Major Command guidance by supplementing specific processes and procedures for managing airfield operations at AFGSC locations. Refer recommended changes and questions about this publication to the Office of Primary Responsibility (OPR) using the AF Form 847, *Recommendation for Change of Publication*; route AF Form 847s from the field through the appropriate chain of command. Ensure all records created as a result of processes prescribed in this publication are maintained in accordance with Air Force Manual (AFMAN) 33-363, *Management of Records*, and disposed of in accordance with the Air Force Records Information Management System (AFRIMS) Records Disposition Schedule (RDS). The reporting requirements in this supplement are exempt from licensing with a report control symbol (RCS) according to AFI 33-324, *The Information Collections and Reports Management Program; Controlling Internal,*ictect*Public, and Interagency Air Force Information Collection.* The authorities to waive wing/unit level requirements in this publication are identified with a Tier ("T-0, T-1, T-2, T-3") number following the compliance statement. See AFI 33-360, *Publications and Forms Management*, Table 1.1 for a description of the authorities associated with the Tier numbers. Submit requests for waivers through the chain of command to the appropriate Tier waiver approval authority, or alternately, to the Publication OPR for non-tiered compliance items.

SUMMARY OF CHANGES

This interim revises AFI 13-204 Volume 3 by incorporating SAF/IGI tier waiver authority guidance outlined in AFI 33-360, *Publications and Forms Management.* Minor changes were made throughout and include reference updates and editing errors. A margin bar (|) indicates newly revised material.

(AFGSC) Major updates include additions of Tiered items and revisions to the following: airfield operating hours, AFGSC workflow email address, and documentation of personnel outside of CAFSC.

Chapter 1— GENERAL INFORMATION **12**

1.1. HQ AFFSA (Air Force Flight Standards Agency) is the USAF's executive agent for terminal area Airfield Operations (AO) matters. 12

1.2. Scope and Purpose of this Instruction. 12

1.3. Waivers and Recommended Changes. 13

1.4. Conflicting Directives. 14

1.5. Issuing New USAF AO Policy or Procedures. 15

1.6. FAA General Notices (GENOTs). 15

1.7. Responsibilities: 15

Chapter 2— AIRFIELD OPERATIONS FLIGHT STAFF POSITIONS **17**

2.1. Duty Titles. 17

2.1. (AFGSC) Duty Titles. 17

2.2. AOF Staff. 17

2.3. DoD Civilians and Contractors. 17

2.4. TERPS Specialist. 19

Chapter 3— OPERATION OF USAF AIRFIELDS **20**

3.1. Operation of USAF Airfields. 20

3.2. AO Operating Requirements. 22

3.2. (AFGSC) AO Operating Requirements. 22

3.3. Published Operating Hours. 23

3.3. (AFGSC) Published Operating Hours. 23

Table 3.2. (Added-AFGSC) AFGSC Airfield Hours. 23

3.4. Curtailing AO Services 24

3.5. Extended ATC Facility Closures or Equipment Limitations Affecting Controller Proficiency. 25

3.6. Permanently Closing Runways. 25

3.7. Activating Previously Closed Runways. 26

3.8. Changes in Flying Mission. 26

3.9. Notices to Airmen (NOTAM). 26

3.10. Unmanned Aircraft Systems (UAS) Operations. 27

Table 3.1. UAS/RPA Categories 28

Chapter 4— AO FLIGHT MANAGEMENT AND PROGRAMS 33

4.1. Local Operating Procedures (LOPs). 33

4.2. Airfield Operations Board (AOB). 35

4.3. AOF Training Review Board (TRB) (Not applicable to AFRC and RAF Fairford). 36

4.3. (AFGSC) AOF Training Review Board (TRB) (Not applicable to AFRC and RAF Fairford). 36

4.4. AO Manning. 36

4.5. Critical Manning Options. 37

4.6. Actions Following an Aircraft Mishap. 37

4.7. Accident Investigations Support. 40

4.8. Night Vision Device (NVD) Operations. 40

Chapter 5— RECORDS MANAGEMENT, INQUIRIES, AND DATA 42

5.1. Recorded Records. 42

5.2. Retaining Mishap Records. 42

5.3. Releasing Aircraft Mishap/Incident Related Information. 43

5.4. Removing Original Records. 44

5.5. How To Prepare Transcripts. 45

5.6. ATC Forms. 46

5.7. Charts, Maps, Publications and Instruction Files. 47

5.8. Military Air Traffic Activity Reports (ATARS). 48

5.8. (AFGSC) Military Air Traffic Activity Reports (ATARS). 48

Chapter 6— CONVERTING AO SERVICES 50

6.1. Coordination Requirements. 50

6.2. ATC Contracting Policy. 50

Chapter 7— ATC FACILITY MANAGEMENT AND OPERATING PROCEDURES 51

7.1. ATC Staff Positions. 51

7.2. ATC Facility OI Construction. 61

7.3. Facility Staffing Requirements. 61

Table 7.1. Published Operating Hours per Facility 62

7.4. ATC Restrictions and Duty Limitations: 62

7.5. ATC Certification Requirements: 64

7.6. Proficiency Program. 65

7.7. Consolidating Positions. 65

7.8. Operating Initials. 65

7.9. Pre-Duty Familiarization. 65

7.10. Wind Information. 66

7.11. Use of Communications. 66

7.12. Landline Operations. 67

7.13. Radar and Tower Coordination. 67

7.14. Minimum Distance Without Final Clearance. 70

7.15. Opposite Direction Traffic. 70

7.16. Practice Approaches/Departures. 70

7.17. Clearance Delivery. 71

7.18. Emergency Frequencies. 71

7.19. Interruptions to ATCALS. 71

7.20. Monitoring NAVAID Equipment. 72

7.21. Auxiliary Power for ATCALS Facilities. 73

7.22. Alternate ATC Capabilities. 73

7.23. Precision Approach Critical Areas. 74

Figure 7.1. Localizer Critical Area. 77
Figure 7.2. Glide Slope Critical Area. 78
Figure 7.3. Touchdown Area. 79
Figure 7.4. MMLS Azimuth Critical Areas. 80
Figure 7.5. MMLS Elevation Critical Areas 81
7.24. Displaced Landing Threshold. 81
Chapter 8— ATC EQUIPMENT 82
8.1. Equipment Checks. 82
8.2. Facility Clocks. 83
8.3. Weather Equipment. 83
8.4. Recorders. 84
8.5. Primary Crash Alarm System (PCAS). 85
8.6. Land Mobile Radios (LMR). 86
8.7. Airfield Lighting Systems. 86
8.8. Multiple Instrument Landing Systems (ILS) Facilities: 86
8.9. ILS Equipment Requirements for Operation. 86
8.10. Automated ATC Systems. 87
8.11. Radar Mapping Equipment. 94
8.12. Battery-Powered Transceivers. 94
8.13. Air Traffic Control Facility Modifications. 95
8.14. Facility Security. 95
8.15. Gas Mask (MCU-2A/P) Communication System Interface Equipment. 95
8.16. Emergency Warning and Evacuation Alarms. 95
8.17. Certified Tower Radar Display (CTRD). 95
8.18. Headsets. 95
8.19. Airfield Automation System (AFAS) Requirements. 95
8.20. Unauthorized Devices. 96
8.21. Wireless Local Area Network (WLAN). 96
8.22. Cellular Telephones. 96

8.23. Control Tower Plastic Window Shades. 96

Chapter 9— CONTROL TOWER OPERATIONS 97

9.1. Light Gun Operations. 97

9.2. Takeoff or Landing Direction Determination. 97

9.3. Control of Ground Traffic in CMAs. 97

9.4. Wind Limitations on Control Towers. 97

9.5. Functional Use of Certified Tower Radar Display (CTRD). 97

9.6. Wear of Sunglasses in Control Towers. 98

9.7. Protection of 360 Overhead Pattern. 98

9.8. Tower Equipment Requirements. 98

9.9. USAF VFR Tower Operations Within Class C Airspace. 99

9.10. Aircraft Arresting Systems. 99

9.11. Restricted Runway Operations. 100

9.12. Standardized Taxi Routes (STRs). 100

Chapter 10— RADAR OPERATIONS 101

10.1. Radar Use. 101

10.2. AN/TPX-42 Strapping. 102

10.3. Range Azimuth Beacon Monitor (RABM). 102

10.4. Radar Reflectors for Precision Approach Radar (PAR). 102

10.5. Radar Glide Path and Course Information. 103

10.6. PAR Safety Zones. 103

Figure 10.1. Typical PAR Elevation Display. 104

10.7. Decision Height (DH). 105

Table 10.1. PAR Lateral Safety Limits and Approximate Displacement Distance. 105

10.8. Use of Precision Approach Radar (PAR) 105

10.9. Airport Surveillance Radar (ASR) Approach Procedures. 106

10.10. Standard Terminal Automation Replacement System (STARS). 106

10.11. Radar Performance Checks. 106

10.12. Surveillance Antenna Operation in High Wind. 107

10.13. Diverse Vector Area (DVA). 107

10.14. Designation of Sectors. 108

10.15. Multiple Radar Final Control (RFC) Requirement. 108

10.16. Radar Equipment Requirements. 108

10.17. PAR Associated Equipment Requirements. 108

10.18. Turn-around for ATC Radar. 109

10.19. Non-Radar Board. 109

10.20. FAA/USAF Contingency Plan Agreements. 109

Chapter 11— SPECIAL OPS AND SUPPLEMENTAL PROCEDURES 112

11.1. Exercises. 112

11.2. Supervisor of Flying (SOF). 112

11.3. Aircraft Priorities. 112

11.4. Reduced Same Runway Separation (RSRS). 112

11.5. Radar-in-Trail Recovery. 112

11.6. Unlawful Seizure of Aircraft. 113

11.7. Min-Comm/Comm-Out. 113

11.8. Night Vision Device (NVD) use in terminal airspace. 113

11.9. Explosives Detection K-9 Teams. 114

11.10. Parachute Jump Operations. 114

11.11. Prohibited/Restricted Areas. 115

11.12. Reporting Laser Illumination of Aircraft. 115

Chapter 12— PROCEDURES FOR ESTABLISHING VFR FLYING AREAS AND TRAFFIC PATTERNS 117

12.1. VFR Traffic Patterns: 117

12.2. VFR Traffic Pattern Types: 117

12.3. VFR Traffic Pattern Altitudes. 117

12.4. Environmental Impact Analysis and Air Installation Compatible Use Zone (AICUZ). 118

Chapter 13— ATC TRAINING PROGRAM 119

13.1. Purpose..... 119

13.2. ATC Training Program Structure. 119

13.3. Training OI (TOI) Construction..... 119

13.4. Master Training Plan (MTP)..... 119

13.5. Certification Guides (Part I, II, III and IV). 120

13.6. Records and documentation. 121

13.7. Evaluations..... 123

13.8. HQ AFFSA Airfield Operations SharePoint website /Instructional Technology. .. 124

13.9. Special Tactics Combat Control Team (CCT) Training. 125

13.10. Withdrawal from ATC Duty. 125

13.11. Withdrawal Categories. 126

13.12. Withdrawal and Reinstatement Procedures and Notification: 128

Chapter 14— ATC RECURRING, REVIEW, AND SUPPLEMENTAL TRAINING 129

14.1. Recurring Training..... 129

14.2. Monthly Training Requirements..... 130

14.3. Monthly Training Testing. 130

Chapter 15— AM PERSONNEL DUTIES AND RESPONSIBILITIES 131

15.1. AM Staff Personnel (Military, DoD Civilian, Contract). 131

15.2. Airfield Management Operations Personnel (Military, DoD Civilian, Contract)... 156

Chapter 16— AM FACILITY STAFFING 159

16.1. Manpower requirements to support a wing/base level AM function are outlined in Capabilities-Based Manpower Standard..... 159

16.2. Airfield Management Operations Section Staffing..... 159

Chapter 17— AIRFIELD INSPECTIONS AND CHECKS 160

17.1. Airfield Inspection. 160

17.2. Airfield Check..... 162

17.3. Additional Airfield Inspections..... 164

Chapter 18— DETERMINING AND REPORTING RUNWAY SURFACE CONDITION (RSC) AND RUNWAY CONDITION READING (RCR) 165

18.1. RSC and RCR procedures. 165

18.2. Determining RSC and RCR. 165

18.3. Reporting Runway Conditions. 166

18.4. Conducting RSC and RCR Checks. 167

Chapter 19— AM TRAINING PROGRAM 168

19.1. Introduction. 168

19.2. Purpose. 168

Chapter 20— AM FACILITIES AND EQUIPMENT 177

20.1. AM Facilities. 177

20.2. Airfield Management Operations (AMOPS) Section. 177

20.3. Flight Planning Room. 180

20.4. Airfield Status Display. 181

20.5. Aircrew Lounge. 181

20.6. Emergency Response Vehicle (N/A at AFRC ramp only locations). 181

20.7. Night Vision Devices (NVDs). 182

20.8. AM Alternate Facility Equipment. 182

Chapter 21— AIRFIELD RESTRICTIONS AND CLOSURE PROCEDURES. 183

21.1. Airfield Restrictions. 183

21.2. AM Procedures. 183

21.3. Prescribed and Adopted Forms. 184

Attachment 1— GLOSSARY OF REFERENCES AND SUPPORTING INFORMATION 186

Attachment 2— AIRFIELD OPERATIONS INSTRUCTION (AOI) REQUIREMENTS 208

Attachment 3— MANDATORY AIRFIELD OPERATIONS BOARD (AOB) BRIEFING ITEMS 212

Attachment 4— ORM CONSIDERATIONS FOR OPERATIONS WHEN ESSENTIAL SERVICES ARE NOT AVAILABLE 214

Attachment 5— AOF TRAINING REVIEW BOARD BRIEFING ITEMS 216

Attachment 6— ATCALS REVIEW BOARD 218

Attachment 7— ATC NEWCOMER'S INDOCTRINATION PROGRAM 220

Attachment 8— AM NEWCOMER'S INDOCTRINATION PROGRAM 224

Attachment 9— TRAINING RECORDS INSPECTION CHECKLIST 227

Attachment 10— SAMPLE AIRFIELD INSPECTION AND CHECK FORM 232

Attachment 11— AIRFIELD LIGHTING CHART 234

Attachment 12— SAMPLE MEMORANDUM, SUSPENSION OF ATCS CERTIFICATE 239

Attachment 13— SAMPLE MEMORANDUM, FEAR OF CONTROLLING (FOC) STATEMENT 240

Attachment 14— AFSC WITHDRAWAL CHECKLIST FOR CONTROLLERS WHO FAIL TO OBTAIN ORMAINTAIN POSITION CERTIFICATION OR FACILITY RATING (FTOR) 241

Attachment 15— SAMPLE MEMORANDUM, CHANGE OF RECOMMENDED WITHDRAWAL 246

Attachment 16— ATC AFSC WITHDRAWAL PROCESS NARRATIVE FLOWCHART 248

Attachment 17— AFSC WITHDRAWAL CHECKLIST FOR CONTROLLERS WHO FAIL TO MAINTAIN 250

Attachment 18—(Added-AFGSC) AFGSC AIRFIELD STAFFING REQUIREMENTS 255

Chapter 1

GENERAL INFORMATION

1.1. HQ AFFSA (Air Force Flight Standards Agency) is the USAF's executive agent for terminal area Airfield Operations (AO) matters. As such, HQ AFFSA will work with the Federal Aviation Administration (FAA) to resolve AO procedural, training, standardization, and integration issues, and issue subsequent policies to the Major Commands (MAJCOM).

1.2. Scope and Purpose of this Instruction. This instruction provides guidance on managing and operating AO facilities and training AO personnel. Within the context of this instruction, AO is comprised of Air Traffic Control (ATC) and Airfield Management (AM) services. All AO flight personnel shall refer to this instruction for details regarding the technical aspects of their responsibilities. (T-1)

1.2.1. Operations at Contingency Locations. At contingency locations, the Senior Airfield Authority (SAA) or equivalent may authorize deviations to AO procedures outlined in this AFI to support tactical or combat operations/situations. Authority must not be delegated. For additional supplementary information, refer to Air Force Tactics, Techniques, and Procedures 3-4.4, *Contingency Airfield Operations* (CAO). (T-3)

1.2.1.1. In the interest of safety to airfield and flight operations, deviations to this AFI should be by exception only and include a risk management assessment. Factors to consider for deviations include but are not limited to the length of time the operation has been in place and available resources.

1.2.1.2. If time permits, or at the discretion of the SAA or equivalent, forward proposed deviations to the Air Operations Center (AOC) staff or equivalent for an operational review.

1.2.1.3. Provide the AOC staff, or equivalent an information copy of approved deviations to assist with establishing compliance priorities, providing oversight and developing AOR execution activities. (T-3)

1.2.2. Contract Locations. This AFI applies to contract locations as specifically outlined in the contract Statement of Work (SOW) and/or Performance Work Statement (PWS). Locations unable to comply with these criteria due to pre-existing SOWs are exempt until such time that the current contract expires.

1.2.2.1. Locations that exclude this AFI, shall specifically state rationale for the exclusion in the SOW. (T-2)

1.2.3. Overseas Locations. While Host Nation (HN) or international regulations adopted for USAF use in overseas areas take precedence, every effort should be made to conform to this instruction.

1.2.3.1. Host regulations and procedures apply to USAF AO personnel who augment a civil or foreign ATC or AM facility.

1.2.3.2. MAJCOMs must identify these procedures and international regulations in their supplement to this AFI. Refer conflicting procedures to HQ AFFSA prior to implementation.

1.2.4. USAF controllers who augment a facility operated by another branch of the US military will comply with the ATC regulations and procedures of the host service branch. (T- 0)

1.2.5. Use of this Instruction, Supplementation, and Application of FAA ATC Directives to the USAF. HQ AFFSA sets the policies and procedures for internal AO facility operations. MAJCOMs may supplement USAF standards and procedures specified in this instruction with prior HQ AFFSA approval. Applicable portions of FAA Order (FAAO) Joint Order (JO) 7210.3, *Facility Operation and Administration*, and FAAO 1900.47B, *Air Traffic Services Contingency Plan* have been incorporated into this instruction.

1.3. Waivers and Recommended Changes.

1.3.1. Waiver Authority. HQ USAF/A3O and HQ AFFSA are the waiver authorities for this instruction. All waivers will be submitted to HQ AFFSA/A3A (**hqaffsa.a3a@tinker.af.mil**) through the appropriate MAJCOM AO OPR for consideration. All waivers pertaining to safety of aircraft operations will be forwarded through the MAJCOM A3 to HQ AFFSA/A3A for HQ USAF/A3O consideration. **Note:** Waivers to this instruction will only be considered when deemed necessary for completion of assigned flying mission.

1.3.1. **(AFGSC)** Waivers and Recommended Changes. All new AF Form 679, *Air Force Publication Compliance Item Waiver Request/Approval*, waiver or renewal requests (excluding FAA waivers) shall be forwarded to the AFGSC A33S Airfield Operations Workflow (**a3.ao.airfieldoperations.1@us.af.mil**) NLT 60 days prior to expiration/expected implementation date.

1.3.1.1. Waiver authority for Tier 0: Non-AF authority (e.g. Federal Aviation Adminstration).

1.3.1.2. Waiver authority for Tier 1: MAJCOM/CC (delegable no lower than the MAJCOM/A3, with the concurrence of HAF/A3).

1.3.1.3. Waiver authority for Tier 2: MAJCOM/CC (delegable no lower than MAJCOM/A3).

1.3.1.4. Waiver authority for Tier 3: Wing/CC (delegable no lower than Group/CC or equivalent).

1.3.1.5. Waiver authority for Non-tiered compliance items targeted for functions above the wing or equivalent is AFFSA/XA.

1.3.2. Waiver Process.

1.3.2. **(AFGSC)** Requests for waivers to FAA policy shall be forwarded to AFGSC A33S Airfield Operations Workflow NLT 7 months prior to expiration/expected implementation date **(T-2).**

1.3.2.1. Process waiver requests IAW AFI 33-360, paragraph 1.9.5. (T-1) Units may use the AF Form 4058, *Airfield Operations Policy Waiver* to process waivers to this instruction.

1.3.2.2. If deemed necessary, submit additional data (e.g., Letters of Procedure (LOP), airspace maps, traffic patterns, airfield diagrams) to substantiate the waiver request.

1.3.2.3. AOF/CC will forward a copy of the approved waiver to AFFSA/XA (**hqaffsa.a3a@us.af.mil**) for publication OPR's situational awareness, consolidation/filing into the master waiver file, and to identify/track possible trends. (T-1)

1.3.2.4. Tier 0 waiver: Following a MAJCOM/CC (delegable no lower than MAJCOM Director) request, the appropriate MAJCOM functional OPR will submit the package to AFFSA/XA. AFFSA/XA will submit the package to the publication OPR (i.e. external agency/Non-AF authority) for concurrence/approval. Package results will be provided to the appropriate MAJCOM functional OPR.

Exception: Waivers to FAA publications must be coordinated with the MAJCOM OPR for Airfield Operations (AO) and the appropriate Air Force Representative (AFREP). (T-0) Submit the waiver package and Safety Risk Management Document (SRMD) through the MAJCOM OPR for AO to AFFSA/XA. (T-0) Upon AFFSA/XA concurrence to proceed, the AFREP will forward the waiver package and SRMD to FAA for processing. The AFREP will monitor the waiver process and inform the requesting unit, MAJCOM OPR for AO, and AFFSA/XA of FAA's determination. (T-0)

1.3.2.5. Tier 1 waiver: Following a MAJCOM/CC (delegable no lower than MAJCOM Director) request, the appropriate MAJCOM functional OPR will submit the package to AFFSA/XA. AFFSA/XA will submit the package to HAF/A3 (certifying official) for concurrence. Package results will be provided to the appropriate MAJCOM functional OPR.

1.3.2.6. Tier 2 waiver: Staff waiver requests in accordance with MAJCOM guidance. (T-2)

1.3.2.7. Tier 3 waiver: Staff waiver requests in accordance with Wing guidance. (T-3)

1.3.3. DELETED

1.3.3.1. DELETED

1.3.3.2. DELETED

1.3.4. Special Use Airspace (SUA). SUA issues are primarily managed by the MAJCOM OPR for Airspace Management. SUA waivers that impact terminal ATC operations must be coordinated with HQ AFFSA. (T-2) Approved waivers to USAF directives must be made available to all agencies affected by the waiver. (T-2)

1.3.5. Recommended Changes. Submit recommended changes to this AFI and FAA guidance through the MAJCOM OPR for AO to HQ AFFSA using AF Form 847, *Recommendation for Change of Publication.* (T-2)

1.4. Conflicting Directives. Units affected by FAA and other related AO directives not implemented by the USAF must request resolution from HQ AFFSA through their MAJCOM OPR for AO. (T-0)

1.5. Issuing New USAF AO Policy or Procedures. New policies or procedures will be implemented in accordance with AFI 33-360, *Publications and Forms Management* and posted on the HQ AFFSA Airfield Operations SharePoint website. (T-1)

1.5.1. AO staff personnel must utilize the HQ AFFSA Airfield Operations SharePoint website and elect to receive alerts for new message postings. (T-3)

1.6. FAA General Notices (GENOTs). HQ AFFSA will transmit FAA GENOTs via messages using the above procedures. Units that receive GENOTs that impact AO facilities through other than a HQ AFFSA released message, should contact HQ AFFSA through their MAJCOM for resolution.

1.7. Responsibilities:

1.7.1. HQ AFFSA will:

1.7.1.1. Establish USAF policies and procedures for providing AO services through publication of this AFI and corresponding volumes.

1.7.1.2. Publish AFI 13-213, *Airfield Driving*, AFI 13-202, *Overdue Aircraft* and AFI 13-207, *Preventing and Resisting Aircraft Piracy (Hijacking)* (FOUO).

1.7.1.3. Approve AO-related waiver requests in accordance with this AFI, coordinate on Document Change Proposals (DCPs), and request interpretation of FAA directives on behalf of the units.

1.7.1.4. Serve as lead DoD agency for the military flight data telecommunications system requirements. Establish DoD requirements and implementation guidelines in AFJMAN 11-213, *Military Flight Data Telecommunications System*.

1.7.1.5. Develop and publish AO officer and enlisted training guides and products.

1.7.1.6. Administer the USAF Annual AO Awards and Lt General Gordon A. Blake Aircraft Save Award Programs in accordance with AFI 36-2807, *HQ USAF, Deputy Chief of Staff (DCS), Operations, Plans, and Requirements Annual Awards Program*.

1.7.1.7. Post guidance to HQ AFFSA AO CoPs.

1.7.1.8. Develop educational programs, publications, and bulletins to manage and actively promote airfield safety (e.g., airfield driving, Foreign Object Damage (FOD) mitigation, etc.).

1.7.1.9. Evaluate and develop standards for training and procedures to support new technologies that enhance AO services.

1.7.1.10. Review and approve all supplements to this AFI.

1.7.2. MAJCOM OPR for AO will:

1.7.2.1. Work with the appropriate CFM, MAJCOM A1, and AFPC to ensure Airfield Operations Flights (AOF) are staffed in accordance with the Capabilities-Based Manpower Standard and that units receive their allocation of available manpower resources. (**Not applicable to ANG and AFRC**).

1.7.2.2. When necessary, develop supplements to this volume for MAJCOM-unique policies and procedures.

1.7.2.3. Review and provide endorsing comments on all AF IMT 4058s, and on waiver requests to airfield design criteria, markings, signs, and lighting forwarded for coordination by MAJCOM/A7 and/or Air Force Civil Engineering Support Agency (AFCESA).

1.7.2.4. Establish and conduct MAJCOM AO Annual Awards selection process and forward winners to HQ AFFSA no later than 1 March to compete at the USAF level in accordance with AFI 36-2807.

1.7.2.5. Establish and conduct semi-annual MAJCOM Air Traffic Control and Landing Systems (ATCALS) Review Board. The board, chaired by MAJCOM OPR for AO, provides MAJCOM division chiefs a forum to collectively review the status of MAJCOM ATCALS programs and jointly resolve issues. A desk-top study, as determined by the chairperson, may be held in lieu of a formal meeting. Meeting minutes will be sent to Lead Command OPR for ATCALS Requirements and Sustainment, all MAJCOM AO units (who will provide a copy to their communications, maintenance, and base programming offices), and other agencies as requested. MAJCOMs will determine if local unit meetings are required. Agenda items are located in **Attachment 6.**

Chapter 2

AIRFIELD OPERATIONS FLIGHT STAFF POSITIONS

2.1. Duty Titles. Duty titles are based on Unit Manpower Document (UMD) authorizations earned through the Capabilities-Based Manpower Standard. Failure to use authorizations as described and earned on the UMD could result in reduction of authorizations or removal of personnel. (**Not applicable to ANG and AFRC**).

2.1. (AFGSC) Duty Titles. Ensure AO personnel are accurately aligned and postured against appropriate manpower positions and unit type codes (UTC). **(T-2)**

2.1.1. Request a variance to the manpower standard when additional related responsibilities/workload levied on the AOF merit increased manpower authorizations. (T-2)

2.2. AOF Staff. The typical AOF staff is comprised of an Airfield Operations Flight Commander (AOF/CC); Airfield Operations Flight Operations Officer (AOF/DO); Airfield Operations Flight Systems Officer (AOF/SO); Airfield Manager (AFM); tower/radar facility Chief Controller (CCTLR); NCOIC, ATC Training (NATCT); NCOIC, ATC Standardization and Evaluation (NSE); NCOIC, Airfield Automation Manager (NAAM); Airfield Operations System Specialist (AOSS); Terminal Instrument Procedures (TERPS) Specialist (if not consolidated at MAJCOM); and/or civilian equivalents. The AOF/CC will appoint all staff members in writing prior to assuming duties. (T-3)

2.2.1. Airfield Operations Flight Commander (AOF/CC), or civilian equivalent. The AOF/CC is the wing's AO focal point, responsible for managing services provided by AOF personnel. When more than one 13MX officer is assigned, the senior officer will *normally* be designated the AOF/CC. Additional officers assigned to the AOF will be designated IAW paragraph 2.2.2.

2.2.1.1. ANG locations with AM and/or ATC can identify those managers as Air Traffic Managers or Airfield Operations Managers.

2.2.1.2. At locations where only USAF AM exists, the USAF does not provide ATC services, and a 13M is not authorized, the senior enlisted 1C7 or civilian equivalent will fulfill the responsibilities of the AOF/CC as outlined in this instruction. (T-3)

2.2.2. AOF/DO and AOF/SO. The AOF/DO and SO should focus on developing an understanding of flight operational and leadership issues, in addition to performing duties assigned by the AOF/CC.

2.3. DoD Civilians and Contractors. Note: MAJCOMs will supplement requirements for Host Nation/Local National personnel filling AO duty positions as required.

2.3.1. Local Bargaining Unit Agreement. At locations with GS civilian AO personnel assigned, managers and supervisors should review the local bargaining unit agreement available from Civilian Personnel Office. AFI 36-701, *Labor Management Relations*, contains the USAF procedures and guidance for managers and supervisors when dealing with employees represented by an exclusively recognized union. It assigns responsibilities to commanders, management officials, supervisors, Civilian Personnel Officers (CPOs), Labor Relations Officers (LROs), and Staff Judge Advocates (SJAs).

2.3.2. DoD and Contract Civilian AM Personnel.

2.3.2.1. For standardization, DoD and Contract civilian AM personnel will use the following duty titles in place of the military unique duty titles (e.g., NCOIC, Deputy, etc.) throughout this AFI: Airfield Manager (AFM), Assistant Airfield Manager (AAFM), Airfield Management Operations Manager (AMOM), Airfield Management Training Manager (AMTM) and Airfield Management Shift Lead (AMSL). (T-3) Qualifications for AM civilians are found in AFI 13-204v1, *Airfield Operations Career Field Development*.

2.3.2.2. When military staffing warrants, the MAJCOM OPR for AO may approve temporary appointments of otherwise qualified GS-2150/54s to AM positions for a period not to exceed 180 days in duration. This restriction protects professional development opportunities for active duty personnel who require AM management knowledge and skills. **Note 1:** Does not apply to facilities exclusively staffed by DoD civilian personnel.

2.3.2.3. Standard Core Personnel Documents (SCPD) designated for DoD civilian AM personnel, GS-2150/54-XX must be used for employment of GS-2150/54 personnel assigned to USAF AOF positions. (T-2) Specific SCPDs are established for DoD civilian AM personnel. Minor modifications may be necessary to address locally assigned duties/responsibilities. Guidance for developing/modifying CPDs/SCPDs is available on the AFPC web site at: ttp://ask.afpc.randolph.af.mil/ and in AFI 36-1401, *Position Classification*. (**Not applicable to ANG**)

2.3.2.4. SCPDs for DoD civilian AM personnel also list Knowledge, Skills, Abilities (KSA) required for designated positions. Applicants to GS-2150/54 vacant positions must address their expertise in meeting KSA criteria as part of the job application process. (T-2)

2.3.2.5. DoD civilian AM positions at CONUS locations are designated as Key Employees. This designation specifies that vacating the position during war or national emergency would seriously impair the mission as the incumbent has unique or scarce managerial or technical skills required by the wartime mission. Incumbents must be removed from their military recall status if alternatives for filling the position during an emergency are unavailable, as specified in AFI 36-507, *Mobilization of the Civilian Work Force*. (T-3)

2.3.3. DoD Civilian ATC Personnel.

2.3.3.1. For standardization, DoD civilian ATC personnel will use the following duty titles in place of the military unique duty titles (e.g., NCOIC, Deputy, etc.) throughout this AFI: (T-3) Air Traffic Manager (ATM); Controller-in-Charge (CIC); Airfield Operations Automation Manager (AOAM); ATC Training Manager (ATCTM); or Training and Standardization Manager (TSM). Qualifications for ATC civilians are found in AFI 13-204v1. **(Not applicable to ANG)**

2.3.3.2. When military staffing warrants, the MAJCOM OPR for AO may approve temporary appointments of otherwise qualified GS-2152s to CCTLR, NATCT, NSE, and TSN positions for a period not to exceed 180 days in duration. This restriction protects professional development opportunities for active duty personnel who require ATC

management knowledge and skills. **Note 1:** Does not apply to facilities exclusively staffed by civilian controllers.

2.3.3.3. Standard Core Personnel Documents (SCPD) designated for ATCS (Terminal), GS-2152- XX must be used for employment of GS-2152 personnel assigned to USAF AOF positions. (T-0) Specific SCPDs are established for tower, radar, Terminal Instrument Procedures (TERPS), or Automation Specialist duties. Minor modifications may be necessary to address locally assigned duties/responsibilities. Guidance for developing/modifying CPDs/SCPDs is available on the AFPC web site at: **http://ask.afpc.randolph.af.mil** /and in AFI 36-1401, Position Classification. (**Not applicable to ANG**)

2.3.3.4. SCPDs for ATCS (Terminal) also list (Knowledge, Skills, Abilities) KSA required for designated positions. Applicants to GS-2152 vacant positions should be required to address their expertise in meeting KSA criteria as part of the job application process. GS-2152 personnel must present ATCS and/or Control Tower Operator (CTO) certification (as applicable to the ATC facility position being filled) as a condition of hire prior to being accepted for employment. (T-0) **(Not applicable to ANG)**.

2.3.3.5. ATCS (Terminal) GS-2152 positions at CONUS locations are designated as Key Employees. This designation specifies that vacating the position during war or national emergency would seriously impair the mission as the incumbent has unique or scarce managerial or technical skills required by the wartime mission. Incumbents must be removed from their military recall status if alternatives for filling the position during an emergency are unavailable, as specified in AFI 36-507, *Mobilization of the Civilian Work Force*. (T-0) **(Not applicable to ANG)**

2.4. TERPS Specialist. At locations with unit-level TERPS responsibilities, the Operations Group Commander (OG/CC), or equivalent, is responsible for the base TERPS program. The AOF/CC will appoint a TERPS specialist to manage the local TERPS program. (T-3)

Chapter 3

OPERATION OF USAF AIRFIELDS

3.1. Operation of USAF Airfields.

3.1.1. Controlled Airfields. For the purposes of this instruction, airfields are considered controlled when the control tower is open.

3.1.2. Uncontrolled Airfields. For the purposes of this instruction, airfields are considered uncontrolled when the control tower is closed.

3.1.2.1. MAJCOM/A3s must approve flight operations at uncontrolled USAF airfields. Authority may be delegated no lower than the WG/CC. MAJCOM/A3s and/or WG/CCs (if delegated) shall address items in **Attachment 4** as part of a formal RM assessment before approving flight operations at uncontrolled USAF airfields.

3.1.2.1. **(AFGSC)** If not delegated to WG/CC, units shall forward all requests for MAJCOM/A3 approval of flight operations at uncontrolled USAF airfields to the AFGSC A33S Airfield Operations Workflow NLT 30 days prior to anticipated implementation date. Units will complete a formal Risk Management (RM) assessment using considerations in **Attachment 4** and forward the assessment with the request **(T-2).**

3.1.2.2. **(Added-AFGSC)** Units will include the following information when submitting requests for flight operations at uncontrolled USAF airfields:

3.1.2.2.1. **(Added-AFGSC)** Hours of operation.

3.1.2.2.2. **(Added-AFGSC)** Type of aircraft authorized and/or involved.

3.1.2.2.3. **(Added-AFGSC)** Designated runways and operating areas authorized for uncontrolled operations.

3.1.2.2.4. **(Added-AFGSC)** Published procedures in appropriate Flight Information Publications.

3.1.2.2.5. **(Added-AFGSC)** Common operating frequency.

3.1.2.2.6. **(Added-AFGSC)** Procedures to record common operating frequency.

3.1.2.2.7. **(Added-AFGSC)** Procedures to de-conflict traffic patterns with all airports within 10NM.

3.1.2.2.8. **(Added-AFGSC)** Establishing a responsible agent (Operations Duty Officer, etc.) for all organizations conducting uncontrolled operations.

3.1.2.2.9. **(Added-AFGSC)** Responsible agent must be present during uncontrolled operations.

3.1.2.2.10. **(Added-AFGSC)** Responsibilities and authority of responsible agent must be clearly defined.

3.1.2.2.11. **(Added-AFGSC)** A formal training plan/program must be established for training responsible agent.

3.1.2.2.12. **(Added-AFGSC)** Procedures for scheduling uncontrolled operations.

3.1.2.2.13. **(Added-AFGSC)** Procedures for briefing users on airfield conditions (construction, etc.).

3.1.2.2.14. **(Added-AFGSC)** Procedures for reporting and disseminating emergency information affecting airfield conditions (i.e. conditions created by uncontrolled operations that affect operations when airfield re-opens.)

3.1.2.2.15. **(Added-AFGSC)** Procedures for obtaining required weather support.

3.1.2.2.16. **(Added-AFGSC)** Procedures to educate vehicle operators on uncontrolled airfield operations and runway access.

3.1.2.2.17. **(Added-AFGSC)** Procedures to inform base agencies of commencement/ termination of uncontrolled operations.

3.1.3. Operations when "Essential Services" are not available. Operations when essential services (Fire/Crash, Medical, Weather, Security, ATC, AM) are not available require approval of the MAJCOM/A3 owning AO services. (T-2) Authority may be delegated no lower than the installation WG/CC. (T-2) WG/CCs shall address items in **Attachment 4** as part of a formal Risk Management (RM) assessment before approving flight operations when other than required essential services are available at USAF airfields and forward to MAJCOM/A3. (T-2) Requesting aircrew require appropriate approval through their parent MAJCOM chain of command. (T-1)

3.1.4. Auxiliary Airfields that are owned/contracted or operated by USAF. The services available at auxiliary airfields vary according to the flying mission of the owning unit. In accordance with paragraphs 3.1.1 and 3.1.2 auxiliary airfields with control towers are considered controlled; whereas, those with runway supervisory units only are considered uncontrolled. Control tower is defined as a facility with the required equipment and certified air traffic controllers. WG/CCs must complete a formal RM assessment for operations at auxiliary fields without the required essential services as described in paragraph 3.1.3 above and forward to MAJCOM/A3 for approval. (T-2)

3.1.4.1. Compliance with this instruction is required for all USAF owned/operated auxiliary airfields. The AFM or designated representative will work with Flight Safety, Civil Engineer Squadron (CES), Wing Scheduling and Standardization/Evaluations offices to develop an airfield inspection schedule for each active landing auxiliary airfield. (T-2)

3.1.4.2. At auxiliary airfields, a daily airfield check is required on the active landing surfaces prior to starting flying operations. (T-2)

3.1.4.2.1. A locally developed checklist/diagram (or electronic equivalents) must be used to conduct and document airfield checks. (T-2) Document and report all discrepancies and/or hazards identified during an airfield check for corrective action. (T-3)

3.1.4.2.2. Responsibilities for conducting airfield checks may be delegated to non-AO personnel (Fire Department, Supervisor of Flying (SOF), Runway Control Structure (RCS) personnel, etc.) working on the airfield.

3.1.4.2.2.1. All non-AO personnel performing an airfield check must be trained and certified by the AFM or designated representative. (T-2)

3.1.4.2.2.2. At a minimum, non-AO personnel must complete the Airfield Inspection and Maintenance, and Wildlife Hazard Management CBTs. (T-2)

3.1.4.3. A joint airfield inspection will be conducted on a quarterly basis at USAF owned/operated auxiliary airfields and should include representatives from AM, ATC, Wing Safety (SE), SOF, CES, and Security Forces. (T-3) The results of this inspection will be briefed at the Airfield Operations Board (AOB). (T-3)

3.1.4.4. The MAJCOM OPR for AO must identify specific requirements for auxiliary airfields in their supplements to this instruction.

3.1.5. Operation of Aircraft at Air Force Airfields.

3.1.5.1. Military aero club aircraft are treated as government owned military aircraft for liability purposes and for gaining access to military aerodromes. Aircraft privately owned by members of a military aero club require authorization to use military facilities (see AFI 10-1001, *Civil Aircraft Landing Permits*, and AFI 10-1002, *Agreements for Civil Aircraft Use of Air Force Airfields*).

3.1.5.2. Civil aircraft operating at USAF airfields must comply with procedures in AFI 10-1001, AFI 10-1002, and AFI 10-1003, *Use of Air Force Installations for Non-Government Business by Civil Air Carriers Participating in the Civil Reserve Air Fleet (CRAF) Program*. (T-3)

3.1.5.3. Foreign government aircraft operating at USAF airfields must comply with procedures in AFI 10-1801, *Foreign Governmental Aircraft Landings at United States Air Force Installations*, and have an approved aircraft landing authorization number (ALAN) prior to use, except for emergencies. (T-0)

3.1.6. Aircrew Violations of Airfield Restrictions. Process a written explanation of the incident through the host WG/CC to the WG/CC of the aircrew violating the restriction. (T-1) Provide an informational copy to the host MAJCOM and the MAJCOM owning the aircrew. (T-2)

3.2. AO Operating Requirements. AO facilities typically operate 16-24 hours per day with assigned personnel working rotating shifts to support the unit's primary flying mission. While Capabilities-Based Manpower Standard provides core manpower authorizations to support this flying mission, it does not provide additional manpower for personnel to support unit/base details and augmentees for base exercises, etc. For this reason, AOF personnel must not be used outside of their UMD authorized duties and responsibilities unless waived in accordance with AFI 36-2101, *Classifying Military Personnel (Officer and Enlisted)*. (T-1)

3.2. (AFGSC) AO Operating Requirements. In accordance with AFI 36-2101, *Classifying Military Personnel (Officer and Enlisted)*, units will not use Airmen outside of their CAFSC for more than 130 days in a 12-month period without Military Personnel Section (MPS), Classification's Flight approval. Additionally, do not use Airmen if they have an assignment limitation code (ALC) "O" and received an enlistment bonus, a selective reenlistment bonus (SRB), or who have a break in service without first requesting a waiver. Waiver requests to utilize Airfield Operations (AO) personnel who are under an assignment limitation code and bonus outside their UMD authorized duties will be submitted to AFGSC/A33S for coordination and further submission to HQ AFPC/DPAA for approval. Waiver requests must be in standard

MFR format and include: member's name, rank, AFSC, skill-level, mission and training impacts (e.g. degradation to facility manpower strength, affected programs, proficiency training plan etc.), whether any bonus or special duty assignment pay have been authorized and/or paid, and expected return to CAFSC date. Upon waiver approval, Flight Commanders shall track waivered personnel working outside the facility on the Airfield Operations Board (AOB) minutes **(T-2).**

3.2.1. Basic Allowance for Subsistence (BAS) Authorization. Facility rated and/or prior rated position certified controllers and qualified AM personnel assigned to a rotating shift schedule required to perform AO duties are authorized BAS due to assigned duties or unusual work hours. Commanders will validate BAS authorization in accordance with guidance established in DOD 7000.14-R, Volume 7A, **Chapter 25**, *DOD Financial Management Regulation—Subsistence Allowance*. (T-3)

3.3. Published Operating Hours. AO facilities remain open to support the base flying mission. Radar facilities that support the National Airspace System (NAS) may require 24-hour operations. MAJCOM/A3s establish airfield operating hours. MAJCOM OPR for AO will publish airfield operating hours in its supplement to this instruction. Units requesting to curtail hours must comply with paragraph 3.4. (T-2) The AOF/CC will ensure hours of operation are defined in the Airfield Operations Instruction (AOI) and published in the appropriate Instrument Flight Rules (IFR) Supplement. (T-2) **Note:** Publish airfield operating hours in FLIP only when less than 24 hours a day, 7 days a week. (T-2)

3.3. (AFGSC) Published Operating Hours. Table 3.2. lists the published airfield hours for AFGSC airfields: **(T-3).**

Table 3.2. (Added-AFGSC) AFGSC Airfield Hours

Barksdale AFB, LA: 24 hours (Daily), Closed (Holidays)
Minot AFB: 1200-0400Z (16 Hours) Monday through Friday,1500-2300Z (9 Hours) Sat/Sun, Closed on Holidays
Whiteman AFB: 1300-0500Z (16 Hours) Monday thru Friday, 1400-2300Z (10 Hours) Sat/Sun, Closed on Holidays
Dyess AFB: 1200Z Monday through 0600Z Sat, Closed Sat/Sun/Holidays.
Kirtland AFB: 1400-0200Z (13 Hours) Monday through Friday, 1500-2000Z (6 Hours) Saturday, Closed Sunday/Holidays.
Ellsworth AFB: 1400-0730Z (18.5 Hours) Monday through Thursday, 1400-0400Z (15 Hours) Friday, Closed Sat/Sun/Holidays.

3.3.1. The OG/CC may authorize the use of standby and on-call procedures for AO facilities. Outline response time requirements, periodic equipment checks, and notification methods in an LOP.

3.3.1.1. Standby: Time during operating hours when AO personnel are immediately available to return the facility to operations within the time limit the OG/CC specifies. Consider standby time as "duty time."

3.3.1.2. On-call: AO personnel must remain in the local area and be able to be contacted in the event it becomes necessary to open their respective facility outside of normal

operating hours. Personnel who are on-call must comply with Section 7.4., **ATC Restrictions and Duty Limitations**. Do not consider on-call time as duty time. (T-2)

3.3.2. On-call: The OG/CC may extend operating hours at bases where facilities are open less than 24 hours a day, as required, to meet short-term (no more than 30 days) mission requirements. After 30 days, AO staffs must coordinate with MAJCOM AO staff. (T-2)

3.4. Curtailing AO Services

3.4.1. "Open" Airfield. Unless NOTAM'd closed, an airfield is considered "open" during published operating hours when all essential services are available.

3.4.2. "Closed" Airfield. Unless NOTAM'd otherwise, an airfield is considered closed during periods outside of normal published operating hours when essential services are not available.

3.4.3. AO Facility Closures. MAJCOM/A3s approve AO facility closures that result in USAF-controlled terminal airspace being permanently or temporarily returned for FAA control. This does not apply to requests for holiday closures that are 96 hours or less, which is at the discretion of the WG/CC, with FAA supporting facility concurrence.

3.4.3.1. The overall impact on the supporting FAA facility must be given careful consideration when requesting FAA acceptance of terminal airspace, particularly when more than one USAF location/MAJCOM requires support from the same FAA Air Route Traffic Control Center. **Note:** The AOF/CC must ensure appropriate Notice to Airman (NOTAM) actions are taken. (T-0)

3.4.3.2. The AOF/CC shall notify MAJCOM OPR for AO and AFREP when a proposal to return airspace/curtail, or extend operating hours is under consideration. (T-0) This notification shall precede any negotiations outside USAF channels. To facilitate coordination with HQ FAA, include HQ AFFSA as coordination addressees on any proposals submitted to MAJCOM/A3s. (T-0)

3.4.4. Airfield Closures. MAJCOM/A3s approve airfield closures in excess of 96 hours. Airfield closures of 96 hours or less, such as holiday closures, are at the discretion of the WG/CC, through coordination with the FAA if terminal airspace will be impacted.

3.4.5. Procedures for imposing airfield restrictions and closures.

3.4.5.1. MAJCOM OPR for AO will establish procedures in their supplements to process (e.g., approve or deny) airfield restrictions and closures requests from subordinate bases, in addition to airfield restriction dissemination procedures.

3.4.5.1. **(AFGSC)** HQ AFGSC/A3 is the approval authority for all airfield closures exceeding 96 hours (to include days published closed), and OBO restrictions exceeding 6 months. Units must ensure proper staffing is complete and forward closure/restriction request to AFGSC A33S Workflow at least 45 days prior to closing or imposing any restrictions requiring approval. Request must include: duration of the closure (including start and end date/time), reason for closure, any operational restrictions, on-call capabilities to support Air Expeditionary Force (AEF) commitments, short notice contingencies, tenant unit missions, and if necessary, proposed workarounds **(T-2).**

3.4.5.2. Bases will:

3.4.5.2. **(AFGSC)** The Airfield Manager must promptly notify AFGSC/A33S by telephone or email for temporary closures related to hazardous weather or airfield incidents **(T-2).**

3.4.5.2.1. Notify the NAF/A3, host wing/tenant units and the parent MAJCOM OPR for AO airfield restrictions or closures. (T-1)

3.4.5.2.2. For approved airfield restrictions or closures that exceed 60 days, send a Flight Information Publication (FLIP) change request to Lead Command for Aeronautical Publications Standards using the DoD FLIP Revision Report. Include pertinent data such as the effective times, dates and the approval authority. (T-0) Note: Lead Command for Aeronautical Publications Standards will not publish FLIP changes for airfield restrictions or closures that exist less than 60 days. (T-1)

3.4.5.2.3. Enter approved airfield restrictions or closures into the DoD NOTAM system. (T-0) Develop procedures for entering closures or restrictions into the DoD NOTAM system when the decision to close or restrict is the responsibility of a civil airport manager at a shared-use airfields. (T-0)

3.4.5.2.4. If a restriction can be removed before the approved expiration date, send a NOTAM canceling the restriction and notify the MAJCOM OPR for AO and host wing/tenant flying units. Notify Lead Command for Aeronautical Publications Standards of the change if the restriction was published in the FLIP. (T-1)

3.5. Extended ATC Facility Closures or Equipment Limitations Affecting Controller Proficiency. When qualified controllers are unable to perform ATC duties for 30 or more consecutive days due to airfield closure, facility closure, or equipment limitations the following conditions will be met. (T-2)

3.5.1. The AOF/CC will notify the MAJCOM OPR for AO as soon as possible when a facility closure or equipment limitation is expected to exceed 30 or more consecutive days. (T-2)

3.5.2. The notification will include a brief description of events, expected length of facility closure, and a brief summary of anticipated use of manpower resources. (T-2)

3.6. Permanently Closing Runways. To permanently close a runway at an active USAF base, the unit shall: (T-1)

3.6.1. Obtain MAJCOM/A3 and HQ USAF/A3O approval unless the USAF has directed the action. Provide an information copy to HQ AFFSA. (T-1)

3.6.1. **(AFGSC)** Units shall forward all requests for permanent runway closures at AFGSC airfields to the AFGSC A33S Airfield Operations Workflow NLT 30 days prior to anticipated implementation date **(T-2).**

3.6.2. Before the effective date of an approved closure:

3.6.2.1. Notify the AFREP in the affected FAA region. (T-0)

3.6.2.2. Provide the Lead Command for Instrument Procedures with appropriate data for FLIP documents. (T-1)

3.6.2.3. Ensure the closed runway is marked IAW AFI 32-1042, *Standards for Marking Airfields*, Engineering Technical Letter (ETL) 04-2, *Standard Airfield Pavement Marking Schemes* and all airfield lighting circuits are disabled and tagged, "Do not energize." (T-1)

3.7. Activating Previously Closed Runways. Activating a previously closed runway, except for emergency situations, requires the following actions:

3.7.1. Obtain MAJCOM/A3 approval and coordinate through HQ AFFSA for HQ USAF/A3O approval. (T-1)

3.7.2. Coordinate with the AFREP of the appropriate FAA region. **Note:** Bases not under FAA jurisdiction must coordinate with appropriate host government agencies. (T-0)

3.7.3. Comply with Unified Facilities Criteria (UFC) 3-260-01 and 3-535-01, and AFIs 32-1042, 32-1043, *Managing, Operating, and Maintaining Aircraft Arresting Systems*, and 32-1044, *Visual Air Navigation Systems*. (T-1)

3.7.4. Provide the Lead Command for Aeronautical Publications Standards with appropriate data for inclusion in FLIP documents. (T-1)

3.8. Changes in Flying Mission.

3.8.1. MAJCOMs approve changes in the AO mission of their units after coordination with HQ AFFSA. AO mission changes may involve adjustments in manpower, equipment requirements, issues of operational impact, or military interface or services with civil or host nation operations. MAJCOMs coordinate changes in approach control services within the NAS with the AFREP at the appropriate FAA region.

3.8.2. When notified of a Mission Design Series (MDS) change, the OG/CC, with AOF/CC assistance, must ensure the following actions, as a minimum, are taken prior to the arrival of new aircraft:

3.8.2.1. Ensure all AO personnel are trained on new MDS aircraft characteristics. (T-2)

3.8.2.2. Develop simulator and/or static training scenarios for USAF controllers that emphasize integration of the new MDS aircraft operations with existing operations. (T-2)

3.8.2.3. Develop comprehensive pictorial and written guidance on new MDS, aircraft patterns, profiles and procedures. (T-2)

3.8.2.4. Review currently published instrument approach and departure procedures to ensure they will continue to meet mission requirements. As necessary, develop and process new or amended instrument procedures IAW AFI 11-230, *Instrument Procedures*. (T-2)

3.8.2.5. Update existing LOPs to include procedures for new MDS aircraft. (T-2)

3.8.2.6. AFM coordinates with base support agencies such as Civil Engineering (CE), Fire Department (FD), SF, SE, Aircraft Maintenance, Fuels Control and Wing Plans Office to determine if a modification is required to aircraft parking plans, taxi routes, and other support facilities (e.g., pavement and infrastructure additions, waivers, etc.). (T-2)

3.9. Notices to Airmen (NOTAM). The AOF/CC identifies a single AO facility, in writing, as the NOTAM monitor facility. The NOTAM monitor facility coordinates with AM to ensure

appropriate NOTAMs are sent to protect airspace when the control tower will be open outside of published airfield operating hours, to advise of non-published airfield closures, and to ensure notification of ATCALS interruptions and malfunctions. (T-2)

3.10. Unmanned Aircraft Systems (UAS) Operations.

3.10.1. Capabilities and Limitations by Group. **Table 3.1** identifies specific capabilities and limitations associated with current UAS/Remote Piloted Aircraft (RPA). These categorize the entire DoD UAS/RPA family in a joint context. Below are some generalities of each group.

3.10.1.1. Group 1.

3.10.1.1.1. Capabilities. Group 1 UAS are typically hand-launched, self contained, portable systems employed at the small unit level or for base security. They are capable of providing "over the hill" or "around the corner" type reconnaissance and surveillance. Payloads are generally fixed electro-optical infrared (EO/IR), and they have a negligible logistics footprint.

3.10.1.1.2. Limitations. Group 1 UAS typically operate within the operator's line of sight (LOS) at low altitudes, generally less than 1200 feet AGL and have a limited local endurance.

3.10.1.2. Group 2.

3.10.1.2.1. Capabilities. Group 2 UAS are typically medium-sized, catapult-launched, mobile systems that usually support brigade and below intelligence, surveillance and reconnaissance/reconnaissance surveillance and target acquisition (ISR/RSTA) requirements. These systems operate at altitudes less than 3500 feet AGL with a local to medium range. They usually operate from unimproved areas and do not usually require an improved runway. Payloads may include a sensor ball with EO/IR and a laser range-finder/designator (LRF/D) capability. They usually have a small logistics footprint.

3.10.1.2.2. Limitations. They may also have limited range and endurance.

3.10.1.3. Group 3.

3.10.1.3.1. Capabilities. Group 3 UAS are larger systems than Group 1/2 UAS. They operate at medium altitudes and usually have medium to long range/endurance. Their payloads may include a sensor ball with EO/IR, LRF/D, synthetic aperture radar (SAR), moving target indicator, signals intelligence (SIGINT), communications relay, and chemical, biological, radiological, nuclear and high-yield explosives (CBRNE) detection. Some systems may be weaponized. They usually operate from unimproved areas and may not require an improved runway.

3.10.1.3.2. Limitations. Group 3 UAS typically have decreased endurance when carrying weapons. The logistics footprint typically includes ground support equipment.

3.10.1.4. Group 4.

3.10.1.4.1. Capabilities. Group 4 UAS/RPA are relatively large systems, operate at medium to high altitudes, and have extended range/endurance. Group 4 payloads

may include EO/IR, radars, lasers, communications relay, SIGINT, automatic identification system (AIS), and weapons.

3.10.1.4.2. Limitations. Group 4 RPA typically have decreased endurance when carrying weapons. Fixed-wing RPA normally require improved areas for launch and recovery (e.g., runway). Group 4 UAS/RPA logistics footprint may approach that of manned aircraft of similar size. Group 4 UAS/RPA typically have robust airspace operations requirements. For those Group 4 UAS/RPA that typically operate beyond line of sight (BLOS), lack of satellite communications (SATCOM) could force LOS operations.

3.10.1.5. Group 5.

3.10.1.5.1. Capabilities. Group 5 UAS/RPA are typically the largest systems, operate in the medium to high altitude environment, and typically have the greatest range/endurance and airspeed. They perform specialized missions including broad area surveillance and penetrating attacks. Group 5 payloads may include EO/IR, radars, lasers, communications relay, SIGINT, AIS, and weapons.

3.10.1.5.2. Limitations. Group 5 RPA require improved areas for launch and recovery. The logistics footprint may approach that of manned aircraft of similar size. Group 5 UAS/RPA typically have the most stringent airspace operations requirements. For those Group 5 UAS/RPA that typically operate BLOS, lack of SATCOM could force LOS operations.

Table 3.1. UAS/RPA Categories

UAS Category	Maximum Gross Takeoff Weight (lbs)	Normal Operating Altitude (ft)	Speed (KIAS)	Current/Representative UAS examples, not all inclusive
Group 1	0-20	< 1200 AGL	100 Kts	WASP III, TACMAV RQ-14 A/B, BUSTER, BATCAM, RQ-11B, FPASS, RQ-16A, POINTER, AQUA/TERRA PUMA
Group 2	21-55	< 3500 AGL	< 250	SCAN EAGLE, SILVER FOX, AEROSONDE
Group 3	< 1320	< 18,000 MSL		RQ-7B, RQ-15, XPV-1, XPV-2
Group 4	> 1320		Any Airspeed	MQ-5B, MQ-8B, MQ-1A/B/C
Group 5	> 1320	> 18,000 MSL		MQ-9A, RQ-4, RQ-4N

3.10.2. UAS Airfield Operations.

3.10.2.1. Specific procedures for local UAS operations must be published in the AOI and any other appropriate LOPs. Address the procedures listed, proposal, as well as site specific procedures/data, NOTAM requirements, emergency recall of airspace or required landing of UAS, altitude caps, and other issues specific to base flying operations. (T-2)

3.10.2.2. The safety of manned aircraft will take precedence over unmanned aircraft in an emergency situation.

3.10.2.3. To the maximum extent possible, AO personnel will handle Group 4 and 5 RPA operations in the same manner as manned flights. Group 1, 2, and 3 UAS will generally have segregated airspace assigned to operate in that does not conflict with the normal flow of air and ground traffic. (T-2)

3.10.2.4. UAS/RPA Pilot/Operator AO Familiarization. When providing local AO orientation training to UAS/RPA pilots/operators, consider the UAS/RPA pilot/operator qualifications when deciding on the length of training required. **Note:** Group 4 and 5 RPA pilots/operators will generally be rated pilots and have a greater understanding of AO procedures compared to Group 1, 2, and 3 UAS pilots/operators.

3.10.2.5. Locations that support UAS operations must publish a FLIP advisory to that effect. **Note:** Example FLIP entry – "Use extreme caution for extensive UAS ops in the vicinity." (T-2)

3.10.2.6. Airfield Markings and Signage. All changes to airfield signage/markings along established UAS taxi routes will be coordinated with UAS Ops prior to changes being made. (T-2)

3.10.2.7. Flight Planning. Flight Plans (DD Form 175, *Military Flight Plan* and 1801, *DoD International Flight Plan*) will be filed for UAS flights, as applicable. **Note:** UAS designations in the "Aircraft Type" section of DD175 and 1801 flight plans are not recognized by the Air Route Traffic Control (ARTCC) host computer. Therefore, include the UAS designation in the remarks section of all IFR flight plans. For additional guidance see the *General Planning Guide*. (T-2)

3.10.2.8. Emergency Divert Base Designation. If designated as an Emergency Divert Base for UAS, AOF/CC will include all such procedures in the AOI. (T-2)

3.10.2.8.1. Notify MAJCOM OPR for AO if contacted to be an Emergency Divert Base. (T-1)

3.10.2.8.2. Include procedures to notify the respective Operations Center of any/all changes in airfield status. (T-1)

3.10.2.8.3. Include towing procedures and coordination. (T-2)

3.10.2.9. UAS pilots/operators will pre-coordinate all UAS missions with AO unless addressed in an LOP. (T-3)

3.10.2.9.1. UAS mission commanders, pilots, or SOFs will advise ATC of initiation and completion of flight operations. (T-3)

3.10.2.10. Disaster Relief Operations. The FAA issued a waiver allowing the NORTHCOM Joint Force Air Component Commander (JFACC) to operate UASs in direct support of disaster relief operations. The Certificate of Authorization (COA) for

UAS surveillance support above the geographic dimensions of a Disaster Relief Temporary Flight Restriction must be issued by the FAA IAW 14 CFR 91.137. (T-0)

3.10.2.11. Contingency Operations. Establish procedures in accordance with published Special Instructions (SPINs). (T-3)

3.10.2.11.1. Crash grid map should be used to develop flight sectors for UASs. However, until a crash grid map is available, utilize the best data available for the contingency location. Additionally, traditional approach/departure corridors may not be used in a tactical environment.

3.10.2.12. Radio check between UAS/RPA pilot/operator and ATC will be conducted prior to operations. (T-3)

3.10.2.12.1. All communications between ATC and UAS/RPA pilot/operator will be accomplished on designated primary and/or alternate ATC frequencies. (T-3) Secondary/backup communications and/or telephone connectivity will be pre-coordinated. (T-3)

3.10.3. AM Procedures.

3.10.3.1. AM will pass all airfield status changes to UAS Ops in a timely manner. (T-1)

3.10.3.2. UAS Bed Down.

3.10.3.2.1. Coordinate with CE, SE, and TERPS to ensure that UAS bed down locations, including shelters/hangars and communication towers are sited IAW with UFC 03-260-01 and TERPs criteria. (T-3)

3.10.3.2.2. FOD Prevention. Coordinate with UAS/RPA unit(s) to incorporate established UAS/RPA taxi routes into the airfield sweeping schedule/plan as required. (T-2)

3.10.3.2.3. Live Ordinance. Coordinate with CE, SE, Security Forces (SF), Transient Alert (TA), Maintenance Operations Control Center (MOCC), and flying units to designate areas for loading, unloading, arming and de-arming UAS. **Note:** For airfields that do not have designated areas for loading, unloading, arming and de-arming, refer to paragraph 15.1.1.3.39. (T-1)

3.10.3.3. Airfield Driving. All UAS support personnel that need to drive on the airfield must receive Airfield Drivers Training. Additionally, the Airfield Manager will incorporate UAS familiarization training into the Airfield Drivers Training Program. **Note:** Some UAS require special launch and recovery operations. Coordinate with ATC and UAS Ops to establish procedures for “chase” vehicles entering the Controlled Movement Area (CMA)/runway to conduct launch and recovery activities. Include these procedures in the local AOI. (T-1)

3.10.3.4. Arresting Gear Configuration. Due to the risk of damaging fragile landing gear, UAS cannot taxi over arresting gear in the raised position. At locations where arresting gear is installed, establish procedures for arresting cable re-configuration to allow for UAS launch and recovery operations. (T-1)

3.10.4. ATC Procedures.

3.10.4.1. Describe UAS/RPA to other aircraft by stating “unmanned aircraft/unmanned (TYPE).” (T-1)

3.10.4.2. Aircraft Category: For the purpose of ATC separation and sequencing, classify UAS as “Category III”, subject to change dependent on the COA or appropriate guidance. (T-1)

3.10.4.3. Prior to commencing and at the conclusion of UAS operations, ATC facilities shall advise adjacent approach control facilities that UAS operations are being conducted or terminated. (T-0)

3.10.4.4. Automatic Terminal Information Service (ATIS) procedures. The ATIS must be updated to reflect when UAS operations are conducted and when they terminate. (T-3)

3.10.4.4.1. Include in the ATIS broadcast remarks that "unmanned aircraft operations are in progress.” This advisory is required once a UAS requests to taxi or launch, and 15 minutes prior to its estimated time of arrival, if operating outside of the terminal airspace. (T-3)

3.10.4.4.2. Terminate advisory when UAS operations are complete; UAS is not returning for over one hour, or when the UAS lands, exits the runway, and no longer poses a potential impact to taxi operations. (T-3)

3.10.4.5. Separation and Sequencing.

3.10.4.5.1. UAS cannot be instructed to follow another aircraft or UAS.

3.10.4.5.2. Visual Separation. Use of visual separation between UAS and manned aircraft or UAS and UAS is not authorized. This does not restrict the tower controller's ability to visually separate aircraft.

3.10.4.5.3. Special Visual Flight Rules (SVFR) is not authorized with UAS.

3.10.4.5.4. Simultaneous Same Direction. All UAS will be treated as “All others” in accordance with FAAO JO 7110.65. (T-0)

3.10.4.5.5. Preventative Control. May only be applied in accordance with FAAO JO 7110.65.

3.10.4.5.6. Issue cautionary wake turbulence advisories, and the position, altitude, and direction of flight to landing UAS/RPA pilot/operator, if in your opinion, wake turbulence may have an adverse effect on it. (T-0)

3.10.4.5.6.1. Wake turbulence rules cannot be waived by the UAS/RPA pilot/operator.

3.10.4.6. During UAS lost link, the control tower may activate the Primary Crash Activation System (PCAS). However, it may not require the same level of rescue services provided for normal emergencies. Specify local procedures detailing the required rescue services for UAS lost link emergencies. (T-1)

3.10.4.6.1. If lost link occurs, UAS/RPA pilot/operator will immediately notify ATC with the following information, if applicable: (T-1)

3.10.4.6.1.1. Time of lost link.

3.10.4.6.1.2. Last known position.

3.10.4.6.1.3. Altitude.

3.10.4.6.1.4. The direction of flight.

3.10.4.6.1.5. Confirm execution of lost link procedures.

3.10.4.6.1.6. Confirm pilot/observer has visual contact with UAS/RPA.

3.10.4.6.2. In the event of lost link, lost communication between UAS/RPA pilot/operator and ATC or lost communication between UAS/RPA pilot/operator and observer, ATC will do the following, if applicable: (T-1)

3.10.4.6.2.1. Cease aircraft launches until status of affected UAS is determined.

3.10.4.6.2.2. Recover other UAS as appropriate.

3.10.4.6.2.3. Issue advisories and ATC instructions as appropriate to ensure safe operations for all aircraft.

3.10.4.6.2.4. Sterilize predetermined UA Zone.

3.10.4.7. NORDO Operations. ATC will:

3.10.4.7.1. Notify UAS/RPA pilot/operator of any known NORDO aircraft. (T-1)

3.10.4.7.2. UAS/RPA pilot/operator, assisted by ATC, will determine the best method to separate UAS/RPA and NORDO aircraft. (T-1) Examples of separation methods:

3.10.4.7.2.1. UAS may proceed to UA zone and hold.

3.10.4.7.2.2. Cease operations and land if it will not aggravate the situation.

3.10.4.7.2.3. Altitude deconfliction.

Chapter 4

AO FLIGHT MANAGEMENT AND PROGRAMS

4.1. Local Operating Procedures (LOPs). All regulatory guidance describing local AO services must be published in an LOP such as a LOA, Operations Letter (OL), flight or facility Operating Instruction (OI), or Operations Plan (OPLAN). LOPs may be internal to the flight or a specific facility, between two or more base agencies, or between wing agencies and external agencies such as the FAA or another operational wing. **Note:** Changes to existing LOAs, MOUs, and facility OIs must be converted to or integrated into the applicable LOP within 180 days after the date of the memorandum or the guidance will no longer be in effect. (T-2)

4.1.1. Approval Authority and Functional Review. The level of signature depends on the type of LOP being written or negotiated. The senior operational commander for the signatory agencies should approve and sign for their organization.

4.1.1. **(AFGSC)** Prior to LOP submission for AFGSC approval, AOF/CC's should ensure all appropriate stakeholder coordination (Wing and below) has been completed. Submit final draft LOPs to the AFGSC A33S Airfield Operations Workflow. Normal review time for LOPs (except Wing Airfield Operations Instruction (AOI) and Wing Airfield Driving Instruction (ADI)) is 45 days. Normal review time for AOI and ADI is 60 days **(T-2).**

4.1.1.1. MAJCOM OPR for AO must complete a functional review of all LOPs directing AO services prior to implementation. LOPs that are administrative in nature do not require functional review. AOF/CCs will send the LOP with the appropriate attachment from this instruction prior to submitting the final draft to the approval authority for signature. (T-2)

4.1.1.2. LOPs that address AO services, training, and/or operations with host nation agencies must be approved by the MAJCOM OPR for AO prior to implementation. This review ensures that such LOPs are in compliance with federal, USAF, MAJCOM, and host nation policies. When forwarding LOPs for approval, attach a cover letter that describes the purpose/background and/or rationale for changes. **Note:** Affected MAJCOMs must establish procedures in their supplement to this instruction on how this process will be conducted. Additional guidance is provided in AFI 51-701, *Negotiating, Concluding, Reporting, and Maintaining International Agreement*s. (T-2)

4.1.2. Standard LOPs.

4.1.2.1. Airfield Driving Instruction (ADI). The ADI is a stand-alone document that establishes a base's Airfield Driving Program. The Senior Operational Commander is the local signatory for the ADI, and the MAJCOM OPR for AO is the final approval authority for the ADI. Requirements for the ADI are available in AFI 13-213, *Airfield Driving*.

4.1.2.2. Airfield Operating Instruction (AOI). The AOI provides guidance regarding airfield and terminal environment activities which directly affect flying operations. It is the primary source document for describing local ATC, airfield, and flying operations applicable to base assigned aircrews, such as Visual Flight Rules (VFR) and radar traffic patterns, In-Flight Emergency (IFE) response procedures, local aircraft priorities, etc..

Guidance on format and content of AOIs is provided in, Attachment 2. The Senior Operational Commander is the local signatory for the AOI, and the MAJCOM OPR for AO is the approval authority. **Note:** MDS-specific instructions may direct information required in the AOI to also be published in a local 11-series instruction. AOF/CCs must work with flying standardization and evaluation offices to minimize duplication and ensure published procedures do not conflict. (T-2)

4.1.2.3. Training OIs (TOIs) must be developed by the AM and ATC training personnel to establish policy and procedures for implementing and defining AM and ATC training program responsibilities. (T-1) The TOIs must expand those areas where further explanation is required and standardize local training procedures. (T-1) Each unit must develop, implement, and administer each program in accordance with this instruction, AFI 36-2201, *Air Force Training Program*, and AFMAN 36-2234, *Instructional System Development*. (T-1) The TOIs should not restate training requirements, procedures, or responsibilities already published. Requirements for the ATC and AM TOIs can be found in Chapter 13 and **Chapter 19**, respectively. (T-1) The MAJCOM OPR for AO is the approval authority for TOIs. (T-2)

4.1.2.4. Flight or Facility OIs are established to regulate and standardize operational and administrative practices. Operational OIs are approved by the MAJCOM OPR for AO and administrative OIs are approved by the AOF/CC or respective facility managers.

4.1.2.5. LOAs are established between USAF units or agencies on a particular base and a non-USAF agency from the base or any unit or agency from another location. Routinely, LOAs are established between a supported wing and an FAA Terminal Radar Approach Control (TRACON) or FAA Air Route Traffic Control Center (ARTCC). Guidance on format and content of LOAs is provided by FAAO JO 7210.3. LOAs with the FAA should be coordinated with the Air Traffic Representative (ATREP) assigned as liaison with the USAF facilities involved and reviewed by the AFREP at the Service Area office. The MAJCOM OPR for AO is the approval authority for LOAs.

4.1.2.6. OPLANs provide guidance for contingency/wartime operations. When applicable, AO tasks are addressed in the OPLAN annex. Guidance on format and content of OPLANs is contained in AFI 10-401, *Air Force Operations Planning and Execution.* OPLANS are normally managed by the Wing Plans Office though the AOF may be appointed as the OPR for certain OPLANS pertaining to airfield operations, e.g. snow removal or stop alert plan. The AOF/CC will review all OPLANs for AO tasks and prepare a plans brief that includes all AO tasks in that OPLAN. The plans brief will be submitted to the MAJCOM OPR for AO for review unless the AOF/CC is the designated OPR for the entire plan. (T-2) The WG/CC is the approval authority for OPLANS. (T-3)

4.1.2.7. Operations letters are established between AO facilities or between an AO facility and another base agency to supplement operational or procedural instructions and to standardize operations. Operations letters describe special operating conditions or AO procedures that are unique to certain locations. The AOF/CC shall ensure operations letters are established covering tower/radar coordination procedures and ATCALS restoral and maintenance procedures. The MAJCOM OPR for AO is the approval

authority for operations letters between AO facilities and operations letters between AO facilities and other base agencies. (T-2)

4.1.3. Implementing and Maintaining LOPs.

4.1.3.1. Upon obtaining the appropriate level of approval for an LOP, incorporate any required revisions and prepare the LOP in final form. Establish an effective date that allows a minimum of 30 days for familiarization for all affected agencies and pre-implementation actions after finalized agreement is signed. Distribute copies of the signed LOP to all affected agencies or post to the appropriate website. (T-2)

4.1.3.2. Within 30 days of implementing a new LOP, the AOF/CC will provide the LOP and current index to the MAJCOM. (T-2)

4.1.3.3. LOPs must be reviewed by the AOF/CC annually and updated as appropriate. (T-0) The AOF/CC shall maintain a comprehensive library of all current applicable LOPs and indexes in the ATC facilities and AM Ops that are available to all AOF personnel. (T-1) The index must include the subject/title, effective date of each LOP, MAJCOM approval date, and date of annual review.(T-1)

4.1.3.3. **(AFGSC)** AOF/CCs will update LOP indexes by uploading the signed and approved LOP, in addition to the subject/title, effective date of each LOP, MAJCOM approval date, and date of annual review on the AFGSC Airfield Operations SharePoint site. AOF/CC's will review LOP indexes annually and forward the completed index to AFGSC A33S Airfield Operations Workflow NLT the last duty day of February **(T-2).**

4.2. Airfield Operations Board (AOB). This board provides a forum for discussing, updating, and tracking various activities associated with support of the flying mission. The AOB will convene quarterly. (T-1)

4.2.1. The board is chaired by the Wing CV or designated representative. (Not to be delegated lower than the OG/CC)

4.2.2. Board membership will be published in the AOI, and shall include the OG/CC, Mission Support Group Commander (MSG/CC), and representation from flying organizations, Wing Stan/Eval, flight safety, Operations Support Squadron Commander (OSS/CC), AOF Staff (ATC, AM, NAAM, and TERPS), communication units, CES, appropriate FAA or host nation ATC facilities, base weather, aero club manager (if applicable), command post (CP), ATCALS maintenance operations, and the airspace manager, and any others as deemed necessary by the AOB Chairperson. (T-3)

4.2.3. The AOF/CC is the focal point for scheduling AOB meetings, preparing the agenda, and recording the minutes. The agenda shall include mandatory items and any other pertinent issues the AOB Chairperson deems appropriate. As a minimum, the agenda and minutes will include items listed in **Attachment 3** (as applicable to each location).

4.2.3.1. Distribute the agenda to board membership prior to the scheduled meeting so attendees have time to prepare for their particular discussion items. Indicate the base level OPR for each discussion item on the agenda. (T-3)

4.2.3.2. AOB Chairperson must sign and approve release of AOB minutes for dissemination. **Note:** The AOB Chairperson may delegate the authority to sign/release AOB minutes in writing to the OG/CC. (T-3)

4.2.3.3. If there is no discussion associated with a particular mandatory item, annotate it As "N/D" in the minutes. (T-3)

4.2.3.4. When AOB minutes include information from an AO or IG inspection report (e.g. CRITICAL or SIGNIFICANT deficiencies), the minutes must be marked "FOR OFFICIAL USE ONLY." (T-3)

4.2.3.5. Distribute AOB minutes within 20 workdays from the time the AOB convenes, to all board members and the commanders of represented base agencies, to command levels, MAJCOM, and the AFREP of the servicing FAA region. (T-0)

4.2.3.5. **(AFGSC)** Post AOB minutes to the AFGSC Airfield Operations SharePoint site. Name the files using the following format: ICAO_YQTR_CY_AOB. (i.e., KMIB_4QTR_16_AOB) **(T-2).**

4.3. AOF Training Review Board (TRB) (Not applicable to AFRC and RAF Fairford). The AOF/CC shall conduct a monthly TRB to monitor and document the training status of AOF personnel. The AOF/CC shall approve published board minutes and forward a copy to appropriate MAJCOM OPR for AO no later than the 15th day of the month. **Note 1:** AO inspection discrepancies from MAJCOM or IG reports may be discussed in TRB minutes, however , the minutes must be marked "FOR OFFICIAL USE ONLY." **Note 2:** ANG, AFSPC, Morón AB, Creech, Clover and Tonopah will conduct TRBs on a quarterly basis. (T-1)

4.3. (AFGSC) AOF Training Review Board (TRB) (Not applicable to AFRC and RAF Fairford). AOF/CCs will use the approved AFGSC TRB minutes' template to document TRB minutes. Post TRB minutes to the AFGSC Airfield Operations SharePoint site. Name the files using the following format: ICAO_MON_CY_TRB. (i.e., KBAD_JAN_16_TRB) **(T-2).**

4.3.1. Agenda. The NCOIC, Air Traffic Control Training/Training Standardization NCOIC (NATCT/TSN) and NCOIC, Airfield Management Training (NAMT) shall prepare for the TRB with current data from trainees' records, facility logs, inputs from CCTLR(s) and the AFM, etc. As a minimum, the agenda will include the items listed in Attachment 5 (as applicable to each location). (T-3)

4.4. AO Manning. AOF/CCs must closely monitor AO facility manning levels to ensure uninterrupted services are provided to support the flying mission. When AO facility staffing levels are forecasted to drop (assigned/qualified/usable manning) and have the potential to impact the local flying mission, the AOF/CC or OSS/CC shall take the following actions to mitigate its impact after discussing with senior leadership (OG/CC or WG/CC). (T-2)

4.4.1. Return medically qualified personnel assigned to other base/organizational duties (such as first sergeant or chief enlisted manager) to AO facilities. (T-2)

4.4.2. Curtail all additional duties, e.g. unit/organizational additional duties. (T-2)

4.4.3. Exempt personnel from local exercise taskings not involving AO services, e.g. facility evacuations, facility security guards, and damage assessment. (T-2)

4.4.4. During known periods of low traffic density, combine ATC positions to reduce the number of controllers on shifts to afford adequate controller staffing during peak flying periods. (T-2)

4.4.5. During periods of low flying activity, pursue a waiver to the AM shift-staffing requirement.

4.4.6. Use a senior controller concept where possible for all ATC facilities during periods of non- peak flying.

4.4.7. Reduce ATC seven-skill level staffing to one per shift, unless a variance requires additional requirements.

4.4.8. Extend the ATC duty day to 10-hour shifts and/or six/one duty day rotation schedule and/or reduce the Wing flying schedule, commensurate with available ATC staffing. Extend the AM duty day to 12-hour shifts and/or six/one duty schedule. **Note:** To facilitate shift rotations and crew rest requirements, this activity should be forecasted at least 2 weeks in advance.

4.4.9. Utilize dual-certified personnel from other facilities, the facility chief controller, and all other personnel who hold certifications to work in the affected facility.

4.4.10. Cancel leaves, PME attendance, and non-essential TDYs.

4.4.11. AO personnel performing duties outside their controlled Air Force Specialty Code (AFSC) beyond 130 days during a 12 month period require a waiver to AFI 36-2101. Track personnel working outside the facility, until return, on the AOB minutes along with a status of the waiver.

4.4.12. **(Added-AFGSC)** Post updated manning documents to the AFGSC A33S Airfield Operations SharePoint site NLT the 10th of each month using the AFGSC format posted on the SharePoint site. Notify AFGSC A33S Workflow of forecasted manning concerns as soon as possible **(T-2).**

4.5. Critical Manning Options. When a facility reaches critical manning, the following additional actions should be taken to mitigate the impact on flying operations. These actions require the involvement and support of base leadership from the AOF/CC to the WG/CC, MAJCOM, and the FAA regional AFREP when support of adjacent FAA facilities is required. MAJCOM AO staffs must ensure the AFREP is advised of critical manning issues that may require FAA support in their respective region. (T-0)

4.5.1. Implement all actions in paragraph 4.4. above.

4.5.2. Curtail ATC services, such as multiple precision approach radar capability, monitoring approaches during visual meteorological conditions, etc.

4.5.3. Request MAJCOM relief from external visits/inspections affecting AO facilities.

4.5.4. Curtail AO facility operating hours and temporarily return the airspace to the FAA (or host nation), in accordance with paragraph 3.4.

4.5.5. NOTAM the facility closed and cease operations according to procedures agreed to in the FAA parent facility contingency plan, established in accordance with FAAO JO 1900.47, *Air Traffic Services Contingency Plan*.

4.6. Actions Following an Aircraft Mishap. Do not disclose information related to aircraft mishaps/incidents except as outlined below.

4.6.1. The AOF/CC shall coordinate on and off base mishap notification procedures to ensure appropriate base agencies/senior leadership are notified of a mishap in a timely manner. To ensure ATC facilities are appropriately focused on mishap response activities and control of aircraft, only notification procedures directly associated with timely relay of data and mishap response activities should be delegated to controllers in the ATC facilities. (T-1)

4.6.2. CCTLRs will develop a facility mishap notification checklist to provide mishap response guidance to controllers on duty. The ATC Watch Supervisor (WS) or Senior Controller (SC) initiates the checklist and ensures completion of the mishap notification checklist. Facility checklists should contain procedures for accomplishing the following items as a minimum: (T-2)

4.6.2.1. Notify the CCTLR and/or AOF/CC that a mishap has occurred.

4.6.2.2. Coordinate facility and runway status with other ATC agencies.

4.6.2.3. Request an aircraft mishap local (SPECIAL) weather observation at non-automated locations or when automated systems are operating in back-up mode.

4.6.2.4. As directed, provide airspace sterilization over crash site.

4.6.2.5. Notify ATCALS maintenance to check equipment performance, if USAF ATCALS were involved.

4.6.2.6. Initiate NOTAMs, as required.

4.6.2.7. Safeguard written facility records, including events log, position logs, flight data strips, and weather data. As soon as feasible, remove, label, store, and safeguard pertinent digitally recorded data, cassettes, and/or discs. Notify responsible TERPS authority so that all files contained within the Instrument Procedures Package and any other documentation associated with the incident instrument procedure in use at the time can be preserved.

4.6.2.8. Manning permitting, provide position relief to controllers who were on duty at the time of the mishap. The WS/SC determines the optimal time for position relief, giving consideration to continuity of services for mishap response support and human factors impact on controllers on duty at the time of mishap. If the WS/SC suspects a controller may have contributed to the mishap, the controller must be relieved from position immediately. (T-1)

4.6.3. As soon as possible after being notified of an aircraft mishap, the AOF/CC or CCTLR will assess controller involvement. If the AOF/CC or CCTLR suspects a controller's performance contributed to a mishap: (T-1)

4.6.3.1. Remove the controller from ATC duties pending a flight surgeon's evaluation. Prompt evaluation by the flight surgeon is essential to accurately assess the controller's physiological condition relative to the mishap incident.

4.6.3.2. After receiving medical clearance from the local flight surgeon, assess the controller's proficiency and take appropriate certification action or return the controller to ATC duties. (T-3)

4.6.4. The NCOIC, Airfield Management Operations (NAMO) will develop a mishap notification checklist to provide mishap response guidance to AM Operations supervisors on duty. As a minimum, locally developed aircraft mishap (on/off base) checklists must contain the following procedures. (T-2)

4.6.4.1. If mishap occurred on or near the airfield, record the following items in the events log effective at the time of the mishap:

4.6.4.1.1. Runway involved.

4.6.4.1.2. Runway Surface Condition.

4.6.4.1.3. ATCALS status.

4.6.4.1.4. Airfield lighting status.

4.6.4.1.5. Bird Watch condition.

4.6.4.2. Plot mishap location, cordon, entry control point, safe route, known hazards and other relevant information on crash grid maps.

4.6.4.3. Suspend/close operations to runways or taxiways as required.

4.6.4.4. Conduct FOD check as required. Do not touch or remove anything, e.g., FOD, debris, etc., from the runway. Inspect aircraft taxi routes affected by the mishap.

4.6.4.5. Print current NOTAMS and send Flight Safety and/or Local NOTAM, as needed.

4.6.4.6. Obtain mishap aircraft information as needed:

4.6.4.6.1. Aircraft call sign and tail number.

4.6.4.6.2. Departure base.

4.6.4.6.3. Home station or organization.

4.6.4.6.4. Name and rank of crew members.

4.6.4.6.5. Number of personnel on board.

4.6.4.7. Safeguard and make copies of the following documents:

4.6.4.7.1. Flight Plan (Weight and Balance if applicable).

4.6.4.7.2. AF Form 3616, *Daily Record of Facility Operations*.

4.6.4.7.3. Passenger manifest (if applicable).

4.6.4.7.4. Local airfield advisory information.

4.6.4.7.5. Any other forms that pertain to the flight.

4.6.4.7.6. Airfield Inspection Checklist as applicable.

4.6.5. When a facility, service, or ATCALS is, or is suspected of being involved in an aircraft mishap, ATCALS maintenance must be notified to record/document equipment performance and alignments. **Note:** Adjustments must not be made to ATCALS equipment during this inspection. (T-1)

4.6.5.1. Radar equipment performance checks must include scope, cursor, and map alignment. **Note:** Not applicable to DTAS sites. (T-1)

4.6.5.2. ATCALS maintenance must perform an immediate and comprehensive ground check of equipment that remains in operation. Since ATCALS maintenance can only validate signals at ground level, a local flyability check should also be conducted to ensure appropriate airborne signal reception. (T-1)

4.6.5.3. If equipment performance remains suspect, the AOF/CC shall ensure that the facility is taken out of service and request an official post-accident flight inspection. Return the facility to service, when it is suspected of contributing to a mishap incident, only after a successful FAA flight inspection. (T-1)

4.6.6. Establish procedures to ensure AOF personnel do not release the names of individuals allegedly involved in an aircraft incident or accident to agencies outside USAF channels. Procedures should ensure personnel do not discuss the accident/incident beyond what is necessary to accomplish duties via the crash phone. All inquiries from non-mishap response personnel must be directed to Public Affairs. (T-0)

4.6.7. The AOF/CC shall notify their MAJCOM AO staff of any mishap involving AOF services as soon as feasible without impacting emergency response activities. MAJCOM AO staffs will coordinate with MAJCOM safety counterparts to ensure appropriate AM and ATC representation is afforded to the mishap Safety Investigation Board (SIB), as required in AFMAN 91-223, *Aviation Safety Investigations and Reports*. When the command responsible for the mishap investigation differs from the command providing host base oversight, ATC/AM representation should be provided by the command with host base oversight. (T-2)

4.6.7. **(AFGSC)** Provide notification to HQ AFGSC/A33S Workflow within 24 hours regarding Runway Intrusions, Controlled Movement Area Violations, and HATRs. Notifications should be made by using the template located on the HQ AFGSC/A33S Airfield Operations SharePoint **(T-2).**

4.7. Accident Investigations Support.

4.7.1. At the request of the convening authority, HQ AFFSA or MAJCOM AO staffs will support safety or accident investigations with airfield operations functional experts.

4.7.2. All HQ AFFSA or MAJCOM AO staff personnel participating in aircraft accident investigations must complete the Aircraft Mishap Investigation Course (AMIC). (T-3)

4.8. Night Vision Device (NVD) Operations.

4.8.1. NVDs must not be used for providing separation services. NVDs are intended to enhance situational awareness only. Procedures for NVD use by AO personnel or blacked-out airfield operations must be published in the AOI and/or other appropriate LOP. For guidance on ATC and AM NVD equipment use, refer to Chapter 11 and Chapter 19 respectively. As a minimum, the following areas must be addressed: (T-1)

4.8.1.1. Scheduling procedures.

4.8.1.2. Notification/coordination requirements, (e.g. publication of NOTAMs, inclusion of remarks in FLIPS, etc.).

4.8.1.3. Weather/lunar illumination requirements.

4.8.1.4. NVD aircraft taxi routes and NVD traffic pattern, to include pattern entry/re-entry points.

4.8.1.5. Vehicle operations, participating vehicles will not be commingled with nonparticipating vehicles.

4.8.1.6. Traffic pattern/flow restrictions.

4.8.1.6.1. Nonparticipating aircraft will not mix with participating NVD aircraft in any traffic pattern or on any controlled movement area. Aircraft not performing NVD operations may mix with NVD aircraft only if signatory to an LOP outlining procedures with the unit performing NVD operations. The term "participating aircraft" is defined in FAAO 7610.4, Chapter 1.

4.8.1.7. Procedures to ensure applicable aircraft/vehicle separation requirement.

4.8.1.8. Termination/Restart procedures for:

4.8.1.8.1. Transitions between reduced and normal airfield lighting configurations to accommodate nonparticipating arrivals/departures.

4.8.1.8.2. Emergency knock-it-off/termination procedures.

4.8.1.9. Airfield lighting configurations (may vary to reflect mission/force protection requirements).

4.8.1.10. Internal tower cab lighting requirements.

4.8.1.11. Aircraft lighting requirements.

4.8.1.12. Vehicle lighting requirements.

Chapter 5

RECORDS MANAGEMENT, INQUIRIES, AND DATA

5.1. Recorded Records. The AOF/CC is the custodian of all recorded records in all USAF AO facilities. (T-3)

5.1.1. Retain all voice recorder tapes/cassettes and data extraction disc recordings for 45 days, or IAW guidance in Air Force Records Information Management System (AFRIMS), AF Records Disposition Schedule, Table 13-06, Rule 02.00, whichever is greater. (T-0)

5.1.2. At facilities where the ATC automation system has the ability to record operations on the system, retain all electronically recorded media (e.g., Continuous Data Recording (CDR), Digital Audio Tapes (DAT), Digital Audio Legal Recorder (DALR), etc.) for 45 days, or IAW guidance in AFRIMS, AF Records Disposition Schedule, Table 13-06, Rule 02.00, whichever is greater. (T-0)

5.1.3. Radar Audio Playback Terminal Operations Recording (RAPTOR) or other CDR data playback/data analysis tools may be used in the investigation of an incident, suspected separation loss, pilot deviation, controller error, TCAS event, miscellaneous incident, or accident. **Note:** RAPTOR is a stand-alone software program that "decodes" data recorded on STARS CDR tapes and then makes that data available for playback on a standard desktop computer.

5.1.3.1. CDR data reductions, including RAPTOR, are time consuming activities; therefore their retrieval should be limited to those times deemed absolutely necessary, as determined by the AOF/CC.

5.1.3.2. Copies of CDR data analyses, RAPTOR playbacks/files, and RAPTOR software are releasable, but only at the discretion of the AOF/CC.

5.1.3.3. RAPTOR file/playback release procedures. For multiple sensor systems, identify the sensor in use or filter all but the primary sensor in use. In addition, identify and/or provide an electronic copy of the RAPTOR radar map most likely in use during the event.

5.2. Retaining Mishap Records. AOF/CCs file and maintain official copies of written and recorded records pertinent to an alleged flying deviation, Military Flying Deviation (MFD) or Hazardous Air Traffic Reports (HATRs) for six months. File and maintain copies of written and recorded records about aircraft mishaps or accidents for two years, or on deactivation of the unit (if sooner), according to USAF records disposition schedule (Table 91-5, rule 3) located at **https://www.my.af.mil/afrims/afrims/afrims/rims.cfm**. This file may contain the originals or certified copies. In addition, keep other data such as crew duty schedules, controller training records, AF Form 1042, *Medical Recommendations for Flying or Special Operational Duty*, medical waivers/profiles, etc., used in the investigation that the government might require to defend ATC in law suit actions. This file should contain only factual data that is generated in the ordinary course of business; it should not contain un-sworn controller statements, summaries of events, opinions and recommendations, or privileged safety information. (T-0)

5.2.1. CDR data of automated radar systems may be used in the investigation of reported incidents believed to be operational errors/deviations to determine the amount of separation

that existed or position of the aircraft. CDR data may not be used as the primary source for reporting an incident or commencing an investigation. When CDR data is used in this capacity, the automated system clock shall be verified as being accurate at the time of the incident. (T-0)

5.2.1.1. Protect CDR media, CDR hard-copy printouts and all other recorded records of aircraft mishaps, alleged deviations or HATR to the degree necessary to prevent unauthorized access. Locked receptacles (file cabinets, desks or safes) are adequate for storing this material. (T-0)

5.2.1.1. **(T-3)**

5.3. Releasing Aircraft Mishap/Incident Related Information. Persons conducting an official safety investigation of a USAF mishap have access to all factual and non-factual information pertinent to an aircraft mishap. These individuals may interview or request statements/testimony from personnel who were controlling air traffic at the time of the mishap or who observed the mishap incident. These interviews, statements and testimony are not protected from public release in all cases. See specific guidance below and in the governing AFIs for the type investigations that are associated with aircraft mishaps and what information is protected.

5.3.1. AFI 91-204, *Safety Investigations and Reports*, and AFMAN 91-223, *Aviation Safety Investigations and Reports*, govern the SIB process. The SIB is chartered solely for mishap prevention; to find causes of mishaps in order to take preventive actions.

5.3.1.1. The SIB produces a two-part report. Part I of the report contains non-privileged factual information that may be disclosed outside the USAF in accordance with the Freedom of Information Act. If requested and available, CDR data may be included in Part I, Tab M. Transcripts of recorded air-to-ground and aircraft-to-aircraft communications are included in Part I, Tab N. Part II contains the privileged information that will not be disclosed. Investigation, Analysis, Findings, and Recommendations; Statements and Testimony of Witnesses and Persons Involved; and Statements of Persons Cited in Finding (respectively) are included in Part II, Tabs T, U, and V.

5.3.1.2. Distribution of privileged reports is restricted to those with a need to know and must be protected for inter-base email transmission. Refer to AFI 91-204, **Chapter 3**, for guidance on protecting privileged information. (T-1)

5.3.1.3. Privileged information contained in Part II of the SIB report may not be used as evidence for punitive, disciplinary or adverse administrative actions, for determining the misconduct or line-of-duty status of any person, in flying evaluation board hearings or reviews, to determine liability or liability in claims for or against the United States, or in any other manner in any action by or against the United States. The intent of this protection is to encourage open communication without fear of retribution, in order to expedite the discovery of causal factors and prevent future incidents.

5.3.2. AFI 51-503, *Aerospace Accident Investigations,* governs the Accident Investigation Board process. An AIB conducts a legal investigation to inquire into the facts surrounding Air Force aircraft and aerospace accidents, to prepare a publicly-releasable report, to gather and preserve evidence for use in litigation, claims, disciplinary actions, administrative proceedings, and for other purposes not specific to mishap prevention. AIB investigators have access to all the non-privileged testimony and evidence (factual data) pertaining to the

accident, including the evidence contained in Part I of the formal SIB report. The AIB investigators are provided with a list of the witnesses interviewed by the SIB. The AIB may interview controllers (including SIB witnesses) and obtain controller statements or testimony. SIB witnesses will only be interviewed by the AIB after they have been released by the SIB President. AIB investigators will not have access to privileged testimony or statements provided to the SIB and contained in Part II of the formal SIB report. Statements and testimony made during AIB investigations may be releasable to the public. Controllers may seek legal counsel before making statements or providing testimony to the AIB.

5.3.3. Factual records about HATR, near midair collision reports, systems errors, or deviations are releasable to any government agency conducting the investigation without reference to the FOIA. Units should cooperate to the maximum extent possible to make factual information available to the investigating agency. The investigator may also request AOF personnel to provide statements as supplemental information to aid in the investigation. These statements should contain factual information only.

5.3.4. FAA, National Transportation Safety Board (NTSB), and USAF investigators have access to factual records pertinent to an alleged violation of flying regulations. In accordance with AFI 91- 206 (I), *Participation in a Military or Civil Aircraft Accident Safety Investigation*, military commanders will furnish all reasonable assistance within their capability to other Government activities participating in an aircraft accident investigation. Requests for specific information should be routed through military commanders. These investigators may request controller statements or testimony. Controller statements and testimony made during this type of investigation are releasable to the public. Controllers may seek legal counsel before making statements or testimony to accident investigators. Do not release names of individuals involved without the specific approval of HAF/A3. (T-0)

5.3.5. The Department of the Air Force discloses its records to the public, unless these records are exempt from public disclosure. DoD Regulation 5400.7/Air Force Supplement, *DoD Freedom of Information Act Program*, outlines procedures for disclosure of records and lists specific exemptions for withholding records. Process any non-governmental request that cites the FOIA through the Wing or base FOIA office. (T-0)

5.3.6. All requests for release of safety information from foreign governments or their representatives, including host nation mishap investigation teams, should be referred to the AFSC/JAR for staffing.

5.4. Removing Original Records. With the exception of official safety investigations, do not release recorded or written records concerning mishaps without authority from the OG/CC (or designated representative/equivalent). Requests for safety investigations must be made to Wing Safety. Due to the potential for recording over or deleting original recordings, original recorded records shall be retained in the AOF files and a certified transcript or certified tape copy be released to appropriate authorities. Release transcripts/voice recordings FOR OFFICIAL USE ONLY to a recognized investigation authority. To ensure custodial control, written and recorded records should not be released to an intermediary collection agency that is not a member of the investigation board. If the original recording is released, keep a copy of the original recording with the custodian. Note: IAW FAA guidance, a DAT recording derived from the hard drive of the DVRS is certified as an original recording. (T-2)

5.4.1. At joint-use RAPCONs, where the USAF has furnished recorder equipment, the FAA maintains custodial control of recordings. If the USAF requires access to a tape of one of its positions in the facility, the FAA plays back the recording. If the mishap involves an FAA controller, the FAA provides a copy of the original voice recording for the use of investigators.

5.4.2. If there is a need for a transcript or an additional tape copy, make it from the original recording. Only two certified re-recordings of the original (DAT) recording should be made. Any additional re-recordings should be made from a certified copy of the original. When making a tape copy include all transmissions from initial call-up to at least 5 minutes after last contact. Use a speaker-to-microphone method to copy when the equipment will not electronically connect. Preface the reproduction with "I certify this to be a true and exact (copy or transcript) of the original recording on file at this office at (base name)" (Name and Grade); (Title). Also include the date and time of reproduction, the name of the person supervising the reproduction and a certification that the reproduction is a true copy of the original recording. (T-3)

5.4.3. The data extraction recordings of automated radar systems to a computer extraction disc are normally useless to a requesting party unless reduced to a printed hard-copy form. Therefore, when filling a request for computer data, the disc will be reduced to printed form unless the requesting party specifically requests the recorded data extraction. After a successful reduction to printed form, the disc may be returned to service through the normal rotation cycle unless a specific request is received to retain the disc in its entirety. The following disclaimer will be attached to any computer reproduction: "THIS DOCUMENT IS DERIVED FROM COMPUTER MAGNETIC RECORDINGS OF INTERNAL COMPUTER PROCESSING. IT IS NOT AN EXACT REPRESENTATION OF THE CONTROL POSITION DISPLAY." The printout data is considered an official record and shall be retained as part of the records identified in paragraph

5.5. How To Prepare Transcripts.

5.5.1. Include the following in the heading of the written transcript.

5.5.1.1. Subject.

5.5.1.2. Identity of the recording facility.

5.5.1.3. List of facilities and controller positions, and the abbreviation for each.

5.5.1.4. Frequency, landline, or position being recorded.

5.5.1.5. Date and time covered by the transcript.

5.5.1.6. Source of time entries; for example, time announcer, radio broadcast, reconstruction from timing tape, etc.

5.5.1.7. Certification statement IAW paragraph **5.4.2**

5.5.2. Abbreviate each facility in the transcript by using the location designator, followed by the facility and control position. Identify aircraft by an abbreviated call sign if confusion will not result. Precede each transmission with the time the transmission began and identity of the transmitting source. When the source is unknown, use UNK. Single-space the body of the transcription. Double-space between each transmission. Show unintelligible transmissions by

a series of asterisks. At the end of the transcript, center the statement, “END OF TRANSCRIPT”.

5.5.3. Certify copies of written records or tape transcripts as follows: "I certify this to be a true and exact (copy or transcript) of the original recording on file at this office at (base name)” (Name and Grade); (Title).

5.6. ATC Forms. Unless otherwise indicated, maintain all forms as official facility records according to AFI 33-364, *Records Disposition—Procedures and Responsibilities.* Publish proper documentation and management of forms in the appropriate LOP.

5.6.1. If not already on requirement for FAA forms or publications, order these through the base publications office or the nearest FAA facility. (T-0)

5.6.2. Flight Progress Strips. Any FAA approved form, as determined by the type of printing system, may be used. Destroy after 6 months. (T-0)

5.6.3. AF Form 3616. Use AF Form 3616 to document all abnormal conditions and occurrences during each shift in the AO facilities. Entries made by other than the WS or SC must include the controller’s operating initials. Facilities may initiate a new form at the beginning of each shift or use one form for a 24-hour period. CCTLRs must ensure standardization and adherence to local directives by reviewing and initialing all AF FORMs 3616. This form may be computer generated, typed or hand written. Destroy after 6 months. (T-1)

5.6.3.1. WS or SC accepts responsibility for the facility by making an initial entry with the exact time and their operating initials in the remarks section. Document temporary absences during the shift unless you can immediately recall the controller to duty. Anytime a WS or SC is relieved, enter the first name initial and last name and indicate transfer of responsibility for the shift on AF Form 3616 (e.g. "1310 T. SMITH OFF, TZ ON AS WS"). Entering the name of the relieved WS or SC serves the same purpose as signing the certification statement at the top of the actual form. The WS or SC responsible for the shift, when the form is printed, must sign under the certification statement at the top of the form. Individuals may correct or re-accomplish entries before making a hard copy but must not change the entries of a previous WS or SC without their consent. (T-3)

5.6.3.2. Use only authorized USAF, FAA, and International Civil Aviation Organization (ICAO) abbreviations and phrase contractions. In addition to USAF, FAA, and ICAO abbreviations, facility CCTLRs may develop local abbreviations provided they are identified in their facility OI.

5.6.3.3. CCTLRs may authorize use of this form to log position times instead of AF IMT 3626, *Position Log*. The CCTLR specifies which form to use and procedures for logging the position times. Use of either form will be consistent throughout the facility (use AF IMT 3616 all the time or AF IMT 3626 all the time).

5.6.4. AF Form 3626, *Position Log.* Use AF Form 3626 to record individuals responsible for each operating position. The controller being relieved must place the relieving controller’s operating initials on the form at the time they assume responsibility for the position. If assigning a trainee to a position, enter their initials on the form followed by the

relieving controller's operating initials. (T-0) CCTLRs may specify multiple positions to use a single position log, each position using one side of the form (positions that are side by side, simulator positions, etc.). The WS position does not require a position log. Destroy after six months. (T-1)

5.6.5. AF Form 3624, *Equipment Outage Log.* Use AF Form 3624 or AF Form 3616 to record equipment outages or malfunctions and maintenance notifications. Use one form until filled, or as directed by the CCTLR. Transfer open entries when starting a new log. Use of either form will be consistent throughout the facility (use AF Form 3624 all the time or AF Form 3616 all the time). Destroy after 6 months. (T-3)

5.6.6. AF Form 3615, *Required Data for Performing Precision Approach Radar (PAR)* Alignments (not applicable for GPN-22). CCTLRs must use AF Form 3615 for PAR alignment voltage computations. Get correct voltages from maintenance personnel. Maintain one copy on file and provide extracts for controller use during PAR alignments. Destroy when superseded. **Note:** This form is primarily used by (ATCALS) maintenance. (T-3)

5.6.7. AF IMT 3622, *Air Traffic Control/Weather Certification and Rating Record*. Use AF IMT 3622 to document limited weather certifications, ATC position certifications, WS/CIC certifications, trainer qualifications, and facility ratings.

5.6.8. AF IMT 3623, *Daily Traffic Count*, see details for use in paragraph 5.8.3.

5.7. Charts, Maps, Publications and Instruction Files.

5.7.1. Each ATC facility must maintain current FLIP documents pertinent to their area of responsibility. They must also display their area of control and depict the location (bearing and distance) and frequency of each Navigational Aid (NAVAID). Control towers and Radar Final Control (RFC) facilities are exempt from displaying their area of control. (T-2)

5.7.2. CCTLRs must provide a Recent Information File (RIF) and ensure review by all controllers. The RIF may be a folder, clipboard, binder or an automated display. (T-0)

5.7.3. CCTLRs must develop a suitable RRF or display tailored to each operating position. Define, identify and maintain local procedures or instructions supplementing regulatory guidance pertinent to an operating position. Automated versions may have a backup hard copy maintained at the WS desk. **Note:** The intent of the RRF files is not to reiterate LOPs, operating instructions, etc., but to streamline information for rapid reference in time sensitive situations. Information should not be simply cut and pasted from an LOP, but extracted in an easy to read, checklist type format. (T-0)

5.7.4. Control towers must maintain: (T-2)

5.7.4.1. Current on-base crash grid maps (off-base, when available). CCTLRs shall verify accuracy of grid maps with base CE, at least annually. (T-2)

5.7.4.1.1. Instruction on how to read a crash grid map is located in AFPAM 10-100, *Airman's Manual*, Section 6. (T-2)

5.7.4.2. Airport diagram (runways, ramps, barrier or arresting gear, blind spots, overrun information, precision approach critical areas, Precision Obstacle Free Zone (POFZ) markings, etc.). (T-2)

5.7.4.3. Visibility checkpoint chart(s) and/or visibility aids (day and night markers) developed in accordance with AFMAN 15-111, *Surface Weather Observations* with assistance from the local weather station. Weather personnel must validate visibility checkpoint charts annually. (Not applicable to Morón AB) (T-0)

5.7.4.4. Current sunrise and sunset tables. The tables can be downloaded from the United States Naval Observatory (USNO) website at **http://aa.usno.navy.mil/data**. (T-0)

5.7.4.5. Intersection takeoff diagram (at locations that authorize intersection takeoffs). Show the remaining runway length from each authorized departure intersection. Show all unauthorized departure intersections on the diagram. For example: //NO TAKEOFF//. Combine the intersection takeoff diagram with the airport diagram, when possible. Get measurements from an official source and record them on the diagram, reduced to the lower 50-foot increment. (T-0)

5.7.4.6. Diagram (video display, chart, etc.) of the airfield lighting system. Quick reference checklist/table identifying the operation of the airfield lighting system and proper light settings. (T- 0)

5.7.5. Radar facilities must maintain: (T-2)

5.7.5.1. A runway diagram for each airport served. As a minimum, include length and width, barrier or arresting gear, and overrun information. (T-2)

5.7.5.2. A Minimum Vectoring Altitude (MVA) chart developed in accordance with FAAO 8260.3. (T-0)

5.7.5.3. A minimum IFR altitude chart (not required for GCA/RFC facilities) for each NAVAID required for non-radar operations. Develop in accordance with AFI 11-230. (T-0)

5.7.5.4. Recommended altitudes for surveillance approaches developed IAW AFI 11-230. (T-0)

5.8. Military Air Traffic Activity Reports (ATARS). HQ AFFSA serves as the focal point for gathering, compiling, and disseminating ATARS. HQ AFFSA provides composite annual reports to the Air Staff, MAJCOMs, and other appropriate agencies upon request.

5.8. (AFGSC) Military Air Traffic Activity Reports (ATARS). In order to meet AFMAN 13-215, Volume 1, *Airfield Operations Data Systems* requirements units will email traffic count XML files to the AFGSC A33S Airfield Operations Workflow NLT the 5th duty day following each quarter (i.e. Jan-Mar traffic count shall be posted NLT the 5th duty day in April). Additionally, units will email the annual traffic count XML files to the AFGSC A33S Airfield Operations Workflow NLT 5 November **(T-2).**

5.8.1. DELETED

5.8.1.1. DELETED

5.8.1.2. DELETED

5.8.2. DELETED

5.8.3. DELETED

5.8.3.1. DELETED

5.8.3.1.1. DELETED

5.8.3.1.2. DELETED

5.8.3.1.3. DELETED

5.8.3.1.4. DELETED

5.8.3.1.5. DELETED

5.8.3.1.6. DELETED

5.8.3.1.7. DELETED

5.8.3.2. DELETED

5.8.3.2.1. DELETED

5.8.3.2.2. DELETED

5.8.3.2.3. DELETED

5.8.3.2.4. DELETED

5.8.3.2.5. DELETED

5.8.3.2.6. DELETED

5.8.3.3. DELETED

5.8.3.3.1. DELETED

5.8.3.3.2. DELETED

5.8.3.3.3. DELETED

5.8.3.3.4. DELETED

5.8.3.3.5. DELETED

5.8.3.3.6. DELETED

5.8.3.3.7. DELETED

5.8.3.4. DELETED

5.8.3.4.1. DELETED

5.8.3.4.2. DELETED

5.8.3.4.3. DELETED

5.8.3.4.4. DELETED

5.8.3.4.5. DELETED

5.8.3.4.6. DELETED

Chapter 6

CONVERTING AO SERVICES

6.1. Coordination Requirements.

6.1.1. HQ USAF/A3O is the approval authority for conversion of ATC and AM positions or services to DoD civilian or contract operations.

6.1.2. The AOF/CC shall: (T-2)

6.1.2.1. Inform MAJCOM of contract and SOW/PWS proposals, developments, and negotiations. Units must submit new contracts, proposed amendments/revisions to current contracts, quality surveillance plans and checklists to the parent MAJCOM for review prior to approving/implementing changes. (T-2)

6.1.2.2. Assign a quality assurance evaluator to ensure effective oversight. (T-2)

6.1.2.3. Participate in contract bid proposals and pre-award certifications. (T-2)

6.1.2.4. Develop plans for contractor termination by default or walk-outs. (T-2)

6.1.2.5. Ensure AO manpower positions are not converted to civilian/contract without MAJCOM/A3 approval. (T-2)

6.1.3. MAJCOMs shall:

6.1.3.1. Coordinate all proposals for competitive sourcing, contracts, or conversions of military authorizations to DoD civilians through HQ AFFSA, to include:

6.1.3.1.1. Proposed/revised contracts and SOW/PWS dates, location, host unit, and type of aircraft served (contractor name and address, and quality assurance evaluator name and phone number, if available).

6.1.3.1.2. Proposed timetable for transfer of manpower slots, personnel and equipment (transferred wartime tasking and personnel must be trained and ready for deployment) prior to conversion to DoD or contract services effective date. (T-3)

6.1.3.1.3. Training impact statements on how converting to civilians will provide an equivalent or higher level of support.

6.1.3.2. Review and coordinate on any new contract proposals or amendments.

6.1.3.3. Review and coordinate on contractor termination by default or walk-out.

6.1.3.4. Maintain copies of the contract for each contracted location.

6.1.4. HQ AFFSA will evaluate contract proposals for impact on manpower and wartime requirements and forward to HQ USAF/A3O-A for approval.

6.2. ATC Contracting Policy. At all state-side locations and Guam, HQ USAF and the FAA have agreed the USAF may contract only VFR control towers with low density traffic operations. USAF may not contract IFR facilities. The ANG is responsible for contracting tower services at ANG locations and will notify HQ AFFSA when contracting new facilities.

Chapter 7

ATC FACILITY MANAGEMENT AND OPERATING PROCEDURES

7.1. ATC Staff Positions.

7.1.1. Facility and Complex CCTLRs, or civilian equivalent. CCTLRs are responsible for managing the overall ATC radar or tower facility operations, as well as directly supervising assigned personnel. Each ATC facility must have a CCTLR, except RFC. Where manning dictates, the AOF/CC may authorize a single Complex CCTLR to simultaneously manage both the tower and radar facility. If the Complex CCTLR concept is used, individual facility CCTLRs are not authorized. (T-0)

7.1.1.1. Must be certified in the appropriate positions for their facility within 12 months of assuming duties and maintain proficiency. **Note:** At facilities with more than one Approach Control position, CCTLRs must obtain ratings in the most complex Approach Control position. (T-1)

7.1.1.1.1. Tower CCTLR: Control Tower Operator (CTO).

7.1.1.1.2. RAPCON CCTLR: Approach Control and Arrival Control.

7.1.1.1.3. GCA CCTLR: Arrival Control and RFC.

7.1.1.1.4. Complex CCTLR: Tower/RAPCON - CTO, Approach Control and Arrival Control; Tower/GCA - CTO and Arrival Control; Tower/RFC - CTO and RFC.

7.1.1.2. Must complete the CCTLR Course and CCTLR Qualification Training Package (QTP) within six months of course graduation. **Note:** Individuals selected short-notice to fill/assume CCTLR duties due to deployments or other unusual situations that are unable to attend a scheduled CCTLR course prior to assumption of duties, must complete the CCTLR QTP within 6 months of assumption of duties and attend the CCTLR course as soon as feasible. MAJCOMS will make every effort to secure a course allocation for the next available class. (T-1)

7.1.1.3. CCTLRs who fail to obtain the minimum ATC facility certifications must be withdrawn from the AFSC. The initiating officer is the AOF/CC. (T-1)

7.1.1.4. CCTLR key responsibilities:

7.1.1.4.1. Determine the minimum number of qualified controllers required for duty based on published facility hours, services required by assigned flying units and scheduled flying activities. (T-3)

7.1.1.4.2. Ensure that upgrade training and Special Experience Identifier (SEI) information is validated and submitted to the Unit Training Manager (UTM) for inclusion in the individual's personnel record. (T-1)

7.1.1.4.3. Implement approved ATC procedural changes in support of the wing flying mission, FAA and host nation requirements. (T-0)

7.1.1.4.4. Ensure all assigned controllers meet appropriate physical qualification requirements. (T- 0)

7.1.1.4.5. Document all trainer and facility watch supervisor certifications on AF Form 3622. (T-1)

7.1.1.4.6. Ensure controller training is implemented in accordance with the Training OI (TOI) and initiate corrective actions as necessary. (T-1)

7.1.1.4.7. Develop a checklist to review for currency/accuracy of all items listed in paragraphs 5.7.4. and 5.7.5. and document results. Review products at a minimum annually, date and initial by the CCTLR or delegated to the appropriate personnel. (T-1)

7.1.1.4.8. Manage the unit ATC simulation resources to ensure facility personnel maximize the use of simulation to accomplish training. (T-1)

7.1.1.4.9. Define procedures for opening and closing facilities that operate less than 24 hours a day, 7 days a week. Include these procedures in an LOP coordinated with the ATC facility that has IFR jurisdiction. (T-0)

7.1.1.4.10. Must ensure appropriate publications necessary to provide ATC services are available in each facility. (T-0)

7.1.1.4.11. Coordinate with the Installation Security/Anti-Terrorism Manager to remain current of installation security tasking and posture as applicable to ensure security of controlled areas. (T-3)

7.1.1.4.12. CCTLRs must establish procedures for personnel returning from TDY, Duty Not Involving Controlling (DNIC), and leave to receive training missed during their absences. (T-1)

7.1.2. NCOIC, ATC Training (NATCT), or civilian equivalent. Develops and manages the ATC Training Program.

7.1.2.1. Must be certified in all positions, in all facilities prior to assuming duties and maintain proficiency. **Exception**: At Nellis, Eglin, Tyndall, Sheppard, Columbus, Vance, and Laughlin, the NATCT must be certified and maintain proficiency in the most complex Approach Control and Approach Assistant positions, Arrival Control, Local Control, and Ground Control. (T-1)

7.1.2.2. At short tour locations, the NATCT must be certified in the most complex facility before assuming duties and maintain proficiency. An Assistant NATCT (ANATCT) must be appointed in writing and be available to assist with training matters in the facility in which the NATCT is not rated. (T-1)

7.1.2.3. Must complete the NATCT portion of NATCT QTP within 6 months of initial assignment to NATCT duties or training start date, whichever is greater. (T-1)

7.1.2.4. Attendance at Instructional Systems Design (ISD) Course is recommended.

7.1.2.5. NATCT key responsibilities.

7.1.2.5.1. Develop and manage the ATC Training Program, Front Load Training (FLT) and Facility Continuation Training (FCT). At those locations where the flight support element is authorized only one 1C1X1, the duty title must be NCOIC, ATC

Training and Standardization (TSN). TSN responsibilities include those of NATCT and NCOIC, ATC Standardization and Evaluation (NSE). (T-1)

7.1.2.5.2. Coordinate training requirements with the ATC staff: AOF/CC, CCTLR, NSE, and NAAM. (T-2)

7.1.2.5.3. Monitor facility training capability. (T-2)

7.1.2.5.4. Prepare and coordinate supplemental training (e.g., Generator, AFFSA-directed, etc.) with the ATC staff. (T-2)

7.1.2.5.5. Coordinate monthly controller proficiency training requirements with the ATC staff. Provide controllers with a monthly proficiency training requirement letter. As a minimum, include required review, recurring and supplemental training for the month. (T-2)

7.1.2.5.6. Inspect training record documentation for accuracy, completeness and standardization. Provide the ATC staff with inspection results at least monthly. (T-2)

7.1.2.5.7. Manage Computer-Based Instructional/Training (CBI/T) programs. (T-2)

7.1.2.5.8. Participate in AOF TRB. Brief required agenda items according to Attachment 5. (T-2)

7.1.2.5.9. Develop facility master training record (AF Form 623, *Individual Training Record Folder*). (T-2)

7.1.2.5.10. Develop and maintain facility master training plans. (T-2)

7.1.2.5.11. Supplement AFFSA developed QTPs with additional training items as required. (T-2)

7.1.2.5.12. Coordinate appointment and ANATCT activities with the respective facility CCTLR. (T-2)

7.1.2.5.13. Review Field Evaluation Questionnaires (FEQ) for validity prior to submission. (**Note:** Not applicable to AFRC.) (T-3)

7.1.2.5.14. Coordinate and process annual formal school training requirements according to the Education and Training Course Announcement. (T-2)

7.1.2.5.15. Coordinate simulation administrator activities (e.g. development and maintenance of sector and scenario simulation products) with the respective CCTLRs or Air Traffic Control Simulation Equipment (ATCSE) Program Specialist. (T-2)

7.1.2.5.16. Ensure controllers are trained on the use of the simulation equipment. (T-2)

7.1.2.5.17. Ensure Training Status Codes (TSC) reflect accurate status of personnel assigned according to AFI 36-2201, Attachment 11. **Note:** Not applicable to AFRC. (T-2)

7.1.2.5.18. Administer ADLS ATC 7-level Craftsman End-of-Course exam. (T-2)

7.1.3. NCOIC, ATC Standardization and Evaluation (NSE), or civilian equivalent. Administers the ATC certification and rating program and serves as the primary ATC

Specialist (ATCS) examiner. The NSE may also serve as the CTO examiner when delegated these responsibilities by the FAA. (T-0)

7.1.3.1. Must be certified in all positions, in all facilities prior to assuming duties and maintain proficiency. (T-1)

7.1.3.2. At short tour locations, the NSE must be certified in all positions in the most complex facility before assuming duties and maintain proficiency. (T-1) An Assistant NSE (ANSE) or CTO examiner must be appointed in writing (T-3) and, when appropriate, must be available to conduct ratings in the facility in which the NSE is not rated. (T-1)

7.1.3.3. Must complete the NSE QTP within 6 months of initial assignment to NSE duties or training start date, whichever is earlier. (T-1)

7.1.3.4. NSE key responsibilities include: (T-2)

7.1.3.4.1. Perform position certification/facility ratings and controller/special/annual evaluations using standards published in the facility Position Certification Guides (PCG). (T-1)

7.1.3.4.2. Evaluate the training program annually to ensure it meets mission, CCTLR and NAAM requirements. Evaluate components of the training program using guidance contained in AFMAN 36-2234, **Chapter 7**, Section C and Chapter 8. Document evaluation results in a memo for record and/or TRB minutes. **Note:** At locations with a TSN, the AOF/CC must appoint the best qualified facility rated seven-level to evaluate the training program.

7.1.3.4.3. Coordinate appointment and ANSE activities with the respective facility CCTLR.

7.1.3.4.4. Develop and administer all controller testing and evaluation requirements. (T-1)

7.1.4. NCOIC, ATC Training and Standardization (TSN), or civilian equivalent. A TSN is responsible for the ATC training and standardization/evaluation programs at locations where only one 1C1X1 position is authorized in the flight support element. The TSN assumes the responsibilities of the NATCT and NSE as indicated in paragraphs **7.1.2** and **7.1.3**

7.1.4.1. Must be certified in all positions, in all facilities before assuming duties and maintain proficiency. (T-0)

7.1.4.2. At short tour locations, the TSN must be certified in all positions in the most complex facility before assuming duties and maintain proficiency. An Assistant TSN (ATSN) or CTO examiner when appropriate, must be available to conduct ratings in the facility the TSN is not rated. (T-1)

7.1.4.3. Must complete the NSE and NATCT QTPs within nine months of initial assignment to TSN duties. (T-1)

7.1.4.4. Attendance at the ISD Course is recommended.

7.1.5. NCOIC, Airfield Automation Manager (NAAM), or civilian equivalent. A NAAM is responsible for performing and establishing AO automation procedures and managing supported systems, and works directly for the AOF/CC.

7.1.5.1. Must be certified in Approach Control and associated Approach Assistant (equivalent positions for enroute/range facilities) or Arrival Control and Arrival Assistant in GCA facilities within 12 months of initial assignment to the NAAM position and maintain proficiency (Not applicable to In-Garrison Combat Communications Group (CCG) units). The AOF/CC may require additional certifications based on the facility complexity. (T-1)

7.1.5.2. Must complete the AOSS formal course. For award of SEI 376, personnel must complete this course and associated experience requirements outlined in the Air Force Enlisted Classification Directory (AFECD). **Note:** SEI requirements not applicable to AFRC. (T-1)

7.1.5.3. Upon completion of local AOSS qualification training, individuals should retain this duty for a minimum of three years. This will ensure effective management of formal school training allocations and continuity of the automation functions at the unit level.

7.1.5.4. Must complete NAAM QTP within 6 months of initial assignment to NAAM duties or training start date, whichever is earlier . (T-1)

7.1.5.5. NAAM key responsibilities include: (T-1)

7.1.5.5.1. Works directly for the AOF/CC to manage/establish procedures for the AO automation section(s).

7.1.5.5.1.1. Develops monthly NAAM/AOSS duty schedule to ensure an adequate number of automation personnel are scheduled to support mission requirements in an effort to maintain airfield automation systems. Notify the AOF/CC, CCTLR and WS if AOSS support is unavailable.

7.1.5.5.1.2. NAAM must define CDR procedures in an LOP, to include procedures on reviewing, storing and securing CDR media.

7.1.5.5.2. Direct automation activities for system analysis, design, programming operations, maintenance, security, systems management, technical support and resource management. Help users define requirements. Recommend automation methods to enhance resource use.

7.1.5.5.2.1. Maintain configuration control over Digital Terminal Automation Systems (DTAS) operational computer programs, ensuring compliance with FAA, USAF local directives and specifications for the NAS.

7.1.5.5.2.2. Evaluate and coordinate automated system updates and enhancements with the ATC staff and other supported remote tower facilities prior to implementation. After coordination, implement approved ATC automation programming and functional system changes in support of the wing flying mission and FAA requirements.

7.1.5.5.2.3. When system deficiencies are recognized, direct actions to ensure the adequacy of recovery and de-bugging procedures. Coordinate software problems

with the ATC staff, MAJCOM, HQ AFFSA/A3/8 and appropriate FAA/DoD support personnel. Document and submit the appropriate automated system enhancement/deficiency reports as required.

7.1.5.5.2.4. Direct and plan testing of ATC automation computer software.

7.1.5.5.2.5. Responsible for the automated ATC system administration, CDR, playback systems and the implementation and maintenance of Low Altitude Alert Systems (LAAS). Coordinate with TERPS to obtain current MAJCOM-approved MVA map data for inclusion in the DTAS database.

7.1.5.5.2.6. Assign STARS user group and associated access privileges in accordance with FAAO JO 6191.2, *STARS System Administration Security Handbook*, Appendix D and define procedures in an LOP.

7.1.5.5.3. Provide facility management guidance in development of all LOPs/MOUs that define roles, responsibilities, and restoration priorities for all NAS STARS/MEARTS equipment. (T-1)

7.1.5.5.4. Provide facility management guidance in development of local contingency and disaster restoration plan in accordance with local directives and FAAO JO 1900.47B. (T-0

7.1.5.5.5. Perform and document DTAS periodic security administration procedures IAW FAAO 6191.2. Retain documentation of daily, weekly, and bi-weekly security checks for 6 months. Retain documentation of monthly and quarterly security checks for one year. (T-0)

7.1.5.5.6. Ensure completion of all required training as prescribed by guidance listed on the HQ AFFSA Airfield Operations SharePoint website as applicable to assigned location and scope of responsibility. (T-3)

7.1.6. Airfield Operations System Specialist (AOSS), or civilian equivalent.

7.1.6.1. Must obtain required certifications or obtain facility rating within 12 months of initial assignment to the AOSS position and maintain proficiency (Not applicable to In-Garrison CCG units). Minimum certifications to obtain are Approach Control or Departure Control and associated assistant positions (equivalent positions for enroute/range facilities) or Arrival Control and Arrival Assist in GCA facilities. Additional certifications, determined by the AOF/CC, should be based on the complexity of the facility. (T-1)

7.1.6.2. Must complete the AOSS formal courses for the system supported at the site. Completion of this course and experience requirements are outlined in the AFECD for award of the SEI. **Note:** SEI requirements not applicable to AFRC. Prerequisites to attend the AOSS course are located on the Education and Training Course Announcement (ETCA) website: **https://etca.randolph.af.mil/default1.asp**. (T-1)

7.1.6.3. AOSSs cannot perform automation duties unmonitored and are not considered qualified until they have successfully completed all required formal training courses, local qualification training task items, and the STARS Administrator QTP. When task certified on non-critical tasks, AOSSs may work unmonitored on those tasks only. (T-1)

7.1.6.4. Individuals should retain this duty for a minimum of three years. This will ensure effective management of formal school training allocations and continuity of the automation functions at the unit level. **Note:** Consider assignment vulnerability and other retainability concerns prior to selecting an individual for this appointment.

7.1.6.5. Must complete the STARS Administrator QTP and local AOSS qualification training within 12 months of assignment to AOSS duties. (T- 1)

7.1.6.5.1. Unit Training Manager must complete AF Form 2096, *Classification/On-the-Job Training Action* for award of 376 SEI. (T-1)

7.1.6.6. AOSS key responsibilities include the following; **Note:** The AOF/CC may delegate this responsibility, in writing, to the NAAM. (T-3)

7.1.6.6.1. Monitor the operations of the facility's ATC automated systems during their shift.

7.1.6.6.2. Develop, modify, integrate and test computer software. Arrange test routines and prepare documentation.

7.1.6.6.3. Perform system updates. Provide NAAM feedback on the integration of automated ATC radar system's site adaptation, Minimum Safe Altitude Warning (MSAW) and digital map databases.

7.1.6.6.4. Recommend system enhancements and functional changes and identify system problems. Document and report enhancements and system problems as required.

7.1.6.6.5. Store, control, and safeguard automated systems operational computer software programs in accordance with an LOP. Maintains the CDR storage library and administers CDR media changes as required, e.g. RAPTOR.

7.1.6.6.6. Perform system playback, backup and restore functions in accordance with LOPs.

7.1.6.6.7. Provide technical assistance to the NATCT on training and brief users on the operational use of supported computer systems as required.

7.1.6.6.8. Ensure compliance with directives governing security of automated ATC computer systems.

7.1.6.6.9. May accomplish NAAM duties during extended absences. Must be appointed in writing by the AOF/CC.

7.1.7. Watch Supervisor (WS) / Senior Controller (SC), or civilian equivalent.

7.1.7.1. Must be rated in all positions, including coordinator positions, and maintain proficiency. (T-0)

7.1.7.2. Must complete the facility WS QTP prior to performing duties as a WS/CIC and be selected/appointed by the CCTLR and documented on the AF Form 3622 by the CCTLR. (T-2)

7.1.7.3. WS/SC key responsibilities: (T-2)

7.1.7.3.1. The WS or SC maintains situational awareness of the overall flow of air traffic operations at the facility assigned, and when applicable, on the CMA. The WS is responsible for all ATC facility operations and services during their shift.

7.1.7.3.2. If necessary, the WS or SC may limit or disapprove operations based on existing traffic congestion or complexity, staffing, weather or individual controller training and experience capabilities.

7.1.7.3.3. A SC is also simultaneously responsible for duties at an operating position.

7.1.8. Assistant "Facility Type" Chief Controller (ACCTLR), or civilian equivalent.

7.1.8.1. DELETED

7.1.8.2. The CCTLR must determine whether an ACCTLR is required. (T-3)

7.1.8.2.1. Must be certified in all positions in their facility within 12 months of assuming duties and maintain proficiency. (T-1)

7.1.8.3. Responsibilities must be established in writing by the CCTLR. (T-3)

7.1.9. Assistant NCOIC, ATC Training (ANATCT), or civilian equivalent.

7.1.9.1. Must complete the NATCT QTP within six months of initial assignment to ANATCT duties or training start date, whichever is earlier. (T-1)

7.1.9.2. Must be certified in all positions in the facility where ANATCT support is provided. (T-1)

7.1.9.3. Responsibilities must be established in writing by the NATCT. (T-3)

7.1.10. Assistant NCOIC, Standardization and Evaluation (ANSE), or civilian equivalent.

7.1.10.1. Must complete the NSE QTP within six months of initial assignment to ANSE duties or training start date, whichever is earlier. (T-1)

7.1.10.2. Must be certified in all positions in the facility where ANSE support is provided. (T-1)

7.1.10.3. Responsibilities must be established in writing by the NSE. (T-3)

7.1.11. Assistant NCOIC, ATC Training and Standardization (ATSN), or civilian equivalent:

7.1.11.1. Must complete the NSE and NATCT QTPs within 9 months of initial assignment to ATSN duties. (T-1)

7.1.11.2. Must be certified in all positions in the facility before assuming duties and maintain proficiency. (T-1)

7.1.11.3. Responsibilities must be established in writing by the TSN. (T-3)

7.1.12. Air Traffic Control Simulation Equipment (ATCSE) Program Specialist.

7.1.12.1. ATCSE program specialists must complete all required training as prescribed by guidance listed on the HQ AFFSA Airfield Operations SharePoint website. (T-1)

7.1.12.1.1. At DTAS locations, the NAAM maintains system administration for ATCSE.

7.1.12.2. Courses for ATCSE systems evolve as new delivery capabilities are created. MAJCOMs will receive training information on ATCSE from HQ AFFSA and distribute as required.

7.1.12.3. ATCSE Program Specialists must develop and maintain a simulation equipment continuity folder that is available to all users. Include the following minimum items: (T-3)

7.1.12.3.1. Create and maintain simulation training scenarios and compile a complete list. Include a description (objective) of each scenario.

7.1.12.3.2. Current copy of the ATCSE user's manual.

7.1.12.3.3. Worksheet or log to track hardware/software malfunctions.

7.1.12.3.4. All coordination documentation current/relevant to the ATCSE system (e.g., emails, memos).

7.1.12.3.5. Appointment letters and duty description for ATCSE Program Specialists.

7.1.13. Terminal Instrument Procedures (TERPS) Specialists / Managers.

7.1.13.1. Must complete the USAF TERPS formal course, E5AZG1C171 00FA, identified at **https://etca.randolph.af.mil/default1.asp**. Military personnel are eligible for award of the TERPS 357 SEI once they complete the formal course, TERPS QTP, and associated experience requirements outlined in the AFECD. Upon successful completion of training, the Unit Training Manager will submit AF Form 2096, *Classification/On-the-Job Training Act*

7.1.13.2. AF instrument procedure designers shall be formally trained in ICAO instrument procedure design standards prior to reviewing or designing instrument procedures IAW AFI 11-230, **Chapter 7**, United States Air Force International TERPS Criteria. **Note:** Successful completion of an AFFSA/A3A approved ICAO Procedures for Air Navigation Services-Aircraft Operations (PANS-OPS) course meets this requirement.

7.1.13.3. HQ AFFSA/A3A manages TERPS course curriculum items and these items will constitute the training requirements. Changes to the course shall be identified through audits and instrument procedure design criteria changes adopted by the AF. Modification of the course shall be IAW AFI 36-2201.

7.1.13.4. AFFSA/A3A coordinates training quotas for TERPS courses IAW MAJCOM requirements.

7.1.13.5. Specialized Training (ICAO, FAA courses, etc.). HQ AFFSA/XA will identify and approve existing courses or organize new courses to ensure specialized training is made available. Specialized training is encouraged for all AF personnel engaged in performing instrument procedures tasks by attending/completing one of the courses below.

7.1.13.5.1. AFFSA/A3A approved specialized training courses provided by the FAA.

7.1.13.5.2. AIRPORT PLANNING AND DESIGN

7.1.13.5.3. AIRPORT PLANNING CRITERIA (CORRESPONDENCE)

7.1.13.5.4. INTRODUCTION TO AIRPORT LIGHTING, MARKING, AND NAVAIDS

7.1.13.5.5. INTRODUCTION TO FLIGHT PROCEDURES (AVN)

7.1.13.5.6. INSTRUMENT ENROUTE AND APPROACH DEVELOPMENT (INTERNATIONAL)

7.1.13.5.7. AREA NAVIGATION (RNAV) APPROACH CONSTRUCTION (MANUAL)

7.1.13.5.8. AREA NAVIGATION (RNAV) CONSTRUCTION APPROACH (INTERNATIONAL)

7.1.13.5.9. DEPARTURE COURSE

7.1.13.5.10. REQUIRED NAVIGATION PERFORMANCE (RNP) INITIAL

7.1.13.5.11. OVERVIEW OF FLIGHT PROCEDURES DEVELOPMENT

7.1.13.5.12. REQUIRED NAVIGATION PERFORMANCE (RNP) FOR MANAGERS

7.1.13.5.13. CNS/ATM

7.1.13.5.14. ICAO PANS-OPS

7.1.13.5.15. PANS-OPS USING GNSS

7.1.13.5.16. BASIC OBSTRUCTION EVALUATION AND AIRPORT/AIRSPACE ANALYSIS

7.1.13.5.17. OE/AAA REFRESHER TRAINING

7.1.13.5.18. AIRSPACE AND PROCEDURES

7.1.13.5.19. OBSTRUCTION EVALUATION FOR AERONAUTICAL INFORMATION SPECIALIST

7.1.13.5.20. QUALITY ASSURANCE PROGRAM ADMINISTRATION

7.1.13.5.21. AIRSPACE MANAGEMENT (AIR FORCE)

7.1.13.5.22. **(CBI)** NOTAMS

7.1.13.5.23. **(CBI)** CREATING QUALITY CBT

7.1.13.5.24. **(CBI)** RNAV LESSONS LEARNED AND INTRO TO RNP

7.1.13.5.25. AIRCRAFT ACCIDENT INVESTIGATION (NTSB)

7.1.13.6. TERPS responsibilities are identified in AFI 11-230.

7.1.14. Trainer: (T-1)

7.1.14.1. Must complete Air Force Training Course (AFTC).

7.1.14.2. Complete the HQ AFFSA Trainer QTP.

7.1.14.3. Position certified and/or facility rated.

7.1.14.4. Must be recommended by the supervisor, appointed in writing by the unit commander. (AOF/CC or CCTLR may appoint trainers if this responsibility has been delegated by the unit commander.)

7.1.14.5. Qualifications and responsibilities are outlined in AFI 36-2201, Chapter 6.

7.2. ATC Facility OI Construction. Each ATC facility must have a facility OI. At a minimum ensure the following are addressed: (T-2)

7.2.1. Responsibilities and functions of each operating position.

7.2.1.1. Operating position that will have an operational aural alarm for weather alerts.

7.2.1.2. Position responsible for collecting and disseminating weather data during equipment outages.

7.2.1.3. Most complex operating position.

7.2.2. Proficiency program requirements and procedures.

7.2.3. Position consolidation procedures.

7.2.4. Pre-duty familiarization procedures.

7.2.5. Alternate communications.

7.2.5.1. Interim/alternate communications procedures to use if primary radios or landlines fail.

7.2.6. Alternate ATC capabilities, as applicable.

7.2.6.1. Transition procedures and any restrictions on flight operations and/or vehicle movement.

7.2.7. Equipment checklist procedures.

7.2.8. Form documentation instructions.

7.2.9. RIF review/documentation requirements.

7.2.10. Recording tape and/or CDR change/check/recorder operating procedures.

7.2.11. Facility evacuation procedures.

7.2.12. Restricted runway operation procedures.

7.3. Facility Staffing Requirements. Staff each ATC facility with the following minimums: (T-2)

7.3.1. Control tower, GCA or RFC: One qualified watch supervisor/senior controller and one qualified controller.

7.3.1.1. When an additional qualified controller is not assigned or critical mission requirements do not allow the facility manager to schedule an additional qualified controller, a control tower, GCA or RFC may operate with only one qualified watch supervisor/senior controller during mid-shifts or other periods of low traffic density, for example: "Early dayshift, Wing down days, etc."

7.3.2. RAPCON: One qualified watch supervisor/senior controller and two qualified controllers (Thule AB: one qualified Senior Controller).

7.3.2.1. RAPCONs without the PAR function only require one qualified watch supervisor/senior controller and one qualified controller.

7.3.2.2. All units must ensure additional controllers are on duty, as required, to cover periods of increased traffic activity.

7.3.3. The published MAJCOM supplement serves as the manpower authorization source document in accordance with the Capabilities-Based Manpower Standard. All active duty MAJCOMs must supplement this instruction with base specific listings indicating the weekday/weekend operational positions/operating hours for each facility according to the example in **Table 7.1**

Table 7.1. Published Operating Hours per Facility

Days	Facility	# Positions	# Hours
Weekdays	Tower	4	16
		2	8
	RAPCON	7	12
		5	6
		3	6
Weekends	Tower	3	8
		2	8
	RAPCON	5	12
		3	4

7.4. ATC Restrictions and Duty Limitations: In order to manage or operate a control position in a USAF ATC facility, individuals must comply with 14 CFR, Part 65, *Certification: Airman Other Than Flight Crew Members*. Applicable requirements have been incorporated into this instruction. Local procedures to ensure compliance with the following must be specified in an LOP. (T-0)

7.4.1. Medical Requirements:

7.4.1.1. Military controllers must meet physical qualifications according to AFI 48-123, *Medical Examination and Standards*. Civilian (GS-2152) controllers must obtain and maintain a valid Class II FAA physical examination and certificate. The physical examination for GS-2152s must be performed by a designated Aero Medical Examiner (AME). **Note 1**: Payment of the annual GS- 2152 Class II physical examination is a unit responsibility as a condition of employment. **Note 2**: As per the Air Force Medical Support Agency, an AME-certified military doctor can perform duties of AME. (T-0)

7.4.1.2. Personnel may perform ATC duties even though they are taking innocuous medication, such as aspirin derivatives, vitamin preparations, nose drops and skin ointments.

7.4.1.3. In general, personnel ordinarily assigned to an operating position, including those who directly supervise within the facility, must not use the types of drugs listed

below within a 24-hour period before assumption of duty unless a medical waiver is obtained: (T-0)

7.4.1.3.1. Sedatives.

7.4.1.3.2. Tranquilizers.

7.4.1.3.3. Any drug, such as but not limited to, anti-hypertensive agents or duodenal ulcer medications, which has an effect on the central autonomic nervous system.

7.4.1.3.4. Any other drug and/or medication likely to affect the alertness, judgment, vision, equilibrium or state of consciousness.

7.4.1.4. Controllers must not be assigned ATC duties for at least eight hours after donating blood (formal flight surgeon restriction not required). Controllers must coordinate with the CCTLR prior to giving blood to minimize mission impact. (T-2)

7.4.1.5. Controllers receiving unscheduled medical/dental treatment (e.g., emergency room) must be cleared by the appropriate medical authority before performing ATC duties. If emergency medical care/treatment is required, notify the CCTLR as soon as possible. Controllers must coordinate with the CCTLR prior to receiving medical/dental treatment or immunizations that could affect duty performance capability. (T-2)

7.4.1.5.1. Military controllers must be cleared by the flight surgeon. Civilian (GS-2152) controllers must be cleared by the appropriate Aero Medical Examiner. (T-2)

7.4.1.5.2. Controllers must coordinate elective medical procedures with the CCTLR to avoid unplanned loss of work due to DNIC status that may result from the procedure. **Note:** Controllers cannot perform ATC duties for at least 8 hours after receiving a local or regional anesthetic agent. (T-2)

7.4.1.6. Controllers must neither perform ATC duties nor directly supervise other controllers, while under the influence of alcohol, (Blood alcohol level of .04 or greater) or within 12 hours of consuming any amount of alcohol. If alcohol is used during off duty time, it should be conservative so an individual's mental alertness and ability to perform are not reduced by the after effects (hangover) of alcohol. Abstinence 12 hours before commencing ATC duties does not guarantee blood alcohol level below .04 at the start of duty when large amounts are consumed. (T- 2)

7.4.1.7. Remote or Isolated Duty. Controllers going to a base/location that does not have a USAF medical treatment facility with a Physical Examination Section, complete a Preventive Health Assessment (PHA) or periodic medical examination as required, if the exam is due during the tour/deployment. Controllers assigned to remote sites where required interval medical examinations are not available are authorized no more than a 6 month deferral period to allow mission completion. This deferred period is effective only while assigned to the remote site. Controllers must ensure currency once assigned to a base with medical facilities capable of performing examinations. (T-2)

7.4.2. Hours of Duty. To enhance flight safety, air traffic controllers' duty hours are restricted to ensure that they are not fatigued while performing ATC duty. CCTLRs must comply with the following guidance when scheduling air traffic controllers for duty. (T-1)

7.4.2.1. A normal shift should be 8 hours and must not exceed 10 hours. (T-1)

7.4.2.2. A scheduled off-duty period between shifts must occur. The duration of the off-duty period will be at least 12 hours for military and Unit Type Code (UTC) tasked DoD (civilian Title 5 position also assigned as a Reservist to a deployable UTC) controllers, and at least eight hours for Civilian DoD controllers. (T-1)

7.4.2.3. When unforeseen events prevent staffing a facility as scheduled (emergency leaves, controllers in DNIC status, or other short-notice unexpected loss of personnel), controllers may be recalled to ATC duty with only 8 hours between shifts.

7.4.2.4. Duty time begins with the first scheduled duty, either ATC or non-ATC. Once duty time begins, it is continuous. After 10 hours of continuous duty, controllers must not perform further ATC duty. A 12-hour uninterrupted break (8 hours when unforeseen events occur and/or for non- UTC tasked DoD civilian controllers) must occur before the controller's next scheduled duty time requiring performance of ATC duties. Controllers must have at least 24 hours of uninterrupted, off-duty time following 6 consecutive days of duty. (T-1)

7.4.2.5. MAJCOM and Numbered Air Force (NAF) commanders may direct 12-hour surge shifts only at locations outside the NAS, where required to support contingencies or exercises. When using surge shifts, controllers must have a 12-hour uninterrupted rest period between shifts. (T-1)

7.5. ATC Certification Requirements:

7.5.1. Only personnel, to include host nation and sister service (USN, USA or USMC), who have successfully completed a formal DoD or DoT basic ATC course may issue control instructions to aircraft or be assigned to an operating position. (T-0)

7.5.2. Only qualified controllers may work in a position without a trainer/monitor. (T-0)

7.5.3. Tower personnel must be certified by a designated weather examiner per the Cooperative Weather Watch (CWW) Program and document on AF Form 3622 prior to receiving their initial position certification within a tower facility. (T-1)

7.5.3.1. Control tower facility managers will ensure visibility observation training is completed and documented in the appropriate Career Field Education Training Plan (CFETP)/Specialty Training Standard (STS) prior to controllers obtaining a weather certification. (T-1)

7.5.4. Only position certified and trainer qualified controllers may train or monitor a trainee. (T-1)

7.5.5. Controllers will not train or monitor more than one trainee in position at a time. (T-2)

7.5.6. Apprentice controllers who have not been awarded an SEI must not control emergency aircraft unless being formally evaluated for position certification or facility rating. (T-2)

7.5.7. Controllers who have never previously held an RFC certification will not monitor an instrument approach or perform as a final controller when the ceiling is less than 1,000 feet or the visibility is less than 3 miles, unless being formally evaluated for position certification or facility rating. (T-2)

7.5.8. Non-position certified controllers, regardless of previous experience, must not control an emergency aircraft on radar final approach when the ceiling is less than 1,000 feet or visibility is less than 3 miles, even when being formally evaluated. (T-2)

7.6. Proficiency Program. CCTLRs must establish monthly position time requirements and track controller proficiency time, using the program developed and maintained by HQ AFFSA, from the first to the last day of each calendar month, and outline additional actions to be taken when a controller fails to meet monthly proficiency time requirements in a facility OI. (T-2)

7.6.1. Controllers must maintain proficiency in all positions in which they are certified. When positions are combined, proficiency time may count for each position provided the controller performs ATC duties associated with each position under normal workload conditions. A controller must perform air traffic control duties under normal workload conditions in each operating position they are certified in no later than the last day of each month. Facility CCTLR will define normal workload conditions in the facility OI. (T-0)

7.6.2. Only apprentice controllers, prior to receiving initial SEI, can receive proficiency time while being monitored for the positions in which they are certified.

7.6.3. Simulation scenarios may be used to maintain controller proficiency; however, simulation must not exceed 50% of the time requirement. (T-2)

7.7. Consolidating Positions. Assign personnel to positions as required by activity, equipment and facility function. Consolidate positions only after considering activity and qualifications of the personnel involved (see paragraph 7.3. for facility staffing requirements). Do not combine Local Control with any other operating position, except during periods of authorized single-controller operations. (T-0)

7.8. Operating Initials. CCTLRs must assign two-letter operating initials to controllers in order to identify them for record purposes. (T-0) Unless signatures are specifically requested, controllers use assigned operating initials for all operating forms, interphone contacts, marking of recordable data media, and other records. CCTLRs must maintain a listing of controller initials. Duty rosters with name and initials can meet this requirement. (T-3) ATC personnel shall use 3-letter payroll initials (e.g., JAD) to sign off tasks on the AF Form 1098, CFETP, or AF Form 797, *Job Qualification Standard Continuation/Command JQS*. (T-1)

7.9. Pre-Duty Familiarization. CCTLRs must establish pre-duty familiarization procedures that provide for smooth transition from one crew to the next. Procedures should allow for continuity of ATC services without interruption. CCTLRs may increase the number of items and/or the level of detail of the pre-duty briefing and the position relief checklist as deemed necessary. Address the following areas to facility operations, as applicable: (T-0)

7.9.1. Status Information Areas/Boards.

7.9.2. Equipment (e.g. NAVAIDs, radar, radios, weather dissemination systems, etc.).

7.9.3. Airport Conditions/Status.

7.9.4. Airport Activities (e.g. snow removal, vehicles on runway, etc.).

7.9.5. Altimeter/Trends.

7.9.6. Weather (current/forecasted).

7.9.7. Special Activities (e.g., restricted/warning areas in use, air shows, flight checks, etc.).

7.9.8. Special Instructions/Restrictions (e.g., due to adjacent position training, non-standard staffing/configuration, etc.).

7.9.9. Facility Staffing/Training Assignments (e.g., current/proposed daily training plan).

7.9.10. New procedures.

7.9.11. Use of position relief checklist.

7.9.12. NOTAMs.

7.9.13. Controllers must read/sign off on operational procedure changes prior to assignment to an operational position.

7.10. Wind Information.

7.10.1. Wind sensors must be selected for the approach end of runway unless an operational advantage will result from another setting. Advise pilots if reported wind is from other than the approach end of runway. This may be accomplished by including information on the ATIS broadcast and pilots advise they have current ATIS information. (T-2)

7.10.2. Issue wind direction and speed from wind displays. For example: WIND TWO-TWO-ZERO AT ONE-FIVE. When wind displays are unavailable, issue wind information contained in the latest weather sequence, prefaced with the term ”Wind Estimated.” **Note:** Base Weather is the authority for determining if winds should be estimated. (T-0)

7.10.2.1. Issue wind gusts when observed. For example: WIND TWO-TWO-ZERO AT ONE- FIVE, GUST TWO-SEVEN. Wind gust is defined as a 10-minute peak wind speed only when that peak exceeds the wind speed lull by 10 knots or more. (T-0)

7.10.2.2. Issue variable wind information when observed. For example: WIND THREE-ONE-ZERO AT ONE-FIVE, VARIABLE BETWEEN TWO-SEVEN-ZERO AND THREE-FOUR-ZERO. Variable wind is defined as a wind direction change of 60 degrees or more in the preceding 2 minutes, when the wind speed is greater than 6 knots. For reasons of operational advantage or pattern efficiency, the OG/CC may waive the requirement to issue variable winds to wing aircraft. If waived, document procedures in the AOI. (T-0)

7.10.2.3. Issue gust spread only if specifically requested by the pilot. For example: GUST SPREAD TWO-THREE. Gust spread is defined as the difference between wind speed lull and wind speed peak during the preceding 10 minutes. (T-0)

7.11. Use of Communications. Use ATC frequencies for the transmission of authorized ATC instructions and information.

7.11.1. Personnel must not transmit or permit the transmission of: (T-0)

7.11.1.1. Non-ATC instructions and information, except as in paragraph 7.11.2. and 7.11.3. below.

7.11.1.2. Obscene, indecent or profane language.

7.11.1.3. False or deceptive communications.

7.11.1.4. Willful or malicious interference with other communications.

7.11.1.5. Superfluous or unauthorized transmissions including remarks of a personal nature.

7.11.2. Occasionally, it is necessary to transmit a message not directly associated with ATC, but pertains to safety of aircraft operation or preserving life or property. In these emergency situations, controllers or non-ATC individuals may transmit such a message. A non-ATC person may transmit this kind of message if: (T-0)

7.11.2.1. They coordinate transmissions with ATC facilities prior to transmitting.

7.11.2.2. They do not issue ATC instructions.

7.11.2.3. Controllers can interrupt transmissions to continue ATC services.

7.11.3. ATC facilities relay essential non-ATC instructions to aircraft if no other source of communications is available and transmissions do not interfere with the controller's responsibility to prevent collision between aircraft.

7.11.3.1. Commanders must ensure maximum use of pilot-to-dispatch, operations center, or similar facilities to relay non-ATC information. (T-2)

7.11.3.2. Relaying Distinguished Visitor (DV) information is necessary for military protocol. An ATC facility with direct landline capability may relay DV information to a single agency (AM, Operations Center or Command Post). The ATC facility notifies the agency only once. This duty is secondary to providing ATC services. The use of electronic flight progress strips constitutes notification if procedures are contained in a LOP or AOI.

7.11.3.3. When an unauthorized agency uses an ATC frequency, make an entry on the AF Form 3616. The AOF/CC must advise the proper base official for appropriate action. (T-2)

7.11.4. Unless safety of flight or necessity for the control of air traffic dictates otherwise, controllers should avoid transmitting to aircraft in the following critical phases of flight: short final, touchdown, landing roll, departure roll, and initial climb-out.

7.12. Landline Operations. ATC facilities must have direct and reliable landline communications with adjacent terminal and enroute facilities and specified base agencies. Each telephone line and landline must terminate in a communications key system in the facility, if possible. A direct landline is a dedicated telephone circuit that terminates in two facilities only, with no access available by another facility. Two-digit ring lines between enroute and terminal facilities meet the above criteria. **Note:** The optimum configuration between ATC facilities is a direct ring line or a "shout" line. (T-2)

7.13. Radar and Tower Coordination.

7.13.1. To ensure proper sequencing of all arriving IFR and/or VFR radar traffic, define radar and tower coordination procedures in an LOP. (T-0)

7.13.1.1. Establishing Local Procedures and Requirements: (T-3)

7.13.1.1.1. The distances from touchdown or end of runway specified below for the amber and green lights are the minimum. Adjust distances outward, if necessary, to meet local operating conditions in an LOP.

7.13.1.1.2. Do not modify the meaning or use of the red light.

7.13.1.1.3. Define multiple approach procedures, where required.

7.13.1.2. Wake Turbulence Separation. When mixing aircraft operating in the VFR traffic pattern with IFR arrivals, tower controllers must ensure appropriate wake turbulence separation exists, or will exist, before turning an aircraft inside the IFR aircraft on final. (T-2)

7.13.2. At locations without an installed radar and tower coordination system, establish procedures that ensure tower controllers receive information in accordance with paragraph 7.13.3.1.1. (T-3)

7.13.3. If available, use an installed radar and tower coordination system to coordinate all arriving radar traffic as follows: (T-3)

7.13.3.1. Flashing White Light. An arriving aircraft has reached a specified point from the runway (normally 15 flying miles):

7.13.3.1.1. Radar controller activates the flashing white light and furnishes the tower controller with aircraft identification, type, position, type of approach, and type of landing. State range if other than specified in the LOP. Facility managers may reduce or modify the information specified to meet operational needs.

7.13.3.1.2. Tower controller steadies the white light acknowledging receipt of arrival information.

7.13.3.1.3. Unless local procedures require radar monitoring using PAR equipment, CCTLRs may develop procedures that allow the aircraft to contact the tower after the tower controller steadies the white light.

7.13.3.2. Flashing Amber Light. An aircraft is (minimum) 7 miles from touchdown or end of runway and the radar controller is requesting tower approval for the aircraft to continue:

7.13.3.2.1. Radar controller activates the flashing amber light. State range if other than specified in the LOP.

7.13.3.2.2. Tower controller steadies the amber light to acknowledge the position of the aircraft and to approve continuation of the approach to 3 miles.

7.13.3.3. Flashing Green Light. An aircraft is (minimum) 4 miles from touchdown or end of runway and the radar controller is requesting tower clearance for landing, touch-and-go, stop and go, low approach or for the option.

7.13.3.3.1. Radar controller activates the flashing green light, verbally stating type landing and operating position. State range if other than specified in the LOP.

7.13.3.3.2. Tower controller steadies the green light and issues a verbal landing, touch-and-go, stop and go, low approach or for the option clearance when the aircraft is (minimum) 4 miles, but not closer than 3 miles, from touchdown or end of runway. The clearance includes field and traffic information if appropriate, and altitude restrictions for a low approach, if required.

7.13.3.3.3. Radar controller relays the tower clearance verbatim (may simultaneously transmit the clearance to the aircraft and tower).

7.13.3.4. Red Light. A flashing red light cancels the clearance for aircraft on final approach. Unless otherwise stated, it applies only to the first aircraft on final approach.

7.13.3.4.1. Tower controller activates the flashing red light when denying or canceling a clearance and furnishes a reason.

7.13.3.4.2. Radar controller steadies the red light after issuing the clearance denial or cancellation to the aircraft (may accomplish by steadying the red light simultaneously with the transmission of go-around instructions).

7.13.3.4.3. The radar controller may activate the red light and must verbally advise the tower of a radar-initiated go-around for the first aircraft on final. Tower steadies the flashing red light indicating receipt of the radar-initiated go-around. (T-2)

7.13.4. Use of QUICK LOOK Functions. QUICK LOOK functions may be used to coordinate aircraft arrivals, at locations where data from a system common to the servicing radar approach control facility and the control tower are presented on a Certified Tower Radar Display (CTRD), only if operational benefits will be accrued. In addition to the data on the CTRD, required keyboard capabilities to effect needed coordination must also be installed.

7.13.4.1. QUICK LOOK coordination, without some means of ensuring tower actively acknowledges inbound aircraft, is not recommended at locations with high density traffic and/or diverse or unpredictable arrival patterns. Determination of whether or not quick look is operationally beneficial is best decided at the unit level. USAF VFR towers who receive approach control service from FAA facilities and use automation for transferring control of aircraft, must not enter into any agreement unless the agreement stipulates an alternate means of transferring control of aircraft (e.g. landline coordination) when the CTRD is not operational. Examples of actively acknowledging inbound aircraft include steadying the flash on an automated handoff or verbal acknowledgement via landline. (T-2)

7.13.4.2. The use of automated handoffs in this context constitutes a transfer of information only and must not be considered a radar handoff. When QUICK LOOK is used to coordinate arrivals, the LOP governing tower/radar coordination procedures must specify: (T-2)

7.13.4.2.1. Procedures for data transfer between the radar facility and tower.

7.13.4.2.2. Communications changeover points.

7.13.4.2.3. Hours or conditions under which facility policy prohibits use of these functions.

7.13.4.2.4. The authority of the local controller or tower watch supervisor to determine whether use of the QUICK LOOK function is satisfactory or some other means of arrival coordination is required.

7.13.4.3. Factors to be considered by the tower in determining whether to use or prohibit the use of the QUICK LOOK function includes, but is not limited to: (T-2)

7.13.4.3.1. Light on the face of the CTRD.

7.13.4.3.2. Traffic volume and diversity.

7.13.4.3.3. The number of controllers available in the tower.

7.13.4.3.4. Other duties requiring the controller's attention.

7.13.5. Rolling/boundary notification. Automation is an authorized/approved method to establish nonverbal rolling/boundary notification for each departing aircraft.

7.13.6. Initial Departure Separation (e.g. Automatic Releases). When the radar facility delegates automatic release authority, tower personnel must provide initial separation for arriving/departing aircraft provided these procedures are identified in an LOP. (T-2)

7.13.6.1. At a minimum, the LOP covering procedures for Initial Departure Separation (Automatic Releases) must include: (T-2)

7.13.6.1.1. Arrival/Departure minimum cut-off distances.

7.13.6.1.2. A statement mandating "Automatic releases are not authorized when the official weather for the airport is reported as less than a 1000-foot ceiling and/or less than 3 miles official visibility or when the tower visibility is reported as less than 3 miles."

7.13.6.1.3. Either facility may cancel automatic releases when deemed necessary.

7.14. Minimum Distance Without Final Clearance. Do not continue a radar or radar-monitored approach closer than 3 miles from touchdown using PAR equipment or 3 miles from end of runway using ASR equipment without verbal clearance from the tower controller. These requirements must be contained in an LOP between the tower and the servicing radar facility. (T-2)

7.15. Opposite Direction Traffic. Define opposite direction procedures in the AOI and when the FAA provides radar services define in an LOA. All coordination must include the phrase "OPPOSITE DIRECTION DEPARTURE OR ARRIVAL (as appropriate), RUNWAY (number)." (T-0)

7.15.1. Opposite direction procedures apply to all aircraft regardless whether or not the aircraft is operating VFR or IFR. Locations that require opposite direction traffic must define minimum opposite direction cutoff points, distances, or fixes for the following operations: (T-0)

7.15.1.1. Arrival versus arrival.

7.15.1.2. Arrival versus departure, low approach, etc.

7.15.2. Consider all airfield conditions and flight profiles (tactical procedures) that may affect opposite direction operations.

7.16. Practice Approaches/Departures. VFR aircraft practicing instrument approaches at the approach control's primary airport must be provided IFR separation. The primary airport is the airport from which approach control service is provided. (T-0)

7.16.1. Tactical Approach/Departure requirements must be established in an LOP between participating agencies and aircraft. Guidance must include traffic patterns and cut-off point definitions and procedures to ensure protection of non-participating aircraft. (T-2)

7.17. Clearance Delivery. The clearance delivery function must be performed by a controller not actively controlling airborne traffic. **Exception**: Clearance delivery may be operated by a controller actively controlling aircraft when facilities are staffed by a single 7-level or civilian equivalent in accordance with paragraph 7.3. A clearance delivery position in a RAPCON must have a discrete frequency dedicated to clearance delivery and must not be keyed simultaneously with other frequencies. (T-0)

7.18. Emergency Frequencies. ATC facilities, except GCA and RFC, must have transmit and receive capability on emergency frequencies 121.5 and 243.0 MHz. Continuously monitor the emergency frequencies during operational hours. When more than one USAF ATC facility shares the emergency radio equipment, the tower must have override capability. Tower should have override capability on emergency radio equipment shared with FAA ATC facilities. ATC facilities must have an override capability on emergency radio equipment shared by non-ATC agencies. **Note:** Check override capability at least once daily. (T-0)

7.18.1. ATC personnel will normally handle an unscheduled personnel, emergency or crash locator beacon signal, as an emergency, regardless of duration. The WG/CC may require a lesser level of notification and response and direct ATC not to activate the PCAS. The WG/CC must ensure notification and response procedures are established. If controllers do not activate the PCAS, the ATC facility notifies a single named, base agency and the ARTCC or appropriate host nation equivalent. Define procedures in the AOI. (T-2)

7.18.2. Operational testing of a personnel, emergency, or crash locator beacon may not require a response when it is conducted within the first five minutes of the hour and is no longer than three audio sweeps. (T-0)

7.19. Interruptions to ATCALS. The commander responsible for ATCALS must ensure ATCALS are available to support the flying mission. Maintenance personnel response times/actions must be established in an LOP. Preventive Maintenance (PM) on ATCALS ensures the equipment performs at an optimum level. The commander responsible for ATCALS maintenance, subject to OG/CC approval, specifies a recurring PM schedule. When developing a standardized, recurring PM schedule, consider safety, local and adjacent base military and civil flying support requirements, current and forecasted weather, equipment reliability, redundancy and maintenance requirements. Publish the PM schedule in an LOP. AM submits the base PM schedule for inclusion in the FLIPs. The AOF/CC establishes procedures for reporting and coordinating ATCALS interruptions and malfunctions in an LOP. ATCALS electromagnetic interference should be reported according to AFI 10-707, *Spectrum Interference Resolution Program*. (T-2) **Note:** Historical data shows that ATCALS performance can degrade over time in ways not detectable by normal preventive maintenance. Units should advise their MAJCOM of system or operational deficiencies beyond local resolution to receive assistance from their regional maintenance center (RMC). The centers provide remote maintenance functions, maintenance assistance, training, and engineering-level guidance. Additionally they conduct special and commissioning system evaluations to determine the optimum system configuration (based on equipment capabilities, site limitations, mission requirements and environmental conditions).

7.19.1. Before turning a facility over for PM during other than published maintenance periods: (T- 0)

7.19.1.1. Maintenance workers must request approval for the work far enough in advance to allow for coordination.

7.19.1.2. The AOF/CC or designated representative coordinates the downtime of a facility and notifies maintenance of approval/disapproval.

7.19.1.2.1. Before approving downtime, obtain approval from the OG/CC and notify the AFM for appropriate NOTAM/airfield advisory action. Schedule no more than one ATCALS facility for maintenance at a time. Exception: Multiple ILS facilities installed at opposite ends of the same runway.

7.19.1.2.2. When an ATCALS component is part of the NAS, coordinate with the appropriate ARTCC, TRACON, and Flight Service Station (FSS). The coordinating agency must ensure appropriate NOTAM action is taken.

7.19.1.2.3. At multiple base complexes, coordinate PM schedules so all bases do not remove similar ATCALS from service at the same time.

7.19.1.2.4. Request planned maintenance shutdown of ATCALS during periods of least activity, including nighttime, as much as possible.

7.19.2. Maintenance workers must coordinate with the affected ATC WS/SC before taking ATCALS off the air. Define procedures in an LOP. (T-0)

7.19.3. WS/SC must not allow maintenance personnel to perform work that disrupts or affects the signal of a NAVAID, unless the facility is removed from service and the identification feature is set to “Test” or is turned off. (T-0)

7.20. Monitoring NAVAID Equipment. An internal monitor is an integral part of each NAVAID that automatically transfers transmitters or shuts down the NAVAID when its performance falls below established tolerances. Each NAVAID used for instrument flight must be monitored. (T-1)

7.20.1. Designate one ATC facility to be responsible for monitoring NAVAID status and install a Remote Status Indicator (RSI) for each NAVAID. The RSI displays the operational status of each NAVAID. The ATC facility monitoring the RSI informs other facilities of NAVAID status changes. (T-1)

7.20.2. When an RSI is inoperative or the RSI monitoring facility is unmanned, continue to use NAVAIDs equipped with an internal monitor as long as pilot or maintenance reports show the NAVAID is operating normally. (T-1)

7.20.3. For category (CAT) II ILS facilities, when the RSI fails or the facility with the RSI is not staffed, even though the ILS is functioning properly, downgrade the ILS to CAT I status. Units affected by this requirement should specify this requirement in an appropriate LOP. (T-1)

7.20.4. Snow Effects on ILS Glide Slopes. Snow accumulation must be removed from specific areas around the glide slope long before causing the glide angle to go out of tolerance. Follow procedures outlined in the AOI and Snow and Ice Control Plan to ensure the snow does not impact the glide slope signal. Advise AM and/or ATCALS Maintenance,

as appropriate, when snow accumulation or drifting on the airfield may impact system reliability. Remove the system from service when advised by ATCALS Maintenance that accumulation has exceeded technical limits in accordance with maintenance Technical Orders, when the RSI remains in alarm after attempted resets, or when system anomalies are reported by pilots on final, in accordance with FAAO JO 7110.65, **Chapter 2**, Section 1. The OG/CC determines if a local fly-ability check and/or special flight inspection is required before returning the system to service or if pilots continue to report anomalies in the signal. (T-1)

7.20.5. At locations where NAVAIDs operate less than 24-hours daily, publish NAVAID operating hours in appropriate FLIPs. (T-1)

7.21. Auxiliary Power for ATCALS Facilities. The OG/CC must determine which ATCALS and ATC communications facilities require the installation and operation of auxiliary backup power generators and automatic start and transfer systems to ensure long term, seamless operation in the event of a commercial power failure. (T-2)

7.21.1. The following facilities should be considered: (T-2)

7.21.1.1. NAVAIDs.

7.21.1.2. Radar facilities, control towers.

7.21.1.3. Transmitter or Receiver sites and Ground Air Transmitter Receiver (GATR) sites.

7.21.2. At a minimum, ensure all facilities included in the NAS are in compliance with FAAO JO 6950.2, *Electrical Power Policy Implementation at National Airspace System Facilities*. (T-0)

7.21.3. Include auxiliary power requirements in the AOI.

7.21.4. When automatic start and transfer capability is not available or the OG/CC has determined commercial or base power is unreliable to support critical mission requirements and aircraft launch and recovery, units should consider placing ATCALS facilities on backup generator power for impending severe weather conditions.

7.21.5. Include auxiliary power procedures for all ATCALS facilities in an LOP. Consider all available auxiliary power sources (generators, Uninterruptible Power Supply (UPS) and battery capability), base civil engineering support (maintenance, testing, response times and restorable priorities for failed auxiliary power sources), and user responsibilities. (T-2)

7.21.5.1. Maintenance personnel must obtain approval from: (T-2)

7.21.5.1.1. The facility responsible for monitoring NAVAID status before transferring power at a NAVAID.

7.21.5.1.2. Affected ATC facilities before transferring power at transmitter/receiver sites.

7.21.5.1.3. Affected ATC facilities before transferring power at a control tower or radar facility.

7.22. Alternate ATC Capabilities. The OG/CC determines if there is a need for alternate ATC capabilities to sustain ATC services during emergency conditions. Where a need has been

established define transition procedures and any restrictions on flight operations or vehicle movement due to alternate ATC facility limitations in an LOP.

7.22.1. The following are requirements for fixed alternate ATC facility operations: (T-2)

7.22.1.1. UHF/VHF transmitters and receivers.

7.22.1.2. Landline communications.

7.22.1.3. Land Mobile Radio (LMR) with transmit/receive capability.

7.22.1.4. Control of airfield lighting.

7.22.1.5. Applicable publications.

7.22.1.6. NAVAID monitoring.

7.22.1.7. Recording equipment (if capability exists).

7.22.1.8. Access to pertinent airfield information (NOTAMs, weather, etc.).

7.22.2. During emergency/contingency situations, OG/CCs must determine what minimum equipment is necessary for ATC operations to ensure flight safety. (T-2)

7.23. Precision Approach Critical Areas. Protect the precision approach critical areas in accordance with the AOI. The localizer (Figure 7.1), the glide slope (Figure 7.2) and ILS CATII/PAR touchdown area (Figure 7.3), POFZ, Mobile Microwave Landing System (MMLS) azimuth critical area (Figure 7.4) and MMLS elevation critical area (Figure 7.5). Establish touchdown areas only when the height above threshold (HATh) is less than 200 feet for either an ILS/MMLS or PAR approach. (T-2)

7.23.1. CAT I and II ILS Localizer Critical Areas (**Figure 7.1**).

7.23.1.1. When the reported ceiling is less than 800 feet and/or the visibility is less than 2 miles, restrict all aircraft and vehicle operations in the localizer critical area. Do not permit vehicles or aircraft to transit the localizer critical area when an aircraft on the ILS approach is inside the Final Approach Fix (FAF). **Exception:** A preceding aircraft, approaching the same runway or another runway, may pass through the area while landing, departing, or exiting the runway; do not allow aircraft to stop within the critical area. (T-2)

7.23.1.2. When the reported ceiling is less than 200 feet and/or Runway Visual Range (RVR) 2,000 or less (1/2 mile visibility if no RVR) do not authorize vehicle or aircraft operations in or over the area when an arriving aircraft is inside 1 Nautical Mile (NM) final approach. (T-2)

7.23.2. CAT I and II ILS Glide Slope Critical Areas (**Figure 7.2** and **Figure 7.3**).

7.23.2.1. When the reported ceiling is less than 800 feet and/or visibility less than 2 miles, but at or above 200 feet and/or visibility at or above 1/2 mile (RVR 2,400), restrict all aircraft larger than fighter type size. Do not permit these aircraft to taxi beyond the instrument hold line when an aircraft executing an ILS/MMLS approach is inside the FAF. (T-2)

7.23.2.2. When the reported ceiling is less than 800 feet and/or visibility less than 2 miles, restrict all vehicles. **Note:** Vehicles (e.g., launch essential vehicle, mission support

vehicle and end of runway vehicle) escorting the fighter type size aircraft under the conditions of paragraph 7.23.2.1. are authorized to proceed into the glideslope/elevation critical area with the aircraft (aircraft tows are not authorized). Do not permit vehicles to proceed beyond the instrument hold line when an aircraft executing an ILS/MMLS approach is inside the FAF, unless the arriving aircraft has reported the runway in sight or is circling to land on another runway. (T-2)

7.23.2.3. When the reported ceiling is less than 200 feet and/or visibility less than 1/2 mile (RVR 2,400) restrict all aircraft and vehicles. Do not permit aircraft to taxi or vehicles to proceed beyond the instrument hold line when an aircraft executing an ILS/MMLS approach is inside the FAF. (T- 2)

7.23.3. PAR Touchdown Areas (Figure 7.3). When the reported ceiling is less than 200 feet and/or the RVR is 2,000 or less (1/2 mile visibility if no RVR), do not authorize vehicles or aircraft in the PAR touchdown area when an aircraft conducting an approach or missed approach is inside the Middle Marker (MM) or 1 NM from touchdown if no MM. (T-2)

7.23.4. MMLS Azimuth Critical Area (**Figure 7.4**).

7.23.4.1. When the reported ceiling is less than 800 feet and/or the visibility is less than 2 miles, restrict all aircraft and vehicle operations in the azimuth critical area. Do not permit vehicles or aircraft to transit the azimuth critical area when an aircraft on the MMLS approach is inside the FAF). **Exception:** A preceding aircraft, approaching the same runway or another runway, may pass through the area while landing, departing, or exiting the runway; do not allow aircraft to stop within the critical area. (T-2)

7.23.4.2. When the reported ceiling is less than 200 feet and/or RVR 2,000 or less (1/2 mile if no RVR) do not authorize vehicle or aircraft operations in or over the area when an arriving aircraft is inside 1 NM from touchdown. (T-2)

7.23.5. MMLS Elevation Critical Areas (**Figure 7.5**).

7.23.5.1. are authorized to proceed into the elevation critical area with the aircraft (aircraft tows are not authorized). Do not permit vehicles to proceed beyond the instrument hold line when an aircraft executing an MMLS approach is inside the FAF, unless the arriving aircraft has reported the runway in sight or is circling to land on another runway. (T-2)

7.23.5.2. When the reported ceiling is less than 800 feet and/or visibility less than 2 miles, restrict all vehicles. **Note:** Vehicles escorting (e.g., launch essential vehicle, mission support vehicle and end of runway (EOR) vehicle) the fighter type size aircraft under the conditions of paragraph

7.23.5.3. When the reported ceiling is less than 200 feet and/or visibility less than 1/2 mile (RVR 2,400) restrict all aircraft and vehicles. Do not permit aircraft to taxi or vehicles to proceed beyond the instrument hold line when an aircraft executing an MMLS approach is inside the FAF. (T-2)

7.23.6. Criteria for Protecting Critical Area. The DoD is authorized to define criteria for protection of precision approach critical areas at military controlled airports. The criteria apply to both military and civilian operating at that military controlled airport.

7.23.6.1. Protection of the critical area by enforcing restrictions of the CMA is essential to flight safety. Units should assess current operations to ensure protection of precision approach capability. Unit level assessment should consist of the following items: (T-2)

7.23.6.1.1. Evaluate the existing critical area's footprint against available options and select the criteria that best suits Wing operational needs, using the following guidelines:

7.23.6.1.1.1. USAF criteria or FAA criteria described in FAAO JO 6750.16, *Siting Criteria for Instrument Landing System*, may be applied at any USAF location. NATO criteria described in APATC-1 Version A may be applied at any NATO base. ICAO criteria described in ICAO Attachment C to Part I of Annex 10 may be applied at any overseas location. Do not apply more than one criteria to any instrument landing system, e.g. FAA localizer criteria and ICAO glideslope criteria.

7.23.6.1.1.2. Application of the footprint is system dependent, not airfield dependent. For example, units may use FAA criteria for one system (glideslope or localizer) and USAF criteria for another if that configuration best suits the needs of a particular location.

7.23.6.1.2. If the footprint of the selected criteria contains a stationary object (e.g. fence, building), ensure the unit has a current flight inspection report on file conducted since the object was in place. If interference is not detected, no further action is required. If interference is detected, the object must be removed or the signal will not be valid under specified weather conditions.

7.23.6.1.3. If the footprint of the selected criteria contains a non-stationary object(s), one or more of the following actions must be taken:

7.23.6.1.3.1. Establish procedural guidance to control/prohibit operations in the movement area when required to protect the signal for aircraft on final.

7.23.6.1.3.2. At locations where perimeter/access roads penetrate the critical area, install stop lights (or an equivalent device) to prevent intrusion of vehicles not in direct radio contact with the tower, when inbound aircraft on the approach require a protected signal.

7.23.6.1.3.3. Use alternate approach capability (e.g., PAR) when feasible and restrict use of the ILS/MMLS when weather conditions dictate protection of critical areas.

7.23.6.1.4. MAJCOM/A3s are granted waiver authority for protection of critical areas at USAF locations. This authority may be delegated to respective units, but only to Wing Commanders. Use the following guidelines:

7.23.6.1.4.1. Units must conduct an operational risk assessment of factors involved (e.g. weather criteria, mission necessity, alternative approaches available, reduced level of safety, standardization of air traffic control services) when allowing movement in the critical areas during periods when weather conditions dictate the area be controlled. Unit risk assessments must specifically address both military and civilian aircraft operations at the base. Risk

assessments must be included as part of any waiver request package submitted to the MAJCOM/A3 or designated representative.

7.23.6.1.4.2. Upon approval, procedures for implementing waivers must be briefed at the AOB and published in the AOI. Appropriate entries must be published in DoD FLIP products to ensure aircrews are aware of criteria that have been waived. (T-1)

Figure 7.1. Localizer Critical Area.

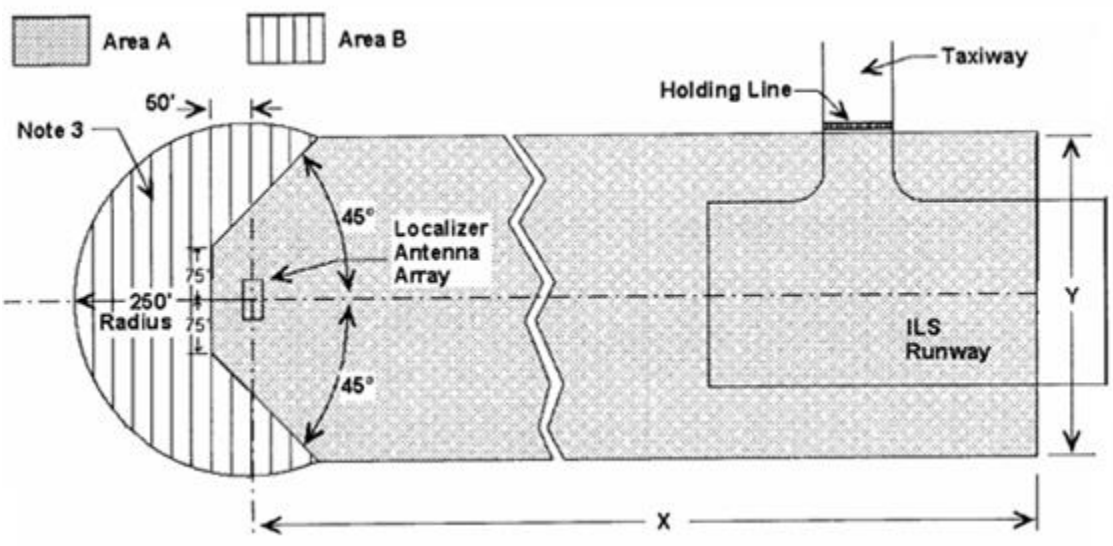

	X	Y	
Category I	2000	400	**Note 4**
Category II/III	2000	400	**Note 5**
Category II	4000	500	
Category III	7000	500	

Notes:

1. Critical area is indicated by shaded zones.
2. Hold line/signs indicate the position beyond which aircraft/vehicles will require Air Traffic Control Tower (ATCT) authorization before proceeding on or across a runway.
3. Area B is deleted from the critical area when a unidirectional localizer is installed. The standard log-periodic dipole antenna array is in this category. Note: Diagram remains current; however, bi-directional localizer is no longer applicable for USAF.
4. For 8-element localizer array with course widths less than 4 degrees and runways which operate B-747 size and larger aircraft, the Y dimension shall be 600 feet. (T-2)
5. These dimensions apply where aircraft size is equal to or less than 135 feet in length or 42 feet in height; e.g. B-727.
6. Critical areas for LDA, SDF and Offset Localizer facilities are the same as for Category I, but are centered about the course line.

Figure 7.2. Glide Slope Critical Area.

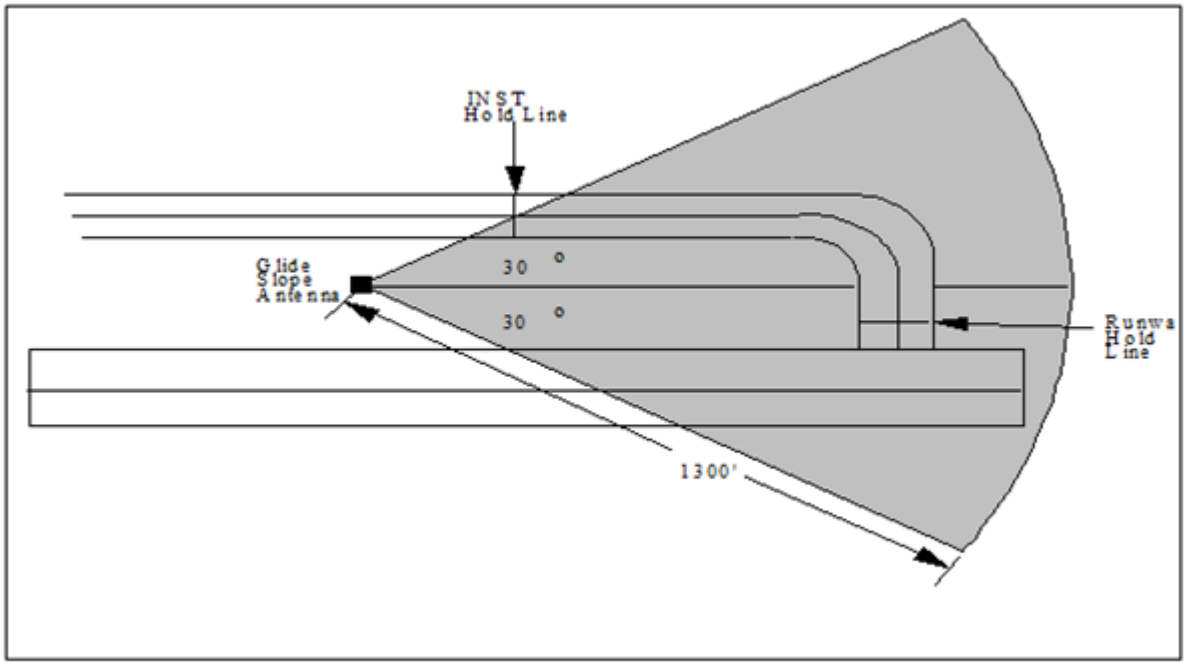

Note: This is a fan-shaped area that extends from the glideslope antenna 1,300 feet toward the approach end of the runway or to the end of the runway, whichever is greater. It covers an area 30 degrees each side of a line drawn through the glideslope antenna and parallel to the runway centerline.

Figure 7.3. Touchdown Area.

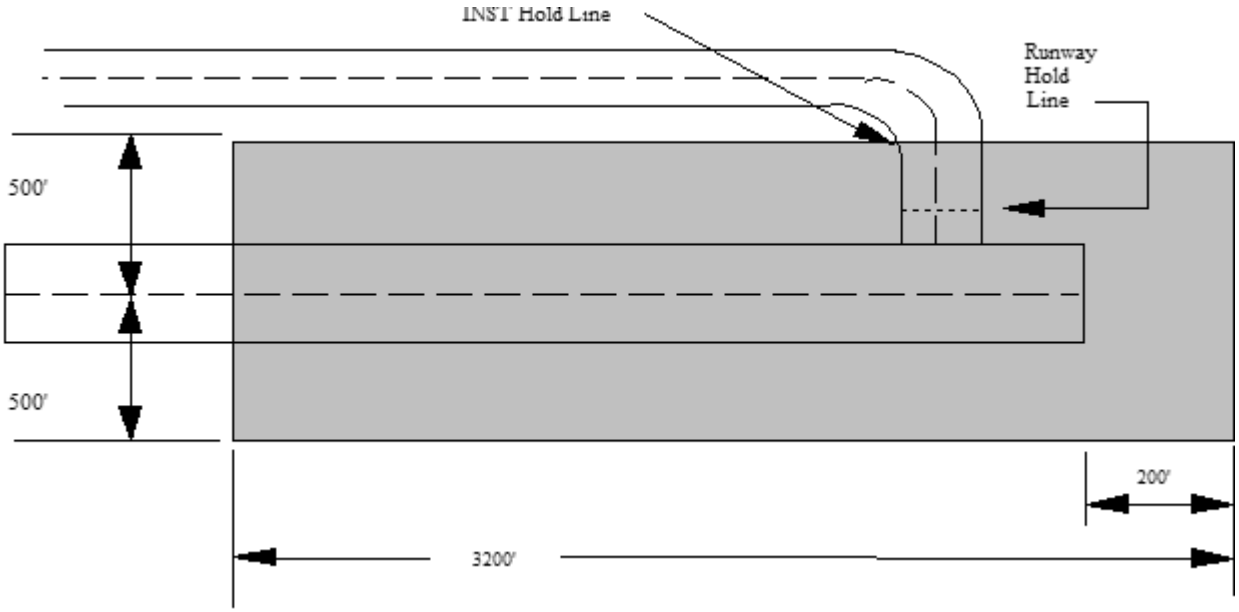

Figure 7.3 Note: This is a 3,200 foot long by 1,000 foot wide rectangle centered on the runway centerline. It begins 200 feet outward from the landing threshold (normal or displaced) and extends 3,200 feet in the direction of landing. The instrument hold line must not be placed closer than 500 feet from the runway centerline when the Touchdown Area applies. (T-2)

Figure 7.4. MMLS Azimuth Critical Areas.

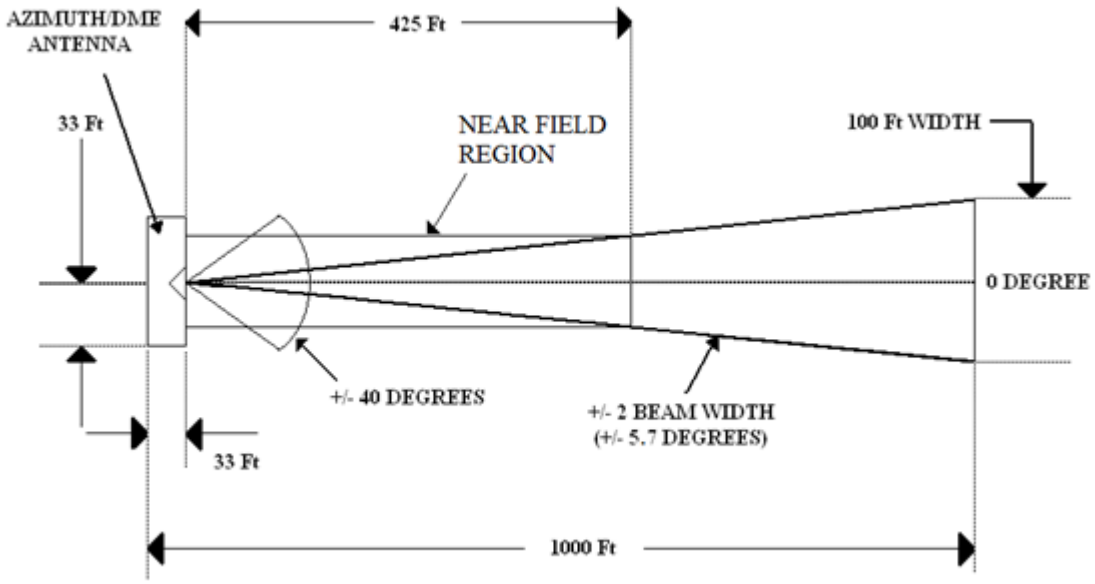

Figure 7.5. MMLS Elevation Critical Areas

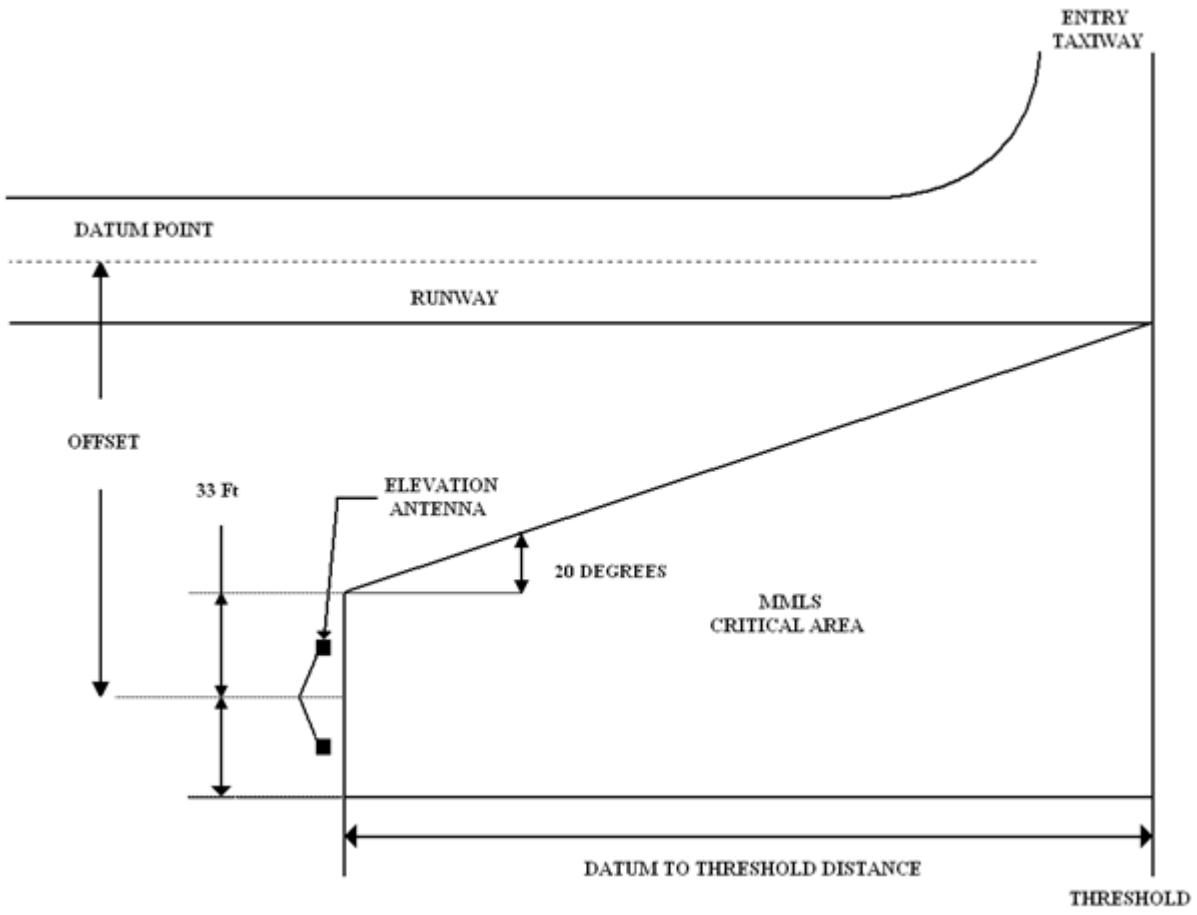

7.24. Displaced Landing Threshold. Actions required in response to displaced landing threshold operations are specified in AFI 11-230.

Chapter 8

ATC EQUIPMENT

8.1. Equipment Checks.

8.1.1. CCTLRs must ensure proper operations of all equipment, to include actions after a power failure and generator changeover. (T-0)

8.1.1.1. CCTLRs must, with technical assistance from the NAAM, publish procedures and develop a detailed checklist in an LOP to ensure proper operations of DTAS, automated equipment, and all locally defined systems, to include procedures for periodic checks, system monitoring, and actions after a power failure and generator changeover. (T-0)

8.1.1.2. The WS/SC opening the facility must complete all equipment checks, as applicable, prior to officially opening the facility. Additionally, each on-coming watch supervisor must initiate an equipment checklist at the beginning of each shift and complete the checklist as soon as possible. (T-3)

8.1.2. Watch supervisors must verify equipment outages daily with appropriate base agency, and document completion of the equipment outage check on AF Form 3616. Locations must establish localized procedures in an LOP to verify outages. (T-3)

8.1.2.1. ATCALS/equipment status must be classified as either in-service or out-of-service. ATCALS/equipment logged as out-of-service must not be used to provide ATC services. Terms, such as awaiting "hot check" or similar verbiage are not valid means of reporting/determining equipment operational status. When maintenance reports equipment as usable and indications are the equipment is usable, the equipment should be logged "in service" and, if necessary, an airborne check must be accomplished as soon as practical. ATC should not solely delay closing work orders due to aircraft non-availability to conduct equipment checks. (T-1)

8.1.3. **(Not Applicable to DTAS)** Radar and Video Map Alignment. CCTLRs provide detailed radar and video map and alignment procedures in the appropriate ready reference file and/or equipment checklist as follows:

8.1.3.1. Method for checking range/azimuth of obstruction/Permanent Echo (PE) symbols. The allowable tolerance for radar/map alignment is 2 percent of the ASR antenna-to-PE distance. The allowable tolerance for azimuth is +/- 1.0 degrees. The PE target and PE symbol must be checked separately, however, the tolerances are the same. The PE target is checked to verify radar alignment; the PE symbol check validates map alignment. Calculate the range tolerance using the following formula: ASR antenna-to-PE distance: .02 X distance (in feet) = allowable range tolerance, for example: To compute the allowable tolerance if the ASR-to-PE symbol/obstruction distance is 20 NM, multiply .02 X 20 = 0.4 NM. Thus, the PE symbol/obstruction (checked using the cursor and/or range strobe) must fall within +/- 0.4 NM of the actual PE symbol/obstruction location. (T-1)

8.1.3.2. To preclude variances in cursor read out among indicators, designate one radar indicator as the primary source for determining facility radar/map alignment. Controllers

are still required to perform radar/map alignment checks at their assigned scope, however, the radar and/or map generator will not be logged out until verified on the primary alignment scope. Fix tolerance and map alignment must be checked on the same range scale for which the video map was developed. See GPA-134, Digital Map Development QTP, for map development procedures. (T-1)

8.1.3.3. TPN-19 and MPN-14K1 mobile radar systems are not capable of deriving distance criteria, therefore, verify that the PE symbol/obstruction is within +/- 1.0 degrees (using the radar cursor) of the actual PE symbol/obstruction location.

8.1.3.4. Range scale for each video map.

8.1.4. For automated systems, verification of the accuracy of new or modified digital maps must be accomplished through the use of "targets of opportunity" flying over displayed fixes, navigational aids, etc. Any observed discrepancies must be documented to indicate the observed direction and displacement. If any identified error cannot be corrected or if a facility is otherwise dissatisfied with the results from "targets of opportunity," request a flight check if necessary. (T-0)

8.2. Facility Clocks. A reliable clock showing hours, minutes and seconds must be visible from each control position. Facilities without a direct coded time source must obtain a time check at the beginning of each shift. (T-0)

8.2.1. Acquire time checks from IFR facilities equipped with a coded time source, the USNO (Defense Switch Network (DSN) 312-762-1401) or **http://tycho.usno.navy.mil/simpletime.html**, a radar facility that provides approach service, host nation ARTCC/area control center responsible for the terminal area, or a GPS/DVRS/DALR/DTAS source. (T-0)

8.2.2. Set clocks to within 15 seconds of time source. Check clocks immediately after the facility goes on backup power and again 30 minutes after. If found to be inaccurate, check clocks hourly until restoring normal power. **Note:** Wind sensor equipment that provides a reliable clock must be checked at the beginning of each shift unless connected to a direct coded time source. (T-0)

8.2.3. A direct coded time source can be connected directly to the installation Local Area Network (LAN). The LAN must provide a Network Time Protocol (NTP) in accordance with AFI 33- 115V1, Communications and Information to synchronize clocks with a local Global Positioning System (GPS) receiver. (T-0)

8.3. Weather Equipment.

8.3.1. Warning Devices (Not Applicable to Morón AB). Current observations and pertinent severe weather warnings, advisories, and pilot reports must be available at all controller positions. Where this is not possible, set up coordination procedures to ensure changes to the weather promptly reach each controller position. Equip automatic weather displays with a visual and aural alarm system suited to local operational needs. Facilities with multiple weather displays need only have the aural alarms operational at one position. (T-2)

8.3.1.1. FMQ-19 Weather Equipment Display. Controllers shall only issue/use the altimeter setting contained in the official weather observation. (T-0)

8.3.2. Radar Displayed Weather (STARS facilities only). There are no alarms to indicate to the controller/Radar maintenance personnel when there is significant signal loss within the weather channel. To mitigate this problem, the following procedures must supplement guidance located in FAAO JO 7110.65, Chapter 2 Section 6. CCTLRs and NAAMs must ensure these procedures are published in an LOP in accordance with paragraph 5.1 (T-0)

8.3.2.1. At the beginning of every shift check the accuracy of the digitized weather display using the best means available.

8.3.2.2. Relay known weather channel status during position relief for all DAAS display control/assist positions.

8.3.2.3. If a weather channel discrepancy is noted, document the problem and notify maintenance. Ensure appropriate NOTAM is issued.

8.4. Recorders. Refer to AFMAN 13-215, Volume 3, *Airfield Operations Equipment Systems*, for records requirements/procedures. (T-3)

8.4.1. DELETED

8.4.1.1. DELETED

8.4.1.2. DELETED

8.4.1.3. DELETED

8.4.1.4. DELETED

8.4.1.5. DELETED

8.4.1.6. DELETED

8.4.1.7. DELETED

8.4.1.8. DELETED

8.4.1.9. DELETED

8.4.1.10. DELETED

8.4.1.11. DELETED

8.4.1.12. DELETED

8.4.1.13. DELETED

8.4.1.14. DELETED

8.4.1.15. DELETED

8.4.1.16. DELETED

8.4.1.17. DELETED

8.4.2. DELETED

8.4.3. DELETED

8.4.4. DELETED

8.4.4.1. DELETED

8.4.4.2. DELETED

8.4.4.3. DELETED

8.4.4.4. DELETED

8.4.4.5. DELETED

8.4.4.6. DELETED

8.4.4.7. DELETED

8.4.4.8. DELETED

8.4.4.9. DELETED

8.4.5. DELETED

8.4.5.1. DELETED

8.4.5.2. DELETED

8.4.5.3. DELETED

8.4.5.4. DELETED

8.4.5.4.1. DELETED

8.4.5.4.2. DELETED

8.4.5.4.3. DELETED

8.4.5.5. DELETED

8.4.5.6. DELETED

8.4.5.7. DELETED

8.4.5.8. DELETED

8.4.5.8.1. DELETED

8.4.5.8.2. DELETED

8.4.5.8.3. DELETED

8.4.5.8.4. DELETED

8.5. Primary Crash Alarm System (PCAS). Define procedures and conditions for activation in the AOI. Limit agencies with two-way telephones to the control tower, AM (or agency responsible for secondary crash net as required), fire department, and the medical center. Additional agencies may have receive-only capability. The tower PCAS should have a visual system indicating when each two-way party on the PCAS picks up the handset. If monitor capability exists, CCTLRs must identify procedures for checking the monitor PCAS in an LOP. During real-world emergencies, trainees may only activate the PCAS if the trainer/monitor has the capability to monitor and transmit over the PCAS. (T-2)

8.5.1. When mobile/temporary facilities are operated and circumstances make installation of a PCAS impractical, establish an alternate system and procedures for emergency response and notification. Include these procedures in an LOP. (T-2)

8.6. Land Mobile Radios (LMR). Each LMR system supporting ATC and aerodrome operations must terminate in the control tower console if enough transmitter and receiver selection switches and speakers are available. (T-3)

8.6.1. Control towers with digital LMRs will establish an LMR net "Tower Talk Group" dedicated for use between vehicle operators and ATC, solely for the purpose of operating on the CMA. (T-3)

8.6.2. In the event that a Tower Talk Group cannot be established, CCTLRs must establish procedures to eliminate unnecessary transmissions (background noise) in an LOP. (T-3)

8.7. Airfield Lighting Systems.

8.7.1. Equip the control tower with the capability to operate airport lighting systems and visual aids. Name an agency responsible and define procedures in an LOP for operating the airport lighting when the tower closes. **Note:** Where pilot controlled lighting systems are installed, establish a letter of agreement, as applicable.

8.7.2. DELETED

8.7.3. DELETED

8.8. Multiple Instrument Landing Systems (ILS) Facilities:

8.8.1. ILS facilities installed on intersecting or parallel runways may operate simultaneously, provided the ILS facilities operate on separate, non-interfering frequencies and an operational requirement for simultaneous operation exists. Verify noninterference by FAA flight inspection.

8.8.2. ILS facilities at opposite ends of the same runway must have an interlock to prevent simultaneous operation. Assign distinctly different identifier codes. (T-1)

8.8.2.1. If the facilities are on common frequencies, assume interference (both glide slope and localizer). Do not disable the interlock to allow simultaneous operation. (T-1)

8.8.2.2. If the facilities are on discrete non-interfering frequencies and weather is Visual Meteorological Conditions (VMC), personnel may bypass the interlock to allow simultaneous localizer and or glide slope operations to accommodate facility installation, maintenance restoration, preventive maintenance, or flight inspection. If a flight inspection discovers interference between localizers and documents the location of interference, permit simultaneous localizer radiation during VMC weather and issue a NOTAM that restricts the facility to the in- tolerance portion of the ILS signal. For example: "RUNWAY 32 LOCALIZER UNUSABLE INSIDE MM or 1.5 DME." (T-1)

8.8.2.3. Specify conditions for bypassing interlocks in an LOP with maintenance. (T-1)

8.8.3. The CCTLR of the facility responsible for NAVAID status must set up procedures to verify the operational status of the inactive ILS, to include standby transmitters of each operating system, at least once daily during a low density traffic period. (T-0)

8.8.4. Maintenance personnel must get ATC approval before making radiation checks on the inactive ILS. (T-3)

8.9. ILS Equipment Requirements for Operation. Loss of transmitter or monitor redundancy of either subsystem does not affect the category. Instructions concerning temporary RSI outages

in paragraph 7.21. also apply. If the localizer Far Field Monitor (FFM) becomes inoperative on a Category II system, ensure Airfield Management sends a NOTAM downgrading the ILS to Category I until repair of the FFM. Temporary bypass of the FFM does not affect Category I systems. (T-1)

8.10. Automated ATC Systems.

8.10.1. MAJCOM ATCALS OPR is the authoritative source for the implementation, operation, and maintenance of the automated ATC systems they support and maintain (e.g., Programmable Indicator Data Processor [PIDP], Simulation and Integration of Ground, Network, and Air Links [SIGNAL], etc.). Operator Manuals and Version Description Documents (VDDs) are directive in nature.

8.10.1.1. CCTLRs must review each PIDP/Flight Data System (FDS) VDD to determine any operational or procedural impact and, when necessary, issue a facility directive describing the functional or procedural changes. (T-3)

8.10.1.2. Prior to operational use of a new program update, the PIDP Performance Evaluation Test (PET) must be accomplished indicating the date and individuals performing the tests. If any portion of the test fails, do not initialize the new program until MAJCOM ATCALS OPR has authorized its use. (T-2)

8.10.2. The FAA is the authoritative source for the security and software maintenance of the ATC systems they support (e.g., DTAS, ETVS, DVRS, etc.). System Technical Instructions are directive in nature. Prior to operational use of a new program update, accomplish the applicable test plan, indicating the date and individuals performing the tests. (T-0)

8.10.3. Computer hardware, software programs, and databases used to provide operational ATC services are mission and life critical resources. Do not tamper with, alter, or use these resources for other than their intended purposes. Load only authorized software programs provided by the system software manager. All personnel share the responsibility for protecting these resources.

8.10.4. Immediately withdraw from service any ATC computer resource suspected of malfunctioning due to tampering, abuse or introduction of unauthorized programs (e.g., software viruses, etc.). Physically disconnect all interface connections to other computer systems and maintain the suspect computer or software for analysis. Notify the FAA/DoD support personnel and AOF/CC for submittal to MAJCOM ATCALS OPR. (T-3)

8.10.5. Digital Terminal Automation Systems (DTAS).

8.10.5.1. Operational Use.

8.10.5.1.1. Do not use STARS data when the system is released to maintenance. (T-0)

8.10.5.1.2. Verify and document the operational status of all DTAS sub-systems daily. Retain documentation IAW 7.1.5.5.5. above. (T-0)

8.10.5.1.3. Advise affected facilities when STARS equipment will not be operational at normal startup time, when it fails, is shut down, resumes operation, or when inter-facility data transfer (IFDT) is lost/regained. (T-3)

8.10.5.2. Data Entries. Facility directives must prescribe the use of the scratch pad and the specific responsibility for System Status Area (SSA) entries to include current ATIS alpha character, current general system information and system altimeter setting. (T-3)

8.10.5.3. Display Data. (T-0)

8.10.5.3.1. When a malfunction causes repeated discrepancies of 300 feet or more between the automatic altitude readouts and pilot reported altitudes, inhibit the automatic altitude report (Mode C) display until the malfunction has been corrected.

8.10.5.3.2. Display Mode C on untracked (unassociated) targets within each controller's area of responsibility by setting the altitude filters to encompass all altitudes within the controller's jurisdiction. Set the upper limits no lower than 1,000 feet above the highest altitude for which the controller is responsible. In those stratified positions, set the upper and lower limit to encompass at least 1,000 feet above and below the altitudes for which the controller is responsible. When the position's area of responsibility includes down to the airport field elevation, the facility must set the lower altitude filter limit to encompass the field elevation, so that provisions of FAAO JO 7110.65 **Chapter 2**, and Chapter 5 may be applied. CCTLRs may authorize the temporary suspension of this requirement when target clutter is excessive.

8.10.5.4. Automation Program Changes.

8.10.5.4.1. NAAMs must review all applicable documentation issued by the FAA/DoD support facility pertaining to changes in their automated system and database to determine any operational or procedural impact. NAAMs must notify facility CCTLRs and Chief of Maintenance of any changes that impact operations or procedures. (T-0)

8.10.5.4.1.1. When necessary, coordinate any procedural, and airspace change(s) with the ARTCC.

8.10.5.4.1.1.1. DELETED

8.10.5.4.1.2. NAAMs must coordinate functional changes with the host ARTCC requiring modification of inter-facility adaptation.

8.10.5.4.1.3. DELETED

8.10.5.4.1.4. Facilities without a dedicated NAAM or civilian equivalent must establish procedures in an LOP for effectively managing automation program changes with the FAA, DoD, or HN facilities.

8.10.5.4.1.5. If the STARS facility CCTLR has determined the use of the satellite airport database feature containing emergency airport data be available for controller use, NAAMs must complete the following tasks: (T-0)

8.10.5.4.1.5.1. NAAMs must validate the following items listed in TI 6191-409; STARS FSL TCW/TDW Operator's Manual, paragraph 7.2.; using the website, **http://avnwww.jccbi.gov/datasheet/;or** FLIPs.

8.10.5.4.1.5.1.1. Airport/heliport elevation (in feet).

8.10.5.4.1.5.1.2. Longest runway or helipad identified.

8.10.5.4.1.5.1.3. Longest runway length (in feet) (n/a to heliports).

8.10.5.4.1.5.1.4. Longest runway width (in feet) (n/a to heliports).

8.10.5.4.1.5.1.5. Longest runway/heliport composition.

8.10.5.4.1.5.1.6. Universal Communications frequency.

8.10.5.4.1.5.1.7. Pilot controlled lighting availability.

8.10.5.4.1.5.2. NAAMs must verify the facilities STARS satellite airport database no later than the 10th of each month. This may be accomplished in conjunction with STARS monthly checks, but must be completed no later than the 10th of each month. Incorporate appropriate procedures into NAAM OI and monthly checklists. If no discrepancies are noted, document the findings in a monthly report. State that the monthly airport/heliport information contained in the facility's DAAS database has been verified and is accurate as of the date indicated. Include the radar facility CCTLR or civilian equivalent as an addressee for distribution and retain a copy on file for one year.

8.10.5.4.1.5.3. If the monthly database verification has noted discrepancies, NAAMs shall submit an Adaptation Change Request (ACR) to the OSF no later than the 10th of the month. Document in a monthly report that the monthly airport/heliport information contained in the facility's DAAS database has been verified and inaccuracies have been identified as of the date indicated. Include details in the monthly report specifying when software updates are expected from the OSF. Include the radar facility CCTLR as an addressee for distribution and retain a copy on file for one year.

8.10.5.4.2. NAAMs must ensure, as a minimum, the three latest builds of software and associated documentation, to include adaptation, are available.

8.10.5.5. Automatic Acquisition/Termination Areas.

8.10.5.5.1. Facility CCTLRs must: (T-0)

8.10.5.5.1.1. Establish automatic acquisition areas for arrivals and over-flights at ranges permitting auto-acquisition of targets prior to the ARTCC/STARS-to-STARS automatic handoff area when the center is in the radar data processing mode.

8.10.5.5.1.2. Coordinate with adjacent automated facilities to ensure that computer handoffs will be initiated only after the aircraft is within their facility's automatic acquisition area. Where this is not feasible due to airspace assignment, facility directives must require use of an appropriate procedure specified in FAAO JO 7110.65 to confirm the identity of all aircraft handed off prior to auto-acquisition.

8.10.5.5.1.3. Establish automatic acquisition areas for departing aircraft one mile or less from the runway end.

8.10.5.5.1.4. Establish automatic termination areas for arriving aircraft one mile

or less from the runway threshold or, at satellite airports, the minimum radar coverage range/altitude, whichever is greater.

8.10.5.5.1.5. Identify which operating position is responsible for determining if automatic acquisition of a departure track has occurred in an LOP. **Note:** This is intended for operations where automatic acquisition responsibility could be confused, e.g., uncontrolled airports within a single sector or between different radar sectors that serve the same airport.

8.10.5.6. Minimum Safe Altitude Warning (MSAW) and Conflict Alert (CA).

8.10.5.6.1. Minimum Safe Altitude Warning (MSAW)/ Low Altitude Alert System (LAAS). Radar facilities that have MSAW/LAAS capabilities must set MSAW/LAAS requirements in accordance with AFI 11-230.

8.10.5.6.2. CCTLRs must ensure that aural test of the MSAW speakers located in the operational positions are included as part of the equipment checklist required during each shift. The purpose of this inspection is to ensure the aural alarm is functioning and audible to the appropriate operational personnel.

8.10.5.6.3. When their continued use would adversely impact operational priorities, CCTLRs may temporarily inhibit the MSAW, the approach path monitor portion of MSAW, and/or the CA functions. Except when equipment or site adaptation problems preclude these functions from being used, a brief written report must be sent to the MAJCOM OPR for ATC whenever they are inhibited. A copy of the report must be forwarded to HQ AFFSA.

8.10.5.6.4. CCTLRs are authorized to inhibit CA at specific operating positions if an operational advantage exists.

8.10.5.6.5. Utilize the most current MSAW Database.

8.10.5.7. Magnetic Variation of Video Maps/GEO Maps at STARS Facilities. CCTLRs, in coordination with TERPS and the NAAM, must ensure that the magnetic variation of radar video maps/geo maps, MSAW, Digital Terrain Maps (DTM) and radar site settings coincide. The magnetic variation must be verified annually and a change of two degrees or more requires accomplishing/recompiling the affected map(s). **Note:** The video map is the primary reference for maintaining radar antenna alignment.

8.10.5.8. MSAW DTM Updates. Updates to DTM maps will be provided for each site through their supporting OSF. **Note:** Requests for new or recompiled DTMs requires approximately ten weeks to build and deliver.

8.10.5.9. Mode C Intruder (MCI) Alert Parameters. Use the nominal value of parameters specified in the appropriate NAS Configuration Management Document and Site Program Bulletins for the MCI Alert functions, except for the base altitude parameter, as specified in the paragraphs below, unless a waiver to adjust the base altitude parameter value is received from the MAJCOM OPR for ATC.

8.10.5.9.1. MCI Alert base altitude must be set at any value between ground level and 500 feet AGL at the discretion of the facility CCTLR. Any instance of base altitudes above 500 feet AGL must be documented and forwarded to the MAJCOM.

8.10.5.9.2. CCTLRs are authorized to temporarily adjust the MCI Alert base altitude at a sector (s)/position(s) when excessive MCI Alerts derogate the separation of IFR traffic. For the purpose of this section, temporary is considered to be of less than 4 hours duration, not necessarily continuous, during any calendar day. The following is required when MCI base altitude is adjusted:

8.10.5.9.2.1. Log each occurrence on the facility log when this procedure is being used, including the sector/position and temporary altitude.

8.10.5.9.2.2. Documentation must be forwarded to the MAJCOM OPR for ATC if it is determined that a temporary adjustment of the MCI base altitude does not meet the needs of the sector/position.

8.10.5.9.3. CCTLRs are authorized to inhibit the display of MCI Alert at specified sectors/position.

8.10.5.9.3.1. CCTLRs must develop and publish procedures for CA suppression and use of Military Alert Suppression Zones (MASZ).

8.10.5.10. Operational Mode Transition Procedures.

8.10.5.10.1. CCTLRs must develop and maintain current detailed procedures in an LOP for transition to and from the various automated and non-automated modes of operation. **Note:** The architecture of STARS allows for different operational modes during display component failures. For example, system component failure could result in positions within the same facility operating in a non-automated mode with reduced functionality. Another example, a system component failure could result in positions within the same facility operating in Emergency Service Level (ESL) or Full Service Level (FSL) mode. Facilities are encouraged to take advantage of this capability to minimize the impact of display system outages.

8.10.5.10.2. The transition plans must include as a minimum:

8.10.5.10.2.1. Transition decision authority; e.g., the individual responsible for making the transition decision.

8.10.5.10.2.2. Specific transition procedures.

8.10.5.10.2.3. Detailed checklists specifying the duties and the responsibilities for the Watch Supervisor and other appropriate positions. The checklist must include, as a minimum, the following information/procedures:

8.10.5.10.2.3.1. Transition decision authority.

8.10.5.10.2.3.2. Coordination/notification procedures (intra- and inter-facility).

8.10.5.10.2.3.3. Specific duties/responsibilities (including detection and resolution of potential conflicts). **Note:** Whenever possible, coordination/notification procedures and duties/responsibilities should be listed in the sequence in which they are to be accomplished.

8.10.5.11. Radar Selection Procedures. CCTLRs must develop and maintain current detailed procedures for selection of radar sites in a LOP. **Note:** The architecture of

STARS allows for the selection of up to 16 different radars including short range and long-range radars at each display. This could result in positions within the same facility working and receiving radar information from different radars. Facilities are encouraged to take advantage of this capability to minimize the impact of radar outages, blind areas, limited radar coverage, etc.

8.10.5.11.1. The selection plans must include as a minimum: (T-0)

8.10.5.11.1.1. Radar selection decision authority; e.g., the individual responsible for making the radar selection decision.

8.10.5.11.1.2. Specific radar selection procedures. 8.10.5.11.1.3.1. Radar selection decision authority.

8.10.5.11.1.3. Detailed checklists specifying the duties and the responsibilities for the watch supervisor and other appropriate positions. The checklist must include, as a minimum, the following information/procedures:

8.10.5.11.1.3.1. Radar selection decision authority.

8.10.5.11.1.3.2. Coordination/notification procedures (intra- and inter-facility). Specific duties/responsibilities (including detection and resolution of potential conflicts). **Note:** Whenever possible, coordination/notification procedures and duties/responsibilities should be listed in the sequence in which they are to be accomplished.

8.10.5.12. Multi-Sensor Radar Operations. CCTLRs must develop detailed procedures for selection and use of multi-sensor radar operations. **Note:** The architecture of STARS allows for the use of multi-sensor radar coverage for the display presentation. This could result in positions within the same facility working in both single sensor slant range mode and multi-sensor mode. Facilities are encouraged to take advantage of this capability to minimize the impact of radar outages, blind areas, limited radar coverage, etc. (T-0)

8.10.5.12.1. Minimum procedures must include:

8.10.5.12.1.1. Decision authority to use multi-sensor coverage: e.g., the individual responsible for making the decision.

8.10.5.12.1.2. Specific multi-sensor radar procedures.

8.10.5.12.1.3. Detailed checklists specifying the duties and the responsibilities for the watch supervisor and other appropriate positions. The checklist must include, as a minimum, the following information and procedures:

8.10.5.12.1.3.1. Decision authority to use multi-sensor radar coverage.

8.10.5.12.1.3.2. Coordination/notification procedures (intra- and inter-facility).

8.10.5.12.1.3.3. Specific duties/responsibilities including detection and resolution of potential conflicts such as transition from a 3 mile separation single-sensor environment, to a 5 mile separation multi-sensor environment. **Note:** Whenever possible, coordination/notification procedures and duties/responsibilities should be listed in the sequence in which they are to be

accomplished.

8.10.5.13. Single Site Coverage Operations. Facilities may adapt all sort boxes utilizing radar separation defined in FAAO JO 7110.65, **Chapter 5**, Section 5.

8.10.5.13.1. This adaptation may be used provided:

8.10.5.13.1.1. A significant operational advantage will be obtained using single site coverage. Consideration must be given to such aspects as terminal interface, radar reliability, etc.; and appropriate procedures are identified in a LOP. As a minimum the LOP must:

8.10.5.13.1.1.1. Define areas in which the adaptation has been modified.

8.10.5.13.1.1.2. Permit 3 NM separation in the modified area.

8.10.5.13.1.1.3. Accommodate local procedural changes.

8.10.5.14. Single/Multi-sensor Mode Operation: To reduce the possibility of false targets when long range radar is malfunctioning, released to maintenance, or out-of–service (OTS):

8.10.5.14.1. CCTLRs shall designate facility watch supervisors to notify automation personnel and/or radar maintenance personnel to take off line any radar site that is out of service or released for maintenance. (T-0)

8.10.5.14.2. If automation personnel or radar maintenance personnel are not immediately available to disable/take off line the radar site, the CCTLR may designate in a facility operating instruction for the watch supervisor to use STARS keyboard entry located in FAA TI 6191.409/TI 6191.410 to exclude the radar track data and RTQC reporting until automation/maintenance personnel arrive.

8.10.5.14.3. An entry shall be made in the daily events log stating that the sensor was taken off line/data was excluded and when returned to service. (T-0)

8.10.6. Programmable Indicator Data Processor (PIDP). Units using PIDP must comply with the following procedures: (T-0)

8.10.6.1. CCTLR must establish procedures to check PIDP Minimum Safe Altitude Warning (MSAW) alarms. Checks must be accomplished at the beginning of each shift and documented on the AF IMT 3616.

8.10.6.2. Except for emergency requirements, submit any needed changes in site-unique PIDP or MSAW data at least 120 days in advance. Submit changes to MAJCOM for review and forwarding to HQ AFFSA/A3S, Oklahoma City, OK. Refer to AFI 11-230 for MSAW processing procedures. Each PIDP-equipped unit must maintain the following site-unique data, as appropriate:

8.10.6.2.1. AF IMT 3645, *PIDP Submission Form*.

8.10.6.2.2. Current 15 and 60 NM MSAW charts and data.

8.10.6.2.3. Reflection discrimination data, if used.

8.10.6.2.4. Low Altitude Alerting System (LAAS) data products for TPX-42/980B.

8.10.6.2.5. LAAS data products for TPX-42-only versions of Digital Bright Radar Indicator Tower Equipment (DBRITE).

8.11. Radar Mapping Equipment. The minimum radar mapping capability for commissioning an approach control service is a dual video mapper, adequate map overlay (if available), or computer-generated display. **Note:** AN/GPA-134 Video Mapper meets the dual video mapper requirement.

8.11.1. Do not use grease pencil markings, plastic tape, compass rose grid lines, range marks or other innovations in place of an adequate map overlay, video map, or computer generated display.

8.11.2. If map overlays are available and coincidental with a flight inspected video map presentation, they do not need to be flight-inspected.

8.11.3. DTAS Maps.

8.11.3.1. The designated NAAM must coordinate with DoD OSF to create and maintain video maps as directed by the CCTLR. (T-0)

8.11.3.2. CCTLRs must specify in an LOP procedures for using optional maps. (T-0)

8.11.4. AN/GPA-134. CCTLRs must ensure designated representative has completed training and documentation outlined in the AN/GPA-134 QTP, prior to building official maps. (T-0)

8.11.4.1. Prior to installation, a designated representative must ensure current accurate data was used during the building process of digital video maps. Quality checking and comparing the source document data with the map data print out sheet can accomplish this. Ensure that the data used to build the map agrees with the data found on the source document. CCTLRs must certify completion of the quality measure by signing a file copy of the map data printout sheet.

8.11.4.2. The CCTLR must ensure that video maps are created, uploaded, and maintained. Ensure locally generated MVA maps are verified against the current MAJCOM approved MVA chart before operational installation in the facility.

8.11.4.3. CCTLRs must coordinate video map source information annually with TERPS personnel.

8.11.4.4. Procedures.

8.11.4.4.1. Ensure primary and backup designated airspace map and your unit’s most critical maps are programmed and placed on separate slim line/circuits.

8.11.4.4.2. Designate one position on the slim line panel as the maintenance test map. This map acts as an internal system monitor for digital map accuracy. Refer to Time Compliance Technical Order "Adjustment for Delay."

8.11.4.4.3. Restrict access to the system. Do not load any software other than the system software provided with the map creation unit laptop.

8.12. Battery-Powered Transceivers. Facilities equipped with battery-powered transceivers, such as PRC-113, must ensure that they are maintained in a state of readiness. Transceivers must be checked at least once a month. (T-3)

8.13. Air Traffic Control Facility Modifications. ATC facilities should consult the *United States Air Force Air Traffic Control Tower and Radar Approach Control Facility Design Guide* for facility modification information.

8.14. Facility Security. CCTLRs must secure the ATC operating area at all times. Install a cipher lock or other suitable locking device at initial entry points to control towers and radar facilities. Install similar devices at the main entry point to the control tower cab and the radar operations room. Secure other entry points to the tower cab and radar operations room with manual devices, such as dead bolts, locks, hasps, etc. Secure mobile radar and tower facilities to the maximum extent possible. (T-3)

8.15. Gas Mask (MCU-2A/P) Communication System Interface Equipment. This equipment is designed to enhance operations through improved connectivity and contamination control in Mission-Oriented Protective Posture (MOPP) environments faced with an increased threat of biological/chemical warfare attacks. OG/CCs determine whether or not to procure the MCU-2A/P communication system interface equipment at their locations based on the type facility. MCU-2A/P communication system interface is dependent upon host ATC equipment compatibility requirements. The communication system interface equipment is listed in the MCU-2A/P Technical Order 14P4-15-l, paragraph 5-34 and Illustrated Parts Breakdown section, Page 6-6, Index 22.

8.15.1. All system interface architectures use the form/fit/function replacement "150-ohm" microphone element. Microphone elements are ordered through base supply.

8.15.2. The "Y" cords are identified by model number and are ordered directly from the manufacturer. Units requiring new/replacement parts should contact HQ AFFSA for contact information. **Note:** The MCU-2A/P communications system interface equipment is not compatible with the AN/GSC-37 communications system.

8.16. Emergency Warning and Evacuation Alarms. When evacuation alarms are installed, AOF/CCs must coordinate with ATCALS Maintenance to ensure written procedures are established in an LOP for testing the alarms. Document results of the test on the AF Form 3616. (T-3)

8.17. Certified Tower Radar Display (CTRD). DBRITE, Tower Display Workstation (TDW), and Remote ARTS Color Display (RACD) in USAF control towers are certified radar displays. Radar displays must be certified for use by maintenance personnel according to USAF and FAA guidance. (T-0)

8.18. Headsets. Wireless headsets must not be used by ATC personnel. (T-0)

8.19. Airfield Automation System (AFAS) Requirements.

8.19.1. All information required to be available to controllers (paragraphs 5.7.1., 5.7.4. - 5.7.5.) while operating in a control position may be maintained in AFAS. **Note 1:** Crosswind component must not be displayed by the AFAS or JET systems. **Note 2:** Web browser or internet capability is only authorized with the AFAS system to obtain official air traffic or aerodrome related information. (T-3)

8.19.2. All pages must have a link back to the Status Information Area (SIA) or home page for instant access to current airfield/weather information. (T-3)

8.19.3. The color red shall not be used in development of the AFAS pages (button, background, font, etc.) except for emergency checklists or highlight runway occupied status. The use of red for any other purpose is strictly forbidden. (T-3)

8.19.4. The following information is required to be visible from every page: (T-3)

8.19.4.1. ATIS code.

8.19.4.2. Runway in use.

8.19.4.3. Wind direction and speed.

8.19.4.4. Current altimeter setting.

8.19.5. CCTLRs must ensure the AFAS equipment is verified during each shift as part of the equipment checklist. (T-3)

8.19.5.1. CCTLRs must incorporate procedures in an OI to notify the AFAS administrator when the system indicates a Flight Data Input Output (FDIO) or JET/N-TFS failure. (T-3)

8.19.6. CCTLRs must establish procedures to ensure a restart of each AFAS machine occurs every seven calendar days. (T-3)

8.19.7. CCTLRs must establish procedures to back up the AFAS database to the backup folder on any AFAS machine NLT the last day of each month. Quarterly, the database backup must be transferred to an external storage device (e.g., CD or external hard drive). (T-3)

8.20. Unauthorized Devices. Electronic devices used for the purpose of entertainment must not be stored/operated in IFR control rooms or control tower cabs. (T-0)

8.21. Wireless Local Area Network (WLAN). WLAN is not authorized in USAF ATC facilities. (T-0)

8.22. Cellular Telephones. Cellular telephones must be powered off in all IFR control rooms and control tower cabs. (T-0)

8.23. Control Tower Plastic Window Shades. For ATC facility modifications, ATC facilities should consult the *USAF Air Traffic Control Tower and Radar Approach Control Facility Design Guide*.

Chapter 9

CONTROL TOWER OPERATIONS

9.1. Light Gun Operations.

9.1.1. Attach AFVA 13-221, *Control Tower Light Signals*, or card listing the color codes and meanings contained in FAAO JO 7110.65, **Chapter 3**, Section 2 to each light gun. (T-0)

9.1.2. If equipment allows, adjust each gun to give a red light when turned on.

9.1.3. Do not beam signals through sunshades. (T-0)

9.1.4. Light gun operational checks must be accomplished at least once per day and when practical with aircraft or vehicles. (T-0)

9.2. Takeoff or Landing Direction Determination. In accordance with FAAO JO 7110.65, **Chapter 3**, Section 5, control tower personnel determine the runway in use, unless procedures in an LOP delegate this function to another agency.

9.2.1. Coordinate with terminal radar facilities before changing the runway in use. (T-0)

9.2.2. Notify the terminal radar facility, AM, base weather facility, and ARTCC (if appropriate) when the runway change is complete. (T-0)

9.3. Control of Ground Traffic in CMAs. Specific ATC approval is required prior to entry into CMA, as defined in the AOI.

9.4. Wind Limitations on Control Towers. The base civil engineer must make a structural evaluation of the control tower to determine the maximum wind velocity the tower can safely withstand. Make the evaluation a permanent part of control tower real estate records. The OG/CC establishes a maximum safe wind velocity for control tower operations. The maximum safe wind velocity and control tower evacuation plans must be incorporated in the AOI. (T-3)

9.5. Functional Use of Certified Tower Radar Display (CTRD). In addition to criteria established in FAAO JO 7110.65, MAJCOMs may authorize the use of the tower radar displays to ensure separation between successive departures, between arrivals and departures, and between over-flights and departures within the surface area for which the tower has responsibility only if: (T-2)

9.5.1. There is no additional airspace delegated to the tower.

9.5.2. Tower local controllers receive radar training and certification commensurate with their radar duties. Items/tasks trained in local control PCGs and documented in the CFETP must satisfy these requirements.

9.5.3. An LOP exists with the IFR facility having control jurisdiction, clarifying the additional functions tower is authorized to perform. The LOP must outline:

9.5.3.1. The process for a transition to non-radar procedures or the suspension of separation authority in the event of a radar outage. Procedures must not impair the local controller's ability to satisfy responsibilities regarding the aircraft operating on the runways or within the surface area for which the tower has responsibility.

9.5.3.2. Procedures for giving and receiving radar handoffs or point-outs that do not impair the local controller's ability to satisfy responsibilities regarding the aircraft operating on the runways or within the surface area for which the tower has responsibility.

9.5.3.3. Procedures for ensuring radar separation do not require the tower to provide radar vectors.

9.5.4. Operational applications of certified tower radar displays other than those outlined above require HQ AFFSA approval.

9.5.5. CCTLRs may determine, on a case-by-case basis, if the DBRITE maintenance indicator or the STARS supplemental display is adequate to support operations during short-term outages. Do not use the DBRITE maintenance indicator or the STARS supplemental display on a permanent basis.

9.6. Wear of Sunglasses in Control Towers. Do not wear polarizing or photo activated darkening system type sunglasses while performing ATC duties. (T-0)

9.7. Protection of 360 Overhead Pattern. Locations that use the overhead pattern must develop local procedures and coordinate ATC/aircrew requirements to protect the overhead pattern. Procedures and coordination requirements must be published in an LOP and AOI. Such procedures must not restrict the departing, missed approach, or go-around aircraft to a point or altitude that, once it crosses the departure end of the runway, compromises TERPS obstacle clearance or IFR clearance. Published (flight inspected) IFR TERPS procedures, including missed approach instructions, must not be restricted to protect the VFR/360 overhead pattern. Where the AOI contains specific climb-out instructions to protect the overhead pattern, controllers may use the phrase "EXECUTE LOCAL CLIMBOUT" for locally assigned aircraft only. (T-2)

9.8. Tower Equipment Requirements. Appropriate to assigned mission functions; provide each control tower with the following equipment:

9.8.1. DELETED

9.8.2. Flight progress strip holders.

9.8.3. A landline system that includes an intercom between positions within the facility.

9.8.4. Radio receiver and transmitter controls, and consoles.

9.8.5. Tower radar display.

9.8.6. Weather dissemination and display equipment.

9.8.7. Two wind direction and speed indicators.

9.8.8. NAVAID remote status indicators (where applicable).

9.8.9. Tower and radar coordination system.

9.8.10. Two air traffic control light guns.

9.8.11. Two pair of binoculars.

9.8.12. Airfield lighting control.

9.8.13. Runway barrier controls and status indicators.

9.8.14. PCAS.

9.8.15. Counters for recording traffic.

9.8.16. UHF and VHF emergency/alternate radio systems.

9.8.17. Voice recorders and an adequate supply of recordable data media.

9.8.18. Battery-operated emergency lighting system or flashlights.

9.8.19. Dedicated communications for tower/radar coordination.

9.8.20. Flight Data System.

9.8.21. Automatic Terminal Information Service (ATIS).

9.8.22. RVR equipment for bases with CAT II/III ILS.

9.8.23. Headsets.

9.9. USAF VFR Tower Operations Within Class C Airspace.

9.9.1. When conditions require USAF VFR towers to operate within Class C airspace, the following minimum provisions are required for providing VFR tower services and must be covered in an LOP with the servicing radar agency: (T-0)

9.9.1.1. Tower surface area must be defined.

9.9.1.2. Tower controllers may provide transit authorization of the surface area in accordance with FAAO JO 7110.65. When approving surface area transit requests, tower controllers must use phraseology for operational requests in accordance with FAAO JO 7110.65, IFR surface area transitions will remain under the control of the servicing radar facility.

9.9.1.3. Tower and radar coordination procedures for arrivals must be developed in accordance with paragraph 7.13. of this instruction.

9.9.2. USAF VFR towers, located within Class C airspace, are authorized and may provide the following services within their surface area:

9.9.2.1. Standard separation between successive departures and between arrivals and departures.

9.9.2.2. Visual separation, wake turbulence separation and traffic advisories/alerts between IFR and VFR aircraft.

9.9.2.3. Mandatory traffic advisories/alerts between aircraft in the tower's surface area.

9.10. Aircraft Arresting Systems. Where the Air Force is responsible for control tower services, an LOP must define the following: (T-3)

9.10.1. Coordination between agencies involved in operating the arresting systems. **Note:** Notify AM before releasing arresting systems to barrier maintenance for maintenance or configuration changes.

9.10.2. Configuration of arresting systems. See paragraph 21.1.2.

9.10.3. Intervals to use when sequencing aircraft for successive engagements.

9.10.4. Procedures for remotely controlled arresting systems.

9.10.5. Responsibilities concerning use of aircraft arresting systems.

9.10.6. A training program to include the location, capabilities, and procedures for all installed arresting systems. **Note:** The OG/CC may establish multiple system priorities/configuration to meet local operational requirements.

9.11. Restricted Runway Operations. CCTLRs must develop procedures to warn controllers when vehicles and personnel are on the runway or flight operations to a runway are restricted. For example: Obstruct view of wind indicators by physically placing signs over them or other automated methods using AFAS or other automated wind displays. (T-0)

9.12. Standardized Taxi Routes (STRs). USAF controllers may issue Standardized Taxi Routes (STRs) to DoD base-assigned aircraft only, provided all of the following conditions are met:

9.12.1. The reduced instructions do not permit aircraft to cross any runway(s).

9.12.2. The required operational risk assessment has been accomplished.

9.12.3. The procedures are clearly defined in a base AOI and only in a LOP by exception.

9.12.4. The procedures are MAJCOM approved prior to implementation.

9.12.5. ***Phraseology:*** *"(ACID) RUNWAY (NUMBER) TAXI VIA (STR NAME)."*

9.12.5.1. *Example 1: "ZORO01 RUNWAY THREE SIX LEFT TAXI VIA TEXAN ONE."*

9.12.5.2. *Example 2: "ZORO01 RUNWAY THREE SIX LEFT TAXI VIA TEXAN ONE, HOLD SHORT RUNWAY THREE SIX RIGHT."*

Chapter 10

RADAR OPERATIONS

10.1. Radar Use.

10.1.1. USAF ATC radar systems may be used for:

10.1.1.1. Surveillance of aircraft to assure the effective use of airspace.

10.1.1.2. Vectoring aircraft to provide separation and radar navigation.

10.1.1.3. Vectoring aircraft to final approach.

10.1.1.4. Vectoring aircraft to the airport of intended landing.

10.1.1.5. Monitoring instrument approaches.

10.1.1.6. Providing assistance to pilots of aircraft in distress.

10.1.1.7. Conducting precision or surveillance approaches.

10.1.1.8. Air Base Defense

10.1.1.8.1. If a requirement exists, terminal ATC radar facilities perform radar surveillance functions to support early warning or ensure safe passage of friendly aircraft. Describe controller priorities, procedures, coordination requirements, and areas of responsibilities in an LOP.

10.1.1.9. STARS facility CCTLRs must determine the need to use the satellite airport database feature containing emergency airport data. The use of this feature requires monthly database validation by qualified automation personnel to ensure correct data is contained in the STARS system. Include applicable procedures in facility OI. **Note:** Radar Ready Reference Files (RRF) may be used as a supplement for the STARS satellite airport database. (T-0)

10.1.1.9.1. STARS facility CCTLRs must develop alternate procedures to advise pilots the satellite airport database is unverified if the automation personnel have not completed the verification process by the 10th day of each month. Procedures must include the phrase: *"AIRPORT DATA UNVERIFIED."* (T-0)

10.1.1.9.2. If STARS facility CCTLR determines the STARS satellite airport database will not be used, state restrictions in facility OI.

10.1.2. A facility may remote a radar operated by non-ATC agencies and use it for ATC purposes if the radar is satisfactorily flight checked according to AFMAN 11-225_IP, *U.S. Standard Flight Inspection Manual*. The non-ATC agency must not alter radar information furnished to the ATC facility without prior notification. (T-0)

10.1.3. A controller provides radar service when they have a usable target and determine that presentation and equipment performance are satisfactory.

10.1.3.1. A usable target is one where a return is not missed on more than two consecutive scans along the entire airway/route or arrival/departure control routes for which radar service is provided. For surveillance approaches, a return should be seen on

every scan from the final approach fix to the missed approach point. **Note:** For automated radar systems, consult system specific technical manuals and FAAO JO 7110.65, **Chapter 5**, Section 1. (Not applicable to STARS locations)

10.2. AN/TPX-42 Strapping. Normally strap the AN/TPX-42 1,000' higher than the transition altitude. The negative 1,000' altitude factor applied between the point of strapping and the point of applying local altimeter correction is an inherent part of the signal-processing chain. At locations with low transition altitudes (below 10,000'), strap the TPX-42 2,000' above the transition altitude. This will reduce the number of incorrect altitude read-outs below the transition altitude during periods of low altimeter settings.

10.2.1. Do not use AN/TPX-42 altitude read-outs for separation between the transition altitude and the transition level. During periods of low altimeter settings (between 28.92 and 27.92), altitude read-outs may be unreliable at altitudes within 1,000' below the transition altitude. (T-3)

10.2.2. Facilities with PIDP equipment do not require strapping.

10.3. Range Azimuth Beacon Monitor (RABM).

10.3.1. CCTLRs must provide written guidance (in the form of a facility LOP) for use of the AN/TPX-49A during equipment checks and when verifying beacon range accuracy before providing secondary radar-only service during temporary primary radar outage conditions or when secondary radar service is provided outside the coverage of primary radar. Continually display the AN/TPX-49A generated target to verify system accuracy whenever primary radar is inoperative and secondary radar is in use. If using a code other than 6666, ensure maintenance sets the displayed altitude to greater than 60,000 feet (Flight Level 600) to prevent erroneous TCAS alerts to TCAS-equipped aircraft. (T-3)

10.3.2. Beacon targets may be displaced at a slightly greater range than their respective primary returns when desirable and equipment supports this function. Issue a facility directive specifying the standard relationship between primary returns and the beacon control slash of secondary returns when beacon displacement is elected. The maximum allowable displacement is 1/2 mile applied in 1/4-mile increments.

10.3.2.1. For STARS locations the maximum allowable beacon target displacement which may be specified by the facility CCTLR is ¼ mile applied in 1/8 mile increments.

10.3.3. Continually display the AN/TPX-49A generated target to verify system accuracy when secondary radar service is provided outside the coverage of primary radar.

10.4. Radar Reflectors for Precision Approach Radar (PAR).

10.4.1. The outage of one bracketing reflector, or the outage of the centerline reflector when a single centerline reflector is being used, does not make the PAR unusable provided a suitable alternate method of runway centerline reference is available (approach lights, runway lights, barrier poles, etc.). CCTLRs must determine which returns to use as a temporary replacement for the bracketing reflectors. Verify accuracy of the alternate references through local or formal flight inspection. After flight check determines accuracy, publish guidance for use in a facility directive. (T-3)

10.4.2. Moving Target Indicator (MTI) reflectors must be operational (refer to the appropriate technical order for the minimum number required) when conducting PAR

approaches using MTI radar. The outage of any one of these reflectors makes the PAR unusable in the MTI mode. (T-3)

10.4.3. The AN/GPN-22 and AN/TPN-25 do not use bracketing or touchdown reflectors; they rely on track reflectors to monitor track accuracy for each runway served. The PAR is unusable for a given runway if the system cannot track the corresponding reference reflector. If this condition occurs, the systems will flat-line the glideslope cursor. If the system can track the reference reflector, but the controller cannot view or manipulate track symbols, the system may still be used in the scan-only mode if it is flight checked and procedures are detailed in local directives.

10.5. Radar Glide Path and Course Information. Use the center of the radar target (track symbol for phased array PARs) to determine when an aircraft exceeds the PAR safety limits. Use minimum gain to provide the most accurate position information.

10.5.1. The AN/GPN-22 and AN/TPN-25 use a computer tracking system. Local conditions and equipment performance may limit the use of this equipment to control aircraft without the aid of the tracking system (scan mode only). Commissioning and periodic flight inspections of these radar systems will identify their capabilities and limitations.

10.5.2. During temporary loss or non-availability of the tracking symbology and the controller can verify the radar is otherwise operating normally, the controller may use scan only video to conduct radar approaches provided limitations and procedures are published in an LOP.

10.6. PAR Safety Zones.

10.6.1. PAR Lower Safety Limit Zone. A PAR lower safety limit path ("B" cursor) originates between the end of the runway and a point not closer than 500 feet before the runway point of intercept (RPI) of the glide path. Where possible, "B" cursor origin should be at least 250 feet from the runway end. That area between the "B" cursor and the glide path is the safety zone.

10.6.1.1. The "B" cursor extends upward at an angle one-half (0.5) of a degree lower than the commissioned glide path angle, and ends at an altitude of 250 feet below the established glide path intercept altitude.

10.6.1.1.1. The “B” cursor on the MPN-14K1 can only extend out approximately 6.5 miles. If intercept altitude occurs further out than 6.5 miles, CCTLRs must establish local procedures to aid controllers in identifying this point. (T-2)

10.6.1.2. At some locations, the length of the “B” cursor differs because of differences in glide path angles or intercepts altitudes for the two runways. When this occurs, use the longer "B" cursor length (termination point below the glide path). Using the common "B" cursor expedites use of PAR by reducing maintenance adjustments after a runway change and equipment turnaround.

10.6.1.3. The AN/GPN-22 "B" cursor extends to the length of the "A" cursor. However, safety limits apply for go-around instructions only between the point on the "B" cursor 250 feet below the established glide path intercept altitude and the normal termination point of the approach.

10.6.1.4. A dashed electronic cursor displays the "B" cursor on the elevation portion of the PAR scope for each precision approach. If an equipment malfunction prevents display of the cursor, a suitable substitute may identify the lower safety limit zone.

10.6.2. PAR Upper Safety Limit Zone. This zone is above the glide path. Its dimensions are the same as those established for the lower zone. The upper safety limit path starts at a point in space above the glide path and has the same geometrical relationship to the glide path as the lower path. The upper path rises at an angle one-half (0.5) of a degree greater than the commissioned glide path angle. There is no requirement to display the upper path on the scope.

10.6.3. PAR Lateral Safety Limits. These limits refer to distances on the azimuth portion of the PAR scope. There is no requirement to display lateral safety zone limits on the radarscope; however, a drawing or table depicting lateral safe limits must be available at each PAR position. Table 10.1 Specifies PAR lateral safety limits and approximate displacement distances. The displacement distances are averages and actual distances will vary. Displacement distances for scan type radar are based on a maximum display range of 9 miles. The displacement relationship remains constant for tracking type radar, regardless of the display range selected (8, 15, or 20 miles). Use these distances as a guide for interpreting the precision radar displays. (T-1)

Figure 10.1. Typical PAR Elevation Display.

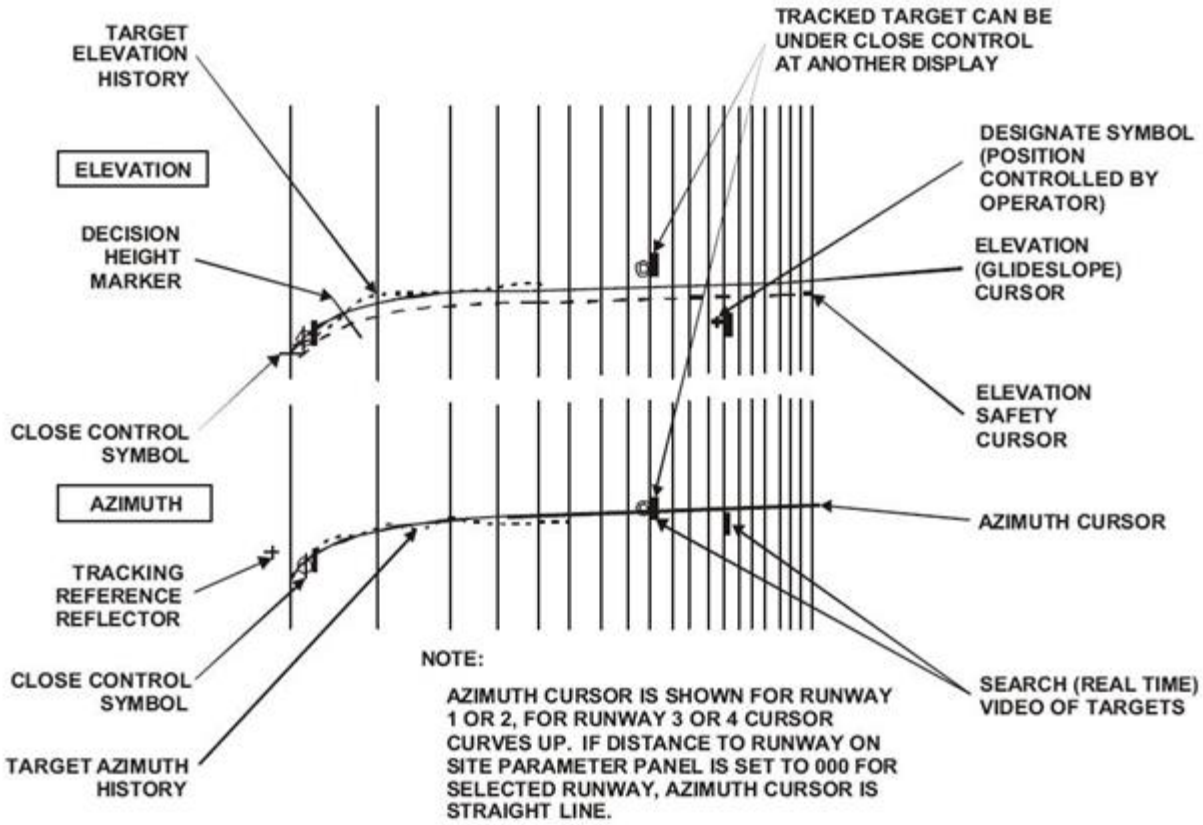

10.7. Decision Height (DH). Mark the DH on the PAR azimuth-elevation zone paths that represent the height above threshold (HATh) elevation approved for the runway in use. Use grease pencil or fluorescent gummed cellophane tape to display the DH if not electronically displayed (not applicable to GPN-22). Display only the DH for the runway in use (see **Figure 10.1**).

Table 10.1. PAR Lateral Safety Limits and Approximate Displacement Distance.

Range	Lateral Limit	Scan Radars	Tracking Radars
6	1200	3/4 inch	1/2 inch
5	1000	3/4	1/2
4	800	½	3/8
3	600	½	3/8
2	400	¼	1/4
1	200	¼	1/4
½	100	¼	1/4

10.8. Use of Precision Approach Radar (PAR)

10.8.1. A radar final controller must not accept more than one aircraft or flight conducting a PAR or ASR approach. **Note:** A standard formation flight conducting a PAR or ASR approach shall not exceed two aircraft. (T-1)

10.8.2. Monitor Instrument Final Approach Courses.

10.8.2.1. In order to use PAR to monitor non-radar instrument approach courses, the PAR Runway Point of Intercept (RPI) must be within 250 feet of the ILS or MLS RPI, and the commissioned flight check angle of the PAR must be within two-tenths of a degree of the ILS or MLS commissioned glide slope angle. Additionally, the PAR final approach course must coincide with the NAVAID final approach course from the final approach fix to the runway. Where the capability exists, the OG/CC must determine if there is a requirement to monitor approaches at their locations in an LOP. (T-3)

10.8.2.2. A radar final controller must not monitor more than four aircraft. If units choose to monitor approaches using the PAR equipment, one of the following conditions must exist: (T- 3)

10.8.2.2.1. The official weather is below basic VFR minima (1,000-foot ceiling and/or 3 miles visibility).

10.8.2.2.2. At night.

10.8.2.2.3. Upon request of the pilot.

10.8.2.3. Where PAR serves a runway that has an ILS, MLS, or visual glide slope indicator, the glide-path, glide-slope angles and RPIs should coincide. An official flight inspection must determine coincidence. Where PAR, ILS, MLS, and visual glide slope indicators are not coincident, publish the deviation in the IFR Supplement. For example: RWY 30-PAR, ILS, and Precision Approach Path Indicator (PAPI) glide-slopes are not coincidental. (T-2)

10.8.2.4. When the mission warrants simultaneous approach monitoring, the CCTLR must outline procedures in an LOP. (T-3)

10.9. Airport Surveillance Radar (ASR) Approach Procedures.

10.9.1. An adequate reference to the runway centerline must be available on the ASR indicator. The video map is an adequate reference when the commissioning flight check establishes permanent echoes or targets. Facilities without a video map must have alignment reflectors to verify course accuracy. Use two runway bracket reflectors or a centerline runway reflector to verify alignment of an overlay (if available), cursor or compass grid line for ASR approaches. MTI reflectors must be operational when conducting ASR approaches using MTI radar when video maps are not available or when using MTI to determine runway centerline reference. (T-3)

10.9.2. Facilities must use a video map to depict the extended runway centerline. A map overlay (if available) may be used during map outages. Use the electronic cursor in an MPN-14 facility during a video map outage, if the cursor de-centering and bearing controls have protective covers. (T-3)

10.9.3. There is no requirement for bracketing reflectors or a video map to provide ASR approaches using the AN/TPN-19. The systems fixed, displayed runway cursor is based on a set geographic location in relation to the ASR antenna and meets reflector, video map and cursor requirements.

10.9.4. Recommended altitudes for ASR approaches must be developed according to AFI 11-230 and be immediately available at each RFC position and ASR indicators. (T-0)

10.10. Standard Terminal Automation Replacement System (STARS).

10.10.1. CCTLRS at STARS locations shall establish procedures in an LOP/Letter of Instruction (LOI) in the event of radar feed failures. Guidance shall include WS/SC actions for maintenance notification and STARS keyboard entries located in FAA TI 6191.409/6191.410 to exclude false radar track data to prevent false target returns. (T-0)

10.10.2. CCTLRs shall establish coordination procedures with radar maintenance personnel to determine realistic response times and maintenance actions. (T-3)

10.11. Radar Performance Checks. Each radar controller is responsible for determining, on a continuous basis, if the quality of their radar display and video fix accuracy is satisfactory for ATC purposes.

10.11.1. The radar performance check must be accomplished at least once each shift. (T-3)

10.11.2. Radar quality and performance are determined by comparing identified targets against data obtained during the commissioning flight check or by using minimum performance criteria determined jointly by maintenance and the CCTLR.

10.11.3. Targets used for comparison checks should be generated by small aircraft, similar in size to those used during the commissioning flight check.

10.11.4. CCTLRs must maintain commissioning flight check data and minimum performance reports for each radar sensor used to provide ATC services. This information must be made readily available for all radar controllers. (T-3)

10.11.5. CCTLRs at locations that use multi-site sensors/radars must ensure that each radar sensor used provides adequate radar and altitude coverage for the type of operations it will be used for. (T-3)

10.11.6. Automated ATC narrow-band radar systems must not be used for operational purposes unless they are operationally validated (certified) by ATCALS maintenance personnel. Non- validated radar sensors (e.g., failed or out of tolerance) must be inhibited from the system until validated for use. An entry must be made on AF Form 3616 when the digitized radar system is validated for operational use and/or when a non-validated radar sensor is inhibited or restored to the operational system. **Note:** These procedures are not intended to be used during normal opening/shift change checklists, but are used when certifying or re-entering into service a radar system that was removed from service. (T-3)

10.11.7. Optimum Antenna Tilt. For deployable mobile radar systems, operate radar units with variable antenna tilt capability at the tilt angle prescribed by the official commissioning flight check or subsequent flight check data incorporated into the most recent ATCALS Evaluation Report.

10.12. Surveillance Antenna Operation in High Wind. Allow the antenna to free-wheel whenever the forecasted/current wind exceeds the maximum defined in the system specific technical orders and ATC conditions permit. CCTLRs must define maintenance notification procedures, and define who is responsible for placing the antenna in the free-wheel mode in an LOP. (T-3)

10.13. Diverse Vector Area (DVA). The CCTLR must coordinate with TERPS and establish a DVA (see FAAO JO 7110.65, Chapter 5 and AFI 11-230) before aircraft may be vectored below the MVA/Minimum IFR Altitude (MIA) while aircraft are executing a departure/climb-out instructions. A DVA provides separation from obstacles in accordance with TERPS diverse departure criteria. (T-0)

10.13.1. When a DVA is established, CCTLRs must include in the facility OI: (T-0)

10.13.1.1. A complete description of the DVA, to include any restrictions and/or free vectoring areas. **Note:** Free vector areas are areas within a DVA in which random vectoring below the MVA/MIA is authorized.

10.13.1.2. Procedures for radar vectoring IFR departures below the MVA/MIA and within 3-5 NM of an obstacle, as applicable.

10.13.2. Depict sectors (areas) and/or radar routes/corridors within which radar vectors are provided.

10.13.3. Restrictions to a DVA must be incorporated in accordance with AFI 11-230. (T-1)

10.13.4. No IFR aircraft climbing within a DVA must be assigned an altitude restriction below the MVA/MIA. (T-1)

10.13.5. Headings must not be assigned beyond those authorized for DVA prior to reaching the MVA/MIA. (T-1)

10.13.6. For climb gradients in excess of 200 feet per nautical mile (FPNM), controllers are required to issue the specific climb gradient and obtain pilot concurrence prior to providing ATC navigational guidance on departure. **Exception:** For Obstacle Departure Procedures

(ODP) and Standard Instrument Departure (SID) procedures, ATC personnel are not required to issue climb gradients in excess of 200 FPNM when the required climb gradient is published. (T-1)

10.14. Designation of Sectors. The CCTLR develops airspace sectorization based on predominant traffic flows, altitude strata and controller workload. Ensure no two controllers provide service or advisories in the same airspace. (T-3)

10.15. Multiple Radar Final Control (RFC) Requirement. The OG/CC specifies the Wing's multiple RFC requirements (more than one RFC position) and ensures enough approaches are flown to maintain controller proficiency. Detail the multiple RFC requirements in the AOI.

10.16. Radar Equipment Requirements. Appropriate to assigned mission functions, a radar approach control or other terminal radar ATC facility has the following equipment:

10.16.1. Flight Progress Boards.

10.16.2. RVR equipment (for locations with CAT II/III ILS).

10.16.3. A landline system that includes an intercom between positions within the facility.

10.16.4. A radar display.

10.16.5. Radio receiver and transmitter controls and consoles.

10.16.6. Weather dissemination and display equipment.

10.16.7. NAVAID remote status indicators (where applicable).

10.16.8. Voice recorders and an adequate supply of recordable data media.

10.16.9. Wind direction and speed indicators.

10.16.10. Flight Data System (FDS), with a collocated clearance delivery position that has independent communications.

10.16.11. Coordinator positions. Authorize independent coordinator positions when necessary due to traffic complexity.

10.16.12. Secondary radar system.

10.16.13. Video mapper.

10.16.14. Battery operated emergency lighting systems or flashlights.

10.16.15. UHF and VHF emergency alternate radio system.

10.16.16. Radar and tower coordination system.

10.16.17. Automated Radar Tracking System (STARS, PIDP, MEARTS, ARTS 3/A, etc.).

10.16.18. Headsets.

10.17. PAR Associated Equipment Requirements. A readily observable and operational ASR display must be available in the operations room at facilities providing PAR only service. At locations where ASR displays are not available, a CTRD maintenance monitor or television slaved from the tower CTRD meets the requirement. The ASR display will aid controllers during radar hand-offs between approach control and PAR. When the ASR display is out of service, PAR services may continue if the CCTLR establishes procedures in an LOP. (T-3)

10.18. Turn-around for ATC Radar. CCTLRs must establish an LOP for notification of personnel working in or around radar units during turn-around operations. (T-3)

10.19. Non-Radar Board. (Not Applicable to Dobbins) Each radar facility (RFC excluded) must maintain and utilize a current facility developed non-radar board. The following items should be included, but not limited to: (T-3)

10.19.1. Transfer of control points.

10.19.2. GPS coordinates (Latitude/Longitude) for significant points.

10.19.3. Diverging radials table.

10.19.4. Holding patterns (include applicable altitudes and maximum holding airspeed).

10.19.5. Available NAVAIDS.

10.19.6. Minimum IFR Altitude Chart.

10.19.7. CCTLRs must coordinate non-radar board information annually with TERPS personnel.

10.20. FAA/USAF Contingency Plan Agreements. The purpose of an FAA Parent Facility Contingency Plan, developed according to FAAO JO 1900.47, is to mitigate impact to the NAS in the event of an ATC facility's loss of ability to provide ATC services. The FAA Parent Facility Contingency Plan should address reciprocal support between USAF and FAA approach control facilities to assume each other's en route/approach control services as much as feasible, in the event of a contingency involving equipment failure. These agreements should also address requirements for FAA assumption of USAF facility airspace, in the event of temporary facility closure or a need to temporarily curtail operating hours, due to circumstances such as deployments or critical staffing levels.

10.20.1. The Air Traffic Services contingency plan authority is an agreement authorizing inter- facility cooperation to proceed with the contingency plan development. For USAF locations, the OG/CC must sign these agreements in lieu of the Facility-2 Air Traffic (AT) Manager and Facility-2 Airway Facilities Manager. (T-0)

10.20.2. The support facility Operational Capability Level (OCL) procedures should encompass each support facility's OCL site specific procedures, contain customized checklists and detailed data or procedures necessary to activate and support the parent facility contingency plan.

10.20.2.1. The information contained in section 3, should incorporate a checklist tailored to each individual facility. Include detailed procedures (including non-radar, if required) for departures, arrivals and en route operations to/from the terminal area, adjacent areas and inter-facility coordination required to accomplish it.

10.20.2.2. The section labeled *Information and/or Actions* common to all facilities may contain general guidance that all facilities need in case of the parent facility's OCL declaration. Outline procedures for reporting to the Air Traffic Control System Command Center when the transfer control of airspace has been stabilized.

10.20.2.3. Each procedures document contains administrative and operational data attachments needed to activate the contingency plan. Attachments include:

10.20.2.3.1. Map of Assets. This is a geographical depiction of physical assets, frequency service volumes, etc. and is used as a tool for developing airspace divestment charts.

10.20.2.3.2. Data Tables. Ensure this contains specific telephone, frequency, navigational facilities and other similar types of physical assets.

10.20.2.3.3. Airspace Divestment Charts. Geographical depiction of airspace delegation derived from parent and support facility map of assets.

10.20.2.4. Additional attachments including maps depicting departure and arrival routes are permitted, as long as detailed procedures are outlined within the actual plan (section 3). Ensure requirements within Section 3 and the attachment match.

10.20.2.5. Other important areas to include are:

10.20.2.5.1. Facility Operating Hours (e.g., when will facilities not be available to participate in the contingency plan).

10.20.2.5.2. The number of days the facility can sustain continuous operations (24 hours, 7 days per week) before augmentation is required.

10.20.2.5.3. A statement that USAF air traffic controllers are deployable assets and can be deployed at any time, affecting the terms of the agreement.

10.20.2.5.4. Limitations of equipment (e.g., radar and radio coverage, control positions available, if any, and options for parent facility controllers to augment USAF staffing, and accepted impact on routine services.

10.20.2.5.5. Due to the uncertain ties regarding automation capabilities, facilities should address the use of automated inter-facility handoff procedures and/or the use of manual handoff until automation capabilities are verified.

10.20.2.5.6. Units must forward proposed support facility authority and support facility OCL procedures to MAJCOM for approval prior to implementation. The request for approval must be signed by the OG/CC (or equivalent) and must contain one of the following statements: (T-0)

10.20.2.5.6.1. Draft requirements (if approved) can be accomplished within existing resources.

10.20.2.5.6.2. Additional (personnel, equipment, funds etc.) resources will be necessary.

10.20.2.5.6.3. A mission impact statement (Will it affect the efficiency/aircraft movement of training mission aircraft at your base?).

10.20.3. Do not enter into the plan if:

10.20.3.1. The support facility agreement is not written to a level that, stand alone, provides the tool to transition to/from the contingency plan.

10.20.3.2. Entering into an agreement will require additional equipment or manpower that the facility is not funded for or currently do not have available. USAF units may support more than one parent facility. For example: An approach control could support

two separate ARTCC facilities, or two USAF RAPCON facilities could mutually support a single ARTCC facility. Units must use caution when entering into more than one support facility agreement. Ensure support responsibilities do not overlap or override another plan in addition to units acting as a support facility. (T-0)

Chapter 11

SPECIAL OPS AND SUPPLEMENTAL PROCEDURES

11.1. Exercises. The AOF/CC must be briefed at least 48 hours in advance of any exercise or inspection that involves AO personnel, facilities to include ATCALS, or airfield (i.e. Operational Readiness Exercises [ORE], Operational Readiness Inspections [ORI] and Major Accident Response Exercise [MARE]). The AOF/CC must approve, in advance, exercises that include removing AO personnel to alternate facilities or to shelter areas. Consider traffic volume and service limitations when coordinating these exercises. (T-3)

11.1.1. WS/SC must ensure ATC facility participation does not degrade services. WS/SC may interrupt or discontinue facility participation in any exercise if flight safety is in question or it interferes with the recovery of emergency aircraft. (T-3)

11.1.2. ATC personnel may wear gas masks in support of OREs/ORIs, consistent with Wing requirements, provided a non-masked safety observer is present. The safety observer must be facility rated and cannot be assigned to any position other than WS. The safety observer must have the authority to direct controllers to remove gas masks in the interest of flight safety. When an aircraft declares an emergency or is in distress, controllers in direct communications with the aircraft must remove the gas mask. **Note:** Controllers wearing a gas mask must be equipped with the Gas Mask Communication System Interface Equipment when actively controlling traffic (see paragraph 8.15). CCTLRs must establish procedures in an LOP. (T-3)

11.2. Supervisor of Flying (SOF). When the SOF performs duties in an ATC facility, describe details in an LOP. When advice is extremely technical, or when the SOF feels that relay of information by the controller could cause an unacceptable delay, the SOF must coordinate with the WS prior to using an ATC frequency to transmit directly to the affected aircraft. Instructions should be limited to preventing a mishap. The SOF must not perform ATC functions or transmit ATC instructions or clearances to an aircraft. A person who commandeers an ATC frequency assumes responsibility for separation of aircraft. (T-2)

11.3. Aircraft Priorities. The OG/CC establishes local aircraft operational priorities in the AOI. Locally developed operational priorities must not take precedence over priorities listed in FAAO JO 7110.65, **Chapter 2**, Section 1 and AFJI 11-204, *Operational Procedures for Aircraft Carrying Hazardous Materials.* (T-0)

11.4. Reduced Same Runway Separation (RSRS). USAF authority for establishing RSRS is designated in FAAO JO 7110.65, **Chapter 1**, Section 1. Accordingly, MAJCOM A3s are responsible for establishing RSRS criteria for their specific commands.

11.4.1. RSRS criteria is based on aircraft characteristics, aircrew training requirements and the responsible air traffic controllers' ability to ensure application of established separation.

11.4.2. Unit level application of RSRS must be developed by affected air traffic control personnel and user units, specifically outlined in either the base airfield operations instruction or a Wing operations letter, and approved by the MAJCOM prior to implementation. (T-2)

11.5. Radar-in-Trail Recovery.

11.5.1. Radar-in-trail recovery procedures must be coordinated through the AOF, Operations Group (and host nation, if required,) approved by the MAJCOM, and detailed in the AOI. If the FAA provides approach control services, procedures must be contained in an LOA and signed by all appropriate individuals. Procedures must address the following: (T-2)

11.5.1.1. Recovery procedures and notification requirements (to include flight lead coordination of trail recovery with ATC prior to taking spacing).

11.5.1.2. Missed approach/break-out/go-around procedures.

11.5.1.3. Lost communications procedures.

11.5.1.4. Spacing requirement within/between flights.

11.5.1.5. Radar-in-trail recoveries must not terminate in PAR or ASR approaches.

11.5.1.6. Radar-in-trail recovery is limited to a maximum of four aircraft.

11.5.1.7. Aircrews conducting radar-in-trail recoveries are responsible for their own separation between elements of their flight while on final for full-stop landings. To ensure appropriate departure separation, multiple practice radar in-trail approaches that do not terminate with a full-stop landing must be conducted only in VMC. During practice approaches in VMC conditions, after an executed low approach/landing, the flight is responsible for their own separation until ATC initiates flight split-ups for individual control.

11.6. Unlawful Seizure of Aircraft. FAAO JO 7610.4 and AFI 13-207 provide guidance regarding unlawful seizure of aircraft. An LOP must define the base response to hijack or theft attempts and identify a single base agency to receive ATC notification. In addition to procedures mandated in FAAO JO 7610.4, ICAO Annexes, and host nation documents, ATCT responsibilities include, but are not limited to: (T-0)

11.6.1. Immediately activating the primary crash alarm system, or notification via landline.

11.6.2. Issuing current position information to fire/crash, security police, base rescue, etc.

11.6.3. Assisting the on-scene commander by forwarding updated information and relaying any orders or instructions.

11.7. Min-Comm/Comm-Out. Departure/inbound procedures for minimum-communications and communications-out operations must be established in the AOI and require MAJCOM approval prior to implementation. Procedures that task or involve the FAA must be defined in an LOA. (T-2)

11.8. Night Vision Device (NVD) use in terminal airspace.

11.8.1. NVDs must only be used as an aid for air traffic controllers to assist in maintaining air traffic situation awareness and airfield surveillance during periods of aircraft operations at airfields with reduced lighting configurations. (T-2)

11.8.1.1. NVDs must be binocular type and must not be affixed to any head strap, helmet or any other retention device. (T-2)

11.8.1.2. Minimum acceptable NVD binocular/tester configuration is available at: **https://wwwd.my.af.mil/afknprod/ASPs/docman/DOCMain.asp?Tab=0&FolderID=OO-OP-AF-20-2-7&Filter=OO-OP-AF-20**

11.8.1.3. Prior to using NVDs, controllers must complete all "Just-in-Time" training. Controllers may access this website from the address located in 11.8.1.2. (T-3)

11.8.1.4. ATC personnel must be trained in the proper use of NVDs. Identify NVD tasks on AF Form 797, with applicable Technical References (TR). Include tasks that reflect use of associated equipment. (T-3)

11.9. Explosives Detection K-9 Teams.

11.9.1. CONUS Locations, Alaska, Hawaii and Guam. ATC facilities will take the following actions if they receive a civil aircraft request for the location of the nearest explosives detection K-9 teams: (T-0)

11.9.1.1. Relay the pilot's request to the FAA Washington Operations Center, AEO-100, via telephone (DSN 851-3750 and Commercial 202-267-3333) providing the aircraft's identification and position.

11.9.1.2. AEO-100 will provide the ATC facility with the nearest location. Have AEO-100 standby while relaying the information to the pilot.

11.9.1.3. After determining the aircraft wishes to divert to the airport provided, the ATC facility will find out the estimated time of arrival and advise AEO-100.

11.9.1.4. If a military installation has an explosives detection K-9 team, during emergency situations and with the concurrence of base officials, advise the pilot that such service is available.

11.9.2. Overseas Locations. ATC facilities receiving a request from a military or civil aircraft must take action according to local resource protection plans and guidance received from local military authorities in accordance with host nation agreements. (T-0)

11.10. Parachute Jump Operations.

11.10.1. Define operational/procedural needs to conduct parachute jump operations in an LOP with parachute jump organizations or responsible individuals. As a minimum, the LOP should contain: (T-3)

11.10.1.1. The description and the location of the drop zone(s) and the conditions of use.

11.10.1.2. The activity schedules.

11.10.1.3. The maximum jump altitudes (Mean Sea Level).

11.10.1.4. Notification procedures.

11.10.1.5. Any other items pertinent to the needs of the ATC system and the users.

11.10.2. Areas designated as permanent jump sites in an LOP may be used repeatedly to minimize coordination. Specific authorization or notification is still required, but not necessarily for each jump.

11.10.3. To the extent possible, advise parachute jumping organizations or responsible individuals of known high traffic density areas or other airspace where parachuting may

adversely impact system efficiency, such as IFR departure/arrival routes, airways, VFR flyways, military training routes, etc.

11.11. Prohibited/Restricted Areas. FAAO JO 7110.65, **Chapter 9**, Section 3 prescribes separation requirements from special use and ATC assigned airspace. In recognition of the fact that several prohibited/restricted areas are established for security reasons or to contain hazardous activities not directly involving aircraft operations, provision is made for exempting these areas from vertical and radar separation minima if the areas have been identified by facility management. The intent in prescribing separation requirements from special use and ATC assigned airspace is to establish a buffer between non-participating aircraft and aircraft operations inside special use or ATC assigned airspace. As such, the buffer serves as an extra safety margin in consideration of possible operational, procedural, or equipment variances. Application of the separation prescribed in FAAO JO 7110.65 is not considered necessary whenever the prohibited/restricted airspace does not contain aircraft operations because these areas typically provide an internal buffer based upon the exact type of activity taking place. In addition, instrument procedures protected areas cannot violate or penetrate SUA without meeting criteria established in AFI 11-230. In making a determination to exempt specific areas, facility managers must be guided by the following: (T-0)

11.11.1. Determine the exact nature of prohibited/restricted area utilization through direct liaison with the using agency.

11.11.2. Coordinate with MAJCOM OPR for ATC during the analysis of area utilization.

11.11.3. The following types of activity are examples of restricted area utilization which often will not require application of separation minima:

11.11.3.1. Explosives detonation.

11.11.3.2. Ground firing of various types.

11.11.3.3. Drone and other unmanned aircraft flight operations.

11.11.3.4. Aircraft operations associated with the above in a safety, observer, or command and control capacity only; e.g., the aircraft is not directly engaging in activity for which the airspace was designated and is operating under VFR.

11.11.4. If area utilization varies between aircraft operations and other types of activity as described above, do not exempt the area from separation requirements unless a significant operational advantage can be obtained.

11.11.5. Restricted airspace with the same number but different letter suffixes is considered to be separate restricted areas. Units may treat these types as one restricted area for the purpose of identifying areas for exemption from separation requirements in order to simplify application of separation minima unless a significant operational advantage can be obtained.

11.12. Reporting Laser Illumination of Aircraft. All ATC facilities must report unauthorized laser illumination of aircraft incidents through the overlying approach control or ARTCC facility. Terminal facilities shall include reported unauthorized laser illumination events on the ATIS broadcast for one hour following the last report and include the following information: (T-0)

11.12.1. ZULU date and time of event.

11.12.2. Call sign or aircraft registration number.

11.12.3. Type aircraft.

11.12.4. Nearest major city.

11.12.5. Altitude.

11.12.6. Location of event (latitude/longitude and/or fixed radial distance).

11.12.7. Brief description of the event.

11.12.8. Color.

11.12.9. Direction of laser as reported by pilot.

11.12.10. Any other pertinent information.

Chapter 12

PROCEDURES FOR ESTABLISHING VFR FLYING AREAS AND TRAFFIC PATTERNS

12.1. VFR Traffic Patterns:

12.1.1. When designing traffic patterns, be sure that: (T-2)

12.1.1.1. They conform to the requirements of paragraphs 12.2. and 12.3. below except when safety or noise problems require adjustments.

12.1.1.2. No unusual or unnecessary maneuvering is required.

12.1.2. When traffic patterns for two or more airfields are close together or overlap, coordinate letters of agreement regarding safe operations. The Airfield Operations Board reviews these LOAs. (T-2)

12.1.3. Coordinate revised traffic patterns with ATC agencies and the MAJCOM OPR for ATC. (T-2)

12.2. VFR Traffic Pattern Types:

12.2.1. Establish rectangular and overhead patterns at each USAF airfield, joint-use airfield and overseas airfield controlled by the USAF, as applicable to mission needs. Use LOAs to provide the desired traffic pattern at airfields under the control of foreign governments or agencies other than the USAF. (T-2)

12.2.2. Develop closed traffic procedures. Closed traffic is a maneuver that allows an aircraft making successive patterns to stay in the normal traffic flow without exiting and reentering the pattern. (T-2)

12.2.3. Bases may establish an additional rectangular pattern for light aircraft. This pattern provides adequate separation from normal rectangular and overhead pattern traffic. (T-2)

12.2.4. Establish separate helicopter patterns. These patterns are not necessary if the rectangular or light aircraft patterns meet operational needs without creating congestion. (T-2)

12.3. VFR Traffic Pattern Altitudes. Establish traffic pattern altitudes by rounding up to the next 100-foot level relative to airfield elevation. For example, the traffic pattern altitude for a 1,000-foot traffic pattern with a field elevation of 260 feet would be 1,300 feet above mean sea level. Traffic pattern altitudes must provide a minimum of 300 feet obstruction clearance. Use the traffic pattern airspace criteria as depicted in FAAO JO 7400.2, *Procedures for Handling Airspace Matters*, to determine the area to be evaluated for obstacle clearance. (T-0)

12.3.1. Rectangular pattern: 1,000 feet above highest field elevation (1,500 feet if a lower altitude causes a noise problem).

12.3.2. Overhead pattern: 1,500 feet above highest field elevation (2,000 feet if the 1,500 foot rectangular pattern is used or if a lower altitude causes a noise problem).

12.3.3. Light aircraft pattern: At least 500 feet above highest field elevation. In all cases, ensure adequate separation from normal rectangular pattern traffic.

12.3.4. Helicopter patterns: Establish specific altitudes that ensure adequate separation from traffic in other patterns.

12.3.5. Closed traffic: The altitude specified usually corresponds to the altitude of the pattern for which closed traffic is established.

12.4. Environmental Impact Analysis and Air Installation Compatible Use Zone (AICUZ). Before making changes to local VFR flying areas, VFR traffic patterns or altitudes, analyze proposals for impact based on the published AICUZ study and potential environmental impact. Submit AF Form 813, *Request for Environmental Impact Analysis*, to the base civil engineering environmental planning function for approval (see 32 CFR 989, Environmental Impact Analysis Process). The Environmental Impact Analysis Process must be completed prior to making any decision to implement the proposed change. Advise the base civil engineer when the proposed change has been implemented. (T-0)

Chapter 13

ATC TRAINING PROGRAM

13.1. Purpose. The purpose of training in the ATC career field is to qualify air traffic controllers for position certifications, facility ratings, skill-level advancement and facility management positions to support wartime readiness and peacetime operations. ATC training programs consolidate and standardize common training tasks and doctrine while integrating Air Force (AFI 36-2201 and AFMAN 36-2234), MAJCOM, and unit directives.

13.2. ATC Training Program Structure. ATC training program structure consists of four parts and is designed to standardize the flow of all ATC training.

13.2.1. Front Load Training (FLT).

13.2.1.1. Part I - Local Area Knowledge.

13.2.1.2. Part II - Facility Equipment.

13.2.2. Facility Continuation Training (FCT).

13.2.2.1. Part III - Position Certification.

13.2.2.2. Part IV - Duty/Management Certification.

13.2.3. After the supervisor completes an initial evaluation, CCTLRs must determine where controllers (all skill levels) will enter the training program, either in Part I, II, or III. (T-3)

13.3. Training OI (TOI) Construction. AOF/CC must ensure a TOI is developed. The TOI will establish policy and procedures for implementing and defining the responsibilities of all personnel involved in the program. The TOI must expand those areas where further explanation is required and standardize local training procedures. Each unit must develop, implement and administer each program in accordance with this instruction, AFI 36-2201, and AFMAN 36-2234. The TOI should not restate training requirements, procedures, or responsibilities already published. Address all facets of ATC training in the TOI to include, but not limited to:

13.3.1. Training Team responsibilities. (T-1)

13.3.2. Newcomer's Indoctrination. CCTLRs must ensure a Newcomer's Indoctrination Program is developed in accordance with Attachment 7 and AFI 36-2201. CCTLRs may tailor indoctrination checklists to meet local mission requirements. (T-1)

13.3.3. Upgrade/Position certification/award of SEI and stop training circumstances. (T-1)

13.3.3.1. Requests for certification and processing channels. (T-1)

13.3.3.2. Local documentation requirements. (T-2)

13.3.4. Recurring, Review, and Supplemental Training (See **Chapter 14**). (T-1)

13.3.5. Radar/tower simulator usage and non-radar training requirements. (T-1)

13.3.6. Training program review procedures and documentation requirements. (T-1)

13.4. Master Training Plan (MTP). MTP must be developed in accordance with AFI 36-2201 and contain the following: (T-1)

13.4.1. CFETP/AFJQS/QTP. Document in accordance with AFI 36-2201. (T-1)

13.4.2. Master Task List (MTL)/Master Task and Technical Reference (MTTR). HQ AFFSA develops, maintains and publishes the USAF ATC MTTR. Each facility is required to maintain, publish and utilize a local MTTR. USAF/Local MTTR can serve as an MTL if the MTTR identifies which tasks coincide with each position. (T-1)

13.4.3. Certification Guides (Part I, II, III and IV). (T-1)

13.4.4. AF Form 797. Per AFI 36-2201, **Chapter 6**, the AF Form 797 is a continuation of the CFETP Part II, defining locally unique tasks. (T-1)

13.5. Certification Guides (Part I, II, III and IV). All ATC certification guides will be developed in accordance with AFMAN 36-2234. Develop Part I and II guides along with separate PCGs for each position requiring certification (Part III). Part IV training will utilize applicable ATCTS and locally developed task certification guides (TCGs) as required. (T-1)

13.5.1. Guides are designed in a block or blocks of instructions. Align tasks in a logical order for training (simple to complex). **Note:** An unqualified 3-level must meet the block objectives before entering into the next block. (T-1)

13.5.1.1. The CCTLR, with assistance of the NATCT, shall review PCGs annually to ensure complete task coverage. Document annual review in TRB minutes. (T-1)

13.5.1.2. A comprehensive task analysis will only be required when a new task or position is introduced. (T-1)

13.5.1.3. The NSE/TSN will test and evaluate trainees on their attainment of required knowledge and proficiency against established standards for each CFETP/AF Form 797 task item at the end of each block of instruction and completion of the PCG. (T-1)

13.5.2. Part I, II and III guides will contain: (T-1)

13.5.2.1. Objectives. An objective is a precise statement of the learned capability, the condition and the standard required. Refer to AFMAN 36-2234 for guidance on developing an objective statement. (T-1)

13.5.2.2. Technical References (TR), MTTR line numbers, or STS items. (T-1)

13.5.2.3. Simulation requirements. (T-1)

13.5.2.4. Non-Radar Training (if applicable). Outline training procedures using the radar simulator to the maximum extent possible. (T-1) Non-radar training may be in a separate training guide.

13.5.2.5. Time Limits. Calendar days, factoring in weekends, holidays and off-duty days, in which the trainee is authorized to complete the block. Time limits must be identified for apprentice, prior facility experienced, and non-prior facility experienced controllers. (T-1)

13.5.2.5.1. Training guide time limits must be reviewed annually or as needed, by the CCTLR and NATCT, and adjusted accordingly. Base adjustments on the average time required to complete a training guide. (T-1)

13.5.2.5.2. Adjustments made to training times will be documented and maintained for a minimum of one year.

13.5.3. Part IV Duty/Management Training/Certification. Guides will contain the above requirements with the exception of simulation and non-radar training. (T-1) Units must use the published ATCTS products. (T-1) As necessary, units should supplement ATCTS with MAJCOM, local TCG or other training requirements. (T-2)

13.5.4. After award of SEI and subsequent 5-level, controllers can be classified as "with prior experience."

13.6. Records and documentation.

13.6.1. Master Training Record. NATCTs must establish a standardized training record for each facility, updated monthly, as a minimum, to template and standardize the most current training requirements and documentation (e.g. monthly proficiency, recurring and review training items requiring documentation). (T-1)

13.6.2. Individual Training Records. Use AF Form 623 ONLY. AF Form 623B, three ring binders, and other folder configurations are NOT AUTHORIZED. Records must be available to the trainee, trainer, WS and immediate supervisor. (T-1)

13.6.2.1. All 1C1X1, 13MX, and GS-2152 personnel who are position certified, facility rated, or in training must maintain a current AF Form 623. All other personnel (e.g., MAJCOM, HQ, etc.) shall retain AF Form 623. **Note:** All TERPS Specialists/Managers must maintain a current AF Form 623. (T-1)

13.6.2.2. Training records of former active duty controllers who are subsequently hired to work in the same facility, as a civilian controller, are transferable to the same GS-2152 duties. Individual facility certifications/ratings are also transferable from active duty to GS-2152 duties in the same facility, provided the individual meets the criteria in either **13.6.2.3** or **13.6.2.4** below.

13.6.2.3. At the discretion of the CCTLR, position certifications/facility ratings for prior military controllers who are re-hired and report for duty into the same facility within 30 days as a civilian controller may be recognized as valid and current and have no requirement for a special evaluation and will retain original annual certification date.

13.6.2.4. At the discretion of the CCTLR, position certifications/facility ratings for prior military controllers who are re-hired in to the same facility more than 30 days, but less than 270 days since ratings and certifications were cancelled may be recognized as valid and current, contingent on the successful completion of a special evaluation to demonstrate proficiency.

13.6.2.5. For GS-2152 personnel who are Experiencing Difficulty in Training (EDIT), consideration must first be given to existing term of employment when considering initiating corrective actions. Supervisors should, based on the term of employment, contact the Civilian Personnel Flight (CPF) for more guidance, and consult PMD-13, Handbook for Measuring Employee Performance, when determining proper actions required. (T-1)

13.6.2.6. Document completion of all QTP training on the inside cover of the AF Form 623 in Part II, *ECI/CDC Participation, Etc.* Remove the applicable AF Form 797 from the associated QTP and insert into the appropriate tab of the AF Form 623s. (T-1)

13.6.3. CCTLRs will ensure all discrepancies, identified in the NATCT's training records inspection report, are corrected monthly. (T-2)

13.6.4. Format. Maintain the following items in each 1C1X1, 13MX and GS-2152 personnel training record in the prescribed tabular format: (T-1)

13.6.4.1. Tab A: All current AF Form 1098, *Special Task Certification and Recurring Training*.

13.6.4.2. Tab B: Entries made on AF Form 623a, *On-The-Job Training Record - Continuation Sheet*. Enter in the following order:

13.6.4.2.1. Training evaluations.

13.6.4.2.2. Position certifications.

13.6.4.2.3. Other documentation as required.

13.6.4.3. Tab C: 1C1X1 CFETP Part II/III.

13.6.4.4. Tab D: HQ AFFSA AF Form 797s.

13.6.4.5. Tab E: MAJCOM and Unit AF Form 797s.

13.6.4.6. Tab F: AF Form 3622 / AF Form 2096. **Note:** Only include AF Form 2096s that pertain to award of upgrade skill level and SEIs.

13.6.4.7. Tab G: Previous Year's AF Form 1098, Airman Written Test Report (until submitted for CTO certification) and any documents required by Higher Headquarters (HHQ) and facility management. **Note:** AETC Form 156, *Student Training Report*, will not be maintained in AF Form 623; however, NATCT/TSN personnel must safeguard this form until awarded the 5-skill level.

13.6.5. Forms disposition and documentation must be accomplished in accordance with AFI 36-2201 and 1C1X1 CFETP. (T-1)

13.6.6. CFETP/STS Third-Party Certification. AFI 36-2201, **Chapter 6**, provides third-party certification criteria. The 1C1 Air Force Career Field Manager (AFCFM) has appointed the NSE/TSN as the third party certifier during the position certification process. **Note:** This authority may be delegated to the ANSE/ATSN positions upon successful completion of the NSE QTP. (T- 1)

13.6.6.1. The 1C1X1 CFETP, Part II, section A, does not have a Certifying Official column due to the certification evaluation process and the NSE/TSN serving as the third party certifier. Qualified trainers will initial the "Trainer" column to certify the completion of a training task.

13.6.6.2. STS tasks requiring training in multiple positions shall be opened in the CFETP for the first position and remain open until no further training is needed on the task and/or facility certification is achieved. Document completion of the task in the appropriate

training evaluation. Units shall document these procedures in either the facility PCGs or TOI. (T-2)

13.6.7. Certification of AOSS knowledge/task items will only be accomplished by a certified (SSgt 7-level or higher) AOSS or NAAM. Certification of NAAM knowledge/task items will only be accomplished by a certified NAAM. If unit personnel are not available to certify the items, MAJCOM or HQ AFFSA AOSS personnel who have completed task certifier training may certify the tasks. (T-1)

13.6.8. Only qualified TERPS civilian specialists or military personnel with a 357 SEI will provide TERPS upgrade training/certification. Personnel other than the trainer, who are also a task certifier, must task certify the TERPS qualification training. If unit TERPS personnel are not available to act as trainers/task certifiers, MAJCOM TERPS Managers/AOF/CC shall delegate the responsibility in writing to another location, MAJCOM or HQ AFFSA/XA. A written copy of this delegation of training responsibility shall be retained in the TERPS trainee's training record. (T-1)

13.7. Evaluations. Must be accomplished in accordance with AFI 36-2201 and the following: (T-1)

13.7.1. Supervisor Initial Evaluation. Supervisors must conduct initial evaluations on all trainees in accordance with AFI 36-2201, Chapter 6. (T-1)

13.7.1.1. CCTLRs may use the initial evaluation to determine where to place the individual in training.

13.7.1.2. Technical School Graduates. Supervisors will report STS training deficiencies to the technical school by calling the Customer Service Information Line (CSIL), DSN 597-4566, at Keesler AFB.

13.7.1.3. Initial evaluations are required on all personnel within 60 days of initial assignment and prior to the start of qualification training.

13.7.1.4. Retain the initial evaluation in the AF Form 623 until either Permanent Change of (Duty) Station (PCS) or Permanent Change of Assignment (PCA).

13.7.2. Training Evaluations. As a minimum, conduct evaluations in accordance with AFI 36-2201, **Chapter 6**, and the following requirements:

13.7.2.1. Frequency. Complete evaluations on controllers in position training at least every 14- calendar days. Evaluations on other duty/management training (e.g. 7-level, trainer, and management positions) will be conducted at least once monthly. **Note:** All qualification/upgrade training requires an initial training evaluation. (T-1)

13.7.2.2. Trainers must complete an initial training evaluation on each trainee for every position within the facility. (T-1)

13.7.2.3. Mandatory Items. Name, inclusive dates of evaluation, position, position start date and total calendar days allowed for position, specific STS tasks covered during the evaluation period, time spent in each category of training (live, simulator, non-positional), a determination of Satisfactory (SAT) or Unsatisfactory (UNSAT) progress for the evaluation period, and other comments. Include all interruptions to training (stop training days, to include reason), trainee's comments, if necessary, and signature blocks

for trainee, trainer, WS, NATCT/TSN and CCTLR. Additionally, the AOF/CC must review and sign training evaluations for trainees in EDIT status. (T-1)

13.7.3. EDIT Evaluations. CCTLRs must identify and document, on AF Form 623a or suitable substitute, trainees who are not progressing satisfactorily as EDIT and in the training evaluation specify corrective actions to be taken. CCTLRs must document on AF Form 623a or suitable substitute when a controller is no longer in EDIT status. CCTLRs will determine frequency of EDIT Evaluations. (T-1)

13.7.4. Stop Training. CCTLRs should only consider the use of stop training when further training is not possible or is detrimental to the mission. CCTLRs will determine the need for placing an individual in stop training. (T-1)

13.7.5. Additional Training Time. CCTLRs may approve additional training time for trainees who exceed position/qualification time limits. CCTLR extensions may not exceed 50 percent of the total PCG time. CCTLR extensions may be granted for each block or for the entire position. CCTLR extensions must be documented on an AF Form 623a or suitable substitute and maintained in the trainee's AF Form 623 until facility rating or position certification requirements are met. (T-1) The MAJCOM OPR for ATC may approve additional training extensions after the CCTLR extension has been exhausted.

13.7.5. **(AFGSC)** When requesting a MAJCOM training extension, submit the following to the AFGSC A33S Airfield Operations Workflow in standard MFR format: Trainee name, DAS, training start date, position start date, total training time received, EDIT status if applicable, extension time received, amount of MAJCOM extension time requested, training completion date.

13.7.6. TERPS Training. At MAJCOM cells and HQ AFFSA/A3A, in lieu of CCTLR, use appropriate training manager.

13.8. HQ AFFSA Airfield Operations SharePoint website /Instructional Technology.

13.8.1. HQ AFFSA maintains a data storage location for unit training material at the HQ AFFSA Airfield Operations SharePoint website. Units must use the ATC Operations, Procedures and Training SharePoint website to load their local information. Local information, as a minimum, is defined as local PCGs/QTPs, MTTRs, AF Form 623 form overprints, monthly training, and local publications. NATCT/TSN personnel must be granted administrator privileges, from HQ AFFSA, in order to provide their facility controllers with updated and current ATC information. Air Force Portal registration, and ATC Operations, Procedures and Training SharePoint website membership, is mandatory for all controllers. (T-1)

13.8.1.1. NATCTs must develop and administer training to all ATC personnel on accessing HQ AFFSA Airfield Operations SharePoint website. As a minimum, the following items will be covered:

13.8.1.1.1. Accessing HQ AFFSA Airfield Operations SharePoint website.

13.8.1.1.2. Navigating through ATC reference and training information.

13.8.1.1.3. Use of the MTTR.

13.8.1.1.4. Computer Based Training (CBT) access and utilization.

13.8.1.1.5. Printing training or reference documents.

13.8.2. Simulation**.**

13.8.2.1. Simulation Usage. CCTLRs must ensure the following. Usage logs are utilized and retained for 6 months. Training is provided, as needed, to run stand-alone or network scenarios. A sufficient number of administrators and assistants are trained to operate and maintain equipment. ATCSE Program Specialist must maintain a readily available copy of the most current manuals. (T-1)

13.8.2.2. Simulation Equipment. Administration level access to simulation systems will be limited to the authorized system administrator and designated assistants. Only authorized software may be loaded on ATCSE, as applicable. An outage log will be maintained (and retained for one year) to track and describe system/workstation malfunctions. (T-1)

13.8.2.2.1. Simulation and Integration of Ground, Network, and Air Links (SIGNAL) simulation program. Units may load additional software on the computers utilizing SIGNAL, with the approval of the Designated Approval Authority in coordination with the Network Control Center. For SIGNAL software technical support, contact HQ AFFSA/A3S, Tinker AFB, OK at DSN 884-7004.

13.8.2.2.2. Radar simulator training system (STARS-based) refer to your NAAM and/or AOSS.

13.8.2.2.3. Radar simulator (PC Based) PAR simulators refer to your CCTLR and/or ATCSE Program Specialist.

13.8.2.2.4. For Tower Simulation System (TSS) (including PAR blue/gold) support, contact the appropriate simulator training company via TSSC. For telephone support, NATCT/TSN personnel should use the number(s) provided during installation.

13.8.2.2.5. Contact your MAJCOM ATC OPR for any issues that cannot be resolved through listed technical support.

13.8.2.3. Simulation Scenarios. CCTLRs must ensure a sufficient number of scenarios are developed to meet or exceed normal traffic levels and complexity. Scenarios must be incorporated in appropriate PCGs. Scenarios may be used to supplement position/facility certifications and provide proficiency training. (Not applicable to locations without simulation equipment). (T-1)

13.9. *Special Tactics Combat Control Team (CCT) Training.* ***CCT personnel (AFSC 1C2X1) require ATC qualification training in USAF, ANG, or AFRC facilities. Each CCT member must meet medical qualifications for ATC duty and possess an Airman Written Test Report or CTO Certificate. Training of CCT personnel will follow the same local requirements and guidelines as 1C1X1 personnel. (T-1)***

13.9.1. CCT personnel may not work unmonitored until after they have obtained a CTO certification. (T-1)

13.9.2. CCT personnel may not be used to monitor or train 1C1X1 personnel. (T-1)

13.10. Withdrawal from ATC Duty. AFI 36-2101, and 14 CFR, Part 65, require controllers to have an FAA Air Traffic Control Specialist (ATCS) certificate. Failure to earn or to comply

with the requirements to hold an FAA ATCS certificate will initiate withdrawal action. Unit commanders initiate AFSC withdrawal and/or reclassification actions in conjunction with ATCS certificate suspension. AFPC/DPSIT is the final approval authority of AFSC withdrawal. (T-1) The MAJCOM OPR for ATC is the final approval authority for recommending ATCS certificate retention. (T-2)

13.10.1. ATC managers must identify controllers who demonstrate substandard performance to the squadron commander at the earliest time, in order to correct the substandard performance or obtain a suitable replacement. (T-2)

13.10.2. When withdrawal, disciplinary or other administrative actions are appropriate, do not allow one action to substitute for or delay the other. If more than one category of withdrawal is merited, the OSS commander will make the final determination of the most appropriate category of withdrawal in order to expedite resolution of pending actions. (T-2)

13.10.3. ATCS certificate withdrawal applies to military personnel holding a 1C1X1 or 13M3 primary or secondary AFSC.

13.10.4. Airfield Operations Officers holding the 13M1 AFSC, who fail to complete training for upgrade to 13M3 within established time limits IAW AFI 13-204 Volume I, are eliminated from training IAW AFI 36-2101.

13.10.5. ATCS certificate withdrawal is not applicable to GS-2152 personnel.

13.10.6. Contingency commanders who return a controller to home station for failure to comply with mission capability requirements will send an MFR to home station commander and MAJCOM Functional Manager (MFM) documenting information IAW paragraphs A14.2.2., A14.4.1.2. and A14.4.1.3. A controller returned to home station for failure to obtain or maintain an ATC rating at a contingency location is not qualified to perform further ATC duties unless approved by MFM that has functional oversight. The MFM will review contingency commander actions and provide home station unit commanders a recommendation to reinstate or withdraw an individual's ATCS certificate. (T-1)

13.11. Withdrawal Categories. There are three categories of withdrawal action applicable to military controllers (AFSC 1C1X1 and 13M3): 1) medical disqualification, 2) failure to maintain mandatory qualification standards other than medical, and 3) failure to obtain or maintain a rating. Sample memorandums and checklists associated with suspending/withdrawing a military controller's FAA ATCS certificate and withdrawing ATC AFSCs are provided at **Attachment 12 - Attachment 17**.

13.11.1. Criteria for each withdrawal category are outlined below:

13.11.1.1. Medical Disqualification. The condition of Fear of Controlling (FOC), if substantiated, will be a medical category of withdrawal. FOC is a non-medical term for a specific phobia as listed in the most current, Air Force Surgeon General approved version of the Diagnostic and Statistical Manual (DSM). It is medically disqualifying, and a military psychiatrist or psychologist must diagnose this condition. (T-1) If a controller professes a FOC (Attachment 13) the OSS Commander will accomplish the following: (T-2)

13.11.1.1.1. Suspend the individual's ATCS certificate (**Attachment 12**).

13.11.1.1.2. Refer the individual to the flight surgeon.

13.11.1.1.3. If after medical review, the individual is not diagnosed as suffering a specific phobia, as listed in the most current version of DSM, and the individual persists in the claim of FOC, consider the person as "self-eliminated" and withdraw from the career field under the category "failure to maintain mandatory qualification standards other than medical" (**Attachment 17**). Determine if the local flight surgeon considers the individual a hazard to flight safety.

13.11.1.1.4. If the individual does not suffer from a specific phobia and abandons the claim of FOC, then return the controller to duty.

13.11.1.1.4.1. A qualified controller must monitor the returned controller in every position in which the controller is certified until determining control practices are not a hazard to flying safety. The individual must successfully pass a special evaluation for each position certification held.

13.11.1.1.4.2. The facility CCTLR will determine what requirements are needed prior to re-entering an unqualified controller into training.

13.11.1.2. Failure to Maintain Mandatory Qualification Standards Other Than Medical (**Attachment 17**). Determination that a condition exists which could affect flying safety and ATCS certificate withdrawal is necessary.

13.11.1.3. Failure to Obtain or Maintain a Rating (FTOR) (**Attachment 14**). Use these procedures for controllers in upgrade and qualification training. Do not recommend controllers for AFSC withdrawal until adequate training and evaluations substantiate FTOR. ATC managers may base withdrawal action on a controller's inability to complete the facility's simulator training program, if the simulator scenarios are not more difficult than actual routine traffic.

13.11.2. For GS-2152 personnel, failure to obtain or maintain ratings for the position held or failure to maintain required medical standards, as specified in AFI 13-204v1, para 5.3.2., are grounds for termination of employment.

13.11.2.1. Supervisors should carefully monitor GS-2152 controllers' progress in qualification training, in order to identify performance problems while they are in probationary status. DoD civilian employee controllers unable to obtain or maintain ratings during the probationary period do not require a PIP to be established. Supervisors should contact the CPF for guidance if considering terminating a DoD employee during the probationary hire period. (T-1)

13.11.2.2. When DoD civilian employee controllers fail to meet performance requirements after the probationary period, the supervisor should contact CPF for available options to terminate employment, based on failure to meet absolute standards as specified in the applicable GS-2152 SCPD. After the one year probationary period, a supervisor must develop a PIP to facilitate correction of the employee's performance deficiencies. If deficiencies are not corrected within specified time limits, the PIP (rather than the employee's AF Form 623) will be used to support termination of employment. See Chapter 5 of AFI 36-1001, *Managing the Civilian Performance Program*, and contact the CPF for additional guidance. (T-1)

13.11.3. DELETED

13.11.4. DELETED

13.12. Withdrawal and Reinstatement Procedures and Notification: (**Attachment 16**)

13.12.1. Units shall notify MAJCOM OPR for ATC and Base Training Manager (BTM) of any pending withdrawal actions for all categories including administrative and whether or not the withdrawal action should be "For Cause." (T-2)

13.12.1.1. For withdrawals based on medical disqualification, flight surgeon and clinical representatives process packages directly with the MAJCOM Surgeon General. Forward medical withdrawals according to AFI 36-2101. (T-1)

13.12.1.2. When the basis for withdrawing the AFSC is for conditions or actions over which the airman had control, withdrawal action will be qualified as "For Cause." Examples of "For Cause", include loss of security clearance due to misconduct, drug abuse, alcohol involvement, failure to progress in training (for reasons within their control), substandard duty performance or other acts that led to AFSC withdrawal.

13.12.2. MAJCOM OPR for ATC will:

13.12.2.1. For all withdrawal actions (other than medical), recommend AFSC withdrawal or reinstatement action to OSS commander.

13.12.2.2. For all withdrawal actions (other than medical), inform OSS commander whether or not the withdrawal action should be "For Cause" and, if appropriate, recommend termination and/or recoupment of the selective reenlistment bonus (SRB). (T-3)

13.12.2.3. Notify HQ AFFSA/XA of completed withdrawal action. Include the following information: (T-1)

13.12.2.3.1. Name, rank and last four of SSN.

13.12.2.3.2. Skill level (3, 5, 7, 9 for enlisted controllers, 1 or 3 for officers). 13.12.2.3.3. Reason for withdrawal.

13.12.2.3.3. Reason for withdrawal.

13.12.2.3.4. If trainee is a 3-level and the reason is FTOR, add the date entered training in the facility and the date entered training in the last position.

13.12.2.3.5. Date of controller suspension.

13.12.2.3.6. Primary location and facility assigned.

13.12.2.3.6.1. If applicable, AOR deployment location. 13.12.2.3.7. Whether withdrawal was "For Cause".

13.12.2.3.7. Whether withdrawal was "For Cause."

Chapter 14

ATC RECURRING, REVIEW, AND SUPPLEMENTAL TRAINING

14.1. Recurring Training. All controllers must accomplish recurring training during the month indicated and/or scheduled by the NATCT. Semi-annual training must be conducted once every 6 months and annual training must be conducted once every 12 months. NATCTs must ensure the following items, including technical references, are scheduled, trained and outlined in the TOI. (T-1) All items must be supplemented with any locally developed material pertinent to the unit's operations. (T-2)

14.1.1. The following items will have training conducted semi-annually. (T-1)

14.1.1.1. Anti-Hijack Training. TR: FAAO JO 7110.65, FAAO JO 7610.4, FAAO JO 1600.75, and AFI 13-207.

14.1.1.2. Wake Turbulence. TR: FAAO JO 7110.65 and CBT A-3.

14.1.1.3. Alternate Facilities (if applicable). TR: LOPs.

14.1.1.4. Bird Aircraft Strike Hazard (BASH) Reduction Program. Conduct prior to the bird migratory seasons. TR: FAAO JO 7110.65, AFPAM 91-212, Bird/Wildlife Aircraft Strike Hazard (BASH) Management Techniques, CBT A-7 and LOPs.

14.1.1.5. Simulated Flameout Procedures (SFO). TR: FAAO JO 7110.65, JO 7610.4, CBT-G-7, (and LOP, if applicable).

14.1.1.6. NVD procedures (if applicable) for all tower controllers. TR: LOPs.

14.1.2. The following items will have training conducted annually. (T-1)

14.1.2.1. Electromagnetic Interference (EMI). TR: AFI 10-707 and DoD FLIP General Planning Guide, FAAO JO 7110.65, CBT-R-10.

14.1.2.2. Aircraft Characteristics and Performance. TR: FAAO JO 7110.65 and/or locally developed training material. At locations where exercises and aircraft deployments occur, ensure controllers are trained on aircraft characteristics prior to exercise/deployment date. Review annually and make adjustments as required.

14.1.2.3. Tower Visibility Observations for all tower controllers. TR: FAAO JO 7110.65, AFMAN 15-111, AFMAN 15-124, *Meteorological Codes*, and AT-G-60.)

14.1.2.4. Special Aircraft Operations by Law Enforcement Organizations (if applicable). TR: FAAO JO 7110.65 and FAAO JO 7110.67.

14.1.2.5. Snow Control Operations (if applicable). TR: LOPs.

14.1.2.6. Crew Resource Management (CRM). TR: AT-M-06A and CBT-G-23.

14.1.2.7. Generator Training (if applicable). TR: LOPs.

14.1.2.8. Vehicle Control for all tower controllers. TR: FAAO JO 7110.65, LOPs

14.1.2.9. Tactical Approach/Departure procedures (if applicable). TR: LOP.

14.1.2.10. Thunderstorm Training. All controllers must accomplish annually prior to storm season. TR: HQ AFFSA AO SharePoint.

14.1.2.11. Non-Radar Training (conduct monthly) (Not Applicable at Dobbins ARB). All controllers certified in a radar control and/or associated assist position, excluding RFC, must complete at least one non-radar scenario per month. Conduct non-radar training using Air Traffic Control Simulation Equipment (ATCSE) and/or a facility developed non-radar board. TR: FAAO JO 7110.65, and CBT-A-5. **Note:** At locations where the FAA or host nation assumes responsibility for the USAF radar facility's airspace during radar malfunction, controllers must be trained to provide initial non-radar separation until such time that the airspace is transferred back to the USAF. Units with radar UTC taskings must train on basic non-radar procedures. (T-1)

14.1.3. Review Training. NATCTs must solicit additional training from the ATC Staff (AOF/CC, CCTLR, NSE and NAAM). HQ AFFSA and MAJCOMs may initiate review training. (T-2)

14.1.4. Supplemental Training. NATCTs must coordinate with the CCTLR to ensure HQ AFFSA and MAJCOM messages, local procedural changes, and other matters applicable to airfield operations necessary for the safe management of aircraft movement are trained and documented in accordance with the message requirements. (T-1)

14.2. Monthly Training Requirements. These include HQ AFFSA and MAJCOM recurring training, HQ messages mandating training, and local requirements as determined by ATC managers.

14.2.1. NATCTs must develop and publish monthly recurring/review/supplemental training requirements for all personnel in a monthly training letter. Retain monthly training letters for one year. (T-1)

14.2.2. All monthly recurring/review/supplemental training will be documented on an AF Form 1098. (T-1)

14.2.3. Individuals on leave, TDY, or other absences must accomplish all monthly training requirements within 30 days after returning to duty. (T-1)

14.3. Monthly Training Testing. NSEs must develop and administer monthly testing products based on the monthly training requirements established by the NATCT. Monthly training tests must be administered without the use of reference material. Tests may be administered either on paper or through an electronic medium. (T-1)

14.3.1. Minimum passing score is 80% on all monthly training tests. Review training must be conducted when individuals score less than 100%. (T-1)

14.3.2. Document the review training and proficiency test score on AF Form 1098. (T-1)

14.3.3. Individuals scoring below 80% on the retest will be referred to the CCTLR for evaluation and training recommendations. Document recommendations and corrective actions on AF Form 623a or suitable substitute. Retain for 1 year. (T-1)

Chapter 15

AM PERSONNEL DUTIES AND RESPONSIBILITIES

15.1. AM Staff Personnel (Military, DoD Civilian, Contract). See AFI 13-204, Vol 1 for qualification, experience and professional development requirements.

15.1.1. Airfield Manager (AFM). The AFM is responsible for the overall management of AM facilities and services to provide a safe, efficient, and effective airfield environment for aircraft operations. Certain situations (e.g., exercises, nuclear weapons or aircraft movements, etc.) require the AFM to be designated as a trusted agent. **Note:** The AFM must not be assigned duties that could interfere with accomplishing their responsibilities outlined in this AFI. The AFM (military or DoD civilian) also provides direct supervision and management of all personnel working in AM. (T-1)

15.1.1.1. Military personnel must have completed all of the required AM Development Training requirements in AFI 13-204 Volume 1, Chapter 3 and the following in order to be qualified to assume the duty position. DoD and Contract civilian personnel refer to AFI 13-204 Volume 1. (T-1)

15.1.1.1.1. Airfield Manager Position Certification Guide (PCG).

15.1.1.1.2. Airfield Criteria, Airfield Inspection and Maintenance, Wildlife Hazard Management, Airfield Driving and AM Contingency Operations CBTs. **Note:** Completion of AM Contingency CBT is required for DoD Civilians that elect to deploy.

15.1.1.1.3. Advanced Airfield Manager Course.

15.1.1.1.3. **(AFGSC)** Completion of the Advanced Airfield Manager Course must be documented in civilian employee personnel file or military personnel training record. Coordinate with AFGSC/ A33S for requests to attend the course **(T-2).**

15.1.1.1.4. ORM Essential Application and Integration Course available for download at AF Safety Center Training Website **https://rmis.kirtland.af.mil/default.asp**.

15.1.1.1.5. Local Qualification Training (AF IMT 797, *Job Qualification Standard*).

15.1.1.2. Completion of the following courses are highly recommended for an AFM. See **Attachment 1** for a description of each course.

15.1.1.2.1. Airport Certification Procedures Course.

15.1.1.2.2. Aircraft Mishap Investigation Course (AMIC).

15.1.1.2.3. Military Airspace Management Course.

15.1.1.3. AFM Key Responsibilities.

15.1.1.3.1. Plan, organize and direct AM activities.

15.1.1.3.2. Manage the airfield environment to support base, tenant and transient flying operations according to Air Force, DoD, DoT, ICAO, North Atlantic Treaty Organization (NATO), FAA publications and host tenant agreements. (T-0)

15.1.1.3.3. Recommend qualified personnel to perform as the Deputy Airfield Manager (DAFM), NAMO, NAMT, Task Certifiers and Trainers or civilian equivalents for the AOF/CC to appoint in writing. The AFM may combine staff positions during personnel shortages.

15.1.1.3.4. Conduct airfield inspections and checks as outlined in Chapter 17. (T-1)

15.1.1.3.4.1. Ensure all required airfield signs, markings, lighting and aircraft arresting systems are available and properly installed according to the appropriate airfield planning and design criteria. (T-1)

15.1.1.3.4.2. Identify, document and report improperly installed airfield signs, markings, lighting and aircraft arresting systems to Civil Engineering (CE) for correction on AF Form 332, Base Civil Engineer Work Request or electronic equivalent. (T-1)

15.1.1.3.5. Develop an Airfield Inspection and Checks Operating Instruction (OI), Airfield Inspection Checklist, Airfield Diagram and Airfield Discrepancy Log (electronic equivalents are permissible) to establish procedures for inspecting the airfield for safety and compliance with airfield planning and design criteria. **Note:** The OI may be incorporated into a consolidated Airfield Management Operations OI. The OI must include the following: (T-2)

15.1.1.3.5.1. Procedures that identify who, when, where and how to conduct airfield inspections and checks. (T-1)

15.1.1.3.5.2. Procedures on how to document and track discrepancies on the Airfield Inspection Checklist/Diagram and Airfield Discrepancy Log or electronic equivalents. (T-2)

15.1.1.3.5.3. Procedures on required actions to close or restrict a portion of the airfield from aircraft movement in the event an unsafe condition is detected. (T-1)

15.1.1.3.5.4. Procedures to ensure closed, unsuitable or non-operational areas (e.g., runways, taxiways and aprons) are properly marked and published in the AOI and the FLIP. Publish a NOTAM to report conditions that will exist for less than 90 days. (T-1)

15.1.1.3.5.5. Procedures that clearly identify when additional airfield checks are required. (T-1)

15.1.1.3.5.6. Procedures on how to report discrepancies and/or hazards to appropriate agencies for prompt corrective action. (T-2)

15.1.1.3.5.7. Procedures and schedule to inspect each active USAF owned/operated landing auxiliary airfield as applicable. See Paragraphs 3.1.4.1. – 3.1.4.3. for additional information. (T-1)

15.1.1.3.6. Review airfield construction and repair project priorities for impact to airfield operations. (T-1) Use trend data collected from daily airfield inspections/checks and the Airfield Certification/Safety Inspection Report (See AFI

13-204 Vol 2) to support project funding at the Facility Board or Facility Working Group. (T-3)

15.1.1.3.7. Provide the OG/CC, OSS/CC and AOF/CC a recommended list of airfield construction and repair projects (include priority and justification) to brief at the Facilities Utilization Board (FUB) and Facility Working Group (FWG). (T-2)

15.1.1.3.8. Provide airfield tours and familiarization training to wing and group Commanders. Training is essential to wing senior leadership's understanding of airfield issues and responsibilities pertaining to Emergency Operations Center (EOC) Director, contingencies and deployments. (T-2)

15.1.1.3.9. Use a checklist, local form, NOTAM or electronic equivalent to notify as applicable, base/tenant/transient flying units, CE, SE, Control Tower, RAPCON or GCA facility, CP, FD, SF and Unit Airfield Driving Program Managers (ADPM) of conditions that may impact the airfield and/or flying operations. Examples include but are not limited to the following: (T-1)

15.1.1.3.9.1. Runway, apron or taxiway closures.

15.1.1.3.9.2. Parking spot closures.

15.1.1.3.9.3. Construction projects and/or repair activities.

15.1.1.3.9.4. Temporary obstructions.

15.1.1.3.9.5. Wing/Base or Unit level exercises.

15.1.1.3.9.6. After duty hour opening of the airfield.

15.1.1.3.9.7. Availability of airfield lighting or navigational aid systems.

15.1.1.3.10. DELETED

15.1.1.3.10.1. DELETED

15.1.1.3.10.2. DELETED

15.1.1.3.10.2.1. DELETED

15.1.1.3.10.2.2. DELETED

15.1.1.3.10.2.3. DELETED

15.1.1.3.10.3. DELETED

15.1.1.3.11. Develop and maintain a current Airfield Discrepancy Log or electronic equivalent to track the status of open discrepancies and/or hazards on the airfield (e.g., signs, markings, lighting, pavements, aircraft arresting system, obstructions, obstacles, etc.) until corrected. (T-2)

15.1.1.3.12. Develop a budget to support AM facilities and services. Submit a copy of the AM budget to the AOF/CC for inclusion into the flight annual budget. (T-3)

15.1.1.3.13. Develop an AOI and conduct a quarterly AOB when no USAF AOF officer and ATC function is assigned to the flight. (T-3)

15.1.1.3.14. Serves as a member of the Airfield Operations Board (AOB). Brief AM related agenda items outlined in Attachment 3, as required. (T-3)

15.1.1.3.15. Serve as a member of the wing airshow, open house, civil fly-in, or special event executive committees. Evaluate each activity plan to minimize and deconflict any impact to airfield operations before, during and after the event. (T-2)

15.1.1.3.16. Ensure AM has adequate staffing, equipment and facilities outlined in Chapter 16 to provide safe, efficient and effective AM services to the base and transient flying mission. Initiate corrective actions to include notification of the AOF/CC. (T-2)

15.1.1.3.17. Process airfield restrictions and closures as outlined in Chapter 21. (T-2)

15.1.1.3.18. Ensure NOTAMs are processed on conditions that meet NOTAM criteria in accordance with AFI 11-208, *Department of Defense Notice to Airmen (NOTAM) System*. Examples for reporting snow, ice, slush and water conditions can be found in AC 150/5200-28, *Notices to Airmen (NOTAMs) for Airport Operators*, and FAA JO 7930.2, *Notices to Airmen (NOTAMS)*. (T-1)

15.1.1.3.19. Ensure a CAUTION note is indicated in the Remarks section of the US Instrument Flight Rules (IFR) Enroute Supplement when runway edge lights are located more than 10 feet from the edge of the usable runway surface. (T-1) (Reference U.S. IFR Enroute Supplement, Section A)

15.1.1.3.20. Conduct a review with the Unit Deployment Manager and MAJCOM FAM at least quarterly to validate AM personnel eligible to deploy are postured correctly. (T-3)

15.1.1.3.21. Maintain a current copy of the Airfield Pavement Structural Evaluation, Runway Friction Characteristics Evaluation and Airfield Pavement Condition Survey reports on file in AM. (T-3)

15.1.1.3.21.1. Airfield Pavement Surveys and Reports. The Air Force Civil Engineer Center (AFCEC) Pavements Division has installation pavement reports for downloaded at: ttps://tyndall.eim.acc.af.mil/apps/afcec/Pavement%20Reports/default.aspx

15.1.1.3.21.2. Ensure runway weight bearing restrictions published in the FLIP are based on current pavement evaluation reports. (T-1)

15.1.1.3.22. Maintain a current copy of the rubber removal and painting plan on file in AM. (T-2) **Note:** When excessive rubber deposits build up on the runway, publish a NOTAM (if not already addressed in the DoD FLIPs) advising aircrews that a potential for reduced braking capability and/or directional control exist, particularly during wet RSC and include applicable airfield restrictions. (T-2)

15.1.1.3.23. Maintain a current copy of the aircraft arresting system annual certification on file in AM; may be maintained electronically. (T-3) When notified by CE that the effective pendant height has fallen to less than 38 millimeters (1.5 inches), issue a NOTAM to inform pilots of the reduced arresting system reliability. (T-1)

15.1.1.3.24. Process civil aircraft landing permits as outlined AFI 10-1001, *Civil Aircraft Landing Permit*. (T-2)

15.1.1.3.24.1. Maintain a file copy of the civil aircraft landing permit and supportive information in accordance with Air Force RDS, Table 10-9, Rule 1.00. (T-3)

15.1.1.3.24.2. Coordinate with base agencies for the determination, assessment, collection and disposition of appropriate civil aircraft landing, parking and storage fees. (T-2)

15.1.1.3.24.3. Ensure appropriate actions are accomplished in the event of an unauthorized civil aircraft landing. (T-2)

15.1.1.3.24.3. **(AFGSC)** Notify the AFGSC A33S Airfield Operations Workflow of unauthorized civil aircraft landings within 24 hours of incident **(T-2).**

15.1.1.3.25. Annually review wing, base and local policies and procedures that impact or affect airfield operations (e.g. LOAs, MOUs, Operations Plans (OPLANs), Host Tenant Support and Joint-Use Agreements). Submit completion of the review and recommended changes to the AOF/CC and OPR. Maintain a file copy of the recommended changes until source document is corrected. (T-3)

15.1.1.3.26. Nominate eligible personnel to the AOF/CC for the annual airfield operations award program outlined in AFI 36-2807. (T-3)

15.1.1.3.27. Recommend eligible personnel for skill-level upgrade and the award of SEI 154, 155 and 368 in writing (e.g., AF Form 623a entry). (T-2) (See AFECD)

15.1.1.3.28. Coordinate with SF and CE for placement of control area signs on the airfield. (See AFI 31-101, *Integrated Defense*) **Note:** Controlled and restricted area signs (where applicable) must meet airfield planning and design criteria siting, height and frangibility requirements. (T-1)

15.1.1.3.29. Serve as a member of the Air Traffic Control and Landing System (ATCALS) Review Board. (T-2)

15.1.1.3.30. Coordinate with the EOC on emergency situations or contingency operations that affect airfield operations. See AFI 10-2501, *Air Force Emergency Management (EM) Program Planning and Operations* for additional information. **Note:** During an aircraft mishap or incident involving the airfield/aircraft, the AFM's primary focus is on the airfield overseeing critical response/recovery operations. (T-2)

15.1.1.3.31. Coordinate with CE, SE, Aircraft Maintenance and Foreign Object Damage (FOD) Manager on the FOD Prevention Program and to ensure STOP bars, STOP signs and CHECK FOR FOD signs as required, are located on roads prior to entering flightline areas and vehicular roads that intersect runways, taxiways or aprons. (See UFC 3-260-01, *Airfield and Heliport Planning and Design*, AFI 21-101, *Aircraft and Equipment Maintenance Management*, and applicable Engineering Technical Letters (ETLs), ICAO, NATO or Standardized Agreement (STANAG) criteria) for additional information. (T-2)

15.1.1.3.32. Coordinate with CE and SE prior to the installation of stop signs on airfield service roads that lead to a CMA such as a runway, Vertical/Short Takeoff and Landing (V/STOL) Pad, Taxiway, Helipad, etc.. Where installed, the stop sign must read as follows "Do Not Proceed Contact ATC" (see FAA AC 150/5340-18, *Standards for Airport Sign Systems* for guidance). (T-2)

15.1.1.3.32.1. Collocate stop sign with the Stop Bar. (T-3) **Note:** Stop sign must also meet airfield planning and design criteria siting, height and frangibility requirements. (T-2)

15.1.1.3.32.2. Ensure stop sign does not interfere with aircraft (e.g. clearance requirements, jet blast, etc.) using the runways, taxiways and aprons. (T-1)

15.1.1.3.32.3. See FAA Advisory Circular, 150/5340-18 *Standards for Airport Sign Systems*, Figure 14. Examples of Standard Highway Signs.

15.1.1.3.33. Process airfield restrictions and closures in accordance with Chapter 21. (T-2)

15.1.1.3.34. Join the HQ AFFSA Airfield Operations SharePoint website. (T-3)

15.1.1.3.35. Bird/Wildlife Aircraft Strike Hazard (BASH) Management.

15.1.1.3.35.1. Serve as a member of the Bird Hazard Working Group (BHWG) and coordinate on the BASH/Wildlife Hazard Reduction Plan. (T-3)

15.1.1.3.35.2. Maintain a current copy of the installation BASH/Wildlife Hazard Reduction Plan on file in AM. (T-3)

15.1.1.3.35.3. Brief the BHWG on issues and trends relating to AM's role in the BASH/Wildlife Hazard Management Program. (T-3) Major areas of concern include, but are not limited to problems encountered with base agency support, funding issues, bird/wildlife trends identified during airfield inspections/checks and current FLIP entries regarding bird/wildlife cautions.

15.1.1.3.35.4. Ensure the following BASH information is published in FLIP: (T-1)

15.1.1.3.35.4.1. Restrictions to flight operations during each BWC.

15.1.1.3.35.4.2. Local or seasonal (Phase I and Phase II) BASH hazards.

15.1.1.3.35.4.3. BASH reporting procedures for auxiliary fields owned and/or operated by host flying wing.

15.1.1.3.35.5. Participate with SE in the completion of the BASH Self-Inspection Checklist outlined in AFPAM 91-212. Maintain documentation of completion for one year. (T-2)

15.1.1.3.35.6. Provide the capability to control bird/wildlife hazards (e.g., active/passive techniques) to support the Bird/Wildlife Hazard Reduction Plan. (T-2)

15.1.1.3.35.7. Ensure procedures are developed to identify and report Bird Watch Condition as outlined in the installation BASH/Wildlife Hazard Reduction Plan.

(T-2)

15.1.1.3.35.8. Ensure procedures are developed to report and disseminate the concentration of bird activities/movements on or near the airfield. (T-2)

15.1.1.3.35.8.1. Use NOTAMs for conditions that are temporary (less than 90 days) and DoD FLIPs for permanent. (T-1) Examples of temporary conditions are birds following grass mowers, birds in ponds after heavy rain, etc.). (T-1)

15.1.1.3.35.8.2. Information on bird concentrations and movements can be obtained from USAF Bird Avoidance Model (BAM) and Aviation Hazard Avoidance System (AHAS), local universities, state and federal wildlife agencies, and private organizations such as the National Audubon Society.

15.1.1.3.35.9. Refer to AFI 91-202, *The US Air Force Mishap Prevention Program* and AFPAM 91-212 for additional AM responsibilities.

15.1.1.3.36. Snow and Ice Control Management.

15.1.1.3.36.1. Serve as a member of the Snow and Ice Control Committee and coordinate on the Snow and Ice Control Plan. (T-2)

15.1.1.3.36.2. Maintain a current copy of the Snow and Ice Control Plan on file in AM. (T-3)

15.1.1.3.36.3. Determine and report RSCs and RCRs as outlined in Chapter 18. (T-1)

15.1.1.3.36.4. Ensure AM personnel monitor and coordinate snow removal operations to facilitate aircraft arrivals/departures as required. (T-1)

15.1.1.3.36.5. Coordinate with Barrier Maintenance and ATCALS Maintenance on procedures to remove snow around aircraft arresting systems and navigational aids. (T-1) **Note:** Snow removal operations in ILS area will be directed by AM. (T-1)

15.1.1.3.36.6. Coordinate with CE to control ice and remove snow from the airfield. (T-1) **Note:** Snow removed from the airfield must be placed at a safe distance to limit violations of airfield/airspace criteria and to eliminate the potential for snow berms that could interfere or impede aircraft operations on runways, taxiways, or aprons. (T-1)

15.1.1.3.36.7. Refer to AFI 32-1002, *Snow and Ice Control* for additional AM responsibilities.

15.1.1.3.37. Airfield and Airspace Waivers.

15.1.1.3.37.1. Coordinate on waiver requests that affect airfield and airspace criteria. (T-1) **Note:** Ensure airfield and airspace waivers are on file for violations to airfield planning and design criteria. (T-1)

15.1.1.3.37.2. Participate with CE and SE in the annual review of waivers (permanent and temporary) to airfield and airspace criteria. (T-1) TERPS, Weather, SF and ATCALS maintenance personnel are highly encouraged to

participate in the annual review of waivers and provide technical expertise on their airfield support facilities/equipment. (T-1)

15.1.1.3.37.3. Maintain a current copy of all MAJCOM approved airfield waivers and other airfield related waivers (e.g., temporary construction, signs, markings, lighting, weight bearing capacity, etc.) on file in AM. (T-2) **Note:** Ensure AM personnel that conduct airfield inspection/checks have access to all airfield waivers. (T-2)

15.1.1.3.37.4. Do not authorize an airfield construction project to start unless a temporary waiver has been approved by the installation commander. (T-2) Obtain a copy of the approved waiver from CE prior to the start of construction. (See UFC 3-260-01, Appendix B, Section 1 and Section 14) (T-2)

15.1.1.3.37.5. OG/CC approves weight bearing capacity waivers. Obtain a recommendation from CE prior to requesting approval from the OG/CC. (T-2)

15.1.1.3.37.6. Ensure non-standard airfield systems (e.g., signs, lighting, markings, arresting gear, etc.) have approved waivers on file before operational use. (T-1)

15.1.1.3.38. Airfield Construction, Repair and Maintenance.

15.1.1.3.38.1. Inspect airfield construction, repair and maintenance activities for safety and compliance. Coordinate on airfield construction plans and monitor airfield construction, repair and maintenance activities. (T-1)

15.1.1.3.38.2. Participate in airfield construction projects from the planning phase through project completion. (T-1)

15.1.1.3.38.3. Attend construction meetings. (T-2)

15.1.1.3.38.4. Develop a continuity book and/or file plan to track and monitor the following until completed or corrected: (T-2)

15.1.1.3.38.4.1. Active AF IMT 332s, or electronic equivalent.

15.1.1.3.38.4.2. Active temporary and permanent airfield related waivers.

15.1.1.3.38.4.3. Any information providing the status of airfield discrepancies, to include proposed fix actions and estimated completion date.

15.1.1.3.38.4.4. Airfield construction project plans and drawings.

15.1.1.3.38.4.5. Airfield construction meeting minutes.

15.1.1.3.38.5. Coordinate on all airfield construction projects that may impact airfield operations. (T-1) Develop procedures (normally in the AOI, construction contract and/or safety plan) to monitor and track contractors working on or near the airfield. (T-1)

15.1.1.3.38.6. Establish vehicle routes to and from airfield construction areas and procedures for site maintenance, daily cleanup, waste control, material and equipment storage. (T-2) Ensure contractors use the most direct route to minimize potential impact to aircraft operations. (T-2)

15.1.1.3.38.7. Develop procedures for contractor personnel to receive training on airfield driving and safety requirements before starting work. Ensure airfield construction contracts contain requirements for the contractor personnel to comply with these procedures. (T-1)

15.1.1.3.38.8. Participate in the final inspection of construction projects prior to accepting project completion. (T-1)

15.1.1.3.38.9. Review UFC 3-260-01, Appendix B, Section 14 or FAA Advisory Circular 150/5370-2, *Operational Safety on Airports During Construction*, as appropriate, prior to the start of any construction projects on the airfield for the minimum operational safety requirements. (T-2)

15.1.1.3.38.10. Ensure construction areas are marked and lighted in accordance with ETL 04-2. (T-1)

15.1.1.3.38.10.1. Construction areas must be properly marked, lighted and closed to aircraft/vehicles as required. (T-1)

15.1.1.3.38.10.2. Normal airfield lighting circuits located within closed construction areas must be turned off and barricades properly sited to prevent inadvertent access. (T-1)

15.1.1.3.38.11. Coordinate with CE, FD, SE, SF, TERPS, Aircraft Maintenance, operations community (e.g., Flying squadron(s), Scheduling, Standardization and Evaluation) and tenant flying units as applicable, to determine the impact of proposed airfield construction and repair projects on airfield security operations, ARFF capability, flying operations, etc. (T-2)

15.1.1.3.38.12. Review the FAA Form 7460-1, *Notice of Proposed Construction or Alteration* and FAA Form 7460-2, *Notice of Actual Construction or Alteration* prior to the start of construction. (T-3) (Does not apply to overseas locations not under the FAA authority.)

15.1.1.3.39. Aircraft Parking Plans and Special Operations Areas/Ramps.

15.1.1.3.39.1. Serve as the point of contact for development of aircraft parking plans. (T-2)

15.1.1.3.39.2. Maintain a current copy of aircraft parking plans (e.g., unclassified, classified) on file in AM. (T-2)

15.1.1.3.39.3. Annually review and coordinate on aircraft parking plans for compliance with airfield planning and design criteria in UFC 3-260-01, Air Force Handbook (AFH) 32-1084, Facility Requirements or applicable host nation criteria (e.g., ICAO, NATO, etc.). (T-2) Submit completion of the review and recommended changes to the AOF/CC and OPR for the aircraft parking plan. (T-3) Maintain a file copy of the recommended changes until source document is corrected. (T-3)

15.1.1.3.39.4. Coordinate with base support agencies such as CE, SF, SE, Aircraft Maintenance, Transient Alert (TA), Fuels Control and Wing Plans Office to develop aircraft parking plans for base assigned/transient aircraft and base

support plans. (T-2)

15.1.1.3.39.5. Coordinate with CE, CP, FD, SE, SF, TA, Maintenance Operations Coordination Center (MOCC) and Wing Plans Office to develop short-term aircraft parking plans for distinguished visitors, contingencies, exercises, static displays, airshows and other special airfield projects. (T-2)

15.1.1.3.39.6. Coordinate with CE, SE, TA, MOCC to designate areas for Engine Run-up, Drag Chute Jettison and Hot Pit Refueling. (T-2)

15.1.1.3.39.7. Coordinate with CE, SE, SF, TA, MOCC and flying units to designate areas for loading, unloading, arming and de-arming of aircraft with hazardous cargo and/or live armament (e.g., guns, missiles, bombs, etc.). (T-1)

15.1.1.3.39.7.1. Criteria to consider for designating these areas include but is not limited to security, safety of operations, airfield design to protect imaginary surfaces, apron lighting, water/fire hydrants, location of aircraft grounding points and access for ARFF personnel and equipment. (See UFC 3-260-01, AFJI 11-204, AFMAN 91-201, *Explosives Safety Standards*)

15.1.1.3.39.7.2. Maintain a current copy of the Explosive Safety Quantity Distance map on file in AM. (T-2)

15.1.1.3.40. AM Quality Assurance.

15.1.1.3.40.1. Conduct an annual self-assessment of AM functions and services using the applicable Self-Assessment Communicators (SACs) loaded into MICT. (T-2)

15.1.1.3.40.2. Review and compare MAJCOM crossfeeds, newsletters, HQ AFFSA/XA Trend and Analysis Reports, mishap investigation results, HQ AFFSA/XA and MAJCOM Digest articles, e-mail, etc.. Evaluate these items to determine local applicability and initiate corrective actions as required. (T-3)

15.1.1.3.40.3. Utilize the Management Internal Control Tool to download applicable SACs. (T-2)

15.1.1.3.41. Coordinate with Civil Engineers to: (T-2) 15.1.1.3.42. Coordinate with Safety on programs for: (T-2)

15.1.1.3.41.1. Establish a CE airfield maintenance team to perform required maintenance and repair activities and monitor pavement deterioration. Not applicable to AFRC bases.

15.1.1.3.41.2. Establish a runway rubber removal and painting plan that includes a recurring budget and schedule. **Note:** Paint and rubber removal is considered satisfactory when 85% of the rubber or paint is removed. (See ETL 97-17 *Guide Specification – Paint and Rubber Removal from Roadway and Airfield Pavements*, Section 6, Compliance Testing)

15.1.1.3.41.3. Conduct runway friction testing in accordance with ETL 04-10, Change 1 *Determining the Need for Runway Rubber Removal* and to remove built up rubber deposits when any of the following conditions exist or occur:

15.1.1.3.41.3.1. Runway markings (e.g., centerline, threshold, touchdown, etc.) are obscured due to rubber build-up.

15.1.1.3.41.3.2. Notified by CE that the runway friction value is less than the Action/Planning Levels in ETL 04-10, Change 1,Table 2.

15.1.1.3.41.3.3. Using ORM, the AFM, SE and OG/CC determine it is necessary due to potential or actual operational impact. Consider all factors when making the assessment such as pilot reported concerns, type of aircraft operations, etc.

15.1.1.3.41.4. Correct discrepancies and/or hazards involving airfield signs, markings, lighting, aircraft arresting systems and pavements. (Reference UFC 3-535-01, *Visual Air Navigation Facilities*, AFI 32-1041, *Airfield Pavement Evaluation Program*, AFI 32-1042, ETL 04-2, *Standard Airfield Pavement Marking Schemes*, AFI 32-1043, *Aircraft Arresting System* or applicable host-nation criteria (e.g., ICAO, NATO, etc.)

15.1.1.3.41.5. Develop a local operating procedure (LOP) for CE personnel to inspect and report airfield lighting systems reliability/outages to AM.

15.1.1.3.41.6. Maintain vegetation growth on or adjacent to the airfield (e.g., grass mowing, tree/brush trimming, etc.) according to AFI 91-202, AFPAM 91-212 and installation BASH/Wildlife Hazard Reduction Plan. These areas include but are not limited to overruns, drainage culverts/ditches, approach surfaces and areas around airfield lighting. **Note:** Vegetation waste should be removed from the airfield to reduce areas from becoming a bird/wildlife attractant.

15.1.1.3.41.7. Remove, top or otherwise control trees penetrating imaginary surfaces or those posing a hazard to safe airfield operations.

15.1.1.3.41.8. Provide accurate runway weight bearing restrictions.

15.1.1.3.41.9. Report the status and results of aircraft arresting systems inspections, maintenance and certifications to AM. (See AFI 32-1043)

15.1.1.3.41.10. Place frangible signs specifying the correct elevations near the takeoff end of the affected runway when runway end elevations differ by 25 feet from the published field elevations. (See AFMAN 11-217, Volume 1, *Instrument Flight Procedure*s and UFC 3-535-01)

15.1.1.3.41.11. Conduct annual Airfield Certification/Safety Inspections. (See UFC 3-260-01, Appendix B, Section 1, AFI 13-204 Vol 2)

15.1.1.3.42. Coordinate with Safety on programs for:

15.1.1.3.42.1. Bird/Wildlife Hazard Management. (See AFI 91-202 and AFPAM 91-212)

15.1.1.3.42.2. Designating parking, loading and servicing of aircraft with hazardous cargo or live armament handling (e.g., guns, missiles and bombs). (See AFJI 11-204, AFMAN 91-201)

15.1.1.3.42.3. Developing and applying OPLANs to respond to aircraft incidents

or accidents, in-flight emergencies (IFE) and similar disasters on or off base.

15.1.1.3.42.4. Determining Risk Assessment Codes (RAC) and applying ORM principles for hazardous airfield conditions.

15.1.1.3.42.5. Conducting annual Airfield Certification/Safety Inspections (See AFI 13-204, Vol 2, UFC 3-260-01, Appendix B, Section 1)

15.1.1.3.43. Coordinate with Wing Plans Office to ensure activities such as exercises, deployments, etc., are not planned or executed on the airfield without prior coordination with the AFM. (T-2)

15.1.2. DAFM or civilian equivalent. The DAFM, or civilian equivalent, assists the AFM in supervising flightline operations and airfield maintenance activities. In addition, the DAFM serves as the Wing ADPM.

15.1.2.1. Military personnel must have completed all of the required AM Development Training requirements in AFI 13-204 Volume 1, Chapter 3 and the following in order to be qualified to

15.1.2.1.1. Airfield Manager Position Certification Guide (PCG).

15.1.2.1.2. Airfield Criteria, Airfield Inspection and Maintenance, Wildlife Hazard Management, Airfield Driving and AM Contingency Operations CBTs. **Note:** Completion of AM Contingency CBT is required for DoD Civilians that elect to deploy.

15.1.2.1.3. Advanced Airfield Manager Course.

15.1.2.1.4. ORM Essentials for Leaders Course available for download at AF Safety Center Training Website.

15.1.2.1.5. Local Qualification Training (AF IMT 797, *Job Qualification Standard*).

15.1.2.2. Completion of the following courses are highly recommended for a DAFM. See **Attachment 1** for a description of each course.

15.1.2.2.1. Airport Certification Procedures Course.

15.1.2.2.2. Aircraft Mishap Investigation Course (AMIC).

15.1.2.2.3. Military Airspace Management Course.

15.1.2.3. DAFM Key Responsibilities.

15.1.2.3.1. Functions as AFM during their absence (e.g., leave, TDY, PME, transition between AFM due to PCS, etc.) or as otherwise needed. (T-2)

15.1.2.3.2. Supervises flightline operations and maintenance activities to ensure safe, efficient and effective airfield operations. (T-2)

15.1.2.3.3. Conduct airfield inspections and checks as outlined in Chapter 17. (T-2)

15.1.2.3.4. Attend meetings in support of special activities to include exercises, deployments, static displays, ceremonies and other events held on or near the airfield. (T-2)

15.1.2.3.5. Develop and manage the Airfield Driving Program. (T-2)

15.1.2.3.6. Develop procedures to determine and report RSC and RCR as outlined in Chapter 18. (T-2) Procure and maintain AF approved friction-measuring equipment and ensure it is calibrated IAW T.O. 33-1-23 or applicable manufacturer's guidance. (T-1)

15.1.2.3.7. Airfield Security and Hijack Prevention. (T-1)

15.1.2.3.7.1. Annually review and coordinate on the installation security and hijack prevention plan. (T-2) Submit completion of the review and recommended changes to the AFM, AOF/CC and OPR. (T-3) Maintain a file copy of the recommended changes until source document is corrected. (T-3)

15.1.2.3.7.2. Maintain a current copy of the installation security and hijack prevention plans on file in AM. (T-2)

15.1.2.3.7.3. See AFI 31-101, and AFI 13-207, *Preventing and Resisting Aircraft Piracy* (*Anti-Hijacking*) (FOUO) for additional AM responsibilities.

15.1.2.3.8. Maintain a locally developed airfield lighting chart or electronic equivalent identifying the number of lights associated with each lighting system (e.g., approach, runway, taxiway, obstruction, etc.) and the actions required to address outages. (T-2)

15.1.2.3.8.1. Consult with CE and use Attachment 11, *Airfield Lighting Chart* to determine if any identified outages within a particular lighting system render it unusable. (T-2) **Note:** Information of the Airfield Lighting Chart was extracted from the Military Handbook 1023/4, *Maintenance of Visual Air Navigation Facilities*, FAAO 6850.5, *Maintenance of Lighted Navigational Aids* and FAA AC 150/5340-26, *Maintenance of Airport Visual Aid Facilities* Appendix A.

15.1.2.3.8.2. To provide continuity of guidance, the allowable percentage of unserviceable lights must not be in a pattern that would alter the basic pattern of the lighting system.

15.1.2.3.8.2.1. An unserviceable light should not be adjacent to another unserviceable light except in a barrette or a crossbar where two adjacent unserviceable lights may be permitted.

15.1.2.3.8.2.2. Barrettes, crossbars and runway edge lights are considered to be adjacent if located consecutively and: Laterally - in the same barrette or crossbar; or longitudinally in the same row of the edge lights or barrettes.

15.1.2.3.8.3. Ensure NOTAMs are sent for airfield lighting outages as required. (T-1)

15.1.2.3.9. Process AF Form 332 for airfield discrepancies. (T-2) Track, monitor, and update status until work is complete. (T-2) **Note:** Procedures may be included in a LOP with the appropriate CE agency (Airfield Lighting, Barrier Maintenance, etc.) to use a locally developed log (or electronic equivalent) to track and monitor airfield discrepancies in lieu of AF Form 332.

15.1.2.3.10. Coordinate with CE to develop an airfield sweeping schedule/plan to support flying operations and maintain pavement areas on or next to runways,

taxiways, ramps, engine run-up pads, runway overruns, airfield access roads and helicopter landing areas on a regularly scheduled basis and as needed. (T-2) Ensure a current copy of the airfield sweeping schedule/plan is maintained in the Airfield Management Operations (AMOPS) section. (T-3)

15.1.2.3.11. Serve as a member of the FOD Prevention Committee. (T-3) (See AFI 21-101)

15.1.2.3.11.1. Ensure AM is included in the FOD discovery/reporting/investigation process. (T-3)

15.1.2.3.11.2. FOD walks on runways and taxiways (or as determined locally) must be prior coordinated with AM. (T-1)

15.1.2.3.12. Serve as a member of the Wing Inspection Team (WIT). (T-3) See AFI 10-2501, *Air Force Emergency Management (EM) Program Planning and Operations*.

15.1.2.3.13. Utilize the Management Internal Control Tool to download applicable SACs. (T-2)

15.1.3. NCOIC, Airfield Management Operations (NAMO) or civilian equivalent. The NAMO, or civilian equivalent, is responsible for establishing performance standards, procedures, and work priorities for personnel working in AMOPS section.

15.1.3.1. Military personnel must have completed all of the required AM Development Training requirements in AFI 13-204 Volume 1, Chapter 3 and the following in order to be qualified to assume the duty position. (T-1) DoD and Contract civilian personnel refer to AFI 13-204 Volume 1.

15.1.3.1.1. NCOIC, Airfield Management Operations (NAMO) and NCOIC, Airfield Management Training (NAMT)PCG.

15.1.3.1.2. Airfield Criteria, Airfield Inspection and Maintenance, Wildlife Hazard Management, Airfield Driving and AM Contingency Operations CBTs. **Note:** Completion of AM Contingency CBT is required for DoD Civilians that elect to deploy. (T-2)

15.1.3.1.3. ORM Essentials for Leaders Course available for download at AF Safety Center Training Website.

15.1.3.1.4. Local Qualification Training (AF IMT 797).

15.1.3.2. Completion of the Advanced Airfield Manager Course is highly recommended for a NAMO or civilian equivalent. See **Attachment 1** for a description of each course.

15.1.3.3. 13 Ensure a current and accurate on-base crash grid map and off-base (if applicable) are available in the primary and alternate AMOPS locations. (T-1) Instructions on how to read a crash grid map is located in AFPAM 10-100, Section 6. Obtain maps from the CE Readiness Flight. (See AFI 10-2501)

15.1.3.3.1. Review and initial flight plans, traffic logs, AF Forms 3616, NOTAMs and other supporting flight data information for accuracy, completeness and conformance with established directives. (T-2)

15.1.3.3.2. NOTAMs. Develop procedures to process NOTAMs in accordance to AFI 11-208. (T-2) **Note:** As a minimum, create Graphical NOTAMs to depict runway, taxiway and apron closures and restrictions on an airport map. (T-1)

15.1.3.3.2.1. Develop backup procedures such as a LOP with another base to transmit NOTAMs. (T-2)

15.1.3.3.2.2. Maintain a file copy of DD Form 2349, NOTAM Control Log or electronic equivalent in accordance with Air Force RDS, Table 11-5, Rule 4.00. (T-2)

15.1.3.3.2.3. Develop and maintain a NOTAM Continuity Binder to manage and track accountability of NOTAMs. As a minimum, include the following: (T-2)

15.1.3.3.2.3.1. NOTAM log for safety NOTAMS

15.1.3.3.2.3.2. NOTAM log for local NOTAMS

15.1.3.3.2.3.3. Active NOTAMS

15.1.3.3.2.3.4. Inactive NOTAMS (Not to exceed 15 days).

15.1.3.3.2.3.5. AFI 11-208 and other applicable guidance.

15.1.3.3.3. Ensure procedures in local weather support directive include notifying AMOPS section of hazardous weather. (T-2)

15.1.3.3.4. Secondary Crash Net (SCN). Ensure a SCN is installed and operational. (T-1) Develop primary and backup procedures for operation of the SCN. Use a SCN form or checklist (e.g., MAJCOM, locally developed or electronic equivalent) to record information (e.g., real-world/exercise) received over the PCAS and/or relayed over the SCN.

15.1.3.3.5. Conduct airfield inspections and checks as outlined in Chapter 17. (T-1)

15.1.3.3.6. Assign two-letter operating initials to each individual for use in daily operations. (T-3)

15.1.3.3.7. Develop a monthly duty schedule to ensure effective utilization of personnel working in the AMOPS section. (T-3)

15.1.3.3.8. Develop and maintain current and accurate OIs, Quick Reaction Checklists (QRC), logs, etc. in the AMOPS section to perform AM activities and responsibilities. (T-2)

15.1.3.3.8.1. QRCs must be maintained in stand-alone binder (or electronic equivalent), tabbed, readily available and clearly highlighted. (T-3)

15.1.3.3.8.2. OIs may be combined into a single Airfield Management Operations OI.

15.1.3.3.8.3. All AM personnel must review OIs and QRCs at least monthly. (T-3) Use a MFR, log or electronic equivalent to document reviews of OIs/QRCs and maintain a file copy in accordance with Air Force RDS, Table 13-06, Rule 4.00. (T-3)

15.1.3.3.8.4. The AFM and NAMO must conduct and document an annual

review all AM OIs, QRC, etc. to ensure accuracy, consistency, and compliance with current requirements and practices. (T-3)

15.1.3.3.8.5. As a minimum, maintain an OI or QRC on the following subjects: (T-2)

15.1.3.3.8.5.1. Inbound/outbound aircraft (e.g., MAJCOM/Local Flight Following Log, Flight Progress Strip or electronic equivalent).

15.1.3.3.8.5.2. Distinguished Visitors (DV) arrivals/departures.

15.1.3.3.8.5.3. Aircraft requiring special handling (e.g., Air Evacuation and Hazardous cargo).

15.1.3.3.8.5.4. Airfield restrictions (e.g., Prior Permission Required (PPR), Official Business Only (OBO), quiet hours, closures, etc.). (See **Chapter 21**)

15.1.3.3.8.5.5. Airfield Inspection and Checks.

15.1.3.3.8.5.6. FLIP Management.

15.1.3.3.8.5.7. Weather Warnings, Watches and Advisories.

15.1.3.3.8.5.8. In-Flight Emergency (IFE)/Ground Emergency (GE).

15.1.3.3.8.5.9. BASH/Wildlife responses and BWC declarations/notifications.

15.1.3.3.8.5.10. Broken Arrow (if applicable).

15.1.3.3.8.5.11. On/Off-base incident.

15.1.3.3.8.5.12. Anti-Hijacking.

15.1.3.3.8.5.13. Unauthorized Aircraft Landing.

15.1.3.3.8.5.14. Overdue Aircraft.

15.1.3.3.8.5.15. Hydrazine Incident.

15.1.3.3.8.5.16. Bomb Threat.

15.1.3.3.8.5.17. Hung Ordnance and Hot Armament.

15.1.3.3.8.5.18. Runway Incursion/Controlled Movement Area Violation (CMAV) events.

15.1.3.3.8.5.19. Pyramid Alert/Recall procedures.

15.1.3.3.8.5.20. Flight Safety and Local NOTAM procedures.

15.1.3.3.8.5.21. Customs/Agriculture/Immigration. Publish response agency, time and required notification action in the FLIP.

15.1.3.3.8.5.22. Facility/Building Evacuations.

15.1.3.3.8.5.22.1. Include procedures to take as a minimum, current OIs, QRCs, FLIPs for the local area, forms (AF, MAJCOM, local), equipment (hand held radio, laptop, etc.).

15.1.3.3.8.5.22.2. Review and update the Evacuation/Relocation Kit at least

quarterly.

15.1.3.3.8.5.22.3. As a minimum, notify the Control Tower, RAPCON or GCA facility, CP and FD of evacuation/arrival at alternate facility. **Note:** Notify agencies when AM returns to the primary facility.

15.1.3.3.8.5.23. Mishap Notification/Response. (See paragraph **4.6 Actions Following an Aircraft Mishap for additional information**)

15.1.3.3.8.5.24. Emergency Locator Transmitter (ELT).

15.1.3.3.8.5.25. Civil/Foreign Aircraft inbounds.

15.1.3.3.8.5.26. Training Program. (See **Chapter 19**)

15.1.3.3.8.5.27. UAS/RPA procedures (if applicable). (See paragraph 3.10.3 for additional information)

15.1.3.3.9. Develop a shift-briefing checklist or electronic equivalent. The shift-briefing checklist must include as a minimum: (T-2)

15.1.3.3.9.1. Airfield Status (e.g., Active Runway, Runway Surface Condition/Runway Condition Reading, current NOTAMs, Bird Watch Condition, Arresting Gear, etc.).

15.1.3.3.9.2. Airfield Construction.

15.1.3.3.9.3. Navigational Aids status.

15.1.3.3.9.4. Aircraft Rescue and Fire Fighting capability.

15.1.3.3.9.5. Equipment status (e.g., phones, UHF/VHF radios, vehicle, BASH, etc.).

15.1.3.3.9.6. Personnel working on the airfield (e.g., grass mowers, snow and ice removal operations, contractors, etc.).

15.1.3.3.10. Develop local procedures for using the AF Form 3616 to record significant incidents/events during each tour of duty. (T-2)

15.1.3.3.10.1. Entries may be handwritten, typed or computer generated.

15.1.3.3.10.2. Each AMOS/AMSL will sign the AF Form 3616 in the appropriate block at the end of his or her shift. (T-2) Their signature certifies the entries are correct and the form contains all required entries. First entry will state name and operating initials of individuals coming on duty. (T-3)

15.1.3.3.10.3. Annotate all actions on the events log. (T-2) Detailed documentation may be maintained on other forms or checklists. Units may specify items requiring documentation. As a minimum, the following items must be annotated on the AF Form 3616: (T-2)

15.1.3.3.10.3.1. Shift changes, opening and closing AMOPS section.

15.1.3.3.10.3.2. Personnel working on the airfield (e.g., grass cutters, contractor construction personnel, CE repair crews etc.) and coordination.

15.1.3.3.10.3.3. Issue, revision and cancellation of NOTAMs.

15.1.3.3.10.3.4. Airfield Inspections/Checks.

15.1.3.3.10.3.5. RSC/RCR.

15.1.3.3.10.3.6. BWC declarations.

15.1.3.3.10.3.7. IFEs/GEs to include aircraft arresting system engagements.

15.1.3.3.10.3.8. CMAVs.

15.1.3.3.10.3.9. PCAS/SCN tests and activations.

15.1.3.3.10.3.10. Active Runway changes.

15.1.3.3.10.3.11. Weather Warning, Watch and Advisories.

15.1.3.3.10.3.12. Closure of aerodrome, runways, taxiways and aprons.

15.1.3.3.10.3.13. NAVAID and airfield lighting outages.

15.1.3.3.10.3.14. Daily inspection of aircraft arresting and airfield lighting systems by CE.

15.1.3.3.10.3.15. Equipment malfunctions/outages (e.g., FAA flight planning system, back-up generator).

15.1.3.3.10.3.16. Reduced Aircraft Rescue and Fire fighting capability.

15.1.3.3.10.3.17. Daily flight planning room checks.

15.1.3.3.10.3.18. SOF calls.

15.1.3.3.10.3.19. Spot checks to enforce and monitor compliance with airfield driving procedures.

15.1.3.3.10.4. When using a computer to maintain a continuous log to cover an entire day, the AMOS/AMSL may sign on/off electronically.

15.1.3.3.10.4.1. AMOS/AMSL accepts responsibility for the facility by making an initial entry with the exact time and their operating initials in the remarks section. Anytime an AMOS/AMSL is relieved, enter the first name initial and last name and indicate transfer of responsibility of the shift on AF Form 3616 (e.g. 1310 T. SMITH OFF, TZ ON AS “AMOS”/”AMSL”). Entering the name of the relieved AMOS/AMSL serves the same purpose as signing the actual form. Second and third signature blocks are reserved for reviewing officials as outlined in paragraph 15.1.3.3.10.5. (T-2)

15.1.3.3.10.4.2. The AMOS/AMSL responsible for the shift, when the form is completed/finalized, must sign in the first block of the form. (T-2)

15.1.3.3.10.4.3. AMOS/AMSL make correct or re-accomplish entries before digitally signing or making a hard copy but must not change entries previous shift.

15.1.3.3.10.5. The AFM, and NAMO must review and sign daily logs for trends on the airfield or in AMOPS section (e.g., equipment outages, facility maintenance, etc.). (T-3)

15.1.3.3.10.6. Maintain the AF Form 3616 on file in accordance with Air Force RDS, Table 13-06, Rule 01.00. (T-2)

15.1.3.3.11. Develop flight plan processing procedures for the AOI (e.g., fax, e-mail, canned or telephone). (T-2)

15.1.3.3.11.1. All aircraft departing USAF installations must have a flight plan on file with the AMOPS section prior to takeoff. (T-0) **Exception:** Civil aircraft (e.g., Scheduled Air Carrier, General Aviation, etc.) are exempt from this requirement when published in the AOI.

15.1.3.3.11.2. Use a MAJCOM/Local Flight Following Log, Flight Progress Strip or electronic equivalent to record and track aircraft arrivals and departures. (T-2)

15.1.3.3.11.3. Use DD Form 175, DD Form 1801, or other authorized forms according to AFI 11-202 Volume 3, *General Flight Rule*s and DoD FLIP General Planning. (T-0)

15.1.3.3.11.4. Original flight plans may not be accepted via radio.

15.1.3.3.11.5. Locally filed flight plans can be amended via any means provided an original flight plan is on file at the departure AMOPS section.

15.1.3.3.11.6. An aircraft commander on a stopover flight plan or a weather/maintenance divert may re-file or amend their flight plan with an AMOPS section via any means (radio, telephone, etc.). **Note:** AMOPS personnel must verify an original flight plan clearance was filed by contacting the original departure location via telephone or sending a flight movement message query. (T-0)

15.1.3.3.11.7. An aircraft commander (normally operating on a VFR flight plan requesting to pick up an IFR flight plan) can request to air file a flight plan with the AMOPS section if the change does not penetrate an Air Defense Identification Zone (ADIZ). **Note:** AMOPS personnel must verify an original flight plan was on file. (T-0)

15.1.3.3.11.8. Flight plans must be filed in person and maintained on file in accordance with Air Force RDS, Table 13-07, Rule 3.00. (T-0) **Exception:** The AFM may authorize base and tenant flying units to fax, email, or electronically submit flight plans to the AMOPS section in LOA or AOI. The LOA or AOI must indicate who will maintain the original flight plan on file.

15.1.3.3.11.9. Flight plans may be processed by a MAJCOM Flight Planning Cell provided procedures (e.g., MAJCOM Concept of Operations (CONOPS), Directive or Supplement) outline the flight planning process, security requirements and AM notifications at departure and destination airfields. **Note:** MAJCOMs must coordinate procedures through HQ AFFSA/XA prior to implementation. (T-2)

15.1.3.3.11.9.1. Flight planning cells must ensure AMOPS sections and other DoD Base Operations/Flight Planning Facilities are notified of proposed flight plans departing and/or arriving their airfield. (T-1)

15.1.3.3.11.9.2. AM personnel will not modify/change flight plans for Flight Managed Missions without approval from the flight planning cell/flight managers. (T-1) (See AFI 11-255, Volume 3 *Integrated Flight Management Responsibilities and Procedures*)

15.1.3.3.11.10. At locations where more than one agency has the capability to file flight plans, the host wing AM function has overall responsibility for the following actions unless delineated otherwise in the AOI or LOA with the unit: (T-1)

15.1.3.3.11.10.1. Flight following/tracking aircraft.

15.1.3.3.11.10.2. Search and Rescue.

15.1.3.3.11.10.3. Aircraft security and anti-hijacking.

15.1.3.3.11.10.4. Amend, Cancel, and re-filing flight plans.

15.1.3.3.11.10.5. Producing traffic count data or other manpower activity associated with the flight plan filing process that may diminish or add manpower to the primary host unit.

15.1.3.3.12. Develop procedures to receive computer generated flight plans for transient aircrews as required. (T-1)

15.1.3.3.13. Ensure a current and accurate on-base crash grid map and off-base if applicable; is available in the primary and alternate AMOPS locations. Instructions on how to read a crash grid map is located in AFPAM 10-100, Section 6. Obtain maps from the CE Readiness Flight. (See AFI 10-2501)

15.1.3.3.14. Develop a customer quality feedback questionnaire or electronic equivalent to solicit customer feedback on the quality of AM services, airfield facilities (e.g., NAVAIDS, signage, markings, lighting, etc.) and aircrew support. (T-3) Maintain a file copy of the questionnaire in accordance with Air Force RDS, Table 33-42, Rule 04.00.

15.1.3.3.15. Develop procedures to ensure AM personnel do not release names of individuals allegedly involved in an aircraft incident or accident to agencies outside USAF channels. (T-2) All inquiries from non-mishap response personnel must be directed to Public Affairs. (T-2) (See AFI 13-204, AFI 91-204)

15.1.3.3.16. Establish the capability for transient aircrews to make long distance, commercial and DSN calls. (T-3)

15.1.3.3.17. Maintain current publications, charts, forms and FLIPs necessary to support base and transient flying operations. (T-1) Electronic media may be used for all items to include FLIPs. (See Attachment 1)

15.1.3.3.18. Include an entry in the FLIPs advising transient aircrews of the classified materials (Communication Security (COMSEC), cryptographic equipment, etc.) availability and storage restrictions. (T-3)

15.1.3.3.19. Appoint a primary and alternate FLIP manager to accomplish the following actions: (T-3)

15.1.3.3.19.1. Develop and maintain a FLIP Continuity Binder to manage and track accountability of FLIP products.

15.1.3.3.19.2. Order FLIPs and aeronautical charts for base units according to established distribution procedures. (See AFI 11-201, *Flight Information Publication*s, AFI 14-205, *Geospatial Information and Services* and *National Geospatial-Intelligence Agency (NGA) Catalog of Maps, Charts, and Related Products*).

15.1.3.3.19.2.1. If a new FLIP is not received by the effective date, mark material as "OUTDATED Contact AMOPS Section."

15.1.3.3.19.2.2. Electronic products on the NGA website may be used as a backup if new FLIPs are not received by the effective date.

15.1.3.3.19.2.3. Complete and return the Quality Feedback Card for each occurrence and retain a copy for your records.

15.1.3.3.19.3. Review local airfield data in each new FLIP edition for accuracy and consistency with information published in other FLIPs (e.g., approach plates, enroute supplement, area planning, etc.), base publications (e.g., AOI, OPLANs) and flight planning room displays.

15.1.3.3.19.3.1. Use a memo for record, log or electronic equivalent to document FLIP reviews. As a minimum, include the FLIP Title, Effective Date, Review Completion Date, Discrepancies Noted, Corrective Action, Date Corrected and Name/Rank of individual performing the review.

15.1.3.3.19.3.2. Maintain a file copy of FLIP reviews in accordance with Air Force RDS, Table 13-06, Rule 4.00.

15.1.3.3.19.4. Prepare and coordinate non-procedural FLIP changes with local agencies then submit the change in accordance with General Planning, Chapter 11. **Note:** The AFM is the approval authority for non-procedural FLIP change requests. Monitor and track non-procedural FLIP changes until corrected.

15.1.3.3.19.5. Initiate NOTAM action for non-procedural FLIP changes, as necessary.

15.1.3.3.19.6. When appropriate, include the type and extent of pavement in the touchdown zone (surface one) of the runway and in the rollout or middle zone of the runway (surface two) in the "Remarks" section of the Enroute Supplement. For example: "First 1,000 feet of runway 25 and first 2,150 feet of runway 07 is concrete. Middle 5,450 feet of runway 07/25 is a porous friction surface."

15.1.3.3.19.7. Publish non-standard airfield systems or configurations (e.g., signs, lighting, markings, arresting gear, etc.) in the FLIP and AOI.

15.1.3.3.19.8. Publish accurate pavement condition index and runway weight bearing restrictions in FLIPs based on current pavement evaluation reports.

15.1.3.3.19.9. Post changes to FLIP products. Post the change notice in accordance to FLIP product (e.g. enter the change notice identification aside of affected data and then file in front of document). **Note:** Annotate the operating

initials and date posted on each change notice.

15.1.3.3.19.10. Publish aircraft taxi and parking restrictions in the Area Planning (AP 1, 2, or 3) as applicable.

15.1.3.3.20. Obtain access to a Global Decision Support System 2 (GDSS2) account to review the airfield restriction data published in the AMC Airfield Suitability and Restrictions Report (ASRR) for currency and accuracy at least semiannually. ASRR is available for download at GDSS2. Submit completion of the review and recommended changes to the AFM, AOF/CC and Operations Group Standardization/Evaluation (OG/OGV) and the HQ AMC/A3AS Branch. Maintain a file copy of the changes until report is corrected. (T-2)

15.1.3.3.21. Develop procedures to check the Flight Planning Room for accuracy, currency and availability of materials (e.g., FLIPs, charts, forms, etc.) during each shift. Document each check on the AF Form 3616. (T-2)

15.1.3.3.22. Utilize the Management Internal Control Tool to download applicable SACs. (T-2)

15.1.3.3.23. Develop and maintain a current Read File (binder or electronic equivalent) for personnel working in the AMOPS section. The read file is used to keep AMOPS personnel informed on operational information such as HHQ policy/guidance, commander's policy letters, leave and duty schedules, training requirements, and miscellaneous items such as base activity flyers and fitness exercise schedules. (T-3)

15.1.3.3.24. Coordinate with the Fire Department to develop procedures for reporting the ARFF status to AM when it is reduced to a level that can no longer support an aircraft type (e.g., C-5, C- 17, KC-10) and/or the base/tenant flying mission. At a minimum, send a NOTAM stating the required restriction. Notify AOF/CC, CP, SOF (if available), control tower, RAPCON or GCA facility and document all actions on the AF Form 3616. (T-1)

15.1.4. NAMT or civilian equivalent. NAMT, or civilian equivalent, develops, implements, and manages the Airfield Management training program in accordance with **Chapter 19** of this instruction.

15.1.4.1. Military personnel must have completed all of the required AM Development Training requirements in AFI 13-204 Volume 1, Chapter 4 and the following in order to be qualified to assume the duty position. DoD and Contract civilian personnel refer to AFI 13-204 Volume 1. (T-1)

15.1.4.1.1. NCOIC, Airfield Management Operations (NAMO) and NCOIC, Airfield Management Training (NAMT) PCG.

15.1.4.1.2. Airfield Criteria, Airfield Inspection and Maintenance, Wildlife Hazard Management, Airfield Driving and AM Contingency Operations CBTs. **Note:** Completion of AM Contingency CBT is required for DoD Civilians that elect to deploy.

15.1.4.1.3. ORM Fundamentals Course available for download at AF Safety Center Training Website.

15.1.4.1.4. Local Qualification Training (AF IMT 797).

15.1.4.1.5. Formal Training/Task Certifier course.

15.1.4.1.6. Must be trained, certified and maintain proficiency on all subject matter required for training. (T-1)

15.1.4.1.7. Must be trained on Air Force Electronic Training Records (AFTR) system to effectively develop, administer and manage the AM training program. (T-2)

15.1.4.2. Completion of the Advanced Airfield Manager Course is highly recommended for a NAMT or civilian equivalent. See **Attachment 1** for a description of each course.

15.1.4.3. NAMT Key Responsibilities.

15.1.4.3.1. Develop, implement and manage a MTP in accordance with Chapter 19 of this instruction, AFI 36-2201, AFI 36-401, *Employee Training and Development*; AFMAN 36-2234. (T-2)

15.1.4.3.2. Conduct and document an annual review of the Training OI, Local PCG, Initial Evaluation Checklist and Newcomer Indoctrination Program. Submit completion of the review and recommended changes to the AFM and AOF. Maintain a file copy of the review and changes in AM Training Continuity Binder 1/TAB H until source documents are corrected. (T-2)

15.1.4.3.2.1. **(Added-AFGSC)** Brief and document results of annual AM training program reviews at the next scheduled TRB.

15.1.4.3.3. Ensure supervisors conduct and document initial training evaluations on newly assigned personnel within 60 days (120 days for Air Reserve Components) of assignment. (T-2)

15.1.4.3.4. Identify and forecast formal and supplemental training requirements. Coordinate scheduling through the appropriate channels, (e.g., AOF/CC, AFM, NAMO and Civilian Personnel Office). (T-2)

15.1.4.3.5. Ensure all applicable training requirements outlined in AFI 36-2201, CFETP and this AFI are documented in the individual's training records. (T-2)

15.1.4.3.6. Provide military personnel training status codes to UTM according to AFI 36-2201. Ensure codes accurately reflect personnel training status. (T-2)

15.1.4.3.7. Participate in AOF Training Review Board (TRB). Brief required agenda items according to Attachment 5. (T-3)

15.1.4.3.8. Maintain a current copy of trainers and task certifiers' appointment letter. (T-3)

15.1.4.3.9. Use Attachment 9 to conduct and document monthly training records inspections for accuracy, completeness and standardization. Units may add local requirements as required. Scan and upload the completed Attachment 9 in the User Files Section. For individuals with a paper training record, maintain the completed Attachment 9 in Tab F. Brief results of training record inspections at the TRB. Maintain documentation of monthly inspection results for at least 1 year in the Users Files Section or Tab F of the individual's training record. (T-3)

15.1.4.3.10. Ensure all personnel subject to mobility are trained and qualified to meet their deployment requirements. Document mobility training on AF Form 1098, *Special Task Certification and Recurring Training.* (N/A for AM Contract locations). For individuals with a paper training record, maintain the AF Form 1098 in Tab E. **Exception:** Mobility training requirements may be maintained electronically or in another location, e.g. unit deployment managers file system. Use the DD Form 2861, Cross-Reference or a MFR to identify location. (T- 2)

15.1.4.3.11. Attend unit OJT meetings to remain current on training policies and procedures as determined locally. (T-3)

15.1.4.3.12. Submit AF Form 2096, *Classification/On-The-Job Training Action*, IAW AFI 36- 2101 for required training actions (e.g. award of a skill-level and/or SEI). Scan and upload a copy of the signed AF Form 2096 into the User Files Section. For individuals with a paper training record, maintain a copy of the signed AF Form 2096 in Tab G. (T-3)

15.1.4.3.12.1. **(Added-AFGSC)** Scan and upload a copy of AF Form 2096 into the individual's electronic record in the AFTR User Files tab.

15.1.4.3.13. Ensure eligible personnel are awarded the SEI 368 within 90 days of completion of the mandatory prerequisites outlined in the AFECD. Obtain AFM approval in writing (AF Form 623a entry) prior to forwarding request for the award of SEI 368 to the UTM. Upon notification of approval, have individual ensure their personnel record is updated. (T-2)

15.1.4.3.13.1. **(Added-AFGSC)** Coordinate requests to schedule personnel to attend the Advanced Airfield Manager Course with the AFGSC A33S Airfield Operations Workflow. (**Note**: SEI 368 requires a minimum grade of Technical Sergeant, 36 months of experience in Airfield Management (12 of the 36 months must be working in AM as a 7-skill level), and completion of the Advanced Airfield Manager Course).

15.1.4.3.14. Qualification/Upgrade Training.

15.1.4.3.14.1. Ensure trainers use PCGs to conduct qualification/upgrade training. (T-2)

15.1.4.3.14.2. Ensure personnel start/complete position qualification training according to their skill level and position eligibility. Validate all required training items are properly documented and certified. (T-2)

15.1.4.3.14.3. Ensure personnel that complete all upgrade training requirements are approved in writing (AF Form 623a entry) by the supervisor and AFM prior to submitting the AF Form 2096 for upgrade to the UTM. (T-3)

15.1.4.3.14.4. Ensure eligible personnel are entered into and complete the appropriate skill-level upgrade and position certification guide training according to specified time limits. (T-1)

15.1.4.3.15. Trainers/Task Certifiers. Ensure trainers and task certifiers are appointed in writing, based on their qualifications and experience. (T-2)

15.1.4.3.15.1. Ensure trainers, as a minimum:

15.1.4.3.15.1.1. Have attended the AF Training Course. Document this training on the inside front cover of the individual's training records. For AFTR users, document this training in the AF Form 623 Part III (Formal Training) section. (T-2)

15.1.4.3.15.1.2. Are qualified and certified to perform the task to be trained. (T-2)

15.1.4.3.15.1.3. Are recommended by their supervisor. (T-3)

15.1.4.3.15.1.4. Are trained on the use of AFTR to effectively and accurately document AM training. (T-3)

15.1.4.3.15.2. Ensure task certifiers, as a minimum:

15.1.4.3.15.2.1. Are at least a SSgt with a 5-skill level or DoD civilian equivalent. (T-2)

15.1.4.3.15.2.2. Are someone other than the trainer.

15.1.4.3.15.2.3. Are qualified and certified to perform the task being certified. (T-2)

15.1.4.3.15.2.4. Have attended the AF Training Course. Document this training on the inside front cover of the individual's training records. For AFTR users, document this training in the AF Form 623 Part III (Formal Training) section. (T-2)

15.1.4.3.15.2.5. Are trained on the use of AFTR to effectively and accurately document AM task certifications. (T-3)

15.1.4.3.16. Ensure supervisors/trainers identify and document on an AF Form 623a, trainees who are not progressing satisfactorily as "Experiencing Difficulty In Training" and corrective actions to be taken. **Note:** For DoD civilian personnel experiencing difficulty in training, a Performance Improvement Plan (PIP) can be established. Contact CPF for guidance on developing a PIP. Supervisors should review guidance in PMD-13, Handbook for Measuring Employee Performance. (T-2)

15.1.4.3.16.1. Ensure weekly evaluations are conducted on personnel in EDIT status. **Note:** The trainee, supervisor/trainer, NAMT, AFM and AOF/CC must review and sign EDIT training evaluations. (T-2)

15.1.4.3.16.2. Ensure supervisor/trainer document on AF Form 623a when a trainee is no longer in EDIT status. (T-3)

15.1.4.3.17. Join the HQ AFFSA Airfield Operations SharePoint website to access current products (e.g., CBTs, PCGs, CFETP, etc.) and messages. (T-3)

15.1.4.3.18. Ensure supervisors and trainees are trained on the use of AFTR to effectively and accurately document AM training. (T-3)

15.1.4.3.19. Ensure all 1C7X1 and DoD AM civilian personnel obtain an AFTR account through ADLS. **Note:** Temporary hire civilian personnel will maintain paper training records. (T-3)

15.1.5. AM Quality Assurance Personnel (QAP) (AM contracted locations).

15.1.5.1. Military personnel must have completed all of the required AM Development Training requirements in AFI 13-204 Volume 1, **Chapter 4**, hold SEI 368 and the following in order to be qualified to assume the duty position. DoD civilian personnel must already possess a USAF Airfield Manager position certification or FAA equivalent certification and/or training credentials and have completed the following training requirements in order to be qualified to assume the duty position. (T-1)

15.1.5.2. Quality Assurance Program Coordinator Phase 1 and Phase 2 training outlined in AFI 63-124, *Performance-Based Service Acquisition (PBSA*).

15.1.5.2.1. Airfield Manager PCG.

15.1.5.2.2. Airfield Criteria, Airfield Inspection and Maintenance, Wildlife Hazard Management, Airfield Driving and AM Contingency Operations CBTs. **Note:** Completion of AM Contingency CBT is required for DoD Civilians that elect to deploy.

15.1.5.2.3. Advanced Airfield Manager Course.

15.1.5.3. AM QAP Key Responsibilities.

15.1.5.3.1. Works directly for AOF/CC. Serves as technical expert on AM duties and responsibilities. **Note:** QA personnel will not be assigned duties that conflict with primary duties.

15.1.5.3.2. Use a MAJCOM or HQ AFFSA/XA approved PWS or SOW to monitor, evaluate and certify contractor performance and compliance in accordance with AFI 63-138, *Acquisition of Services*. (T-2)

15.1.5.3.3. Evaluate and document contractor's performance in accordance with the Quality Assurance Surveillance Plan. (T-2)

15.1.5.3.4. Maintain surveillance documentation. (T-2)

15.1.5.3.5. Notify the Contracting Officer of any significant performance deficiencies. (T-2)

15.1.5.3.6. Recommend improvements to the PWS or SOW throughout the life of the contract. (T-2)

15.2. Airfield Management Operations Personnel (Military, DoD Civilian, Contract). See AFI 13-204, Vol 1 for qualification and experience requirements.

15.2.1. AM Operations Supervisor (AMOS)/AM Shift Lead.

15.2.1.1. Military personnel must hold AFSC 1C751, as a minimum. (T-1) **Note:** In accordance with AFI 36-2618, *The Enlisted Force Structure*, Airmen will not use "Supervisor" in the duty title unless they are at least a SrA, graduated ALS, and supervise the work of others. For Airmen that do not meet AFI 36-2618 requirements, use

"Airfield Management Shift Lead (AMSL)" as an interim duty title. For the purpose of this instruction, the duty title and responsibilities of the AMOS and AMSL are interchangeable for military personnel.

15.2.1.2. Military personnel must have completed the following in order to be qualified to assume the duty position. (T-1) DoD and Contract civilian personnel refer to AFI 13-204v1.

15.2.1.2.1. AM Shift Supervisor/Shift Lead and AM Operations Coordinator PCGs.

15.2.1.2.2. Airfield Criteria, Airfield Inspection and Maintenance, Wildlife Hazard Management, Airfield Driving and AM Contingency Operations CBTs. **Note:** Completion of AM Contingency CBT is required for DoD Civilians that elect to deploy.

15.2.1.2.3. Local Qualification Training (AF IMT 797).

15.2.1.2.4. Completion of the following courses are highly recommended for an AMOS/AMSL. See **Attachment 1** for a description of each course.

15.2.1.2.4.1. American Association of Airport Executives (AAAE) Basic Airport Safety and Operations Specialist School.

15.2.1.2.4.2. AAAE Advanced Airport Safety and Operations Specialist School.

15.2.1.3. AMOS/AMSL Key Responsibilities.

15.2.1.3.1. Maintains situational awareness of airfield activities and overall responsibility for AMOPS section while on duty. (T-2)

15.2.1.3.2. Serves as the AFM's representative during emergency response situations and during non-duty hours. (T-2)

15.2.1.3.3. Assesses airfield operations/situations, determines operational requirements and imposes airfield restrictions as needed (e.g., closing/suspending operations on aprons, taxiways and runways). (T-2)

15.2.1.3.4. Briefs AM personnel on emergency and operational activities. (T-2)

15.2.1.3.5. Conducts and documents a shift change briefing prior to signing off-duty. (T-2)

15.2.1.3.6. Conducts airfield inspections and checks. (T-2)

15.2.1.3.7. Performs Airfield Management Operations Coordinator duties as required to support airfield/flying operations. (T-2)

15.2.2. Airfield Management Operations Coordinator (AMOC) or civilian equivalent.

15.2.2.1. Military personnel must hold AFSC 1C731, as a minimum. (T-1)

15.2.2.2. Military personnel must have completed the following in order to be qualified to assume the duty position. (T-2) DoD and Contract civilian personnel refer to AFI 13-204v1.

15.2.2.2.1. AM Operations Coordinator PCG.

15.2.2.2.2. Airfield Criteria, Airfield Inspection and Maintenance, Wildlife Hazard Management, Airfield Driving and AM Contingency Operations CBTs. **Note:** Completion of AM Contingency CBT is required for DoD Civilians that elect to deploy.

15.2.2.2.3. Local Qualification Training (AF IMT 797).

15.2.2.2.4. Completion of the following courses are highly recommended for an AMOC or civilian equivalent. See **Attachment 1** for a description of each course.

15.2.2.2.4.1. AAAE Basic Airport Safety and Operations Specialist School.

15.2.2.2.4.2. AAAE Advanced Airport Safety and Operations Specialist School.

15.2.2.3. AMOC Key Responsibilities.

15.2.2.3.1. Monitors and coordinates airfield and aircraft activities. (T-2)

15.2.2.3.2. Conducts airfield checks. (T-2)

15.2.2.3.3. Processes flight plans and other air traffic related data through the national and international air traffic systems. (T-2)

15.2.2.3.4. Provides flight following services and initiate appropriate actions when aircraft are overdue. (T-2)

15.2.2.3.5. Maintain and process NOTAMs. (T-2)

15.2.2.3.6. Maintain a record of daily events on AF Form 3616. (T-2)

15.2.2.3.7. Executes OIs and QRCs necessary to perform AM duties and responds to situations requiring immediate action. (T-2)

15.2.2.3.8. Provide transient aircrew and aircraft support to include processing Prior Permission Required (PPR) requests; coordinating parking areas; receiving, storing and issuing classified material; and coordinating aircrew transportation. (T-2)

15.2.2.3.9. Provides briefings to base and transient aircrews on relevant airfield operations and restrictions. (T-2)

15.2.2.3.10. Maintains the flight planning room equipment, maps, displays and publications. (T-2)

Chapter 16

AM FACILITY STAFFING

16.1. Manpower requirements to support a wing/base level AM function are outlined in Capabilities-Based Manpower Standard.

16.2. Airfield Management Operations Section Staffing.

16.2.1. During airfield operating hours, at least two qualified AM personnel will be on duty to support flying operations and airfield activities (e.g., snow removal operations, RCR/RSC checks, airfield inspections, aircraft emergencies, BASH/Wildlife responses, etc.). At least one individual must be a qualified AMOS/AMSL or higher position qualification. The second individual must be a qualified AMOC or higher position qualification. **Exception:** Units at airports (normally shared- use) where AM does not have operational responsibility for the runway(s), are authorized to have one qualified AMOS/AMSL or higher position qualification on duty as workload permits. (T-1)

16.2.2. The AOF/CC is delegated the authority to waive the shift staffing requirement to one qualified AMOS/AMSL on duty during mid shifts, low flying periods or airfield quiet hours when all personnel authorized (funded positions) on the Unit Manning Document (UMD) are not duty position qualified and/or available for duty (e.g., TDY's, PME, PCS shortfalls, Deployments, Convalescent Leaves, Hospitalizations, etc.). AM staff personnel (e.g., NAMO, NAMT) can be used before approving a waiver. **Note:** Do not factor the AFM or DAFM in this waiver process.

16.2.2.1. Waivers to reduce staffing are a management tool for leadership to provide effective use of personnel during staffing shortages and must not be used to permanently reduce shift staffing requirements. (T-2)

16.2.2.2. The waiver request must be processed IAW Chapter 1. (T-3)

16.2.2.3. Include a risk assessment as a part of the waiver request. (See AFI 90-802, *Risk Management*) (T-2)

16.2.2.4. Include procedures in the waiver request to identify qualified personnel on telephone standby to recall for emergency situations or increased workload. (T-2)

16.2.2.5. Provide MAJCOM an information copy of the waiver. (T-3)

16.2.3. In observance of federal holidays and wing/base down days, the AOF/CC is delegated the authority to reduce shift staffing requirements to one qualified AMOS/AMSL or higher position qualification on duty in the facility. **Note:** Ensure telephone standby procedures are available in the AMOPS section to immediately recall qualified personnel for emergency situations or increased workload. The authority must not be delegated below the AOF/CC. (T-3)

16.2.4. Shift staffing waivers do not apply to contract and AFRC locations.

Chapter 17

AIRFIELD INSPECTIONS AND CHECKS

17.1. Airfield Inspection. Minimum requirement: one per day. Exception: An airfield check can be conducted in lieu of an inspection when AM is published closed and is called in from telephone standby to reopen the runway in support of in-flight/ground emergency or to launch/recover aircraft on an unscheduled mission. (T-1)

17.1.1. Each unit must use a MAJCOM or locally developed Airfield Inspection Checklist and Diagram or electronic equivalents to accomplish airfield inspections. (T-2)

17.1.2. Document and report all discrepancies and/or hazards identified during an airfield inspection to the appropriate agency for correction. (T-2)

17.1.3. Send NOTAMs for airfield discrepancies and/or hazards, as required. (T-1)

17.1.4. Maintain a file copy of the completed airfield inspection checklist and diagram or electronic equivalents in accordance with Air Force RDS, Table 33-46, Rule 31.00. (T-2)

17.1.5. All personnel performing an airfield inspection must be trained and certified in their training record. Additionally, individuals must have completed the Airfield Inspection and Maintenance, Airfield Criteria and Wildlife Hazard Management CBTs and have an operational understanding of the following: (T-1)

17.1.5.1. Obstacle clearance criteria and airfield waiver program. Must know distance requirements for obstacles (fixed/mobile) in relation to imaginary surfaces, runways, taxiways and parking aprons. (Reference UFC 3-260-01)

17.1.5.2. Standards for airfield signs and lighting systems. (Reference UFC 3-535-01)

17.1.5.3. Standards for Air Traffic Control and Landing Systems. (Reference UFC 3-260-01, AIM)

17.1.5.4. Aircraft restrictions (e.g., weight bearing, engine-run, wing-tip, taxi, etc.) published in FLIP, AOI and Airfield Pavement Report. (Reference AFI 32-1041, AFI 11-218, *Aircraft Operations and Movement on the Ground* and AOI)

17.1.5.5. Snow and ice control removal requirements to include priorities, berm heights and NAVAIDs.

17.1.5.6. Bird/Wildlife hazard management to include bird watch conditions, attractants, passive/active control measures, local species identification and surveys. (Reference AFI 91-202, AFPAM 91-212)

17.1.5.7. Standards for airfield markings. (Reference ETL 04-2, AFI 32-1042)

17.1.5.8. Standards for airfield pavement conditions, distresses and corrective actions. (ETL 02-19, ETL 04-9, *Pavement Engineering Assessment (EA) Standards)*

17.1.5.9. Standards for aircraft arresting systems. (AFI 32-1043, AC 150/5220-9, *Aircraft Arresting Systems for Joint/Military Airports*)

17.1.5.10. Airfield construction safety guidelines. (UFC 3-260-01, Appendix B, section 14.)

17.1.6. Airfield inspections are conducted by the AFM, DAFM, NAMO, NAMT, AMOS/AMSL or civilian equivalents to ensure a safe operational environment (e.g., airfield markings, signs, lighting, obstacle clearances, etc.) for aircraft operations. As a minimum, inspect the following items: (T-1)

17.1.6.1. **Obstacles and Obstructions.**

17.1.6.1.1. Inspect airfield for obstacles and obstructions that violate airfield imaginary surface criteria, such as construction activities (e.g., cranes, drilling rigs, etc.), tree growth, dirt/snow piles, and sand bag bunkers.

17.1.6.1.2. Inspect runway, taxiway and apron lateral clearance areas for violations (fixed or mobile).

17.1.6.2. **Construction Areas.**

17.1.6.2.1. Inspect construction areas to ensure that a high level of safety is maintained.

17.1.6.2.2. Construction Barricades. Ensure construction barricades are properly positioned to define the limits of construction and hazardous areas and, if barricades are lighted, check to ensure lights are working properly and are positioned correctly.

17.1.6.2.3. Stockpiled Materials. Ensure stockpiled material and construction materials are properly stored to keep them from being moved by wind, jet blast, or prop wash.

17.1.6.2.4. Inspect construction areas for confusing or missing signs, markings or lighting that could potentially confuse or mislead pilots or vehicle drivers on the airfield.

17.1.6.2.5. Equipment Parking. Determine if construction equipment (such as bulldozers, cranes, etc.) are marked and lighted and parked in designated areas.

17.1.6.2.6. FOD Debris. Ensure that debris and foreign objects are continuously being picked up around construction areas.

17.1.6.3. **Airfield Markings.**

17.1.6.3.1. Inspect airfield markings for peeling, chipping, fading and obscurity due to rubber buildup.

17.1.6.3.2. When markings are obscured/covered with rubber deposits, snow, etc., coordinate with Standardization and Evaluation, SE, AOF/CC and OG/CC to determine if markings are no longer adequate to support instrument procedures. Provide results to the TERPS Specialist and send a NOTAM.

17.1.6.4. **Airfield Signs.**

17.1.6.4.1. Inspect airfield signs for correct background and legend colors, easy to read, not obscured by vegetation, dirt or snow, frangible mounted and illuminated if required for night or Instrument Meteorological Conditions (IMC) operations.

17.1.6.4.2. Send a NOTAM when a mandatory sign (e.g., Runway Hold Sign, Instrument Hold Sign, etc.) has a discrepancy such as missing, incorrect legend, improperly sited or not illuminated when required for night or IMC operations.

17.1.6.5. **Airfield Lighting.**

17.1.6.5.1. Inspect airfield lighting systems to ensure they are frangible mounted and frangible devices are not more than 3 inches above the finished surface of the foundation. Drop-off at edge of foundations are to be flush with grade, but are allowed to erode to not more than a 3-inch drop-off before maintenance action is required.

17.1.6.5.2. Ensure lighting systems are not obscured.

17.1.6.6. **Pavement Areas.**

17.1.6.6.1. Inspect pavement areas for conditions that could cause ponding, obscure markings, attract wildlife or otherwise impair safe aircraft operations (e.g., scaling, spalling, cracks, holes, bumps, low spots, rubber deposits, vegetation growth, etc.).

17.1.6.6.2. Inspect pavement areas for loose aggregate or other foreign objects and contaminants. Ensure foreign objects and contaminants are removed promptly.

17.1.6.6.3. The Asphalt Surfaced Airfields Pavement Condition Index Manual can be used to determine the severity of pavement conditions and priority for repair.

17.1.6.7. **Aircraft Arresting Systems.**

17.1.6.7.1. Inspect aircraft arresting systems for obvious conditions that could compromise the system's operation (e.g., noticeably loose cable, improper doughnut spacing, broken rope ties, pavement erosion beneath the cable (effective pendant height), etc.). If an unsafe condition exists, notify CE or Fire Department, Command Post and ATC facilities. Suspend runway operations until condition is corrected. (See **Chapter 21** for additional information).

17.1.6.7.2. Ensure system is sited and installed according to AFI 32-1043 or AC 150/5220-9.

17.1.7. **Airfield Inspection Techniques.** A varied inspection pattern is preferred to avoid complacency and the possibility of missing items that are in need of correction. When conducting an inspection on a runway and time only permits one pass on the runway, individuals should drive towards the direction of landing aircraft to see approaching aircraft and improve visibility of vehicle to pilots. However, it is highly recommended for runway inspection be done in both directions.

17.2. Airfield Check. An airfield check is not a substitute for the required daily airfield inspection (except as noted in 17.1).

17.2.1. All personnel performing an airfield check must be certified in their training record. Additionally, personnel must have completed the Airfield Inspection and Maintenance, Airfield Criteria and Wildlife Hazard Management CBTs and have an operational understanding of items in paragraphs (17.1.5.1. - 17.1.5.10.). (T-1)

17.2.2. Use the MAJCOM or locally developed Airfield Inspection Checklist and Diagram or electronic equivalents to accomplish airfield checks. (T-2) **Note:** A separate checklist may be used to conduct and document the results of an airfield check. Regardless of the checklist used, maintain documentation in accordance with Air Force RDS, Table 33-46, Rule 31.00.

17.2.3. Document and report all discrepancies and/or hazards identified during an airfield check to the appropriate agencies for correction. (T-2)

17.2.4. Conduct and document an airfield check to examine the primary takeoff, landing and taxi surfaces in support of: (T-1)

17.2.4.1. IFEs/GEs. The AOI must clarify when local policy does not require a physical response by AM personnel to IFEs/GEs or if it is a "SOF's call". Document all "SOF calls" and IFE/GEs responses to the airfield on the AF Form 3616. (T-2)

17.2.4.2. RSC and RCR determination.

17.2.4.3. Wide body/heavy aircraft (e.g., B-52, B-747, C-17, C-5, KC-10, etc.) arrivals and departures as required by AOI.

17.2.4.4. NVD Operations. Prior to the start of NVD operations, conduct an airfield check of the designated NVD runway, taxi routes and IR lighting configuration. Document and report discrepancies immediately. As a minimum, notify the Control Tower, CP, AFM, AOF/CC and SOF if NVD operations must be suspended due to airfield safety hazards. (T-2)

17.2.4.5. Other events, such as unauthorized aircraft landings, severe weather, airfield driving violations, checks of construction areas, natural disaster (e.g., tornado, typhoon, earthquake etc.) to check for conditions that could affect safe airfield operations.

17.2.5. Conduct and document an airfield check before the start of wing flying activities each day and as required throughout the day to identify, document and report FOD/BASH/Habitat control, ponding, etc. for correction. (T-1) **Note:** Completion of the daily airfield inspection before the start of wing flying activities satisfies this requirement.

17.2.5.1. Documentation of BASH/wildlife responses must include BWC, time of activity, weather conditions, location of activity, species, estimated number of birds/animals and dispersal method used. (T-2)

17.2.6. Conduct and document a daily lighting serviceability and marking retro-reflectivity check preferable between sunset and sunrise or during hours of reduced visibility. (T-2)

17.2.6.1. Check the operation of airfield lighting systems, to include the different intensity levels (Steps 1-5), as applicable. (T-2)

17.2.6.2. Check the operation of lighting systems that protect Instrument Critical Areas and Traffic Control Light Systems at the intersection of runways and taxiways. (T-2)

17.2.6.3. Check the retro-reflective characteristics (reflect light back to the source) of runway and taxiway markings. (T-2)

17.2.6.4. CE airfield lighting personnel may perform the lighting check when AM is unable to gain access due to system location such as on water. Ensure these procedures are included in a LOP or incorporated in the AOI. (T-2)

17.3. Additional Airfield Inspections.

17.3.1. A monthly joint airfield inspection comprised of representatives from airfield management (AFM/DAFM), AOF/CC, TERPS, SE (flight and ground), (SOF (host/tenant), CE (waivers/pavements) and SF is highly recommended.

17.3.1. **(AFGSC)** Joint airfield inspections will be conducted at least quarterly **(T-2).**

17.3.2. Conduct and document an inspection with representatives from CE and SE, before and after completion of any airfield construction, changes or additions to the flying mission or changes affecting existing aircraft parking/taxi procedures. (T-2) Emphasis will be on "mission impact" of affected area(s) and necessary changes to the safety plan and the construction waiver. (T-2)

17.3.3. Conduct and document an annual Airfield Certification/Safety Inspection. See AFI 13-204 Volume 2. (T-2)

Chapter 18

DETERMINING AND REPORTING RUNWAY SURFACE CONDITION (RSC) AND RUNWAY CONDITION READING (RCR)

18.1. RSC and RCR procedures. Determine and report RSC and RCR, as required in this chapter and T.O. 33-1-23, when the airfield is open. (T-1)

18.1.1. Use AFTO Form 277, *Results of Runway Braking Test*, when reporting RCRs. Maintain a file copy of the completed form in accordance with Air Force RDS, Table 10-10, Rule 5.00. (T-2)

18.1.2. Airfields with little or no record of snow accumulation (based on the installation's climatology record) are not required to maintain friction measuring equipment (Decelerometers, Continuous Friction Measuring Equipment, etc.) when approved by MAJCOM/A3 (normally in a MAJCOM supplement). **Note:** AM personnel must report the predominant RSC and indicate no RCR available. (T-2)

18.1.3. RSC determination and reporting procedures may differ at joint or shared use airfields. **Note:** The AFM must ensure these procedures are outlined in the AOI. (T-2)

18.1.4. DELETED

18.2. Determining RSC and RCR. Estimate and report RSC to the nearest 1/10 of an inch according to T.O. 33-1-23. (T-1) **Note:** Pilots determine braking action for slush and wet runways from aircraft technical order data.

18.2.1. Wet Runway (WR). When water is the only form of visible moisture on 25% or more of the runway surface area (whether in isolated areas or not), report the RSC as "wet runway" and no RCR. (T-2) **Note:** Regardless of a Wet or Dry RSC, report the existence, location and depth of any standing water (ponding, water patches, puddles, etc.). Runways with historical drainage problems may require units to take more restrictive actions for reporting the RSC such as publishing restrictions or closures due to severe ponding, flooding and the potential for reduced braking action/hydroplaning.

18.2.1.1. Joint USAF/NASA tests have proven RCR measurements invalid where the only form of moisture affecting the runway is water.

18.2.1.2. The AFM or designated representative determines and reports RSC. (T-1)

18.2.1.3. Specify in the AOI when other agencies are delegated the responsibility to determine and report the RSC. Regardless who determines the RSC Wet, the runway must be reported Wet as outlined in 18.2.1. In addition, a physical check of the runway is required to determine RSC Dry. (T-2). Document all actions in the AF Form 3616.

18.2.2. Slush on Runway (SLR). When slush is on the runway and ice or snow is not present, report the RSC as "slush on runway". Do not report an RCR. (T-2)

18.2.2. **(AFGSC)** Kirtland AFB is not required to maintain a decelerometer nor report RCR's.

18.2.3. **Ice or Snow on Runway.**

18.2.3.1. For single type surface runway, determine the predominant RSC and the average RCR, when applicable, for the covered portions of the runway. (T-2)

18.2.3.2. When the runway surface consists of two pavement surfaces with significantly different friction characteristics, such as concrete and porous friction surfaces, determine the predominant RSC and RCR for the runway touchdown zones (surface one) and if applicable, for the middle or roll-out portion of the runway (surface two). (T-2)

18.2.3.3. The format used for transmission must clearly identify which runway portion has the high friction surface (HFS). For example, "PSR 12 HFS IR 08" identifies packed snow on runway, decelerometer reading 12 on touchdown portion, rollout portion is a high friction surface "HFS" with ice on runway, decelerometer reading 08. Provide two RSCs or RCR reports when the two types of runway surfaces have different runway cover. (T-2)

18.2.3.4. When using friction measuring equipment, round down if the reading is not a whole number (e.g., Reading 11.2, indicate 11; for 11.8, indicate 11). (T-2)

18.2.4. Water or Slush and Ice on Runway. When water or slush is present on an ice-covered runway, report the predominant RSC. (T-2) Determine the RCR or use the value 12, whichever is lower. (T-2)

18.2.5. Runway Partially Covered with Ice or Snow. When the runway is partially covered with ice or snow, determine: (T-2)

18.2.5.1. One RSC for those parts of the runway that are completely covered.

18.2.5.2. An RSC for the rest of the runway.

18.2.5.3. An average RCR that is representative of those parts of the runway that are completely covered with snow or ice.

18.2.6. Other Information. Identify and report other information essential to safe aircraft operations in clear text following the RSC and RCR data. Examples include but are not limited to the following: (T-2)

18.2.6.1. The extent or depth of any precipitation on the runway.

18.2.6.2. Location of precipitation on partially covered runways (e.g., touchdown area, rollout area, etc.).

18.2.6.3. Use remarks such as sanded, patchy Wet or patchy Dry in conjunction with RSC conditions SLR, Loose Snow on Runway (LSR), PSR, or IR. If possible identify the location of the patchy conditions.

18.2.6.4. DELETED

18.2.7. Determine and report ramp and taxiway surface and friction readings as required in the Snow and Ice Control Plan. (T-2)

18.2.8. **Anti-Lock Brake Systems (ABS).** See T.O. 33-1-23 for vehicles equipped with ABS.

18.3. Reporting Runway Conditions.

18.3.1. Disseminate RSC and RCR data to Control Tower, RAPCON or GCA facility, Weather and CP as a minimum. (T-2)

18.3.2. AFM determines if additional agencies should receive notification.

18.3.3. When requested, AM will provide Control Tower and RAPCON or GCA facility with ICAO braking action remarks (GOOD, FAIR, POOR and NIL) as outlined in the Flight Information Handbook or Enroute Supplement for each value reported. (T-2) **Note:** ICAO braking action reports are used by non-USAF aircraft. (T-1)

18.3.4. Send a NOTAM to report the surface condition (other than Dry) and/or friction reading for the following areas: (T-1)

18.3.4.1. Runway.

18.3.4.2. Taxiway and Ramp areas as required in Snow and Ice Control Plan.

18.3.4.3. Other information essential to safe operations. (See paragraph **18.2.6**)

18.3.5. When notified by the Snow Control Center that chemicals are being applied to airfield pavements (e.g., runway, taxiway, apron, etc.), as a minimum: (T-1)

18.3.5.1. Notify the Control Tower, RAPCON or GCA facility, MOCC, CP and TA.

18.3.5.2. Send a NOTAM (e.g., Chemicals applied on runway). Work with the Snow Control Center to determine when the chemical agent has dissolved enough to cancel NOTAM.

18.3.6. Send a Flight Advisory message and/or notify ARTCC as required to alert inbound aircraft of possible delays and/or poor braking action. (AFJMAN 11-213, FAAO JO 7110.10, *Flight Services*). (T-1)

18.4. Conducting RSC and RCR Checks.

18.4.1. When the RSC is reported as WR or SLR and the possibility of freezing conditions exist, RCR checks are required.

18.4.2. When the RCR is 12 or less, accomplish RCRs as frequently as normal flying operations allow and before each aircraft landing during low flying operations. (T-2)

18.4.3. During rapid changing conditions (e.g., increased snow fall, treatment of landing/taxiing surfaces, temperature changes, etc.) RSC and RCR checks must be conducted more frequently to ensure aircrews are provided with the most timely and accurate information. (T-2)

Chapter 19

AM TRAINING PROGRAM

19.1. Introduction. This chapter outlines specific requirements and responsibilities for all AM military and DoD civilian personnel. **Note:** The training program for contract locations will be developed and implemented according to the HQ AFFSA/XA or MAJCOM approved PWS or SOW. (T-1)

19.1.1. 1C7X1 and DoD AM civilian personnel will use AFTR located on the Air Force Advanced Distributed Learning System (ADLS). AFTR is the electronic equivalent of the hardcopy AF Form 623 and contains the most current CFETP and other OJT documentation. (T-2)

19.1.2. To access the AFTR program, each individual must register using the ADLS link: **ttps://golearn.csd.disa.mil/kc/main/kc_frame.asp?blnWhatsNew=True.** Click on the Training Records link and the AFTR logo at the top of the page. (T-2)

19.1.3. 1C7X1 and DoD AM civilian personnel training records will be maintained in AFTR and aligned under the Airfield Management Functional Community. All training documentation, including forms referenced in AFI 13-204v1 and 3, and AFI 36-2201 will be maintained using AFTR. These forms include AF Form 623a, AF Form 797, AF Form 1098, and AF Form 803, as well as the 1C7X1 CFETP. All other forms and supportive documentation will be scanned and uploaded as outlined in this AFI (e.g. AF Form 2096, 7-Level ADL Tracking Sheet, Training Certificates, etc.) (T-2)

19.2. Purpose. The purpose of the training program is to qualify personnel for position certification, skill-level advancement and ensuring proficiency to support peacetime operations and wartime readiness. The NAMT must ensure the AM training program includes the following as a minimum: (T-2)

19.2.1. Training Operating Instruction. Develop a training OI to establish local policy and procedures for implementing the training program. As a minimum, include the following: (T-2)

19.2.1.1. Responsibilities of personnel (AOF/CC, AFM, NAMO, NAMT, Supervisor/Trainer, Trainee and Task Certifier) involved in the training program.

19.2.1.2. Upgrade training requirements (military only).

19.2.1.3. Local qualification training requirements and time limits for completing local PCG (e.g., AF IMT 797/Local PCG).

19.2.1.4. Recurring training requirements.

19.2.1.5. Proficiency training and testing requirements.

19.2.1.6. Local training and certification requirements for individuals previously certified at another assignment.

19.2.1.7. DELETED

19.2.1.8. Other local or unique training requirements.

19.2.1.9. Professional development training.

19.2.1.10. Initial Evaluation Checklist.

19.2.2. Newcomer's Indoctrination Program. Develop and implement a Necomer's Indoctrination Programs as outlined in Attachment 8. (T-3)

19.2.3. Initial and Apprentice Course Graduate Evaluations.

19.2.3.1. Initial Evaluations. Develop a standardized checklist or form for supervisors to conduct and document an initial evaluation on newly assigned (PCS/PCA) personnel within 60 days (120 days for Air Reserve Components) of assignment. (T-3)

19.2.3.1.1. The initial evaluation must include a review/validation of the following to ensure the individual can meet duty position requirements: (T-3)

19.2.3.1.1.1. Current qualifications.

19.2.3.1.1.2. AFSC, duty position, core and deployment/UTC requirements.

19.2.3.1.1.3. Supervisor and trainee responsibilities as outlined in AFI 36-2101, 36-2201 and the CFETP.

19.2.3.1.1.4. DELETED

19.2.3.1.1.5. A review of Part I and II of the CFETP.

19.2.3.1.1.6. Formal/informal training requirements, such as skills, knowledge, or classroom instruction. Supervisors must evaluate technical school graduates on all tasks taught in the initial skills course as identified in the STS portion of the CFETP.

19.2.3.1.1.7. Other local or unique training requirements.

19.2.3.1.2. Initial Training Evaluations must be scanned and uploaded to the User Files Section. For personnel utilizing paper records, maintain a copy of the initial evaluation in Tab F of the individual's training record and retain until they PCS or PCA. (T-3)

19.2.3.2. Apprentice Course Graduate Evaluation. Develop a standardized checklist to evaluate apprentice course graduates during the first 90 days following assignment. See AFI 36-2201, for additional information. The NAMT, supervisor, or designated certifier will: (T-3)

19.2.3.2.1. Conduct and document task evaluations using the 1C7X1 CFETP STS 3-skill level course proficiency codes to ensure training effectiveness.

19.2.3.2.2. Document all task evaluations on the AF Form 803, *Report of Task Evaluations* and document in the 803 Section. For personnel utilizing paper records, maintain a copy in Tab D of the individual's training record. (T-3)

19.2.3.2.3. DELETED

19.2.3.2.4. DELETED

19.2.3.2.5. Participate in field interviews conducted by formal course OPRs.

19.2.3.3. Once qualification and upgrade training requirements are established for apprentice, and skilled personnel, use the appropriate PCG to conduct training. Document training on the 1C7X1 CFETP (STS) and AF Form 797. Refer to AFI 36-2201 and AFI 36-401 for additional information. (T-3)

19.2.4. Air Force Position Certification Guides (PCGs).

19.2.4.1. General. There are four published PCGs: *Airfield Manager (AFM); NCOIC, Airfield Management Operations (NAMO) and NCOIC, Airfield Management Training (NAMT), Airfield Management Operations Supervisor/Shift Lead (AMOS/AMSL)* and *Airfield Management Operations Coordinator (AMOC).* The AM PCGs are available through HQ AFFSA Airfield Operations SharePoint website.

19.2.4.2. Purpose. PCGs are developed by the 1C7X1 CFM, HQ AFFSA and MAJCOM Functional Area Managers to standardize AM duty position qualification training requirements.

19.2.4.3. Application. Use these documents, associated publications, AF Form 623a, and AF Form 797 to plan, conduct, and certify qualification training. **Note:** Refer to PCG for documentation requirements, when to complete, and time limits. (T-3)

19.2.4.3.1. Develop PCG lessons for local training items documented on the AF Form 797 or incorporate items into existing PCG lessons to meet local mission requirements and ensure 100% task coverage. (T-3)

19.2.4.3.2. When developing local items into PCG lessons, use the same format as the standardized AM PCGs (e.g. AFM PCG, AMOS/AMSL PCG, etc.). (T-3)

19.2.4.4. Implementation. AM enlisted personnel will complete PCGs as a part of qualification training. Once an individual completes a PCG, they are not required to re-accomplish it due to PCS or relocation to another duty station. Each PCG has a time limit for completion (not to include TDYs, deployments, leaves, hospitalizations, etc.). The AFM is delegated the authority to approve up to a 60-day extension for individuals in EDIT status. The AOF/CC is the approval authority for extension that exceeds 60 days. AM military personnel that fail to complete a PCG within 1 year must be considered for withdrawal from the AFSC. (T-3)

19.2.4.4.1. DELETED

19.2.4.4.2. DELETED

19.2.4.4.3. DELETED

19.2.4.4.4. DELETED

19.2.4.4.5. DELETED

19.2.5. Enlisted Upgrade Training. Conduct and document upgrade training according to AFI 36- 2201, 1C7X1 CFETP and AFI 13-204 Volume 1. (T-2)

19.2.6. Professional Development Training. Conduct and document professional development training as outlined in NCOIC, Airfield Management Operations (NAMO) and NCOIC, Airfield Management Training (NAMT) PCG. (T-3)

19.2.7. Proficiency Training. See 1C7X1 Career Field Education and Training Plan.

19.2.7.1. Locally developed tests will be formulated to a "go/no-go" or 80%/corrected to 100 % standard. (T-3)

19.2.7.2. Proficiency training must consist of all tasks and knowledge from all appropriate USAF, MAJCOM and local references essential to mission accomplishment. (T-3)

19.2.7.3. Document completion of proficiency training on an AF Form 1098 and maintain documentation for at least 1 year in the 1098 Section. **Note:** Export the current calendar year documentation and scan/upload into the User Files Section before beginning new documentation for a new calendar year. Personnel using paper records will document proficiency training in Tab E of the individual's training record and maintain for at least 1 year. (T-3)

19.2.8. Conduct recurring training on the following items at least annually and maintain documentation on an AF Form 1098 for current and previous calendar year in the 1098 Section. **Note:** Export the current calendar year documentation and scan/upload into the User Files Section before beginning new documentation for a new calendar year. Personnel using paper records will document proficiency training in Tab E of the individual's training record and maintain for at least 1 year. (T-3)

19.2.8.1. Bird/Wildlife Control. Use of active and passive dispersal methods in support of the Bird/Wildlife Hazard Reduction Plan (e.g., pyrotechnics, bioacoustics, grass height, removal of edge effects, etc.). Also, include a review of AM responsibilities outlined in the Bird/Wildlife Hazard Reduction Plan.

19.2.8.2. Snow and Ice Control (where applicable). Use of friction measuring equipment to determine RCRs. Include a review of AM responsibilities outlined in the Snow and Ice Control Plan. This training is normally performed in the fall before the snow season.

19.2.8.3. Generator start-up and power transfer as determine by local AO LOP/directive with CE.

19.2.8.4. Aircraft Arresting System operation/configuration (where applicable).

19.2.8.5. DELETED

19.2.8.6. AM Supplemental Training Products located on the AFFSA AM Operations, Procedures and Training CoP.

19.2.8.7. Use of NVDs during blackout procedures if applicable.

19.2.8.8. Emergency evacuation and alternate facility procedures.

19.2.8.8.1. **(Added-AFGSC)** Conduct and document a minimum of one in-house AM Ops exercise evacuation to the alternate facility per year. Maintain documentation of AM evacuation training exercises in the AM Training Binder II (TAB H). Training must ensure AM personnel are able to establish and provide AM/AMOPS services during an evacuation of the AM facility (T-2).

19.2.8.9. Include exposure and familiarity with In-Garrison Expeditionary Site Plan (IGESP). Reference AFI 10-404, *Base Support and Expeditionary Site Planning* (*Formerly Base Support Plan*)

19.2.8.10. Aircraft Characteristics and Performance for host and tenant assigned aircraft. At a minimum, this training will include a review of aircraft taxi restrictions, aircraft performance/design data (wingspan, tail height/growth, max take-off weight). **Note:** At locations where exercises and deployments involve non base assigned/transient aircraft, AM personnel must be trained on their characteristics prior to exercise/deployment date.

19.2.8.11. AFI 13-207, Preventing and Resisting Aircraft Piracy. Complete a review of the wing/base Hijack Prevention Plan.

19.2.9. Training Records.

19.2.9.1. Master Training Record. N/A for units using AFTR. Personnel using paper training records will develop a master training record according to AFI 36-2201, and AFI 36-401. Master training records must be setup and maintained in the following format: (T-3)

19.2.9.1.1. Tab A: Current 1C7X1 CFETP and published changes.

19.2.9.1.2. Tab B: All current AM PCGs to include Local PCG (Paper or Electronic copy).

19.2.9.1.3. Tab C: All master copies/template versions of AF IMT 797.

19.2.9.1.4. Tab D: All master copies/template versions of AF IMT 803, *Record of Task Evaluations* used to standardize documentation of Local PCG Evaluations, 1C7X1 CFETP STS Core Task Evaluations, Apprentice Course Graduates Evaluations.

19.2.9.1.5. Tab E: All master copies/template versions of the AF IMT 1098 used to standardize documentation of Proficiency Training, Mobility Training, Recurring Training.

19.2.9.1.6. Tab F: All master copies/template versions of AF IMT 623a, *On-The-Job Training Record Continuation Sheet* or automated version to standardize documentation of 5-Level UTG Progress, Upgrade/Qualification Monthly Evaluation, Training Record Inspection and Initial Evaluation.

19.2.9.1.7. Tab G: Miscellaneous documents (e.g., AF IMT 2096, *Classification/On-The-Job Training Action*, training certificates from formal/online and CBTs).

19.2.9.2. Individual training record. Develop and maintain a training record on all AM (military, DoD civilians, cross trainees, etc.) personnel.

19.2.9.2.1. All DoD Civilian Airfield Managers hired prior 1 Oct 02 and active duty SNCOs (MSgt through CMSgt) with a date of rank prior to 1 Oct 02 are exempt from maintaining the CFETP. All other documents will be maintained such as the AF Form 623, AF IMT 797 and AF IMT 1098 to document recurring, proficiency and local training.

19.2.9.2.2. Individual training records must be maintained on all personnel, reflect all formal courses attended, certifications awarded, qualification training completed. AFTR users will follow the format outlined in paragraphs 19.2.9.2.2.8. - 19.2.9.2.2.18. Non-AFTR users will follow the format in paragraphs 19.2.9.2.2.1. - 19.2.9.2.2.7. (T-3)

19.2.9.2.2.1. Tab A: Current 1C7X1 CFETP (Part II only) and published changes. **Note:** Circle only those tasks that pertain to the individual current duty position and/or skill level.

19.2.9.2.2.2. Tab B: A copy of the AM PCG for individuals in position or local qualification training. **Note:** For individuals not in position or local qualification training, an AF IMT 623a must be entered in Tab B stating the individual's current duty position.

19.2.9.2.2.3. Tab C: All AF IMT 797s used to conduct local qualification training. Circle only those tasks that pertain to the individual performing the task or duty.

19.2.9.2.2.4. Tab D: All AF IMT 803s, used to conduct and document local PCG Evaluations, 1C7X1 CFETP STS Core Task Evaluations, Apprentice Course Graduates Evaluations, etc.

19.2.9.2.2.5. Tab E: All AF IMT 1098s used to document proficiency training, mobility training, recurring training, etc.

19.2.9.2.2.6. Tab F: All AF IMT 623a, or automated version used to document 5-Level UTG progress, Answer Score Sheets), Upgrade/Qualification Monthly Evaluation Checklist, Training Record Inspection Checklist, Initial Evaluation Checklist/Form and Indoctrination Checklist.

19.2.9.2.2.7. Tab G: All completed AF IMT 2096s, AETC Form 156 or electronic equivalent, training certificates from formal/online and CBTs).

19.2.9.2.2.8. User Profile Section; used to record user information (e.g. work center, specialty, duty position, training status code, user access levels).

19.2.9.2.2.9. User Profile Section; used to identify current work centers.

19.2.9.2.2.10. 623 I Section; used to document individual name, grade and DAFSC or Civilian Job Series.

19.2.9.2.2.11. 623 II Section; N/A.

19.2.9.2.2.12. 623 III Section; used to document completion of formal training.

19.2.9.2.2.13. 623a Section; used to document, Upgrade/Qualification Monthly Evaluation Checklist, Training Record Inspection Checklist, Initial Evaluation Checklist/Form and Indoctrination Checklist.

19.2.9.2.2.14. 797 Section; used to conduct local qualification training and seven-level professional development.

19.2.9.2.2.15. 803 Section; used to conduct and document local PCG Evaluations, 1C7X1 CFETP STS Core Task Evaluations, etc..

19.2.9.2.2.16. 1098 Section; used to document proficiency training, mobility training, recurring training, etc..

19.2.9.2.2.17. JQS Section; used to identify training type.

19.2.9.2.2.18. User Files Section; used to scan and upload training certificates

from formal/online CBTs and other documents/forms placed in a record.

19.2.9.2.3. Individual training records may be maintained using an AF approved training database, 623 folder or a binder.

19.2.9.2.4. The AF IMT 623a will be used to document an individual's training progress. The supervisor and/or trainer and the trainee must sign and date all entries. As a minimum, document the following:

19.2.9.2.4.1. Milestones for 5-level UTG completion (identify the projected timeframe the trainee will complete all required volumes).

19.2.9.2.4.2. Task certification and recertification.

19.2.9.2.4.3. Training strengths, weaknesses, attitude and corrective action (if required).

19.2.9.2.4.4. Monthly evaluations on individuals in upgrade and local qualification training. As a minimum, include the percentage of training completed towards the overall training objective (eg. Upgrade, Local Qualification, etc.), inclusive dates of evaluation, current duty position, position start date, specific STS tasks covered during the evaluation period and other comments. Include all interruptions to training (stop training days, to include reason), trainee's comments, if necessary, and signature blocks for trainee, trainer, NAMT and AFM.

19.2.9.2.4.5. Maintain the AF IMT 623a as long as it pertains to the current training objective (i.e., award of the skill level or completion of qualification training).

19.2.9.2.4.6. Task progression.

19.2.9.2.4.7. Milestones for AF and Local PCGs completion (identify the projected timeframe the trainee will complete all required lesson plans).

19.2.10. Master Task Listing (MTL). The Duty Task List (DTL) will be used to identify duty position training requirements and serves as an equivalent to a MTL. These tasks include core, critical, position qualification, contingency or wartime and all other mandatory training requirements. **Exception:** Units using paper records will develop and maintain a MTL that identifies all tasks performed in the work center (e.g., Circled task on the CFETP STS Part II and local AF Form 797) and required for each duty position. (T-3)

19.2.11. Master Reference Index (MRI). Develop and maintain a local MRI. The MRI is a master listing of all mission essential documents necessary for AM. The listing contains the document number, title and date. The MRI is available on the AFFSA AM Operations, Procedures and Training CoP. References available electronically are hyperlinked to the source.

19.2.12. Task Evaluations. Evaluators will use the AF Form 803 to conduct and document completion of task evaluations during training SAVs, when directed by the commander, or when a task certification requires validation (normally occurs when/if someone needs to validate whether a member is certified and/or qualified on a task). (T-3)

19.2.13. NVD Training. At locations where AM personnel (military, DoD civilian) use NVDs, ensure personnel are trained on the proper use of NVDs according to AFJMAN 24-306, *Manual for the Wheeled Vehicle Driver*, **Chapter 23**, and US Army Training Circular TC 21-305-2, *Training Program for NVG Driving Operations*. Identify NVD tasks to include use of associated equipment on an AF IMT 797 with applicable training references (TR).

19.2.14. Training Continuity Binders. Maintain training program documentation in the following binder format:

19.2.14.1. BINDER 1 Contents.

19.2.14.1.1. Table of Contents.

19.2.14.1.2. TAB A – Appointment Letters (e.g. NAMT, Certifiers, Trainers).

19.2.14.1.3. TAB B – AM Training OI. (Paper or Electronic copy)

19.2.14.1.4. TAB C – AOF/Squadron/Wing Training OI as applicable. (Paper or Electronic copy)

19.2.14.1.5. TAB D – AFI 13-204, Volume 3. (Paper or Electronic copy)

19.2.14.1.6. TAB E – AFI 36-401. (When civilian employees are assigned) Use RESERVED when civilian employees are not assigned.

19.2.14.1.7. TAB F – AFI 36-2201. (Paper or Electronic copy)

19.2.14.1.8. TAB G – USAF, HQ AFFSA, MAJCOM and Base Training Messages.

19.2.14.1.9. TAB H – Annual Program Review.

19.2.14.1.10. TAB I – General Correspondence.

19.2.14.2. BINDER 2 Contents.

19.2.14.2.1. Table of Contents.

19.2.14.2.2. TAB A – Newcomer's Indoctrination Program.

19.2.14.2.3. TAB B – Master and Local Master Reference Index. (Paper or Electronic copy)

19.2.14.2.4. TAB C – Initial Evaluation Checklist.

19.2.14.2.5. TAB D – Apprentice Course Graduate Evaluation Checklist (as applicable). Use RESERVED when no military personnel assigned.

19.2.14.2.6. TAB E – Master copy of Computer Based Training CDs.

19.2.14.2.7. TAB F – Tests (e.g., Monthly Proficiency, Local Qualification Training, PCG Tests/Evaluations, etc.)

19.2.14.2.8. TAB G – Training Review Board Minutes. (Paper or Electronic copy)

19.2.15. Withdrawal/Disqualification from AM Duties. AM personnel whose AFSC is withdrawn for failing to meet mandatory skill qualifications, performing duties in an awarded AFSC, cannot maintain the skill according to AFI 36-2101, and has no other awarded skill will be considered disqualified. (T-1)

19.2.15.1. MAJCOM OPR for AM. Review and coordinate on requests for withdrawal from training, AFSC downgrade or withdrawal, and training requirement waivers. Refer to AFI 36-2101 and AFI 36-2201 for additional information. (T-1)

19.2.15.2. AM Supervisor/Trainer.

19.2.15.2.1. Identify and report personnel that demonstrate substandard performance in accordance with AFI 36-2201. (T-1)

19.2.15.2.2. Notify the AFM, AOF/CC and unit commander at the earliest possible time when individuals fail to make improvement based on supervisor/trainer feedback. (T-2)

19.2.15.2.3. Conduct a training progress review IAW AFI 36-2201 at the 24th month of UGT (36th month for ARC) for individuals who fail to complete UGT requirements. (T-2)

19.2.15.2.4. Consult AFI 36-2101, Chapter 4 for withdrawal process and package procedures. (T-2)

19.2.15.3. DoD Civilians or Contractors who fail to maintain training proficiency or who fail to complete training requirements outlined in this AFI/PWS, will be considered for employment termination. (T-1) When individuals fail to meet performance/training requirements after the probationary period, the supervisor must contact Civilian Personnel Office and/or the Contracting Office as applicable for available options to terminate employment. (T-1)

Chapter 20

AM FACILITIES AND EQUIPMENT

20.1. AM Facilities. AM Facilities are comprised of the Airfield Manager's office, AMOPS section, Flight Planning Room and Aircrew Lounge. Additional workspace may be required for staff personnel and to support other key AM programs such as airfield drivers classroom training, classified storage, BASH/Wildlife equipment/munitions storage, FLIPs/Navigational Services, etc.

20.1.1. Location. All facility requirements must be located in the same building (e.g., Base Operations or Airfield Operations Center) and within the immediate vicinity of the airfield. (T-2)

20.1.2. Hours of Operation. Publish airfield operating hours in the FLIP when less than 24 hours a day, 7 days a week. (T-3)

20.1.2.1. A normal shift should be 8 hours and must not exceed 12 hours (not including time for shift changes) without AOF/CC approval. (N/A for AFRC locations) (T-1)

20.1.3. **(Added-AFGSC)** Airfield hours will be IAW para **3.3** Notify the AFGSC A33S Airfield Operations Workflow of proposed changes to airfield operating hours.

20.2. Airfield Management Operations (AMOPS) Section. This section is primarily responsible for coordinating airfield activities that may affect flying operations such as airfield construction and repair projects, apron, taxiway and runway closures, quiet hours, and snow and ice removal. AMOPS section also provides flight-planning guidance to base and transient aircrews. The AMOPS section must contain the following: (T-2)

20.2.1. Telecommunications or computer equipment with the capability to process flight plan data and other flight movement messages. Develop backup procedures such as a LOA with another AMOPS section agency or DoD Base Operations/Flight Planning Facility to process flight plans and aircraft movement messages. (T-2)

20.2.2. Console Configuration. The console must be configured with suitable direct voice line communications to the Control Tower, RAPCON or GCA facility, ARTCC, Host and Tenant flying units, CP, FD, SF, TA, MOCC and additional administrative lines to make/receive DSN, local and long distance phone calls. (T-3) The console must also include the following: (T-2)

20.2.2.1. A recording device for communication between the AMOPS section and Control Tower, RAPCON or GCA facility, CP, FD, SF, Pilot-to-Dispatch/Ramp Net Radio, SCN and any telephone lines or radio frequencies on which flight plans can be filed, revised or cancelled.

20.2.2.1.1. Units may use telephone lines/radios recorded by other agencies to meet this requirement when a LOA is developed to grant the AFM, DAFM and NAMO access to tapes/recordings as needed. (T-3)

20.2.2.1.2. The LOA must include disposition procedures of tapes according to the AF Records Disposition Schedule in AFRIMS. (T-3)

20.2.2.2. Dual extensions of the PCAS. (T-3)

20.2.2.3. Secondary Crash Net (SCN). AMOPS section must have SCN activation capability with an additional extension to provide immediate access by other personnel on-duty, monitoring and training purposes. (T-2)

20.2.2.3.1. All agencies on the SCN will be on lines dedicated to the dissemination of emergency information that affects airfield or aircraft operations. (T-2)

20.2.2.3.2. The SCN may be a separate telephone or integrated into a multi-line call center.

20.2.2.3.3. The telephone must be equipped with a visual feature that activates as each two-way party on the SCN picks up the handset. (T-3)

20.2.2.3.4. All agencies on the SCN must use a noise reduction feature such as push-to-talk handsets or Confidencor (Trademark of National Communications Inc.) that filters out background noise. (T-3)

20.2.2.3.5. The SCN is limited to agencies requiring emergency action/response to aircraft incidents/mishaps. As a minimum, the SCN agencies include: (T-3)

20.2.2.3.5.1. Fire Department.

20.2.2.3.5.2. Weather.

20.2.2.3.5.3. CE Readiness.

20.2.2.3.5.4. Hospital/Medical Treatment Facility.

20.2.2.3.5.5. Command Post.

20.2.2.3.5.6. Civil Engineering.

20.2.2.3.5.7. Security Forces.

20.2.2.3.5.8. Maintenance Operations Control Center (MOCC).

20.2.2.3.6. Requests for additions/deletions (excluding those listed in paragraph 20.2.2.3.5.) to SCN must be coordinated through the AFM and forwarded to the OSS/CC for approval/disapproval. (T-3)

20.2.2.3.6.1. Determine talk back or listen only capability for approved additions as warranted in justification.

20.2.2.3.6.2. The total number allowed on the SCN must not exceed the capacity of the system or minimize signal strength and quality. (T-3)

20.2.2.3.7. Test the SCN daily and backup procedures at least quarterly. Document test results on the AF Form 3616. (T-3)

20.2.2.3.7. **(AFGSC)** Test the SCN backup procedures monthly. Document results on the AF Form 3616 **(T-2).**

20.2.2.3.8. Unless testing, only activate the SCN to relay emergency situations that are critical to the safety and security of airfield/flight operations. Emergency situations requiring activation of the SCN are as follows: (T-3)

20.2.2.3.8.1. Weather warnings.

20.2.2.3.8.2. IFEs.

20.2.2.3.8.3. GEs.

20.2.2.3.8.4. Force Protection Condition (FPCON) levels.

20.2.2.3.8.5. Disaster Response Force (DRF) activations/recalls.

20.2.2.3.8.6. Bomb threats or terrorist activities.

20.2.2.3.8.7. As requested by the EOC Director to support Comprehensive Emergency Management Plan (CEMP) outlined in AFI 10-2501. The installation CEMP 10-2 provides comprehensive guidance for emergency response to physical threats resulting from major accidents, natural disasters, conventional attacks, terrorist attack, and CBRN attacks.

20.2.2.3.9. AMOPS section is the primary activation authority of the SCN.

20.2.2.3.9.1. When mission requirements dictate, an additional SCN may be installed/activated by another agency provided a LOA exists between AM and the other agency.

20.2.2.3.9.2. Operating procedures will be clear, concise on whom the activation authority is, and when the SCN is used. (T-2)

20.2.2.3.9.3. Regardless of activation authority, the SCN will be operated and maintained in accordance with this AFI. (T-2)

20.2.3. An UHF radio transceiver for pilot-to-dispatch. **Note:** A VHF radio should be installed to support local requirements. (T-2)

20.2.4. A base station radio with additional hand-held land mobile radios to communicate with the following base support agencies, as required: (T-2)

20.2.4.1. CE Readiness and/or Disaster Response Force personnel.

20.2.4.2. Barrier Maintenance.

20.2.4.3. Airfield Lighting.

20.2.4.4. Airfield Sweeper.

20.2.4.5. Fire Department.

20.2.4.6. Snow Control Center.

20.2.4.7. Control Tower.

20.2.4.8. Transient Alert.

20.2.4.9. Operations Group Commander.

20.2.4.10. Airfield construction project manager as required.

20.2.4.11. Security Forces.

20.2.4.12. Aircraft Maintenance.

20.2.5. A personal computer with Internet capability, dual screen monitors and printer, to process DoD NOTAMs, access the ASRR, and electronic publication/form sites (e.g., DoD, AF, FAA, UFC, etc.). (T-3)

20.2.6. An auto-start generator to provide backup power for facility lighting and AMOPS section equipment, to include flight planning equipment, crash alarm system, radios, telephones, etc. (T-3)

20.2.7. An approved classified storage container or a LOP coordinated with the agency that will provide temporary storage of transient aircrew classified materials up to and including SECRET on file in AMOPS section. Command Post normally provides temporary storage of TOP SECRET material for transient aircrews. (T-1)

20.3. Flight Planning Room. (T-2)

20.3.1. The Flight Planning Room will be located near AMOPS section, but separated from other break/lounge or work areas. The location must be suitable for aircrew mission planning. The Flight Planning Room must have at least: (T-2)

20.3.1.1. Well lighted areas with suitable tables and chairs.

20.3.1.2. A personal computer, to include a printer with internet capability to access the DoD NOTAM System, AMC ASRR, and AF Electronic Publishing Products (e.g., Electronic Publications and Forms) websites as a minimum.

20.3.1.2.1. The personal computer may also contain Air Force/MAJCOM approved and certified mission planning software (e.g., Portable Flight Planning System).

20.3.1.2.2. DELETED

20.3.1.3. At least one telephone with DSN and off-base dialing capability.

20.3.1.4. Flight Planning Room Displays. Flight planning room diagrams and charts must be of sufficient size and scale to support aircrew flight/mission planning. Diagrams must be accurate, current and include OPR and currency date. As a minimum, display the following: (T-2)

20.3.1.4.1. A large-scale airfield diagram or electronic equivalent depicting as a minimum:

20.3.1.4.1.1. Runways and gradients. (Include runway length, width and overrun)

20.3.1.4.1.2. Taxiways with designations.

20.3.1.4.1.3. Aircraft parking apron with designations.

20.3.1.4.1.4. Arming and de-arming, hot brake and hydrazine areas.

20.3.1.4.1.5. Aircraft arresting systems (types/location).

20.3.1.4.1.6. Hazardous cargo loading/unloading areas.

20.3.1.4.1.7. Location and description of Visual Flight Rules (VFR) and Instrument "INST" hold position signs and markings.

20.3.1.4.1.8. Inertial Navigation System (INS) checkpoint coordinates for aircraft parking spots, engine run-up areas, and taxiway/apron holding positions as

required by assigned aircraft. INS Checkpoints may be displayed separately.

20.3.1.4.1.9. Location of Airfield Management (normally inside the Base Operations Bldg), Control Tower, Fire Department, and Transient Alert.

20.3.1.4.1.10. Other information needed for the safe and expeditious handling of aircraft.

20.3.1.4.1.11. Display runway distances from appropriate taxiways to runway ends at those airfields where intersection departures are permitted. **Note:** The large-scale diagram information can be depicted on more than one diagram or electronic equivalent provided all required items are displayed.

20.3.1.4.1.12. Include a legend to illustrate symbols used.

20.3.1.4.2. A chart, map or computer generated illustration developed in collaboration with SE that depicts local bird/wildlife hazards on the airfield and surrounding areas.

20.3.1.4.3. Current publications, charts and forms to support aircrew flight/mission planning. (See **Attachment 1**)

20.3.1.4.4. Display the forms below prominently. **Note:** Forms may be maintained electronically when a message is prominently displayed identifying the location and availability. (T-3)

20.3.1.4.4.1. AF IMT 651, *Hazardous Air Traffic Report* (HATR).

20.3.1.4.4.2. AF IMT 457, *USAF Hazard Report*.

20.3.1.4.4.3. DoD FLIP Revision Report.

20.3.1.4.4.4. Customer Quality Feedback Questionnaire or electronic equivalent.

20.3.1.4.4.5. AF IMT 853, *Air Force Wildlife Strike Report.*

20.4. Airfield Status Display. As a minimum, prominently display the following information in the AMOPS section and/or flight planning room. **Note:** Airfield status displays must show current information and date/time (Zulu) last updated. (T-3)

20.4.1. Active runway(s).

20.4.2. BWC.

20.4.3. RSC/RCR.

20.4.4. Airfield construction areas/status and any revised taxi routes/restrictions.

20.5. Aircrew Lounge. Furnish and equip the aircrew lounge with a telephone (DSN, off-base dialing capability) and comfortable seating for aircrews awaiting aircraft servicing or departure. (T-3)

20.6. Emergency Response Vehicle (N/A at AFRC ramp only locations). (T-3)

20.6.1. AM must be equipped with a 4x4 emergency response vehicle(s) to allow for year-round (snow/rain) inspection and response to in-field and perimeter areas. The vehicle must be dedicated to AM for airfield responses such as IFEs/GEs, aircraft mishaps, airfield inspections/checks, airfield construction and BASH responses. (T-3) The vehicle must be

capable of carrying additional passengers for monthly inspections, waiver reviews, etc. (e.g., SUV, suburban, 4-door pickup). (T-3)

20.6.1.1. Vehicle(s) must be marked and lighted as specified in T.O. 36-1-191, Technical and Managerial Reference for Motor Vehicle Maintenance. (T-1)

20.6.1.2. Vehicle(s) must be equipped with a base station radio and/or a tunable multi-channel UHF/VHF radio to conduct two-way communications with other agencies (e.g., CE Readiness response forces, airfield lighting, barrier maintenance, control tower, transient alert, etc.) and monitor aircraft operations such as in-flight/ground emergencies. (T-3)

20.6.2. Additional vehicle(s) are highly recommended to support special events (e.g., Airshow, Open House, Civil Fly-In, etc.), multiple runway operations, snow removal operations, auxiliary airfields inspections/checks and joint inspections.

20.6.3. Vehicles that are used to conduct airfield friction tests must meet the minimum requirements outlined in T.O. 33-1-23. (T-1)

20.7. Night Vision Devices (NVDs).

20.7.1. NVDs may be used by AM to aid in conducting airfield inspections/checks and airfield surveillance during periods of reduced airfield lighting configurations.

20.7.2. NVDs used for AM purposes must be at least Generation III type and must be affixed to a head strap (i.e. AN/PVS-7/D). (T-3)

20.7.3. When NVDs are used by AM personnel, training on proper use must be conducted and documented. (T-1)

20.8. AM Alternate Facility Equipment.

20.8.1. Designate an alternate facility to provide AM services in the event of an evacuation. (T-3)

20.8.2. Maintain an evacuation kit. Include office supplies (e.g., paper, pencils, binders, etc.) (T- 3)

20.8.3. A fax machine is highly recommended as an alternate method for receiving/filing flight plans.

20.8.4. Administrative lines to make/receive DSN, local and long distance calls.

20.8.5. Cellular Telephone. A government cellular telephone to communicate with AM Operations and base support agencies is highly recommended.

20.8.6. The capability to file flight plans, process and track inbound/outbound flight movement messages with ARTCC, FSS or other flight planning facilities.

Chapter 21

AIRFIELD RESTRICTIONS AND CLOSURE PROCEDURES.

21.1. Airfield Restrictions. At USAF bases, joint or shared use airfields, overseas bases and associated airfields where AM is operated by the USAF, AM has the authority to impose the following operational airfield restrictions. **Note:** These procedures must be clearly defined in the AOI as appropriate. (T-1)

21.1.1. Close, suspend, and resume airfield, runway or taxiway operations.

21.1.2. Temporarily suspend or close runway operations when any unsafe condition affects runway operations (e.g., FOD, severe bird/wildlife activity, snow and ice removal checks, arresting systems maintenance/configuration changes, airfield construction, pavement repair, etc.).

21.1.3. Temporarily close an airfield to all traffic during hazardous weather such as tornadoes, hurricanes or typhoons.

21.1.4. Limit operations to specific types of aircraft. **Note:** Airfield restrictions establishing limitations on the number or type of aircraft using an airfield will be coordinated with MAJCOM, host nation (as applicable), Wing/CC, OG/CC, AOF/CC and CP.

21.1.5. Limit transient aircraft traffic to Official Business Only (OBO) and/or Prior Permission Required (PPR). **Exception:** Aircraft carrying a Distinguish Visitor Code 6 or higher or aircraft experiencing an emergency. Aircrew may use OBO/PPR facilities as an alternate for IFR flights when a landing at the intended destination becomes inadvisable. Aero medical Evacuation (AIREVAC) or Special Air Missions (SAM) are also exempt from OBO/PPR restrictions, but are required to obtain a PPR number for tracking and notification.

21.1.6. Restrict use of an airfield due to classified operations when normal activity would compromise security.

21.1.7. Restrict use of an airfield when facilities and services are reduced or lack sufficient resources (e.g., for limited transient services, limited apron parking space, major construction, reduced aircraft rescue and fire fighting capability, etc.).

21.1.8. Prohibit low approaches, restricted low approaches and practice landings when airfield activities (e.g., construction, snow and ice removal operations, grass cutting activities, etc.) are in the vicinity of or on the runway. **Note:** Coordinate these types of restrictions with the OG/CC through the AOF/CC and notify Wing and tenant flying units.

21.1.9. Restrict use of an airfield during NVD or blacked-out airfield operations to reduce the potential of normal activity compromising safety.

21.2. AM Procedures. AM must notify appropriate (e.g. ATC, CP, etc.) agencies and take the following actions: (T-1)

21.2.1. Conduct a runway check and report the status prior to resuming normal operations.

21.2.2. Provide a time runway operations are expected to resume following the announcement of a suspension/closure. **Note 1.** A runway suspension is normally short in duration (e.g., in-flight/ground aircraft recovery operations, FOD removal, dispersal of

severe bird/wildlife activity, aircraft arresting system reconfiguration, etc.). **Note 2**. A runway closure is normally for an extended period (e.g., snow and ice removal operations, construction/repair activities, aircraft mishap, etc.).

21.2.3. Ensure tenant unit participation in preplanning meetings concerning airfield restrictions and closures.

21.2.4. Inform MAJCOM at least 96 hours prior to the effective date for wider dissemination. Notify MAJCOM as soon as possible of unexpected (no-notice) restrictions.

21.3. Prescribed and Adopted Forms.

21.3.1. **Prescribed Forms.** AF IMT 3615, *Required Data for Performing PAR Alignments*

AF IMT 3616, *Daily Record of Facility Operations*

AF IMT 3622, *Air Traffic Control/Weather Certification and Rating Record*

AF IMT 3623, *Daily Traffic Count*

AF IMT 3624, *Equipment Outage Log*

AF IMT 3626, *Position Log*

AF IMT 4058**,** *Airfield Operations Policy Waiver*

21.3.2. **Adopted Forms:** AETC Form 156**,** *Student Record of Training*

AF IMT 457, *USAF Hazard Report*
AF Form 623**,** *Individual Training Record Folder*
AF IMT 332, *Base Civil Engineer Work Request*
AF IMT 623a, *On-The-Job Training Record - Continuation Sheet*
AF IMT 651, *Hazardous Air Traffic Report* (HATR)
AF IMT 797, *Job Qualification Standard Continuation/Command JQS*
AF IMT 803, *Report of Task Evaluations*
AF IMT 813, *Request for Environmental Impact Analysis*
AF IMT 847, *Recommendation for Change of Publication*
AF IMT 853, *Air Force Wildlife Strike Report*
AF IMT 1042, *Medical Recommendations for Flying or Special Operational Duty*
AF IMT 1098**,** *Special Task Certification and Recurring Training*
AF IMT 2096**,** *Classification/On-The-Job Training Action*
DD Form 2349, *NOTAM Control Log*
DD Form 2861, *Cross-Reference*
AF IMT 3645, *PIDP Submission Form*

AFTO Form 277, *Results of Runway Braking Test*
DD Form 175, *Military Flight Plan*
DD Form 1801, DoD *International Flight Plan*
DoD FLIP, Revision Report
FAA Form 7460-1, *Notice of Proposed Construction or Alteration*
FAA Form 7460-2, *Notice of Actual Construction or Alteration*

JOHNNY A. WEIDA, Maj Gen, USAF
Asst DCS, Operations, Plans, and Requirements

(AFGSC)

FERDINAND B. STOSS III
Brigadier General, USAF
Director of Operations

Attachment 1

GLOSSARY OF REFERENCES AND SUPPORTING INFORMATION

References

Air Force Records Information Management System (AFRIMS), AF Records Disposition Schedule (RDS)

AFPAM 10-100,ictect*Airman's Manual,* 1 March 2009

AFI 10-1001,ictect*Civil Aircraft Landing Permits,* 1 September 1995

AFI 10-1002,ictect*Agreements for Civil Aircraft Use of Air Force Airfields,* 1 September 1995

AFI 10-1003,ictect*Use of Air Force Installations for Non-Government Business by Civil Air Carriers Participating in the Civil Reserve Air Fleet (CRAF) Program,* 1 August 1996

AFI 10-2501,ictect*Air Force Emergency Management (EM) Program Planning and Operations,* 24 January 2007

AFI 10-401,ictect*Air Force Operations Planning and Execution,* 7 December 2006

AFI 10-707,ictect*Spectrum Interference Resolution Program,* 20 June 2005

AFI 11-201,ictect*Flight Information Publication,* 31 March 2009

AFI 11-202, Vol 3, *General Flight Rules,* 22 October 2010

AFJI 11-204,ictect*Operational Procedures for Aircraft Carrying Hazardous Materials,* 11 November 1994

AFI 11-208_IP,ictect*Department of Defense Notice to Airmen (NOTAM) System,* 3 June 2011

AFMAN 11-217, Vol 1 *Instrument Flight Procedures,* 3 January 2005

AFI 11-218,ictect*Aircraft Operations and Movement on the Ground,* 28 October 2011

AFJMAN 11-213,ictect*Military Flight Data Telecommunications System,* 26 Aug 1994

AFJMAN 11-225_IP,ictect*US Standard Flight Inspection Manual,* 1 October 2005

AFI 11-230,ictect*Instrument Procedures,* 27 September 2013

AFI 11-255, Vol 3, *Integrated Flight Management Responsibilities and Procedures,* 8 March 2012

AFI 13-202,ictect*Overdue Aircraft,* 11 March 2010

AFI 13-204v1,ictect*Airfield Operations Career Field Development,* 9 May 2013

AFI 13-204v2,ictect*Airfield Operations Standardization and Evaluations,* 1 September 2010

AFI 13-207,ictect*Preventing and Resisting Aircraft Piracy (Hijacking) (FOUO),* 21 June 2010

AFI 13-213,ictect*Airfield Driving,* 1 June 2011

AFVA 13-221,ictect*Control Tower Light Signals,* 1 November 2001

AFI 14-205,ictect*Geospatial Information and Services (GI&S),* 5 May 2010

AFMAN 15-111,ictect*Surface Weather Observations,* 27 February 2013

AFMAN 15-124,ictect*Meteorological Codes,* 28 February 2013

AFI 21-101,ictect*Aircraft and Equipment Maintenance Management,* 26 July 2010

AFI 23-201,ictect*Fuels Management,* 23 January 2012

AFMAN 24-306_IP,ictect*Manual for Wheeled Operator,* 1 July 2009

AFI 31-101,ictect*Integrated Defense,* 8 October 2009

AFI 31-204,ictect*Air Force Motor Vehicle Traffic Supervision,* 14 July 2000

AFI 32-1002,ictect*Snow and Ice Control,* 19 October 2011

AFI 32-1041,ictect*Pavement Evaluation Program,* 10 September 2013

AFI 32-1042, *Standards for Marking Airfields,* 27 October 2005

AFI 32-1043,ictect*Managing, Operating, and Maintaining Aircraft Arresting Systems,* 30 March 2012

AFI 32-1044,ictect*Visual Air Navigation Systems,* 29 May 2013

AFH 32-1084,ictect*Facility Requirements,* 1 September 1996

AFI 32-7062,ictect*Comprehensive Planning*, 27 June 2013

AFI 32-7063,ictect*Air Installation Compatible Use Zone Program,* 13 September 2005

AFH 32-7084,ictect*AICUZ Program Managers Guide,* 1 March 1999

AFI 33-324, *The Information Collections and Reports Management Program,*6 March 2013

AFI 33-360, *Publications and Forms Management*, 25 September 2013

AFI 36-401,ictect*Employee Training and Development*, Attachment 2, 28 June 2002

AFI 36-507,ictect*Mobilization of the Civilian Work Force*, 21 July 1994

AFI 36-701,ictect*Labor Management Relations*, 27 July 1994

AFI 36-1001,ictect*Managing the Civilian Performance Program,* 1 July 1999

AFI 36-1401,ictect*Position Classification*, 1 August 1997

AFI 36-2101,ictect*Classifying Military Personnel (Officer and Enlisted),* 25 June 2013

AFI 36-2201,ictect*Air Force Training Program,* 15 September 2010

AFMAN 36-2234,ictect*Instructional System Development,* 1 November 1993

AFI 36-2807,ictect*Headquarters United States Air Force, Deputy Chief of Staff Operations, Plans and Requirements Annual Awards Program,* 18 July 2007

AFI 48-123,ictect*Medical Examination and Standards*, 24 September 2009

AFI 51-503,ictect*Aerospace Accident Investigations*, 26 May 2010

AFI 51-701,ictect*Negotiating, Concluding, Reporting, and Maintaining International Agreements,* 16 August 2011

AFI 63-138,ictect*Acquisition of Services,* 21 May 2013

AFI 90-802,ictect*Risk Management,* 11 February 2013

AFMAN 91-201,ictect*Explosive Safety Standards,* 17 November 2008

AFI 91-202,ictect*The US Air Force Mishap Prevention Program,* 5 August 2011

AFI 91-204,ictect*Safety Investigations and Reports,* 24 September 2008

AFMAN 91-223,ictect*Aviation Safety Investigations and Reports,* 16 May 2013

AFI 91-206_IP,ictect*Participation in a Military or Civil Aircraft Accident Safety Investigation,* 8 July 2004

AFPAM 91-212,ictect*Bird/Wildlife Aircraft Strike Hazard (BASH) Management Techniques,* 1 February 2004

ETL 02-19,ictect*Airfield Pavement Evaluation Standards and Procedures,* 12 November 2002

ETL 04-2,ictect*Standard Airfield Pavement Marking Schemes,* 19 July 2004

ETL 04-10, Change 1, *Determining the Need for Runway Rubber Removal,* 12 May 2004

ETL 97-17,ictect*Guide Specification – Paint and Rubber Removal from Roadway and Airfield Pavements,* 1 December 1997

UFC 3-260-01,ictect*Airfield and Heliport Planning and Design Criteria,* 17 November 2008

UFC 3-535-01,ictect*Visual Air Navigation Facilities,* 17 November 2005

DOD Handbook1023/4,ictect*Maintenance of Visual Air Navigation Facilities,* 30 November 1998

DOD Regulation 5400.7,ictect*DOD Freedom of Information Act,* September 1998

DOD Regulation 700.14R, Vol 7A, *Military Pay Policy and Procedures, Active Duty and Reserve Pay,* September 2008

150/5220-9, *Aircraft Arresting Systems on Civil Airports***,** 20 December 2006

150/5300-13, *Airport Design,* 28 September 2012

150/5340-1,ictect*Standards for Airport Markings,* 3 September 2010

150/5340-18,ictect*Standards for Airport Sign Systems,* 16 August 2010

150/5345-44,ictect*Specification for Taxiway and Runway Signs,* 28 September 2007

FAA JO 1600.75,ictect*Protecting Sensitive Unclassified Information (SUI),* 1 February 2005

FAA JO 1900.47D,ictect*Air Traffic Organization Operational Contingency Plan,* 1 December 2006

FAA JO 6191.2,ictect*Standard Terminal Automation Replacement System (STARS) SYS Admin Security Handbook,* 29 June 2005

FAA JO 6750.16E,ictect*Siting Criteria for Instrument Landing Systems,* 14 May 2014

FAA JO 6950.2D,ictect*Electrical Power Policy Implementation at National Airspace Systems Facilities,* 6 October 2003

FAA JO 7110.10X,ictect*Flight Services,* 20 February 2014

FAA JO 7110.65V,ictect*Air Traffic Control,* 20 February 2014

FAA JO 7110.67G,ictect*Special Aircraft Operations,* 3 Apr 2014

FAA JO 7210.3Y,ictect*Facility Operation and Administration,* 11 February 2010

FAA JO 7400.2K,ictect*Procedures for Handling Airspace Matters,* 29 Febuary 2014

FAA JO 7610.4,ictect*Special Operations,* 27 August 2009

FAA JO 7930.2P,ictect*Notices to Airmen (NOTAM),* 19 February 2014

FAAO JO 6850.5C,ictect*Maintenance of Lighted Navigational Aids,* 27 March 1995

Part 65,ictect*Certification: Airmen Other Than Flight Crewmembers,* 10 August 1962

Part 139,ictect*Certification of Airports,* 3 May 2004

ICAO DOC Annex 10 Volume 2,ictect*Aeronautical Telecommunications,* October 2001

T.O. 33-1-23,ictect*Equipment and Procedures for Obtaining Runway Condition Readings,* 30 November 2006

T.O. 36-1-191,ictect*Technical and Managerial Reference for Motor Vehicle Maintenance,* 20 July 2007

Adopted Forms

AF Form 847, *Recommendation for Change of Publication*

AF Form 4058, *Airfield Operations Policy Waiver*

Abbreviations and Acronyms

AAFM—Assistant Airfield Manager (Civilians Only)

ACCTLR—Assistant Chief Controller

ABS—Anti-Lock Braking System

ADI—Airfield Driving Instruction

ADLS—Advanced Distance Learning System

ADPM—Airfield Driving Program Manager

AF—Air Force

AFAS—Airfield Automation System

AFCEC—Air Force Civil Engineering Center

AFFSA—Air Force Flight Standards Agency

AFH—Air Force Handbook

AFI—Air Force Instruction

AFJI—Air Force Joint Instruction

AFJMAN—Air Force Joint Manual

AFM—Airfield Manager

AFMAN—Air Force Manual

AFJQS—Air Force Job Qualification Standard

AFPAM—Air Force Pamphlet

AFPD—Air Force Policy Directive

AFRC—Air Force Reserve Command

AFREP—Air Force Representative

AFSC—Air Force Specialty Code

AFTR—Air Force Electronic Training Records

AICUZ—Air Installation Compatible Use Zone

AIM—Aeronautical Information Manual

AIREVAC—Aeromedical Evacuation

AIS—Automatic Identification System

AFRIMS—Air Force Records Information Management System

AM—Airfield Management

AMOC—Airfield Management Operations Coordinator

AMOM—Airfield Management Operations Manager (Civilian Only)

AMOPS—Airfield Management Operations

AMOS—Airfield Management Operations Supervisor

AMSL—Airfield Management Shift Lead

AMTM—Airfield Management Training Manager (Civilians Only)

ANAAM—Assistant NCOIC, Airfield Automation Manager

ANATCT—Assistant NCOIC, Air Traffic Control Training

ANG—Air National Guard

ANSE—Assistant NCOIC, Standardization and Evaluation

AO—Airfield Operations

AOB—Airfield Operations Board

AOC—Air Operations Center

AOF—Airfield Operations Flight

AOF/CC—Airfield Operations Flight Commander

AOI—Airfield Operations Instruction

AOSS—Airfield Operations System Specialist

ARFF—Aircraft Rescue and Fire Fighting

ARTCC—Air Route Traffic Control Center

ASR—Airport Surveillance Radar

ASRR—Airfield Suitability and Restrictions Report

ATARS—Air Traffic Activity Reporting System

ATC—Air Traffic Control

ATCS—Air Traffic Control Specialist

ATCALS—Air Traffic Control and Landing Systems

ATCSE—Air Traffic Control Simulation Equipment

ATCT—Air Traffic Control Tower

ATCTS—Air Traffic Control Training Series

ATIS—Automatic Terminal Information Service

ATSN—Assistant NCOIC, ATC Training and Standardization

BAS—Basic Allowance for Subsistence

BASH—Bird/Wildlife Aircraft Strike Hazard

BHWG—Bird Hazard Working Group

BLOS—Beyond Line of Sight

BWC—Bird Watch Condition

CAT—Category

CBMS—Capabilities-Based Manpower Standard

CBT—Computer Based Training

CBRNE—Chemical, Biological, Radiological, Nuclear and high-yield Explosives

CCG—Combat Communications Group

CCT—Special Tactics Combat Control Team

CCTLR—Chief Controller

CD (-R)—Compact Disc (-Recordable)

CDR—Continuous Data Recording

CE—Civil Engineering

CEMP—Comprehensive Emergency Management Plan

CFETP—Career Field Education and Training Plan

CFM—Career Field Manager

CFR—Code of Federal Regulations

CMA—Controlled Movement Area

CMAV—Controlled Movement Area Violation

CMS—Case Management System

COA—Certificate of Authorization

COMSEC—Communications Security

CoP—Community of Practice (Air Force Portal registration required)

COR—Contracting Office Representative

CP—Command Post

CPD—Core Personnel Document

CPF—Civilian Personnel Flight

CRM—Crew Resource Management

CSIL—Customer Service Information Line

CTO—Control Tower Operator

CTRD—Certified Tower Radar Display

CWW—Cooperative Weather Watch

DAAS—DoD Advanced Automation System (also known as STARS)

DAFM—Deputy Airfield Manager

DALR—Digital Audio Legal Recorder

DAT—Digital Audio Tape

DBRITE—Digital Bright Radar Indicator Tower Equipment

DD Form—Department of Defense Form

DH—Decision Height

DLT—Digital Linear Tapes

DNIC—Duties Not to Include Controlling

DoD—Department of Defense

DoT—Department of Transportation

DSM—Diagnostic and Statistical Manual

DSN—Defense Switched Network

DTAS—Digital Terminal Automation Systems

DTL—Duty Task List

DTM—Digital Terrain Maps

DVRS—Digital Voice Recorder System

EDIT—Experiencing Difficulty In Training

EMI—Electromagnetic Interference

EOC—Emergency Operations Center

EO/IR—Electro-Optical Infrared

ETCA—Education and Training Course Announcement

ETL—Engineering Technical Letter

ETVS—Enhanced Terminal Voice Switch

FAA—Federal Aviation Administration

FAAO—Federal Aviation Administration Order

FAF—Final Approach Fix

FCG—Foreign Clearance Guide

FCT—Facility Continuation Training

FD—Fire Department

FDS—Flight Data System

FEQ—Field Evaluation Questionnaire

FFM—Far Field Monitor

FLIP—Flight Information Publication

FLT—Front Load Training

FOD—Foreign Object Damage

FOIA—Freedom of Information Act

FOUO—For Official Use Only

FSS—Flight Service Station

FTOR—Failure To Obtain (or Maintain) a Rating

FUB—Facilities Utilization Board

FWG—Facility Working Group

GATR—Ground Air Transmitter Receiver

GCA—Ground Controlled Approach

GE—Ground Emergency

GENOT—General Notice

GPS—Global Positioning System

HATh—Height Above Threshold

HATR—Hazardous Air Traffic Report

HDL—High Density Logger

HFS—High Friction Surface

HIRL—High Intensity Runway Lights

HQ AFFSA—Headquarters Air Force Flight Standards Agency

IAW—In Accordance With

ICAO—International Civil Aviation Organization

IFE—In-Flight Emergency

IFR—Instrument Flight Rules

IMC—Instrument Meteorological Conditions

ILS—Instrument Landing System

INST—Instrument or Instrument Hold Line

IR—Ice on Runway

ISD—Instructional Systems Development

ISR/RSTA—Intelligence, Surveillance and Reconnaissance/Reconnaissance Surveillance and Target Acquisition

JO—Joint Order

KSA—Knowledge, Skills and Abilities

LAAS—Low Altitude Alert System

LAN—Local Area Network

LDA—Localizer Directional Aid

LMR—Land Mobile Radio

LOA—Letter of Agreement

LOI—Local Operating Instruction

LOP—Local Operating Procedure

LOS—Line of Sight

LRF/D—Laser Range-Finder/Designator

LSR—Loose Snow on Runway

MAJCOM—Major Command

MARE—Major Accident Response Exercise

MASZ—Military Alert Suppression Zones

MCI—Mode C Intruder

MDS—Mission Design Series

MEARTS—Micro Enroute Automated Radar Tracking System

MIA—Minimum IFR Altitude

MLS—Microwave Landing System

MM—Middle Marker

MMLS—Mobile Microwave Landing System

MOU—Memorandum of Understanding

MRI—Master Reference Index

MSAW—Minimum Safe Altitude Warning

MTI—Moving Target Indicator

MTL—Master Task Listing

MTP—Master Training Plan

MTTR—Master Task and Technical Reference

MVA—Minimum Vectoring Altitude

NAAM—NCOIC, Airfield Automation Manager

NAF—Numbered Air Force

NAMO—NCOIC, Airfield Management Operations

NAMT—NCOIC, Airfield Management Training

NAS—National Airspace System

NATCT—NCOIC, Air Traffic Control Training

NAVAID—Navigational Aid

NLT—No Later Than

NM—Nautical Mile

NOTAM—Notice to Airmen

NSE—NCOIC, ATC Standardization and Evaluation

N-TFS—New Tactical Forecast System

OBO—Official Business Only

OCL—Operational Capability Level

OG—Operations Group

OG/CC—Operations Group Commander

OI—Operating Instruction

OJT—On the-Job Training

OPLAN—Operations Plan

OPR—Office of Primary Responsibility

OSF—Operations Support Facility

OSS—Operations Support Squadron

PAPI—Precision Approach Path Indicator

PAR—Precision Approach Radar

PCA—Permanent Change of Assignment

PCAS—Primary Crash Alarm System

PCS—Permanent Change of Station

PCG—Position Certification Guide

PHA—Preventive Health Assessment

PIDP—Programmable Indicator Data Processor

POFZ—Precision Obstacle Free Zone

POV—Privately Owned Vehicle

PM—Preventive Maintenance

PPR—Prior Permission Required

PSR—Packed Snow on Runway

PWS—Performance Work Statement

QA—Quality Assurance

QRC—Quick Reaction Checklist

QTP—Qualification Training Package

RABM—Range Azimuth Beacon Monitor

RAC—Risk Assessment Code

RAPCON—Radar Approach Control

RAPTOR—Radar Audio Playback Terminal Operations Recording

RCR—Runway Condition Reading

RCS—Runway Control Structure

RDS—Records Disposition Schedule

RFC—Radar Final Control

RIF—Recent Information File

RM—Risk Management

RMP—Radar Monitoring Position

RPA—Remotely Piloted Aircraft

RPI—Runway Point of Intercept

RRF—Ready Reference File

RSC—Runway Surface Condition

RSI—Remote Status Indicator

RSRS—Reduced Same Runway Separation

RVR—Runway Visual Range

RWY—Runway

SAA—Senior Airfield Authority

SAR—Synthetic Aperture Radar

SATCOM—Satellite Communications

SAV—Staff Assistance Visit

SC—Senior Controller

SCN—Secondary Crash Net

SCPD—Standard Core Personnel Document

SDF—Simplified Directional Facility

SE—Safety

SEI—Specialty Experience Identifier

SF—Security Forces

SIGINT—Signals Intelligence

SIGNAL—Simulation and Integration of Ground, Network, and Air Links

SII—Special Interest Item

SLR—Slush on Runway

SM—Statute Mile

SMS—Safety Management System

SNMPc—Simple Network Messaging Protocol

SOF—Supervisor of Flying

STANAG—Standardization Agreement (NATO)

STAR—Standard Arrival Route

STARS—Standard Terminal Automation Replacement System

STS—Specialty Training Standard

SUA—Special Use Airspace

SUI—Sensitive Unclassified Information

TACAN—Tactical Air Navigation

TCAS—Traffic Alert and Collision Avoidance System

TCW—Tower Controller Workstation

TDW—Tower Display Workstation

TDY—Temporary Duty

TERPS—Terminal Instrument Procedures

TO—Technical Order

TOI—Training Operating Instruction

TR—Technical Reference

TRB—Training Review Board

TSC—Training Status Codes

TSN—NCOIC, ATC Training and Standardization

TSS—Tower Simulation System

UA—Unmanned Aircraft

UAS—Unmanned Aircraft System

UGT—Upgrade Training

UHF—Ultra High Frequency

UMD—Unit Manning Document

UPS—Uninterruptible Power Supply

US—United States

USAF—United States Air Force

USAFR—United States Air Force Reserve

USNO—United States Naval Observatory

UTC—Unit Type Code

UTC—Universal Time Coordinated

UTM—Unit Training Manager

VCO—Vehicle Control Officer

VCNCO—Vehicle Control Noncommissioned Officer

VFR—Visual Flight Rules

VMC—Visual Meteorological Conditions

VHF—Very High Frequency

WR—Wet Runway

WFHQ—War-Fighting Headquarters

WS—Watch Supervisor

XP—Plans

Terms

Advanced Airfield Manager Course—This course provides training for selected USAF personnel the knowledge and skills needed to perform the duties of the Airfield Manager. This is an advanced AM course designed primarily for the USAF Senior NCO Airfield Manager. Other potential candidates for this course include USAF Airfield Operations Flight Officers, AF civilian Airfield Managers, Civil Engineering Community Planners, Flying Safety Officers, as well as civilian contractors performing AM duties (to be approved on case-by-case basis).

Advanced Airport Safety and Operations Specialist (ASOS) School—Advanced Schools are tailored for individuals who have either attended an earlier ASOS school, experienced one or more annual FAA Certification Inspections or have at least two years of experience in airport operations. The school has fewer prepared presentations, and more group Part 139 problem-solving exercises so that all attendees can actively participate in the proceedings. Participants are encouraged to discuss best management practices and lessons learned at their airports or from other experiences. **Benefits:** This hands-on interaction with industry experts will enhance attendee's knowledge and problem solving skills involving critical airfield functions.

Aerodrome—A defined area on land or water (including any buildings, installations and equipment) intended to be used either wholly or in part for the arrival, departure, and movement of aircraft.

Aircraft Mishap Investigation Course—This course provides aircraft mishap investigation techniques and procedures. Course provided by HQ Air Force Safety Center, Kirtland AFB, NM.

Airfield Check—Conducted by Airfield Management personnel to the examine the primary takeoff, landing and taxi surfaces in response to in-flight or ground emergencies, Runway Surface Condition or Runway Condition Reading assessments, Foreign Object Damage removal, and for Bird/Wildlife Aircraft Strike Hazards and Habitat control.

Airfield Driving Instruction (ADI)—Formerly known as the flight line driving instruction. Establishes local procedures for driving a vehicle on the airfield.

Airfield Facilities—Includes runways, taxiways, aircraft parking and servicing areas, ATC facilities, Airfield Management Operations, ATCALS, aircraft fire suppression and rescue services, airfield lighting systems and systems to hold or stop aircraft (where required).

Airfield Inspection—Conducted by Airfield Management personnel to identify discrepancies and/or hazards on the airfield (e.g., signs, markings, lighting, pavements, aircraft arresting system, obstructions, obstacles, construction areas, etc.).

Airfield Management (AM)—A function that conducts airfield inspections and checks for safety and compliance with planning and design criteria. Plans, organizes and directs airfield activities to include airfield construction/repairs, airfield driving program, ice/snow removal operations, Bird/Wildlife control, etc. Procures, maintains, and produces information on safe operation of aircraft through the national and international airspace system such as Flight Information Publications, aeronautical charts and maps, Notice to Airmen (NOTAM), local airfield and navigational aid status, and weather information. Process domestic and international

flight plans. Coordinates with base agencies to meet aircrew requirements for billeting, messing, refueling, transportation, and transient aircraft maintenance.

Airfield Management Advanced Distance Learning System (ADLS) Craftsman Course—Provides advanced training through distance learning for personnel in upgrade training to the 7-skill level.

Airfield Management Operations Coordinator (AMOC) Position Certification Guide—This publication provides detailed training requirements, training objectives and training evaluations to qualify personnel required to perform duties of the AMOC or civilian equivalent.

Airfield Operating Hours—The hours of airfield operations as published in the MAJCOM Supplement.

Airfield Management Operations Supervisor (AMOS)/Shift Lead (AMSL)Position Certification Guide—This publication provides detailed training requirements, training objectives and training evaluations to qualify personnel required to perform duties of the AMOS/AMSL or civilian equivalent.

Airfield Manager Position Certification Guide—This publication provides detailed training requirements, training objectives and training evaluations to qualify personnel required to perform duties of the Airfield Manager.

Airfield Operations Instruction (AOI)—Formerly known as the base flying regulation. Defines local procedures for Airfield Management and ATC.

Airport Certification Procedures Course—This course is for personnel who will be responsible for the certification of airports and enforcement of 14 CFR Part 139. Classroom subjects to be covered are airport inspection procedures to assure compliance with 14 CFR Part 139 Subpart D, identification of violations to 14 CFR Part 139, preparation of administrative enforcement actions, issuance of certificates, and review of airport certification manuals and related plans. The class includes labs, workshops, and field trips to provide hands-on training. Course provided by the Federal Aviation Administration. **Benefits:** In-depth technical training on airport inspection procedures will increase knowledge and ability of airfield managers to improve airfield safety. Training will also prepare personnel for responsibilities associated with joint-use facilities and civil aircraft operations at military airfields.

Air Traffic Control and Landing Systems—Department of Defense facilities, personnel, and equipment (fixed, mobile, and seaborne) with associated avionics to provide safe, orderly, and expeditious aerospace vehicle movements worldwide.

Air Traffic Control Tower Operator—An individual who meets the requirements for and is issued a control tower operator certificate. An air traffic control tower operator may perform duty in either a control tower or a radar facility.

Approach End of Runway—That end of a runway nearest to the direction from which the final approach is made.

Air Traffic Control Duty—ATC duty refers to controlling live or simulated traffic, monitoring a trainee controlling live or simulated traffic, and conducting duties as a watch supervisor. **Note:** DNIC does not preclude monitoring a trainee on a simulator.

Air Traffic Control Experience—Compute ATC experience using the graduation date from ATC Technical School.

Air Traffic Coach—Air traffic control simulation equipment that is part of a Standard Automation Replacement System (STARS) facility.

Basic Airport Safety and Operations Specialist (ASOS) School—The two-day Basic ASOS School is designed for individuals who are relatively new to airport operations, or have not attended a Basic ASOS before and are currently working in airport management, planning or operations. Through prepared presentations instructed by industry professionals, the Basic ASOS School will cover the following elements of Part 139 (subject to change): 14 CFR Part 139 Requirements, Records, Paved/Safety Areas, Markings, Signs & Lighting, ARFF, AEP, Self-Inspection Program. **Benefits:** Prepare attendees to assume increased responsibility in the day-to-day management of the airfield by providing technical information on the operation, maintenance and safety of the airfield environment.

Career Field Education and Training Plan (CFETP)—CFETP is a comprehensive core-training document that identifies: life-cycle education and training requirements; training support resources, and minimum core task requirements for a specialty. The CFETP aims to give personnel a clear path and instill a sense of industry in career field training. It is the formal training contract between the AF Career Field Manager and AETC for formal accession and life-cycle skills training.

Computer Based Training (CBT)—Student conducted training through lessons received at a computer terminal and via computer interaction.

Closed—An airfield is "closed" when no flying activity is permitted. If the closure is for a particular type of aircraft or operation, it must be so stated. For example: "Closed to aircraft not involved in Volant Rodeo."

Controlled Movement Area (CMA)—As defined in Airfield Operations Instructions, any portion of the airfield requiring aircraft, vehicles and pedestrians to obtain specific Air Traffic Control approval for access (normally via two-way radio contact with the control tower). Controlled Movement Areas include but are not limited to areas used for takeoff, landing and as required taxiing of aircraft. **Note:** This definition is used in lieu of "movement area" as defined in the FAA Pilot Controller Glossary.

Controlled Movement Area Violation (CMAV) Event—An airfield infraction caused by aircraft, vehicles, or pedestrians entering the control movement area without specific control tower approval. This definition includes runway incursions and infractions caused by communication errors. Refer to AFMAN 91-223 paragraphs 1.3.1.8. for reportable HATR reporting procedures and 1.3.1.9. for reportable CMAV events.

Control Tower Operator (CTO)—Includes local control, ground control and flight data positions

Departure End of Runway—That end of a runway nearest to the direction in which initial departure is made.

Dual Certification—A controller is dual certified when they hold current position certifications in more than one facility. The controller must maintain proficiency standards in both facilities to retain dual certification status.

Dual Qualified—A controller is dual qualified when they have been awarded both a radar and a control tower SEI.

Evaluation—A judgment expressed as a measure or ranking of trainee achievement, instructor (trainer) performance, process, application, training material and other factors in air traffic control training.

External Stores—Items mounted on the external portions of an aircraft (e.g., armament, fuel tanks, baggage pods, etc.) that can be released or jettisoned from an aircraft.

Facility Rating—An endorsement by the Control Tower Operator Examiner, NCOIC/Assistant NCOIC, Standardization and Evaluation or NCOIC/Assistant NCOIC, Training and Standardization that an individual has demonstrated the competence, qualifications, and skills required to control traffic at positions specified for the following type of facility rating issued.

1) Control Tower—Includes all positions except for the watch supervisor, coordinator, and RFC.

2) Ground Controlled Approach (GCA)—Includes all positions except watch supervisor, coordinator and RFC.

3) Radar Approach Control (RAPCON)—Includes all positions except watch supervisor, coordinator, RFC, and special ATC positions (e.g., MOA, Range Monitor, etc.).

4) Radar Final Control (RFC)—Includes position(s) that conduct precision approach radar (PAR) approaches and/or airport surveillance radar (ASR) approaches and monitors instrument approaches.

Flightline—Any area or facility including apron, hardstand and ramps on or in which aircraft may be parked, stored, serviced or maintained.

Foreign Object Damage Check—Conducted by AM personnel prior to start of normal flying activities or in response to FOD reports by SOF, control tower, aircraft, etc.

Go/No-Go—The stage at which an individual has gained enough skill, knowledge and experience to perform the tasks without supervision. Meeting the task standard.

Ground Controlled Approach (GCA)—A fixed, mobile, or transportable facility that provides radar arrival and RFC services within airspace designated by an approach control facility.

Host Wing Commander—The individual with ultimate responsibility for operating the airfield.

Joint Facility—Air traffic control facility that divides responsibilities between the USAF and another military or civil agency.

Joint—Use Airfield—A USAF installation where agreements exist among the Air Force, civil, and host nation authorities for joint-use of all or a portion of airfield facilities.

Knowledge—Use of the mental process, which enables a person to recall facts, identify concepts, apply rules or principles, solve problems, and think creatively. Knowledge is not always directly observable. A person manifests knowledge through performing associated overt tasks.

Lighting Check—Conducted by Civil Engineer (electrician) or AM personnel preferably during periods of darkness (including pre-dawn and dusk) to determine the operability of airfield lighting systems.

Local Operating Procedures (LOP)—Supplemental procedures issued as letters of agreement, operations letters, operating instructions, memorandum of understanding, squadron regulations, operations plans, or base manual or instructions.

Lost Link—UAS pilot/operator has lost the ability to provide real-time control of the UAS. Loss may be permanent or temporary.

Major Command (MAJCOM)—For the purpose of this instruction, includes all USAF Major Commands plus the Air National Guard Readiness Center, Air Force Reserve Command, Direct Reporting Units, and Field Operating Agencies.

Master Reference Index—A current listing of all mission essential documents necessary for ATC operations. The listing contains the document number, title and date.

Master Task and Technical Reference Listing—All work center/facility tasks and corresponding technical reference that supports qualification, upgrade, recurring, review and specialized training.

Master Training Plan (MTP)—Employs a strategy for ensuring the completion of all work center job requirements by using a Master Task Listing (MTL) and provides milestones for task, Career Development Course completion, and prioritizes deployment/UTC, home station training tasks, upgrade, and qualification tasks.

Micro Enroute Automated Radar Tracking System (Micro-EARTS)—A modular, micro-computer-based air traffic system.

Military Airspace Management Course—This course provides instruction on the process of establishing, modifying and managing domestic Special Use Airspace and Airspace for Military Use in accordance with the Federal Aviation Administration, National Environmental Policy Act, and military directives. Course provided by the 81st Training Wing, Keesler AFB, MS.

Mishap—A mishap is an unplanned occurrence, or series of occurrences, that results in damage or injury and meets Class A, B, C, D or Class E event reporting criteria IAW AFI 91-204, paragraph 1.10. Damage or injury includes: damage to DoD property (excluding normal wear and tear or aging); occupational illness to DoD military or civilian personnel; injury to DoD military personnel on- or off-duty; injury to on-duty DoD civilian personnel; damage to public or private property, or injury or illness to non-DoD personnel caused by Air Force operations.

Multiple Approach—When more than one aircraft is on the radar final approach at the same time. Normal radar separation standards apply, and a controller controls only one aircraft, but may monitor two aircraft or two flights of two aircraft simultaneously.

NCOIC, Airfield Management Operations (NAMO) and NCOIC, Airfield Management Training (NAMT) Position Certification Guide—This publication provides detailed training requirements, training objectives and training evaluations to qualify personnel required to perform duties of the NAMO, NAMT or civilian equivalent.

Objective—A statement that specifies what behavior is to be exhibited, the conditions under which behavior will be accomplished and the minimum standard of performance. Objectives

describe only the behaviors that directly lead to or specifically satisfy a job performance requirement. An objective is a statement of instructional intent.

Official Business Only (OBO)—The airfield is closed to all transient military aircraft for obtaining routine services such as fueling, passenger drop off or pickup, practice approaches, parking, etc. The airfield may be used by aircrews and aircraft if official government business (including civilian) must be conducted on or near the airfield and Prior Permission is received from the Airfield Management.

On-the—Job Training (OJT)—Hands-on, over-the-shoulder training conducted to certify personnel in both upgrade and job qualification training.

Overrun—Usually a non-stressed extension at each end of the runway. Do not use the extension as a landing area, except in instances where an aircraft emergency warrants its use. The extension is part of the controlled movement area, but do not use the extension for spacing/separation between aircraft.

Position Certification—An endorsement by the NCOIC, Standardization and Evaluation/Assistant NCOIC, Standardization and Evaluation/NCOIC, ATC Training and Standardization/Assistant NCOIC, ATC Training and Standardization or Control Tower Operator examiner that the applicant has demonstrated the competence, qualifications and skill required to operate at a specific position.

Position Certification Guide (PCG)—Position Certification Guides are documents used to assist the trainer and supervisor in logically training AO personnel in a specific duty position.

Precision Approach Radar (PAR)—Radar displaying range, azimuth, and elevation (in relation to a glide slope) normally encompassing an area from 10 to 20 miles on final approach to a position on the runway intercepted by the glide slope.

Prior Permission Required (PPR)—The airfield is closed to transient aircraft unless approval for operation is obtained from the appropriate commander through Airfield Management. PPR must be requested and approved before the flight departs to that airfield. The purpose of PPR is to control volume and flow of traffic rather than to prohibit it. Prior permission is required for all aircraft requiring transient alert service outside the published transient alert duty hours. All aircraft carrying hazardous materials must obtain prior permission as outlined in AFJI 11-204.

Proficiency—In order to be proficient, a controller must perform air traffic control duties under normal workload conditions in each operating position they are certified in within the last month.

Qualification Training Package—An instructional package designed for use at the unit to qualify, or aid qualification, in a duty position or program, or a piece of equipment. It may be printed, computer-based, or in other audiovisual media. QTPs do not require third-party certification and evaluation.

Qualified Controller—An individual who is position certified or facility rated and holds GS–2152, 13M3, AFSC 1C252 or 1C131 or above, and has been awarded a 053, 056, or 364 SEI.

Radar and Tower Coordination System—A radar and tower coordination system (lights serve as a reminder to the tower controller that an arriving radar controlled aircraft is in a defined location, or at a prescribed position). This system may supplement or simplify the voice coordination between facilities. It does not replace voice coordination.

Radar Approach Control (RAPCON)—A fixed, mobile, or transportable radar facility that provides approach control, arrival and RFC services using surveillance radar.

Radar Final Control (RFC)—An air traffic control service that provides navigational guidance or approach monitoring during the final approach phase of flight. This service normally includes precision approach radar (PAR) approaches, instrument approach monitoring using precision approach radar equipment when final approach courses are coincident, flight following, airport surveillance radar (ASR) approaches and safety alert services. Additional services are provided within system capability. A controller assigned to the radar final control position (called the radar final controller) normally provides this service.

Radar Final Control Facility—A fixed, mobile, or transportable radar facility that provides radar final control service. (Precision Approach Radar rating required for award of Special Experience Identifier).

Recurring Training—Training provided to periodically review selected current operational procedures and techniques.

Remotely Piloted Aircraft (RPA)—Replaces the term ―unmanned aircraft‖ as an element of the Air Force's group 4 and 5 UAS's (e.g., PREDATOR, REAPER, GLOBAL HAWK and SENTINEL).

Review Training—Training conducted for the purpose of correcting or precluding specific operational deficiencies. Review training is developed based on analysis of performance evaluations, supervisory observations, trends, operational evaluations, etc.

Runway Condition Reading (RCR)—A numerical reading that identifies the surface friction capability of the runway pavement, obtained using a decelerometer. The aircrew uses this information to determine runway braking action during takeoffs and landings.

Runway Control Structure (RCS)—A portable or fixed shelter where non-air traffic control personnel observe arriving and departing aircraft. The unit is near the active runway, and has two-way air- ground communications.

Runway Incursion—Any occurrence at an aerodrome involving the incorrect presence of an aircraft, vehicle or person on the protected area of a surface designated for the landing and take-off of aircraft. For the purpose of this instruction, the protected area is the same as the CMA. These are further classified into three operational categories:

1) Operational Error (OE)—A failure of the air traffic control system that results in loss of separation.

2) Pilot Deviation (PD)—The action of a pilot that results in the violation of ATC instructions, AFIs and/or FARs.

3) Vehicle/Pedestrian Deviation (V/PD)—Any entry or movement on the controlled movement area by a vehicle (including aircraft operated by non-pilots) or pedestrian that has not been authorized by Air Traffic Control.

Runway Surface Condition (RSC)—Identifies the condition of the runway surface when covered with slush, snow, ice or water.

Runway Suspension—A short-term condition that requires temporarily restricting aircraft arrivals and departures until corrected (e.g., FOD, severe bird/wildlife activity, snow and ice

removal checks, arresting systems maintenance/configuration changes, airfield construction, pavement repair, etc.).

Scheduled Air Carrier—An air carrier that holds a scheduled air carrier certificate and provides scheduled service year round between two or more points.

Senior Airfield Authority (SAA)—An individual designated/appointed by the component responsible for airfield operations at the direction of the Joint Force Commander. This individual is responsible for the control, priorities, operation and maintenance of an airfield to include the runways, associated taxiways, parking ramps, land and facilities whose proximity affect airfield operations.

Shared-Use—An airfield jointly used by civil and military flight activities that is located at a civil airport under control of civil authorities.

Simulation Scenario—Scripted scenarios designed to develop or maintain a controller's skills using simulation equipment (any simulation equipment developed for ATC use) or any static environment (to include non-radar and tower static boards).

Skill Level—The level of qualification within an awarded Air Force specialty, shown by the fourth digit of the Air Force Specialty Code.

Spall—Chipping or splintering associated with concrete deterioration.

Special Evaluation—Used to evaluate a qualified or suspended controller's performance.

Specialty Experience Identifier (SEI)—A three-character code that identifies special experience training not otherwise identified in the personnel data system. Specialty Experience Identifiers may permit rapid identification of individuals with special qualifications to meet peacetime assignments. They provide a means for identifying critical manning requirements during wartime or contingency operations when little lead time is available for training personnel in specific technical skills.

Specialty Training Standard (STS)—An Air Force publication that describes an Air Force specialty in terms of tasks and knowledge which an airman in that specialty may be expected to perform and identifies the training provided to achieve a 3-, 5-, or 7-skill level within an enlisted Air Force specialty. It further serves as a contract between Air Education and Training Command and the functional user to show the overall training requirements for an Air Force specialty code that are taught in formal schools and correspondence schools.

Stop Training—When a trainee is unable to accomplish knowledge based (including classroom instruction), simulator (including static scenarios), and OJT due to unforeseen events or inability to meet standards.

Supervisor of Flying (SOF)—A rated officer authorized by the flying unit commander to monitor and supervise current flight operations. A Supervisor of Flying may perform duties from the control tower.

Supplemental Training—Training for a portion of an Air Force Specialty without a change in AFSC. Formal training on new equipment, methods and technology that is not suited for on-the-job training.

Task—A unit of work activity or operation that forms a significant part of a duty. A task usually has clear beginning and ending points and directly observable or otherwise measurable

processes, frequently but not always resulting in a product that can be evaluated for quantity, quality or fitness in the work environment. A task is performed for its own sake; that is, it is not dependent upon other tasks, although it may fall in a sequence with other tasks in a duty or job array.

Task Certification Guide—A guide designed to provide training objectives, references and standards of performance for certification on specific tasks in non-control positions such as WS, CCTLR, etc.

Training Status Code—A coding system used by base education and training personnel to identify, change and manage airman qualification and skill level upgrade processes. Refer to AFI 36-2201, Attachment 11, for a listing of each training status code and their definitions.

UA Zone—Marshalling areas, defined by geographic, visual or GPS reference, used by UA and ATC as departure/arrival points to/from airfield, as depicted in the COA. UA Zones are also used for lost link and emergency orbit points for UA.

Unauthorized Landing—A landing at an Air Force airfield by a civil aircraft without prior authority (approved DD Form 2401 and 24 hours prior notice).

Uncontrolled Movement Areas—Taxiways and ramp areas not under the control of air traffic. **Note:** This definition is used in lieu of "non-movement area" as defined in the Federal Aviation Administration Pilot Controller Glossary.

Underrun—See overrun.

Wet Runway—When water is the only form of visible moisture on 25% or more of the runway surface area (whether in isolated areas or not).

Attachment 2

AIRFIELD OPERATIONS INSTRUCTION (AOI) REQUIREMENTS

A2.1. All applicable items in this attachment must be addressed in the base AOI. **Note:** Specific procedures may be outlined in a separate local directive; however, that directive must be referenced in the base AOI.

A2.1. (AFGSC) Units must submit the list of required items for publication in the Base AOI provided in this attachment and indicate the paragraph where each item is located in the AOI when submitting for MAJCOM approval (T-2).

A2.1.1. General Information Regarding Airfield Facilities

A2.1.1.1. Runway(s) and Taxiways: Airfield Diagram Depicting Runway/Taxiway Designations, runway(s) length, width and surface type, Field Elevation/Gradient, Designation of Primary Instrument Runway, Depiction of Critical Areas, Intersection Departure Distances, and Instrument Hold Lines.

A2.1.1.2. Runway Selection Procedures

A2.1.1.3. Control of Ground Traffic in the Controlled Movement Area (CMA): Publish CMA diagrams and entry access/exit procedures in the AOI. Procedures must require specific ATC approval for entry onto CMAs and require direct two-way radio communication. (When direct two-way radio communication is not possible, procedures for use of light guns, light signals or escorts must be specifically outlined in an LOP). Local guidance must include procedures to reposition personnel to a safe distance from the CMA and to recall personnel from controlled movement areas in the event of a tower/vehicle radio failure.

A2.1.1.4. Airfield Lighting Systems

A2.1.1.5. Permanently Closed/Unusable Portions of the Airfield

A2.1.1.6. Aircraft Arresting Systems: Describe the type, location and standard configuration and coordination procedures for aircraft arresting systems. Use easy to understand descriptions such as "operational, not operational", “configured, not configured” and "in-service, out of service" consistently when reporting system status.

A2.1.1.7. Parking Plan/Restrictions

A2.1.1.7. **(AFGSC)** Restrictions must specifically address wing tip, jet blast, and parking restrictions **(T-2).**

A2.1.1.8. Air Traffic Control Facilities: Operating Hours and Designated Airspace

A2.1.1.9. Local Frequencies/Channelization

A2.1.1.10. ATCALS, to include Preventive Maintenance Inspection (PMI) schedule

A2.1.1.11. Transient Alert: Services/Facilities Available to Support Transient Aircraft

A2.1.1.12. Automatic Terminal Information Service (ATIS) Procedures

A2.1.1.13. Aircraft Special Operations Areas/Ramps: Arm/De-Arm Areas, Engine Run-up Areas, Drag Chute Jettison Areas, Hot Pit Refueling Areas, UAS Designated Start Areas

A2.1.1.14. Aircraft Towing Procedures

A2.1.1.15. Aircraft Taxiing Requirements/Routes (to include Heavy Aircraft Jet Thrust Avoidance Procedures, Taxiway/Taxilane Restrictions and Wingtip Clearance, etc.)

A2.1.1.16. Airfield Maintenance: Sweeper Operations, Grass Mowing, etc.

A2.1.1.17. Runway Surface Condition (RSC) and/or Runway Condition Reading (RCR) Values

A2.1.1.18. Procedures/requirements for conducting runway inspections/checks

A2.1.1.19. Procedures for Opening and Closing the Runway

A2.1.1.20. Procedures for Suspending and Resuming Runway Operations

A2.1.1.21. Engine Test/Run-up Procedures

A2.1.1.22. Noise Abatement Procedures

A2.1.1.23. Procedures for Protecting Precision Approach Critical Areas

A2.1.1.24. Restricted/Classified Areas on the Airfield

A2.1.1.25. Auxiliary power for ATCALS facilities.

A2.2. Flying Areas

A2.2.1. Local Flying Area/Designation of Airspace

A2.2.1. **(AFGSC)** Address Airspace Letters of Agreement and Certificates of Authorization file locations and mandatory review process/frequency IAW AFI 11-202V3_AFGSCSUP **(T-2).**

A2.2.2. VFR Local Training Areas

A2.3. VFR Procedures

A2.3.1. VFR Weather Minimums

A2.3.2. VFR Traffic Patterns

A2.3.3. Special Procedures (Helicopter, Functional Check Flight, Paradrop Operations, 360-Overhead Pattern Protection)

A2.3.4. Reduced Same Runway Separation Procedures

A2.3.5. Intersection Departures

A2.4. IFR Procedures

A2.4.1. Radar Traffic Patterns

A2.4.2. Availability/Restrictions for Surveillance (ASR) Approaches and Precision Approach Radar (PAR) Approaches/Monitoring

A2.4.3. Local Departure Procedures

A2.4.4. Radar Vector to Initial Procedures

A2.5. Emergency Procedures

A2.5.1. Operation of the Primary Crash Alarm System and Secondary Crash Net

A2.5.2. Emergency Response Procedures: In-Flight/Ground Emergency Procedures (On/Off Base).

A2.5.3. External Stores Jettison Area Procedures

A2.5.4. Fuel Dumping

A2.5.5. Emergency Aircraft Arresting System Procedures

A2.5.6. Hot Brake Area and Procedures

A2.5.7. Abandonment of Aircraft (Controlled Bail-Out, Ejection, Plotting Aircraft Coordinates)

A2.5.8. Personnel/Crash Locator Beacon Signal/Emergency Locator Transmitter (ELT) response procedures

A2.5.9. Hung Ordnance Procedures

A2.5.10. Wind Limitations on Control Tower

A2.5.11. Evacuation of AO Facilities

A2.5.12. Other Emergency Procedures as Locally Determined (flame out, precautionary approaches)

A2.5.13. Alternate Facility Procedures

A2.6. Flight Planning Procedures

A2.7. Miscellaneous Procedures

A2.7.1. Airfield Operations Board (AOB) membership

A2.7.1.1. Publish items that require annual review in the AOI and annotate each item with the month in which the items shall be reviewed.

A2.7.2. NOTAM Procedures

A2.7.3. Flight Information Publication (FLIP) Accounts, Procedures for Requesting Changes

A2.7.4. DELETED

A2.7.5. Prior Permission Requested (PPR) Procedures

A2.7.6. Air Evac Notification and Response Procedures

A2.7.7. Unscheduled/Unauthorized Aircraft Arrivals

A2.7.8. Distinguished Visitor Notification Procedures

A2.7.9. Dangerous/Hazardous Cargo

A2.7.10. Night Vision Device (NVD) Operations

A2.7.11. Local Aircraft Priorities

A2.7.12. Lost Communications Instructions

A2.7.13. Standard Climb-Out Instructions

A2.7.14. Opposite Direction Take-Offs and Landings

A2.7.15. Breakout/Go Around/Missed Approach Procedures

A2.7.16. Civilian Aircraft Operations

A2.7.17. Civil Use of Military ATCALS

A2.7.18. Aero Club Operations

A2.7.19. Weather Dissemination and Coordination Procedures: Hazardous/Severe Weather Notification Procedures; Lightning Response

A2.7.20. Airfield Snow Removal Operations

A2.7.21. Bird/Wildlife Control: Local Bird/Aircraft Strike Hazard (BASH) Program Guidelines

A2.7.21.1. **(Added-AFGSC)** Identify AO involvement/responsibilities for airfield bird/wildlife control **(T-2).**

A2.7.22. Bird Watch Conditions: Locally established Bird Watch Conditions (BWC)

A2.7.23. Supervisor of Flying (SOF) Operating in the Tower

A2.7.24. Airfield Photography

A2.7.25. Tactical Arrival/Departure Procedures

A2.7.26. UAS Operations Procedures

A2.7.26.1. Arresting Gear

Attachment 3

MANDATORY AIRFIELD OPERATIONS BOARD (AOB) BRIEFING ITEMS

A3.1. Distribute the agenda to board membership prior to the scheduled meeting, so attendees have time to prepare for their particular discussion items. Indicate the base-level OPR for each discussion item on the agenda.

A3.2. The following items shall be briefed quarterly:

A3.2.1. Airspace (terminal, enroute, and special use airspace).

A3.2.2. ATC/Flying Procedures (new, revised, rescinded and seldom used).

A3.2.3. Military, FAA, or Host Nation concerns.

A3.2.4. Airfield Operations Flight (AOF Staff, AM, and ATC) Staffing. Report airfield operations staffing as: Authorized, assigned, and available by AOF Staff and facility (e.g., Tower, RAPCON/GCA/RFC, and AMOPS section). Report unqualified apprentice ATC/AM personnel in overall numbers. Consider personnel as unavailable when they are on long term DNIC status, suspended, deployed, pending withdrawal, separating, or PCS, and those personnel TDY (more than 2 weeks), assigned or detailed outside their primary AFSC longer than 30 days.

A3.2.5. ATCALS (flight inspection schedule, ATCALS equipment findings, status, upgrades, etc.).

A3.2.6. Airfield Environment: Review airfield activities, construction projects, and programs. Number and status of permanent/temporary airfield waivers, and the status of deteriorating airfield/runway conditions.

A3.2.6. **(AFGSC)** Airfield Environment: Review airfield activities, construction projects, and programs. Number and status of permanent/temporary airfield waivers, and the status of deteriorating airfield/runway conditions. Also include the status of annual airfield certification/safety inspection and joint airfield inspection (i.e. last scheduled/next scheduled) **https://svy.cfigroup.com/launch/FSAS (T-2).**

A3.2.7. ATSEP Open Items. Address status of open ATSEP observations/problems and special interest items and if applicable, recommended closures. Identify the number of open ATSEP observations and number closed since last ATSEP (Group by category: AM, ATC, ATCALS, etc.).

A3.2.7.1. ATSEP observations/problems. Include the current status of all observations in the minutes until formally closed. Annotate IAW paragraph 4.3., Note 1.

A3.2.8. Status of Airfield Driving Training Program.

A3.2.8.1. Units visited and results of inspection

A3.2.8.2. Units scheduled for the upcoming quarter

A3.2.8.2. **(AFGSC)** Must specify which particular units are scheduled **(T-2).**

A3.2.8.3. Number of spot-checks performed and results

A3.2.8.4. Changes or findings with accomplishing airfield driver training

A3.2.8.5. Other issues as appropriate.

A3.2.8.5.1. **(Added-AFGSC)** Status of Air Force Runway Safety Action Team (RSAT) findings and corrective actions.

A3.2.9. Runway intrusions/Controlled Movement Area Violations (CMAVs): All CMAVs, including HATRs, regardless of impact on flight safety, must be briefed and documented in the AOB minutes. Provide a detailed description of each incident to include (who, what, when, where and how, type vehicle/aircraft involved and action taken to prevent a reoccurrence). Highlight any trends. Compare current and past year's number of runway intrusions by quarter.

A3.2.10. HATRs. Provide a brief summary of (Airfield operations related) HATRs reported in the period preceding the current AOB being conducted.

A3.3. The following items shall be briefed at least annually:

A3.3.1. LOP Review. Review the listing and effective dates of LOPs affecting the local airfield/flight environment (AOI, LOAs, operations letters, OPLAN taskings as applicable to the airfield environment, host nation agreements, etc.).

A3.3.2. TERPS. Conduct reviews of all instrument procedures to validate the continuing need for each. In addition to the annual requirement, review procedures when changes occur.

A3.3.3. Air Installation Compatible Use Zone (AICUZ). (Optional item). The AOB provides an optimal forum for conducting a review of the local AICUZ Program, as required by AFI 32-7063, *Air Installation Compatible Use Zone Program*.

A3.3.4. Results of annual self-inspection.

A3.3.5. Special Interest Items (SII). Report the results of new AF and/or MAJCOM SII checklists, including SIIs carried over from the previous year, at the first AOB following the official release of the SII checklist.

A3.3.6. Results of the Annual Airfield Certification/Safety Inspection and Quarterly Joint Inspection (as required).

A3.3.7. Aircraft Parking Plan: Review annually or as required.

A3.3.8. Status of existing airfield waivers with emphasis on temporary waivers and associated correction plans IAW UFC 3-260-1, Section B1-2.2.1.1.

A3.3.9. **(Added-AFGSC)** Include airfield lighting waivers **(T-2).**

A3.3.10. **(Added-AFGSC)** Airfield projects (lighting, painting, construction, repairs, recurring maintenance). Project list should include title, project number, wing priority number, cost, source of funding, status, OPR, and estimated completion date **(T-2).**

Attachment 4

ORM CONSIDERATIONS FOR OPERATIONS WHEN ESSENTIAL SERVICES ARE NOT AVAILABLE

A4.1. Operational impacts.

A4.1.1. Cost/benefit of operating a controlled versus uncontrolled airfield.

A4.1.1.1. Diverting aircraft if not controlled.

A4.1.1.2. Utilizing PPR/other local processes to exercise control of arriving aircraft under uncontrolled situations.

A4.1.1.3. Telephone stand-by/on-call status options.

A4.1.2. How mishaps would affect "next day" USAF operations. **Note:** USAF must wait for NTSB to investigate civil aircraft accidents.

A4.1.3. Delay of routine runway maintenance tasks.

A4.1.4. Pattern restrictions (i.e. one-in, one-out; practice approaches, etc.)

A4.2. Security implications.

A4.2.1. Physical security.

A4.2.1.1. Airfield access and ground traffic control.

A4.2.1.2. Potential theft and sabotage/vandalism.

A4.2.2. Operational security: intelligence exploitation.

A4.3. Safety implications.

A4.3.1. Possible mishap potential increase.

A4.3.2. Uncontrolled taxi operations by operators unfamiliar with procedures and facilities.

A4.3.3. Possible mix of uncontrolled military and civil traffic.

A4.3.4. Potential for delay in fire, crash, medical or rescue responses.

A4.3.5. Potential for injury to maintenance personnel on the airfield.

A4.3.6. Public exposure to hazardous/dangerous activities.

A4.3.7. Increased potential for runway incursions.

A4.3.8. Procedures for conducting airfield inspections and checks IAW this AFI.

A4.4. Legal implications.

A4.4.1. Accountability for incidents and accidents.

A4.4.2. Liability for injury and damage.

A4.4.3. Distinguishing between authorized and unauthorized landings.

A4.5. Other areas.

A4.5.1. Procedures for operating airfield lighting, if applicable.

A4.5.2. Notification and radio communication procedures.

A4.5.3. Weather reporting procedures.

A4.5.4. Host nation consideration (as applicable).

A4.5.5. If approved, WG/CC will ensure that the following actions are taken.

A4.5.5.1. If implemented on a short term basis (30 days or less):

A4.5.5.1.1. Arriving aircraft shall coordinate their arrival for accountability/identification purposes.

A4.5.5.1.2. Issue pertinent NOTAMS.

A4.5.5.1.3. Coordinate provisions for airfield security.

A4.5.5.1.4. Coordinate emergency response procedures.

A4.5.5.2. If this is implemented on a long term basis (e.g., more than 30 days). Address the items in A4.5.5.1. in the AOI, Enroute Supplement, and AP-1 as appropriate.

Attachment 5

AOF TRAINING REVIEW BOARD BRIEFING ITEMS

A5.1. Indoctrination Process. Identify all individuals involved in base, squadron, and facility indoctrination programs to include the estimated completion dates. Identify the status of the initial evaluation to include any items found deficient and the method used to report the deficiency.

A5.2. Five-Skill Level Upgrade Training. Identify all apprentice personnel involved in upgrade training. Information shall include training start dates, position of training, certifications obtained, UTG issue date with estimated completion date (AM only), training calendar days remaining in the position and status of trainee progression, and estimated completion date.

A5.3. Seven-Skill Level Upgrade Training. Identify all journeyman personnel involved in upgrade training. Information shall include status of trainee progression (e.g., 7-level course status, PCG status) and project completion.

A5.4. Qualification Training. Identify all personnel involved in position and management training, to include AFM, AOSS, NAAM and TERPS. Information will include position certifications obtained, current training position, training calendar days remaining and status of training progression.

A5.5. Controller Proficiency. Identify controller proficiency on all rated personnel (including staff).

A5.6. Status of Trainees in Other Categories. Identify personnel experiencing difficulty in training (EDIT), stop training, suspensions, withdrawals and assigned personnel working outside of the career field. Identify the reason for the category and corrective actions being taken, where applicable.

A5.7. Automated Training Programs. Identify the status of ATC Simulation Equipment, AFFSA ATC Operations, Procedures and Training CoP, and other computer based delivery systems. Information shall include availability of the system, down time, findings/deficiencies, hours of usage and new programs, if available.

A5.8. AF IMT 623a Status. Discuss the results of monthly training record reviews. Report discrepancy and documentation trends.

A5.9. ATC Non-radar Training Program. Identify the status of the non-radar training program to include non-radar proficiency training, development of new non-radar simulator scenarios, new procedures affecting non-radar training and any adverse trends in non-radar operations.

A5.10. Status of Facility Training Programs. Identify any regulatory changes received from higher headquarters, certification guide development and implementation and feedback received from flight personnel. Discuss any proposed changes necessary to improve the training program. This agenda item allows each member of the board to discuss the quality of training products, professional development and outstanding practices.

A5.11. Quality Assurance. The NSE and NAMO will identify the quality of service provided to aircraft and other customers. Information will include, where applicable, the results of facility

crew evaluations, aircrew surveys, position certifications, monthly proficiency test/trend analysis, and certification tests and other information garnered during the reporting period.

A5.12. Open Items. Identify all items that were carried over from the previous month's board for corrective measures. Include the open item, point of contact, plan of action, estimated completion date and whether the item is closed or open for the next board meeting

Attachment 6

ATCALS REVIEW BOARD

A6.1. ATCALS Review Board. A board that will convene semi-annually, to discuss and make recommendations concerning various ATCALS, ATC and AM programs, projects, and issues. The meeting should include discussing new agenda items and reviewing previous items, as required by the chairperson.

A6.1.1. Agenda. Show open, closed items, and estimated completion dates where applicable. Recommended areas to address:

A6.1.1.1. Facilities commissioned or decommissioned.

A6.1.1.2. Repair schedules (for example, depot, on-site Mobile Depot Maintenance (MDM).

A6.1.1.3. Active and proposed communications-computer projects.

A6.1.1.4. Modification programs and schedules.

A6.1.1.5. Allied support status for ATCALS installations.

A6.1.1.6. Special problem facilities or areas (to include airfield lighting).

A6.1.1.7. Funding issues.

A6.1.1.8. National Airspace System Plan and associated ATCALS issues.

A6.1.1.9. Status of implementation programs.

A6.1.1.10. AM technology procurement, funding and installation schedules.

A6.2. ATCALS Review Board Minutes. Signed by chairperson and approved by the MAJCOM OPR for AO or designated alternate authority. Accomplish ATCALS Review Board minutes by letter. MAJCOMs will send one copy of combined unit review board minutes to HQ AFFSA A3/8, 38 EIS/XP, FAA/AAT-5 (liaison officer), FAA/AVN-8, NGB/SC. MAJCOMs determine additional distribution.

A6.3. Membership.

A6.3.1. MAJCOMs determine ATCALS Review Board membership. The following are recommendations:

A6.3.1.1. MAJCOM OPR for AO (Chairperson).

A6.3.1.2. ATCALS system managers.

A6.3.1.3. Civil engineering.

A6.3.1.4. Plans and programs.

A6.3.1.5. Logistics.

A6.3.1.6. Current operations.

A6.3.1.7. Airfield Management.

A6.3.1.8. Other representatives as deemed necessary.

A6.3.2. ATCALS Review Board membership will consist of division chiefs or their designated representatives from:

A6.3.2.1. ATC Operations and Procedures.

A6.3.2.2. ATC ATCALS Resources.

A6.3.2.3. Command and Control Requirements Division.

A6.3.2.4. ATCALS Surveillance Systems Division.

A6.3.2.5. Civil Engineering Program Division.

A6.3.2.6. DO Financial Management Division.

A6.3.2.7. Programs Division.

A6.3.2.8. Other MAJCOM Divisions as required.

A6.4. If the MAJCOM requires units to conduct ATCALS Review Boards, the MAJCOM will also determine membership requirements.

Attachment 7

ATC NEWCOMER'S INDOCTRINATION PROGRAM

A7.1. PURPOSE: This attachment is designed to assist air traffic control managers in developing an indoctrination program for newly assigned personnel. The goal is to orient controllers with their new duty location. Newly assigned air traffic controllers, whether apprentice or journeyman must be able to relate to the personnel and facilities they must work with on a day-to-day basis. Managers can provide this information through a thorough and comprehensive indoctrination program. A well-organized program must have a strong positive effect on the new arrival. ATC Indoctrination Program must be completed within 30 days of assignment. This indoctrination checklist must be maintained IAW AFI 36-2201, paragraph 6.7.1.13.

A7.2. OVERVIEW: An indoctrination program should fulfill the needs of the individual, as well as the ATC mission. Needs must vary depending on unit of assignment. Facilities and personnel visited, content and depth of briefings should vary depending on the new arrival's experience and duty position. Make sure program is tailored to fit these needs.

A7.3. MANAGEMENT: The reporting official/rater and each member of the management team (Airfield Operations Flight Commander (AOF/CC), Chief Controller (CCTLR), NCOIC, Air Traffic Control Training (NATCT), NCOIC, ATC Standardization and Evaluation (NSE), and Watch Supervisors (WS)) must accomplish their portion of an indoctrination checklist when briefing new personnel. It is very important that the new arrival be briefed on mission, training requirements, duty schedules, etc. Each briefing should be presented by the individual most directly responsible for a given area. The briefing given by the below individuals must cover, but is not limited to, the following:

A7.3.1. Reporting Official/Rater.

A7.3.1.1. Conduct controller initial evaluation.

A7.3.2. AOF/CC.

A7.3.2.1. The overall ATC and unit mission and where the new arrival "fits in".

A7.3.2.2. Medical qualification and procedures.

A7.3.2.3. Awards and Decorations Programs.

A7.3.2.4. Controller recognition program.

A7.3.2.5. Squadron participation/support.

A7.3.2.6. Off-duty employment.

A7.3.2.7. EPR endorsements.

A7.3.2.8. Leave policy.

A7.3.2.9. Drugs and alcohol abuse policy/programs.

A7.3.2.10. Chain of Command.

A7.3.2.11. Unit AEF/Tempo Banding

A7.3.3. CCTLR

A7.3.3.1. Duty schedule.

A7.3.3.2. Uniform policy.

A7.3.3.3. Additional duties.

A7.3.3.4. Facility operations, standards and policies.

A7.3.3.5. Explain facility training standards and rating expectations.

A7.3.3.6. Medical procedures, to include blood donation, immunizations, sick call and Duties Not to Include Controlling (DNIC).

A7.3.3.7. Personal responsibilities (financial, military, grooming).

A7.3.3.8. Points of contact and telephone numbers.

A7.3.3.9. Operating initials.

A7.3.3.10. Crew Assignment.

A7.3.3.11. Add to/issue recall roster.

A7.3.3.12. Off-duty education opportunities/policy.

A7.3.3.13. Review supervisor-conducted initial evaluation and determine where individual will start training.

A7.3.4. NATCT.

A7.3.4.1. The Training Program, to include FLT and path from apprentice to journeyman.

A7.3.4.2. Trainee/trainer/supervisor responsibilities.

A7.3.4.3. Normal and maximum training time limits.

A7.3.4.4. Training evaluations.

A7.3.4.5. Initial qualification and recurring training requirements.

A7.3.4.6. Demonstrate basic AFFSA ATC Operations and Training CoP access.

A7.3.4.7. Enter trainee information into database, as applicable.

A7.3.4.8. Collect the Airman Written Test Report from trainee and insert into records, if applicable.

A7.3.4.9. Collect the AETC Form 156, Student Training Report from the UTM and safeguard as applicable.

A7.3.4.10. Review AF Form 623 and add local products.

A7.3.4.11. All controllers are required to become a member of the ATC Operations, Procedures & Training CoP.

A7.3.5. NSE.

A7.3.5.1. Facility certification process.

A7.3.5.2. Periodic Facility, Special, Annual and Controller Evaluations.

A7.3.5.3. Facility testing policy.

A7.3.6. WS.

A7.3.6.1. Crew procedures

A7.3.6.2. Equipment.

A7.3.6.3. Crew Policies.

A7.3.6.4. Review duty hours.

A7.4. TOURS AND VISITS. It is beneficial for new arrivals to visit other facilities and agencies in the area and meet the people they must be working with. Newly assigned personnel should receive a briefing on how these operations interface with the ATC mission and what they do. Again, the amount of time spent at each facility, personnel contacted and depth of the briefings may vary depending on the new controller's experience and duty position.

A7.5. OTHER ATC FACILITIES. Each individual must visit all air traffic control facilities located at the installation. Be sure to include, if possible, nearby FAA or host nation air traffic control facilities in the indoctrination.

A7.6. SUPPORT FACILITIES. Several non-ATC facilities support the air traffic control mission. Day-to-day operations are affected through dealings with these agencies. As a minimum, the indoctrination program should include these agencies, but is not limited to:

A7.6.1. Weather Station. Provides information vital to ATC; and vice-versa. An insight into the overlapping responsibilities is beneficial when combined with some background of local meteorological phenomena. Request briefing on Weather/ATC Cooperative Weather Watch Program and Limited Weather Observation Criteria/Tower Visibility Training. **Note**: Initial Limited Weather Observation training will be documented on AF IMT 3622 and is signed off by a designated weather examiner.

A7.6.2. Airfield Management Operations. Every airport layout has its peculiarities. Have airfield management personnel take the new individual on a tour of the airfield and point out areas where problems often arise.

A7.6.3. Command Post/Center. This is the focal point for all installation activities. A visit here must put things into an installation wide perspective and show the new controller how ATC information plays an integral part in wing command and control.

A7.6.4. Crash Control. Agency is the focal point for emergency responses.

A7.6.5. Transient Alert. Tower controller's work directly with this agency and a visit here must be more beneficial for personnel assigned to tower.

A7.6.6. Barrier Maintenance. Background information and actually seeing the barriers, must make barrier training more meaningful.

A7.6.7. Runway Control Structures. All tower assigned controllers should visit this facility, if applicable, to develop insight into the level of involvement of the RCS officer and their working environment.

A7.6.8. ATCALS Sites. All sites associated with ATC must be included in this tour.

A7.7. ATC MEETINGS. These are normally reserved for 7-levels and staff personnel. This will help them develop an understanding of how airfield operations management fits into other components of the unit and base. Include ATCALS Review Board meetings, Airfield Operations Board (AOB) and the maintenance/job control briefing.

A7.8. LOCAL FLYING ORGANIZATIONS. This will enable the controller to see how they function and how ATC interfaces with the flying community. If different organizations exist, visit them all. Fighter, cargo, and training pilots all have different operational needs. This will also enhance pilot/controller relations through a better understanding of the functions performed. Don't forget to include the local Aero Club if applicable.

Attachment 8

AM NEWCOMER'S INDOCTRINATION PROGRAM

A8.1. PURPOSE. This attachment is designed to assist the NAMT in developing a Newcomer's Indoctrination Program for newly assigned personnel. The goal of the Newcomer's Indoctrination Program is to provide newly assigned personnel a work center orientation as outlined in AFI 36- 2201. The Newcomer's Indoctrination Program must be completed within 60 days of assignment (120 days for Air Reserve Component) (T-3). Maintain a copy of the completed Newcomer's Indoctrination Program in Tab F of the individual's training record and retain until they PCS or PCA. (T-3)

A8.2. OVERVIEW. The Newcomer's Indoctrination Program should fulfill the needs of the individual, as well as the AM mission. Needs must vary depending on unit of assignment. Facilities and personnel visited, content and depth of briefings should vary based on the newly assigned individual's experience and duty position. Make sure program is tailored to fit these needs. (T-3)

A8.3. MANAGEMENT. The AOF/CC, AFM, NAMO, NAMT and Supervisors/Trainers or DoD Civilian equivalents must develop comprehensive checklists to brief newly assigned personnel. Areas to brief include but are not limited to: (T-3)

A8.3.1. AOF/CC.

A8.3.1.1. The overall AM and unit mission and where the new arrival "fits in".

A8.3.1.2. Awards and Decorations Programs.

A8.3.1.3. Flight recognition program.

A8.3.1.4. Squadron participation/support.

A8.3.1.5. Off-duty employment.

A8.3.1.6. Enlisted Performance Reports/Civilian Appraisals.

A8.3.1.7. Leave policy.

A8.3.1.8. Drugs and alcohol abuse policy/programs.

A8.3.1.9. Chain of Command.

A8.3.1.10. Unit AEF/Tempo Banding.

A8.3.2. Airfield Manager.

A8.3.2.1. Airfield Tour and Familiarization.

A8.3.2.2. Facility operations, standards and policies.

A8.3.3. NAMO.

A8.3.3.1. Duty schedule (e.g., Duty hours and shifts, including periods of rest (non-duty time).

A8.3.3.2. Uniform policy.

A8.3.3.3. Additional duties.

A8.3.3.4. Safety requirements found on the AF Form 55, *Employee Safety and Health Record*.

A8.3.3.5. Medical/sick call.

A8.3.3.6. Personal responsibilities (financial, military, grooming).

A8.3.3.7. Points of contact and telephone numbers.

A8.3.3.8. Operating initials.

A8.3.3.9. Shift assignment.

A8.3.3.10. Add to/issue recall roster.

A8.3.3.11. Off-duty education opportunities/policy.

A8.3.4. NAMT.

A8.3.4.1. Explain facility training program.

A8.3.4.2. Responsibilities of trainee, trainer, task certifier, and supervisor.

A8.3.4.3. All time (normal and maximum) and training requirements for upgrade and/or local qualification training.

A8.3.4.4. Training evaluations.

A8.3.4.5. Local qualification, recurring and proficiency training requirements.

A8.3.4.6. Review/Create AF Form 623 and add local products.

A8.3.5. Supervisor/Trainer.

A8.3.5.1. What the trainee will be doing.

A8.3.5.2. Conduct Initial Evaluation. (Supervisor)

A8.3.5.3. Shift policy and procedures.

A8.3.5.4. Equipment.

A8.3.5.5. Review duty hours.

A8.4. TOURS AND VISITS. It is beneficial for newly assigned personnel to visit other facilities and agencies to meet the people they will be working with and receive a briefing on how these operations interface with AM. (T-3) The amount of time spent at each facility, personnel contacted and depth of the briefings may vary depending on the individual's experience and duty position. As a minimum, accomplish tours and/or visits of the following areas:

A8.4.1. Tower.

A8.4.2. RAPCON or GCA facility.

A8.4.3. Transient Alert.

A8.4.4. Weather.

A8.4.5. Fire Department.

A8.4.6. Wing Safety.

A8.4.7. Command Post.

A8.4.8. Protocol.

A8.4.9. Maintenance Operations Coordination Center.

A8.4.10. Civil Engineers.

A8.4.11. Security Forces/Law Enforcement Desk.

A8.4.12. Local Flying Units.

A8.4.13. Transportation.

Attachment 9

TRAINING RECORDS INSPECTION CHECKLIST

TRAINING RECORD INSPECTION CHECKLIST

Individual Name	Inspection Date	Unit:	Y = Yes, N = NO, Remarks required N/A= Not Applicable		
			Y	N	N/A
Section 1. AF Form 623, Individual Training Record Cover. Reference: AFI 36-2201					
Part I (Identification Data)					
1.1. Is the individual's name, grade and DAFSC, Civilian Job Series correctly annotated? *For AFTR users, review AF Form 623 Part I section.*					
1.2. Is the record signed and dated? *For AFTR users, review AF Form 623 Part I section.*					
Part II (ECI/UTG Participation)					
1.3. Are all course numbers and titles attended annotated? *N/A for AFTR users.*					
1.4. Is the number of volumes completed and date annotated? *N/A for AFTR users.*					
1.5. Are PCG completions documented (e.g., short title and date)? *For AFTR users, document in the AF Form 623a section.*					
Part III (Formal Training)					
1.6. Are technical school titles and course numbers annotated? *For AFTR users, review AF Form 623 Part III section.*					
1.7. Has the individual attended PME, if so, is it annotated? *For AFTR users, review AF Form 623 Part III section.*					
1.8. Is the individual trainer qualified, if so, is the trainer course annotated? *For AFTR users, review AF Form 623 Part III section.*					
1.9. Is the individual certifier qualified, if so is the certifier course annotated? *For AFTR users, review AF Form 623 Part III section.*					

Section 2. AF IMT 623a, *On the Job Training Record Continuation Sheet.* REFERENCE: AFI 36-2201, AFI 13-204v3, Chapter 19			
2.1. Is there an initial evaluation maintained in Tab F until the individual PCS or PCA? *For AFTR users, maintain evaluation in the Uploaded User Files Section.*			
2.2. Has an evaluation of Apprentice Course Graduates been conducted and documented during the first 90 days following assignment? *For AFTR users, maintain evaluation in the Uploaded User Files Section.*			
2.3. If records were transcribed in the STS portion, is the reason documented?			
2.4. Is the individual name entered at the bottom of each page? *N/A for AFTR users.*			
2.5. If individual training deficiencies are identified, are corrective actions/steps taken documented?			

2.6. Are all entries signed by the supervisor/trainer and trainee? *For AFTR users, are entries signed by the user and administrator?*	☐	☐	☐
2.7. Are recurring entries (e.g., monthly for upgrade/qualification) documented?	☐	☐	☐
2.8. Are breaks in training (e.g., TDY's, Deployments, Leaves, Hospitalizations, etc.) documented?	☐	☐	☐
2.9. Are training record inspections documented?	☐	☐	☐

Section 3. AF IMT 1098, *Special Task Certification and Recurring Training.* REFERENCE: AFI 36-2201, AFI 13-204v3, Chapter 19			
3.1. Are previous year 1098's maintained in records? *For AFTR users, scan and upload in the Uploaded User Files Section.*	☐	☐	☐
3.2. Is monthly proficiency training documented?	☐	☐	☐
3.3. Is mobility training documented?	☐	☐	☐
3.4. Has trainee initialed training completion (column D)? *For AFTR users, has the trainee signed the "Trainee" column?*	☐	☐	☐
3.5. Is score/hours documented (column E)? *For AFTR users, has the score/hours been documented in the "Score or Hours" column?*	☐	☐	☐
3.6. Is the training frequency documented for all training items (column G)? *For AFTR users, has the frequency been documented in the "Frequency" column?*	☐	☐	☐
3.7. Is type of training conducted (column F)? *For AFTR users, has the type of training been documented in the "Type" column?*	☐	☐	☐
3.8. Are the name, grade and unit/office symbol blocks completed? *N/A for AFTR users.*	☐	☐	☐
3.9. Are all recurring training requirements documented?	☐	☐	☐

Section 4. Career Field Education and Training Plan (CFETP). REFERENCE: AFI 36-2201, AFI 13-204v3, Chapter 19			
4.1. Are the trainees' name, initials and SSN (last 4) blocks completed in the Identification Block? *N/A for AFTR users.*	☐	☐	☐
4.2. Are all trainers, and certifiers' names printed and contain initials on the Identification Block? *N/A for AFTR users.*	☐	☐	☐
4.3. Are trainers and certifying officials that are no longer used in STS lined out on the Identification Block? *N/A for AFTR users.*	☐	☐	☐
4.4. Are all duty position tasks identified and circled in pencil on the STS? Do they match the Master Task Listing (MTL)? *For AFTR users, are all local required training items identified in the Duty Task List (DTL)?*	☐	☐	☐
4.5. Are all core task items trained before an individual is upgraded?	☐	☐	☐
4.6. Are all current changes to the CFETP posted? *N/A for AFTR users, CFETP changes will be updated in AFTR.* No unit action required for updates.	☐	☐	☐

Section 5. AF IMT 803, *Report of Task Evaluations.* REFERENCE: AFI 36-2201, AFI 13-204v3, Chapter 19			
5.1. Is the individual's name, grade and AFSC documented? *N/A for AFTR users.*	☐	☐	☐
5.2. Is the UGT block completed?	☐	☐	☐
5.3. Is the evaluator block dated, with name typed or printed and signed?	☐	☐	☐
5.4. Are results (sat/unsat) documented?	☐	☐	☐
5.5. If an item is unsat, is the reason specified, and corrective actions required documented?	☐	☐	☐

Section 6. AF IMT 797, *Job Qualification Standard Continuation/Command JQS Sheet.* REFERENCE: AFI 36-2201, AFI 13-204v3, Chapter 19			
6.1. Are all local duty position tasks identified? Do they match the Master Task Listing (MTL)?	☐	☐	☐
6.2. Is the current edition used?	☐	☐	☐
6.3. Are training dates (start, completion) documented?	☐	☐	☐
6.4. Are trainer, trainee and certifier initials documented?	☐	☐	☐
6.5. Is trainee name block completed? *N/A for AFTR users.*	☐	☐	☐

Section 7. Training Record Format. REFERENCE: AFI 13-204v3, Chapter 19. This section *N/A for AFTR users. AFTR will automatically format the record.*			
7.1. Does TAB A contain a current 1C7X1 CFETP and published changes?	☐	☐	☐
7.2. Does TAB B contain a current AM PCG or AF IMT 623a stating the individual's current duty position?	☐	☐	☐
7.3. Does Tab C contain current and accurate AF IMT 797 identifying local qualification tasks?	☐	☐	☐
7.4. Does Tab D contain AF IMT 803s (e.g., Local PCG Evaluations, 1C7X1 CFETS STS Core Task Evaluations, Apprentice Course Graduates Evaluations, etc.)?	☐	☐	☐
7.5. Does TAB E contain current and accurate AF IMT 1098s (e.g., Proficiency Training, Mobility Training, Recurring Training, etc.)?	☐	☐	☐
7.6. Does Tab F contain the AF IMT 623a?	☐	☐	☐
7.7. Does Tab G contain miscellaneous documents (e.g., AF IMT 2096, Classification/ On-The-Job Training Action, training certificates from formal/online and CBTs)?	☐	☐	☐

Section 8. Local Training Program. REFERENCE: Local AM Training Operating Instruction.			
	☐	☐	☐
	☐	☐	☐
Discrepancies Noted:			
Corrective Action:			

Date:	Trainee: (Name, Rank)	Signature:
Date:	Supervisor/Trainer: (Name, Rank)	Signature:
Date:	NAMT: (Name, Rank)	Signature:

Attachment 10

SAMPLE AIRFIELD INSPECTION AND CHECK FORM

AIRFIELD INSPECTION AND CHECK FORM			DATE
SECTION I AIRFIELD INSPECTION	INSPECTOR		TIME
1. **OBSTACLE CLEARANCE CRITERIA** (e.g. tree growth vegetation, dirt/snow piles, ponding, construction, depressions, mobile/fixed obstacles, etc.)	3. **SIGNS** (e.g. broken, missing, correct background and legend colors, easy to read, not obscured by vegetation, dirt or snow, frangible mounted and illuminated if required for night operations, etc.) **MARKINGS** (e.g. peeling, chipping, fading and obscurity due to rubber buildup, etc.)	6. **PAVEMENT CONDITIONS** (e.g. scaling, spalling, cracks, holes, surface variations such as bumps/low spots, rubber deposits and vegetation growth, etc.)	
	a. VFR HOLDING POSITIONS		
	b. INSTRUMENT HOLDING POSITIONS	a. RUNWAY/OVERRUNS 17R/35L	
a. RWY CLEAR ZONES 3000X3000 FT	c. ELEVATION SIGNS	b. RUNWAY/OVERRUNS 17L/35R	
b. RWY LAT CLEARANCE 1000 FT CENTERLINE	d. NAVAID GROUND RECEIVER CHECKPOINTS	c. RUNWAY/OVERRUNS 17A/35A	
c. TWY LAT CLEARANCE 200 FT CENTERLINE	e. CLOSED AREAS	d. TAXIWAYS	
d. APRON LAT CLEARANCE VARIABLE		e. PARKING APRONS	
e. CONSTRUCTION AREAS	4. **RWY/TWY/APRON SHOULDERS**	f. ACCESS ROADS	
f. PERIMETER/ACCESS ROADS	a. RWY 200 FT		
g. TRANSITION SLOPE (7:1)	b. TWY 50 FT	7. **HABITAT MANAGEMENT**	
	c. APRON 50 FT	a. GRASS HEIGHT	
2. **FOD Control**		b. PONDING EFFECTS	
a. Runways/Overruns, Taxiways/Shoulders	5. **CONSTRUCTION**	c. BIRD/ANIMAL SURVEY	
b. Parking Aprons	a. PARKING	d. BASH CONDITION:	
c. Infield areas between Runways/Taxiways	b. RULES COMPLIANCE	LOW MOD SEVERE	
d. Perimeter/Access Roads	c. SITE LIGHTING/MARKING		
	d. STORAGE e. VEHICLES LIGHTED/MARKED	8. **ARRESTING GEAR** (e.g. loose cable, donut spacing. Broken ties, barrier pad deterioration) a. Bak 12	
	f. FOD CONTROL	b. E-5	

SECTION II AIRFIELD CHECKS			
ITEM NO	TIME	INSPECTOR	TYPE REMARKS

SECTION III LIGHTING CHECK	INSPECTOR			TIME
1. 17R/35L RWY EDGE LIGHTS	10. 17L ALS	19. TWY "F"	28. TWY "E2"	
2. 17A/35A EDGE LIGHTS	11. 17L PAPI	20. TWY "G"	29. TWY "E1"	
3. 17L/35R RWY EDGE LIGHTS	12. 17L THRESHOLD	21. TWY "K1"	30. TWY "D"	
4. 17R ALS	13. 35R ALS	22. TWY "H"	31. SPOT 1 – 8	
5. 17R VASI	14. 35R PAPI	23. TWY "J"	32. OBSTR LIGHTS	
6. 17R THRESHOLD	15. 35R THRESHOLD	24. TWY "K2"	33. ROTATING BEACON	
7. 35L ALS 8. 35L VASI	16. 17R/35L DRM 17. 17L/35R DRM	25. TWY "K3" 26. TWY "L"	34. WIND CONES 35. NAVAID CHECKPOINTS	
9. 35L THRESHOLD	18. TWY "C"	27. TWY "M"	36. APRON LIGHTS	

ITEM NO	DISCREPANCY	REPORTED TO: NAME /AGENCY	WORK ORDER NUMBER	DATE/TIME	FOLLOW UP	COMPLETED

INSTRUCTIONS: DISCREPANCIES NOT CORRECTED WILL BE ADDED ON THE WORK ORDER LOG OR AF FORM 332. MARK DISCREPANCY LOCATION ON THE AIRFIELD DIAGRAM	AFM	DAFM	NAMO

Attachment 11

AIRFIELD LIGHTING CHART

No.	Lighting System	Component Types	Allowable Outages	Notes:
APPROACH LIGHTING SYSTEMS				
1.	**ALSF –1 with Sequence Flashing Lights (SFL)**			
a.		Overall System	15% lamps out (random) – 2 lamps out; in 5-light bar – 1 light bar out	1, 2, 3, 4
b.		Centerline bars	2 lamps out in 5 lamp bar	1
c.		Pre-Threshold bar	2 lamps out	1
d.		Threshold bar	5 lamps out	1
e.		Terminating bar	2 lamps out	1
f.		1000-foot bar	5 lamps out	1
2.	**ALSF – 2 with SFLs**			
a.		Overall System	15% lamps out (random) – 2 lamps out; in 5-light bar - light bar out	1, 2, 3, 4
b.		Centerline bar inner 1500ft	2 consecutive light bars out, 20% random lamps out	1
c.		Centerline bar outer 1500ft	2 consecutive light bars out, 20% random lamps out	1
d.		Centerline bar	2 lamps out in 5 lamp bar	1
e.		Side row bars	2 consecutive light bars out, 20% random lamps out	1
f.		Side row	1 lamp out in 3 lamp bar	1
g.		Threshold bar	3 adjacent lamps out, 20% random lamps out	1
h.		500-foot bar	3 adjacent lamps out, 20 % random lamps out	1
i.		1,000-foot bar	3 adjacent lamps out, 20% random lamps out	1
No.	**Lighting System**	**Component Types**	**Allowable Outages**	**Notes:**

3.	**MALSR, SALS and SSALR**			
a.		Overall system	15% lamps out (random), 2 lamps out; in 5 light bar - 1 light bar out	1, 2, 3, 4
b.		5-lamp bar	2 lamps out	1
c.		Threshold bar (where existing)	3 lamps out	1
d.		1000-foot bar	3 lamps out	1
e.		Terminating bar	2 lamps out	1
f.		Centerline bars	2 lamps out in 5 lamp bar	1
4.	**ODALS and LDIN Lights**			
a.		Omni directional ALS	1 unit out	1, 2, 3, 4
b.		Lead-In Lights	1 lamp out in 3 lamp group	1, 2,
VISUAL GLIDE SLOPE INDICATOR				
5.	**VASI, PAPI and PVASI Lamps**			
a.		Visual Approach Slope Indicator (VASI), Precision Approach Path Indicator (PAPI)	1 lamp out in a 3 light box and no lights out for a 2 light box.	1, 2, 3
b.		Pulsed Visual Approach Slope Indicator (PVASI)	None	1, 2, 3
RUNWAY END IDENTIFIER LIGHTS				
6.	**REIL**	Operational	None	1, 2, 3, 4
OBSTRUCTION LIGHTS				
7.	**Fixed**	Operational	None	1, 2
RUNWAY/TAXIWAY SYSTEMS AND AIRFIELD BEACONS				
8.	**Runway**			
a.		Threshold lights	25% lights out	1, 2, 3, 4 **Note:** 25% lights out is for VFR or non-precision IFR runways). For precision runways use Approach Lighting System allowable

				outage.
No.	**Lighting System**	**Component Types**	**Allowable Outages**	**Notes:**
b.		End Lights	25% random lights out	1, 2, 3 **Exception*:*** Do not turn off lights if they are collocated (same fixtures) with the opposite end threshold lights)
c.		Edge Lights	15% random lights out	1, 2, 3, 4, 6
d.		Edge Lights Cat II and III	5% random lights out	1, 2, 3, 4, 6
e.		Centerline Lights	5% lights out	1, 2, 3, 4
f.		Touchdown Zone (TDZL)	10% lights out	1, 2, 3, 4 **Note:** Two adjacent bars on the same side of the system shall not be inoperative. A bar is considered inoperative when all light are out.
g.		Sequence Flashing Lights	20%	1, 2, 3, 4
9.	**Taxiway**			
a.		Edge Lights	15% lights out	1, 2, 3, 7, 8 For CAT III - Taxiway edge lights, taxiway edge reflectors and taxiway centerline lights along low-visibility route – no two adjacent lights or reflectors unserviceable. Taxiway clearance bar lights – no more than one light at a location unserviceable.

No.	**Lighting System**	**Component Types**	**Allowable Outages**	**Notes:**
b.		Centerline Lights (Cat II)	10% lights out	1, 2, 3, 4, 6, 7 **Exception*:*** If 9a is in service for the

				same taxiway, disregard **Note: 6**). For CAT III - Taxiway edge lights, taxiway edge reflectors and taxiway centerline lights along low-visibility route – no two adjacent lights or reflectors unserviceable. Taxiway clearance bar lights – no more than one light at a location unserviceable.
c.		Elevated Runway Guard Lights	No more than one light in a fixture	1, 2, 3
d.		In-Pavement Runway Guard Lights	No more than 3 lights per location nor 2 adjacent unserviceable	1, 2, 3
e.		Runway Stop Bar Lights	No more than 3 lights per location nor 2 adjacent lights unserviceable.	1, 2, 3
10.	**Rotating Beacon**		None	1, 2
11.	**Runway Distance Markers (Lighted)**		None	1, 2

NOTES:

When allowable outages are exceeded, AM personnel must take the following actions:

1. Document and report outage to CE (Airfield Lighting) for correction.
2. Send a NOTAM according to AFI 11-208.
3. Turn off affected lighting system. Notify AOF/CC, OSS/CC, OG/CC (or equivalents) as necessary. **Note:** Installation Commander is the waiver authority for leaving the system on.
4. Notify TERPS to determine impact to instrument procedures.
5. Turn off REILs only when they are not connected with the opposite end threshold light.
6. Prohibit fixed-wing aircraft operations during night or low-visibility operations. (IAW AFI 11-202V3, the MAJCOM A3 may authorize night fixed-wing operations on an unlit runway.) This authority may be delegated no lower than the installation commander.
7. Reflectors and retro-reflective markers are allowed with a MAJCOM approved waiver. (UFC 3-535-01).
8. Installation Commander may authorize use of unlit taxiways for movement of base assigned aircraft with the aid of follow-me vehicles or ground support personnel.

Attachment 12

SAMPLE MEMORANDUM, SUSPENSION OF ATCS CERTIFICATE

MEMORANDUM FOR (Controller Concerned) (*date*)
FROM: (Unit Commander)
SUBJECT: ATCS Certificate Suspension (Pending Withdrawal)
1. Under the provisions of AFI 13-204v3, I suspend your ATCS certificate and restrict you from performing air traffic control duties. This suspension will remain in effect pending the results of the evaluation of your case. (*Insert a statement of substance of cause for suspension*.)
2. After receipt of the evaluation results, I may take action to withdraw your AFSC without further notice (military). If I, or the review authority, determines your withdrawal is for reasons within your control (for cause) it could result in an administrative discharge or termination of employment.
Note: If the controller is receiving an SRB, add the following statement: "If I, or the review authority, determine withdrawal was for cause, then I will initiate action to terminate and recoup your SRB."
3. You may consult with legal counsel and submit any written statement or documentary evidence to consider in evaluating this matter.
4. Acknowledge receipt of this memorandum by endorsement below within three workdays. Submit any statements or documents for consideration within ten workdays.
(Signature of Unit Commander)
1st Ind, (Controller) (*date*)
TO: (Unit Commander)
1. I acknowledge receipt of ATCS certificate suspension and pending withdrawal.
2. I have been afforded the opportunity of consulting with legal counsel regarding this action. I was counseled by (name), (grade and title, if military), (address, if civilian) / I declined legal counsel.
3. I do / do not desire to attach a statement in my own behalf.
4. I agree / disagree with the proposed action.
(Signature of Controller Concerned)
(Name, Grade,) USAF

Note: Controller will initial directly above the phrases lined out in their endorsement.

Attachment 13

SAMPLE MEMORANDUM, FEAR OF CONTROLLING (FOC) STATEMENT

MEMORANDUM FOR (Unit Commander)(*date*)
FROM: (Controller Concerned)
SUBJECT: Request for Withdrawal from ATC Duty For Fear of Controlling
1. IAW AFI 13-204v3, I hereby profess a fear of controlling (FOC) and voluntarily request permanent withdrawal from ATC duty. I understand if my FOC is not diagnosed as a medical disqualification by a military psychiatrist or psychologist and the (MAJCOM) Surgeon General, I may withdraw my statement and be returned to duty. If I persist with withdrawal from ATC duty, I am self-eliminating and my ATCS certificate will be withdrawn as a potential hazard to flight safety.
2. I submit the following information:
a. Resume of ATC experience.
b. Reason for requesting withdrawal is: I profess a fear of controlling and consider myself a hazard to flying safety.
(Explanation of reason)

(Signature of Controller Concerned)
(Name, Grade, USAF)

Attachment 14

AFSC WITHDRAWAL CHECKLIST FOR CONTROLLERS WHO FAIL TO OBTAIN ORMAINTAIN POSITION CERTIFICATION OR FACILITY RATING (FTOR)

A14.1. NameGradeDate Assigned

A14.2. Initial Withdrawal Actions:

A14.2.1. CCTLR will: (T-1)

A14.2.1.1. Stop controller training and document using AF Form 623a or suitable substitute and retain in AF Form 623.

A14.2.2. Commander will: (T-1)

A14.2.2.1. Issue an ATCS certificate suspension, pending withdrawal memorandum and address (Attachment 12):

A14.2.2.1.1. Whether withdrawal is “For Cause” or “Not for Cause”.

A14.2.2.1.2. One of the following statements regarding an SRB:

A14.2.2.1.2.1. Member did not receive an SRB.

A14.2.2.1.2.2. If an SRB was received include a recommendation whether or not to recoup and terminate SRB (followed by OSS/CC’s rationale).

A14.2.3. AOF/CC will: (T-1)

A14.2.3.1. Notify MAJCOM OPR for ATC of pending withdrawal action within 24 hours of controller ATCS certificate suspension and advise if it is “For Cause” or “Not for Cause”.

A14.3. Investigation actions:

A14.3.1. After initial removal from training, get statements from: (T-1)

A14.3.1.1. AOF/CC, outlining a synopsis of individual’s training. This statement may include inputs from the AOF/DO, CCTLR, NSE, and NATCT/TSN. Individual statements from other staff members are optional. The AOF/CC statement must include:

A14.3.1.1.1. Date controller entered training.

A14.3.1.1.2. Summary of actions taken to correct deficiencies.

A14.3.1.1.3. Stop training days.

A14.3.2. Immediate supervisor, outlining individual’s duty performance.

A14.3.3. If a physical condition could have impaired the ability of the controller to perform in a satisfactory manner, refer the controller to the base flight surgeon for an evaluation of medical qualification.

A14.4. Evaluation, Determination and Processing Actions:

A14.4.1. NATCT/TSN will compile the following information and provide to the MAJCOM OPR for ATC and Base Training Manager (BTM) for concurrence or non-concurrence within seven duty days of controller ATCS suspension: (T-1)

Note: If applicable, withdrawal documentation will be provided in electronic format and all Privacy Act information will be IAW AFI AFI 33-332, Privacy Act Program. (T-3)

A14.4.1.1. ATCS certification suspension letter.

A14.4.1.1.1. CCTLR AF Form 623a stop-training documentation.

A14.4.1.2. OSS/CC cover memorandum recommending AFSC withdrawal. Memorandum will include: (T-1)

A14.4.1.2.1. Course of action recommended.

A14.4.1.2.2. Response to allegations made by the controller who is recommended for withdrawal (if applicable).

A14.4.1.2.3. Any inconsistent data or recommendations in the ATC staff's supporting statements. (T-1)

A14.4.1.2.4. Any disciplinary or administrative actions taken or pending against the controller that support the withdrawal. (T-1)

A14.4.1.2.5. One of the following statements

A14.4.1.2.5.1. Member did not receive an SRB.

A14.4.1.2.5.2. Recommendation whether or not to recoup and terminate SRB (followed by OSS commander's rationale).

A14.4.1.2.6. Whether "For Cause" or "Not for Cause."

A14.4.1.3. AOF/CC synopsis of individual's training.

A14.4.1.4. Immediate supervisor's duty performance statement.

A14.4.1.5. Trainee's statement with any supporting documents (if applicable).

A14.4.1.6. Copy of all documents in AF Form 623.

A14.4.1.7. AF Form 2096.

A14.4.1.7.1. AFSC INFORMATION (left side). AFPC only updates what is on the left side. Examples listed below:

A14.4.1.7.1.1. Line 4: PAFSC FROM: (PAFSC being disqualified from) To (recommend Reporting Identifier (RI)).

A14.4.1.7.1.2. Line 5: CAFSC: (Same as above, ensure correct PAFSC and CAFSC are used).

A14.4.1.7.1.3. Line 6: EFFECTIVE: (Only fill in if medical disqualification—use date on medical disqualification paperwork).

A14.4.1.7.1.4. WITHDRAW AFSC: (Insert AFSC being withdrawn).

A14.4.1.7.2. OJT INFORMATION (right side). Example listed below:

A14.4.1.7.2.1. Line 3: WITHDRAW AFSC: (AFSC being disqualified from) TS CODE (e.g., T)

A14.4.1.7.3. IAW AFI 36-2201, enter appropriate statement in the remarks section of AF Form 2096, and have the trainee sign. (T-1)

A14.4.1.8. Copy of last three enlisted performance reports (if applicable).

A14.4.1.9. Medical evaluations (if applicable).

A14.4.2. The Commander, with the aid of the BTM, should evaluate the training provided to the individual.

A14.4.3. BTM will provide the FSS/CC and OSS/CC with a "For Cause" or "Not for Cause" concur or non-concur recommendation of AFSC withdrawal letter within 14 duty days of receiving the AFSC withdrawal documentation. A recommendation letter suspense extension will be coordinated with the OSS/CC (if applicable). (T-1)

A14.4.4. MAJCOM OPR for ATC will provide the OSS/CC with a "For Cause" or "Not for Cause" concur or non-concur recommendation of AFSC withdrawal letter within 14 duty days of receiving the AFSC withdrawal documentation. A recommendation letter suspense extension will be coordinated with the OSS/CC (if applicable).

A14.4.5. After receiving all recommendations, the Commander determines the next step in the withdrawal course of action.

A14.4.5.1. If the Commander's overall evaluation does not substantiate the recommended AFSC withdrawal, then: (T-1)

A14.4.5.1.1. Return the controller for duty.

A14.4.5.1.2. Document return to training on AF Form 623a or suitable substitute.

A14.4.5.1.3. Notify MAJCOM OPR for ATC of return to duty status within 24 hours of initiation.

A14.4.5.2. If the Commander's evaluation does substantiate the recommended AFSC withdrawal, then continue to paragraph A15.4.6.

A14.4.5.3. If the Commander's evaluation substantiates recommended withdrawal with a change in the category initially recommended then: (T-1)

A14.4.5.3.1. Proceed to the new category checklist.

A14.4.5.3.2. Suspend the controller's ATCS certificate under the new category (Attachment 15).

A14.4.6. In addition to paragraph A14.4.1 above, the NATCT/TSN will: (T-1)

A14.4.6.1. Forward an electronic copy of items A14.4.1.1. - 14.4.1.8. to the Force Support Squadron (Force Management) for entry into the Case Management System (CMS) for AFPC review.

A14.4.6.1.1. Include AFSC withdrawal recommendation letter from BTM.

A14.4.6.1.2. Include AFSC withdrawal recommendation letter from MAJCOM OPR for ATC.

A14.4.6.1.3. Reference item A14.4.1.6., only include CFETP Part II: (AFJQS portion only), AF Forms 797 and 623a or suitable substitute training documentation.

Note: Unit will file one copy of withdrawal package according to AFI 33-364, Records Deposition—Procedures and Responsibilities.

A14.5. AFSC withdrawal notification:

A14.5.1. AFPC/DPSIDC will notify the CMS originator the status of AFSC withdrawal and further withdrawal instructions or guidance, as necessary. (T-3)

A14.5.1.1. NATCT/TSN will e-mail a scanned AF Form 2096 to AFPC/DPSIDC. If requested by AFPC, NATCT/TSN will mail a signed (original signature) to AFPC/DPSIDC. (T-1)

A14.5.1.2. AFPC/DPSIDC ATTN: Disqualification 550 C Street West, Ste 10

Randolph AFB, TX 78150-4712

A14.5.2. AFPC/DPSIDC will notify the CMS originator once AF Form 2096 paper copy is received and MILPDS updated. (T-3)

A14.5.3. 9A000, 9A100, 9A200, and 9A300 are the disqualified airmen RIs as described in the Air Force Enlisted Classification Directory (AFECD). AFI 36-2101, *Classifying Military Personnel (Officer and Enlisted)*, **Chapter 4**, delineates Air Force policy for withdrawing (disqualification from)/downgrading AFSCs and implements the AFECD. The AFECD is published four times per year and is the authoritative source for reporting identifiers and their applicability to airmen.

Additionally, AFI 36-2201 provides further guidance. Criteria for RI are outlined below:

A14.5.3.1. Disqualification reasons beyond control (Not for Cause) – RI 9A000. No longer meets the specialty qualifications for the awarded AFSC, and the basis for withdrawing the AFSC is for conditions or actions not within the member's control.

A14.5.3.1.1. Medical conditions such as hearing loss, toxic chemical exposure, injuries, etc.

A14.5.3.1.2. Failure to progress in training for reasons beyond the Airman's control (e.g., reading comprehension deficiency, learning disability, etc.).

A14.5.3.2. Disqualification reasons within control (For Cause) – RI 9A100. Commander must consider separation for all airmen before initiating retraining.

A14.5.3.2.1. Loss of security clearance due to misconduct.

A14.5.3.2.2. Drug or alcohol involvement.

A14.5.3.2.3. Failure to progress in training for reasons within their control. (e.g., ability and aptitude to perform job, but doesn't try).

A14.5.3.2.4. Substandard duty performance or other acts that lead to AFSC withdrawal.

A14.5.3.3. RIs 9A200 (Enlisted Airman Awaiting Discharge, Separation, or Retirement) and 9A300 (Enlisted Airman Awaiting Discharge, Separation, or Retirement for Reasons Beyond Their Control) are described in the AFECD.

A14.5.3.4. Each AFSC disqualification action stands on its own merits and, as such, the RI determination is based on the supporting documentation provided, to include "For/Not for Cause."

A14.5.4. CCTLR will print "Void" across the face of the ATCS certificate. (T-1)

A14.5.5. OSS/CC will recommend retention or revocation of authority to wear the ATC badge or a statement that the authority to wear the badge was not given. (T-1)

A14.5.6. NATCT/TSN will notify the MAJCOM OPR for ATC once AFPC approves the AFSC withdrawal actions and MILPDS is updated removing the 1C1XX AFSC. (T-1)

A14.5.7. MAJCOM OPR for ATC will notify HQ AFFSA/XA of completed ATC withdrawal action and include the following the information:

A14.5.7.1. Name, rank and last four of SSN.

A14.5.7.2. Skill Level (3, 5, 7, or 9 for enlisted controllers, 1 or 3 for officers).

A14.5.7.3. Reason for withdrawal.

A14.5.7.4. Date of controller suspension.

A14.5.7.5. Primary location and facility assigned.

A14.5.7.5.1. If applicable, AOR deployment location.

A14.5.7.6. Whether withdrawal was "For Cause."

Attachment 15

SAMPLE MEMORANDUM, CHANGE OF RECOMMENDED WITHDRAWAL CATEGORY

MEMORANDUM FOR (Controller Concerned)(*date*)
FROM: (Unit Commander)
SUBJECT: Change of Recommended ATCS Certificate Withdrawal Category
1. This is to inform you the evaluation of your case resulted in a change of category to my letter, (date), Subject: ATCS Certificate Suspension and Pending Withdrawal. You are hereby recommended for withdrawal under the provisions of AFI 13-204v3. (Statement of substance of cause for change in recommended withdrawal category.)
2. You may consult with legal counsel and may submit any written statement or documentary evidence you believe should be considered reference the change of recommended withdrawal category.
3. Acknowledge receipt of this memorandum by endorsement below within five workdays. Any statements or documents that you wish to be considered should be submitted with the return of your endorsement.
(Signature of Unit Commander)
1st Ind(*date*)
FROM: (Controller)
TO: (Unit Commander)
1. I acknowledge receipt of change to recommended category of ATCS certificate withdrawal.
2. I have been afforded the opportunity of consulting with legal counsel regarding this action. I was counseled by (name), (grade and title, if military), (address, if civilian) / I declined legal counsel.
3. I have / have not attached a statement in my own behalf.
4. I agree / disagree with the proposed action.
Note: If change of category is from Fear of Controlling (medical) to "failure to maintain mandatory qualification standards other than medical", then add the following paragraph.
1. I understand withdrawal action under the category of "failure to maintain mandatory qualification standards other than medical" may result in:
a. ATCS certificate removal “For Cause" (initial).
b. Termination/recoupment of SRB (initial).
c. Possible administrative discharge action (initial).
(Signature of Controller Concerned)
(Name, Grade, USAF)

Note: Controller will initial directly above the phrases lined out in the endorsement.

Attachment 16

ATC AFSC WITHDRAWAL PROCESS NARRATIVE FLOWCHART

STEP	ACTION OWNER	NARRATIVE
1	CCTLR, AOF/CC & OSS/CC	CCTLR PLACES CONTROLLER IN STOP TRAINING, AOF/CC NOTIFIES MAJCOM OPR FOR ATC OF PENDING WITHDRAWAL & OSS/CC ISSUES AN ATCS CERTIFICATE SUSPENSION, PENDING WITHDRAWAL AND IDENTIFIES WHETHER “FOR CAUSE” OR “NOT FOR CAUSE”
2	SUPERVISOR & AOF/CC	AOF/CC & IMMEDIATE SUPERVISOR INVESTIGATE & PROVIDE TRAINING & DUTY PERFORMANCE STATEMENTS TO OSS/CC.
3	NATCT/TSN	COMPILES TRAINING DATA AND FORWARDS TO THE BASE TRAINING MANAGER (BTM) & MAJCOM OPR FOR ATC FOR CONCURRENCE OR NON-CONCURRENCE.
4A	OSS/CC & BTM	OSS/CC WORKS WITH BTM TO EVALUATE THE TRAINING PROVIDED TO THE INDIVIDUAL. BTM PROVIDES THE OSS & FSS CC’S A RECOMMENDATION LETTER WITHIN 14 DUTY DAYS OF RECEIVING THE WITHDRAWAL DOCUMENTATION.
4B	MAJCOM OPR FOR ATC	MAJCOM OPR FOR ATC EVALUATES THE TRAINING PROVIDED TO THE INDIVIDUAL & PROVIDES THE OSS/CC A RECOMMENDATION LETTER WITHIN 14 DUTY DAYS OF RECEIVING THE WITHDRAWAL DOCUMENTATION. IF MORE TIME NEEDED TO EVALUATE TRAINING REQUEST EXTENSION WITH OSS/CC.
5	OSS/CC	OSS/CC EVALUATES ALL WITHDRAWAL RECOMMENDATIONS. IF THE COURSE OF ACTION IS TO CONTINUE WITH AFSC WITHDRAWAL, PROCEED TO STEP 6. IF NOT, PROCEED TO STEP 5A.
5A	OSS/CC	OSS/CC DIRECTS THE INDIVIDUAL TO BE REENTERED INTO TRAINING & DOCUMENTS ACCORDINGLY.
6	NATCT/TSN & FSS	NATCT/TSN FORWARDS INDIVIDUALS TRAINING DATA TO FSS (FORCE MANAGEMENT) TO BE ENTERED INTO THE CASE MANAGEMENT SYSTEM (CMS) FOR AFPC REVIEW.
7	AFPC/ DPSIDC	REQUEST RECEIVED VIA CMS. AFPC/ DPSIDC REVIEWS DISQUALIFICATION STANDARDS AND DOCUMENTATION PROVIDED TO DETERMINE IF WITHDRAWAL IS APPROVABLE AND THE RECOMMENDED REPORTING IDENTIFIER (9A000 – 9A300) IS SUPPORTABLE. IF SO, GO TO STEP 9 FOR NON TRAINING-RELATED ACTIONS, IF TRAINING-RELATED GO TO STEP 8, IF NOT SUPPORTABLE PROCEED TO STEP 7A.

7A	AFPC/ DPSIDC, FSS & OSS/CC	AFPC/ DPSIDC RETURNS PACKAGE TO CMS ORIGINATOR VIA CMS. CMS ORIGINATOR (FORCE MANAGEMENT) NOTIFIES OSS/CC OF DETERMINATION. OSS/CC DETERMINES NEXT COURSE OF ACTION.
8	AFPC/ DPSIT (TRAINING-RELATED CASES ONLY)	AFPC/ DPSIT REVIEWS PACKAGE TO ENSURE IT MEETS STANDARDS & CONCURS OR NON-CONCURS WITH WITHDRAWAL ACTION. IF WITHDRAWAL REQUEST MEETS TRAINING STANDARDS, PROCEED TO STEP 9. IF NOT, PROCEED TO STEP 7A.
9	AFPC/DPSIDC, FSS, OSS/CC & NATCT/TSN	AFPC/DPSIDC RETURNS PACKAGE TO CMS ORIGINATOR VIA CMS. CMS ORIGINATOR NOTIFIES OSS/CC OF FINAL DETERMINATION, NEED FOR AF IMT 2096 (AND CHANGES THERETO, AS NECESSARY). NATCT/TSN WILL E-MAIL A SIGNED AF IMT 2096 TO AFPC/DPSIDC. IF REQUESTED, NATCT/TSN WILL MAIL A SIGNED (ORIGINAL SIGNATURE) TO AFPC/DPSIDC.
10	AFPC/DPSIDC, FSS & OSS/CC	OSS/CC IS NOTIFIED VIA CMS ORIGINATOR ONCE AF IMT 2096 IS RECEIVED & PROCESSED BY AFPC/DPSIDC.
11	CCTLR	SHALL PRINT “VOID” ACROSS THE FACE OF THE ATCS CERTIFICATE
12	OSS/CC	RECOMMENDS RETENTION OR REVOCATION OF AUTHORITY TO WEAR THE ATC BADGE OR A STATEMENT THAT THE AUTHORITY TO WEAR THE BADGE WAS NOT GIVEN
13	NATCT	NATCT/TSN NOTIFIES MAJCOM OPR FOR ATC OF COMPLETED WITHDRAWAL ACTION.
14	MAJCOM	MAJCOM OPR FOR ATC NOTIFIES AFFSA/A3A OF COMPLETED WITHDRAWAL ACTION.

Attachment 17

AFSC WITHDRAWAL CHECKLIST FOR CONTROLLERS WHO FAIL TO MAINTAIN

QUALIFICATION STANDARDS OTHER THAN MEDICAL

A17.1. Name, Grade, Date Assigned.

A17.2. Initial Withdrawal Actions:

A17.2.1. Issue an ATCS certificate suspension, pending withdrawal memorandum and address (Attachment 12): (T-1)

A17.2.1.1. Whether withdrawal is "For Cause" or "Not for Cause."

A17.2.1.2. One of the following statements regarding an SRB:

A17.2.1.3. Member did not receive an SRB.

A17.2.1.4. If received recommendation whether or not to recoup and terminate SRB (followed by OSS commander's rationale).

A17.2.2. AOF/CC notifies MAJCOM OPR for ATC of pending withdrawal action within 24 hours of controller ATCS certificate suspension and advise if it is "For Cause" or "Not for Cause." (T-1)

A17.3. Investigation actions:

A17.3.1. Obtain statements from appropriate personnel immediately after ATCS certificate suspension. Include any actions which make the controller a hazard to flying safety or incapable of performing as an air traffic controller. (T-1)

A17.3.2. Refer the suspended controller to the base flight surgeon to determine if there are medical problems which caused the actions for recommended withdrawal and/or verify the controller meets the ATC medical requirements in AFI 48-123. (T-1)

A17.3.3. Evaluate the statements, medical evaluation(s), and whether or not controller's duty performance is a hazard to flying safety or incompatible with ATC. (T-1)

A17.4. Evaluation, Determination and Processing Actions:

A17.4.1. NATCT/TSN will compile the following information and provide to the MAJCOM OPR for ATC and Base Training Manager (BTM) for concurrence or non-concurrence within three duty days of controller ATCS suspension: (T-1)

Note: If applicable, withdrawal documentation will be provided in electronic format and all Privacy Act information will be IAW AFI 33-332, Privacy Act Program.

A17.4.1.1. ATCS certification suspension letter.

A17.4.1.2. CCTLR 623a stop-training documentation. (T-1)

A17.4.1.3. OSS/CC cover memorandum recommending AFSC withdrawal. Memorandum will include:

A17.4.1.3.1. Course of action recommended. (T-1)

A17.4.1.3.2. Response to allegations made by the controller who is recommended for withdrawal (if applicable). (T-1)

A17.4.1.3.3. Any inconsistent data or recommendations in the ATC staff's supporting statements. (T-1)

A17.4.1.3.4. Any disciplinary or administrative actions taken or pending against the controller that support the withdrawal. (T-1)

A17.4.1.3.5. Why the controller is a hazard to flight safety or incompatible with ATC. (T-1)

A17.4.1.3.6. One of the following statements:

A17.4.1.3.6.1. Member did not receive an SRB. (T-1)

A17.4.1.3.6.2. Recommendation whether or not to recoup and terminate SRB (followed by OSS commander's rationale). (T-1)

A17.4.1.3.7. Whether "For Cause" or "Not for Cause." (T-1)

A17.4.1.4. Statements from appropriate personnel. (T-1)

A17.4.1.5. Copy of all documents in AF Form 623. (T-1)

A17.4.1.6. AF Form 2096. (T-1)

A17.4.1.6.1. AFSC INFORMATION (left side). AFPC only updates what is on the left side. Examples listed below:

A17.4.1.6.1.1. Line 4: PAFSC FROM: (PAFSC being disqualified from) To (recommend Reporting Identifier (RI)).

A17.4.1.6.1.2. Line 5: CAFSC: (Same as above, ensure correct PAFSC and CAFSC are used).

A17.4.1.6.1.3. Line 6: EFFECTIVE: (Only fill in if medical disqualification—use date on medical disqualification paperwork).

A17.4.1.6.1.4. WITHDRAW AFSC: (Insert AFSC being withdrawn). A17.4.1.6.2. OJT INFORMATION (right side). Example listed below:

A17.4.1.6.2.1. Line 3: WITHDRAW AFSC: (AFSC being disqualified from) TS CODE (i.e. T) (T-1)

A17.4.1.7. Enter the following statement in the remarks section of AF Form 2096 and have the trainee sign: "I have been briefed on my promotion status while being withdrawn from upgrade training. I further understand that removal from training based on failure to progress may result in separation." (T-1)

A17.4.1.8. Copy of last three enlisted performance reports (if applicable).

A17.4.1.9. Medical evaluations (if applicable). (T-1)

A17.4.2. The Commander, with the aid of the BTM, should evaluate the training provided to the individual.

A17.4.2.1. BTM will provide the FSS/CC and OSS/CC with a "For Cause" or "Not for

Cause" concur or non-concur recommendation of AFSC withdrawal letter within 14 duty days of receiving the AFSC withdrawal documentation. A recommendation letter suspense extension will be coordinated with the OSS/CC (if applicable). (T-1)

A17.4.3. MAJCOM OPR for ATC will provide the OSS/CC with a "For Cause" or "Not for Cause" concur or non-concur recommendation of AFSC withdrawal letter within 14 duty days of receiving the AFSC withdrawal documentation. A recommendation letter suspense extension will be coordinated with the OSS/CC (if applicable). (T-1)

A17.4.4. After receiving all recommendations, the Commander determines the next step in the withdrawal course of action.

A17.4.4.1. If the Commander's overall evaluation does not substantiate the recommended AFSC withdrawal, then: (T-1)

A17.4.4.1.1. Return controller to duty.

A17.4.4.1.2. Document return to training on AF Form 623a or suitable substitute.

A17.4.4.1.3. Notify MAJCOM OPR for ATC of return to duty status within 24 hours of initiation.

A17.4.4.2. If the Commander's evaluation does substantiate the recommended AFSC withdrawal, then continue to paragraph A17.4.5.

A17.4.4.3. If the commander's evaluation substantiates recommended withdrawal with a change in the category initially recommended then:

A17.4.4.3.1. Proceed to the new category checklist.

A17.4.4.3.2. Suspend the controller's ATCS certificate under the new category (Attachment 15). (T-1)

A17.4.5. In addition to paragraph A17.4.1 above, the NATCT/TSN will: (T-1)

A17.4.5.1. Forward an electronic copy of items A17.4.1.1. through 17.4.1.9. to the Force Support Squadron (Force Management) for entry into the Case Management System (CMS) for AFPC review.

A17.4.5.1.1. Include AFSC withdrawal recommendation letter from BTM.

A17.4.5.1.2. Include AFSC withdrawal recommendation letter from MAJCOM OPR for ATC.

A17.4.5.1.3. Reference item A17.4.1.5., only include CFETP Part II: (AFJQS portion only), AF Forms 797 and 623a or suitable substitute training documentation. **Note:** Unit will file one copy of withdrawal package according to AFI 33-364, Records Deposition—Procedures and Responsibilities. (T-3)

A17.5. AFSC withdrawal notification:

A17.5.1. AFPC/DPSIDC will notify the CMS originator the status of AFSC withdrawal and further withdrawal instructions or guidance, as necessary.

A17.5.1.1. NATCT/TSN will e-mail a scanned AF Form 2096 to AFPC/DPSIDC. If requested by AFPC, NATCT/TSN will mail a signed (original signature) to AFPC/DPSIDC. (T-1)

A17.5.1.2. AFPC/DPSIDC

ATTN: Disqualification 550 C Street West, Ste 10
Randolph AFB, TX 78150-4712

A17.5.2. AFPC/DPSIDC will notify the CMS originator once AF Form 2096 paper copy is received and MILPDS updated.

A17.5.3. 9A000, 9A100, 9A200, and 9A300 are the disqualified airmen RIs as described in the Air Force Enlisted Classification Directory (AFECD). AFI 36-2101, *Classifying Military Personnel (Officer and Enlisted)*, **Chapter 4**, delineates Air Force policy for withdrawing (disqualification from)/downgrading AFSCs and implements the AFECD. The AFECD is published four times per year and is the authoritative source for reporting identifiers and their applicability to airmen. Additionally, AFI 36-2201 provides further guidance. Criteria for RI are outlined below:

A17.5.3.1. Disqualification reasons beyond control (Not for Cause) – RI 9A000. No longer meets the specialty qualifications for the awarded AFSC, and the basis for withdrawing the AFSC is for conditions or actions not within the member's control.

A17.5.3.1.1. Medical conditions such as hearing loss, toxic chemical exposure, injuries, etc.

A17.5.3.1.2. Failure to progress in training for reasons beyond the Airman's control (e.g., reading comprehension deficiency, learning disability, etc.).

A17.5.3.2. Disqualification reasons within control (For Cause) – RI 9A100. Commander must consider separation for all airmen before initiating retraining.

A17.5.3.2.1. Loss of security clearance due to misconduct.

A17.5.3.2.2. Drug or alcohol involvement.

A17.5.3.2.3. Failure to progress in training for reasons within their control (e.g., ability and aptitude to perform job, but doesn't try).

A17.5.3.2.4. Substandard duty performance or other acts that lead to AFSC withdrawal.

A17.5.3.3. RIs 9A200 (Enlisted Airman Awaiting Discharge, Separation, or Retirement) and 9A300 (Enlisted Airman Awaiting Discharge, Separation or Retirement for Reasons Beyond Their Control) are described in the AFECD.

A17.5.3.4. Each AFSC disqualification action stands on its own merits and, as such, the RI determination is based on the supporting documentation provided, to include "For/Not for Cause."

A17.5.4. CCTLR will print "Void" across the face of the ATCS certificate. (T-1)

A17.5.5. OSS/CC will recommend retention or revocation of authority to wear the ATC badge or a statement that the authority to wear the badge was not given. (T-1)

A17.5.6. NATCT/TSN will notify the MAJCOM OPR for ATC once AFPC approves the AFSC withdrawal actions and MILPDS is updated removing the 1C1XX AFSC. (T-1)

A17.5.7. MAJCOM OPR for ATC will notify HQ AFFSA/XA of completed ATC withdrawal action and include the following the information:

A17.5.7.1. Name, Rank and Last four of SSN.

A17.5.7.2. Skill Level (3, 5, 7 or 9 for enlisted controllers, 1 or 3 for officers).

A17.5.7.3. Reason for withdrawal.

A17.5.7.4. Date of controller suspension.

A17.5.7.5. Primary location and facility assigned.

A17.5.7.5.1. If applicable, AOR deployment location.

A17.5.7.6. Whether withdrawal was “For Cause.”

Attachment 18 (Added-AFGSC)

AFGSC AIRFIELD STAFFING REQUIREMENTS

A18.1. (AFGSC) Operational Manning Requirements. The following operational requirements are established for computing minimum position manning IAW Capability-Based Manpower Standard 13EX00. Mission changes, increasing or decreasing future needs shall be coordinated with and approved by the HQ AFGSC/A33S.

A18.1.1. **(AFGSC)** To ensure AFGSC airfield operations manpower authorizations can safely support the National Airspace System, Air Force mission, and AFGSC missions during a 24 hour operation, all AFGSC AOF Facilities will comply with the following facility staffing requirements.

Table A18.1. (Added) Airfield Manning Requirements.

LOCATION	FACILITY WEEKDAY				FACILITY WEEKEND			
	TOWER		RAPCON		TOWER		RAPCON	
	# of Positions	Hours	# of Positions	Hours	# of Positions	Hours	# of Positions	Hours
BARKSDALE	4	8&			2	24*		
	3	8&						
	2	8*						
DYESS	4	8&			2	24*		
	3	8&						
	2	8*						
WHITEMAN COMPLEX	5	8&	7	8&	2	24*	3	24
	3	8&	5	8&				
	2	8*	2	8*				
MINOT	4	16&			2	24*		
	2	8*						
ELLSWORTH COMPLEX	4	8&	7	8&	2	24*	3	24
	3	8&	5	8&				
	2	8*	2	8*				

* Denotes Senior Controller Concept until closing.
& Denotes Watch Supervisor Concept