DEPARTMENT OF THE AIR FORCE
OFFICE OF THE CHIEF OF STAFF
UNITED STATES AIR FORCE
WASHINGTON DC 20330

AFI 11-401_AFGM 2016-01
18 March 2016

MEMORANDUM FOR DISTRIBUTION C
MAJCOMs/FOAs

SUBJECT: Air Force Guidance Memorandum Authorization to Allow Logging of Combat time for Remotely Piloted Aircraft (RPA) Aircrews

By Order of the Secretary of the Air Force, this Air Force Guidance memorandum immediately implements changes to AFI 11-401, *Aviation Management,* to allow logging of combat time for RPA aircrews. To the extent its directions are inconsistent with other Air Force publications, the information herein prevails, in accordance with AFI 33-360, *Publications and Forms Management.* This guidance applies to all US Air Force flight managers, commanders of flying units, and aircrew personnel.

AFI 11-401 is changed as follows:

3.3.6.4 (Added) RPA aircrews are authorized to log combat time when flying an aircraft within hostile airspace, regardless of the aircrew's physical location. Airspace within a combat zone must be specifically designated as hostile airspace by the COMAFFOR to constitute the authority to log combat time as defined in paragraph 3.3.6.1.1. When performing RPA flights outside the designated hostile airspace, combat support time will be logged IAW paragraph 3.3.6.2.

This policy is effective the signed date of this memorandum and is not retroactive.

This memorandum becomes void after one year has elapsed from the date of signature, or upon publication of an Interim Change or rewrite of AFI 11-401, whichever occurs first.

MARK A. WELSH III
General USAF
Chief of Staff

BY ORDER OF THE SECRETARY OF THE AIR FORCE

AIR FORCE INSTRUCTION 11-401

10 DECEMBER 2010
Certified Current, 9 JANUARY 2013
Flying Operations

AVIATION MANAGEMENT

COMPLIANCE WITH THIS PUBLICATION IS MANDATORY

ACCESSIBILITY: Publications and forms are available for downloading or ordering on the Air Force e-Publishing website at **www.e-publishing.af.mil.**

RELEASABILITY: There are no releasability restrictions on this publication.

OPR: HQ USAF/A3O-AT
Supersedes: AFI 11-401, 7 March 2007

Certified by: HQ USAF/A3O-A
(Col Jeffrey R. McDaniels)
Pages: 95

This instruction implements AFPD 11-4, *Aviation Service.* It establishes procedures for managing Air Force flying resources and provides guidance that applies to administering aircrew flight management programs. It applies to all US Air Force flight managers, commanders of flying units, and aircrew personnel. This publication applies to Air Force Reserve Command, the Air National Guard, and to USAF aircrew personnel assigned to active flying positions in the Civil Air Patrol. Send comments and suggested improvements to this instruction on AF Form 847, *Recommendation for Change of Publication*, through channels to AF/A3O-AT. Major commands (MAJCOMs), field operating agencies (FOAs), HQ USAF direct reporting units (DRUs), and subordinate organizations may supplement this instruction. Supplements cannot be less restrictive than the basic publication. MAJCOMs, FOAs, and DRUs will coordinate their supplements to this instruction with AF/A3O-AT before publication and will forward one copy to AF/A3O-AT after publication; subordinate organizations will coordinate their supplements with parent organizations and will furnish one copy of their supplement to the next higher headquarters. This document requires the collection and or maintenance of information protected by the Privacy Act of 1974. The Privacy Act System of Records Notice F011 AF XO A, Aviation Resource Management Systems (ARMS) covers required information. Ensure that all records created as a result of processes prescribed in this publication are maintained in accordance with AFMAN 33-363, *Management of Records*, and disposed of in accordance with the Air Force Records Disposition Schedule (RDS) located at **https://www.my.af.mil/afrims/afrims/afrims/rims.cfm**.

SUMMARY OF CHANGES

This revision incorporates Changes 1 and 2 to AFI 11-401, 7 Mar 2007, removes HARM-specific procedural guidance throughout the AFI (migrates to AFI 11-421), clarifies HAF and MAJCOM responsibilities (**1.2** and **1.3**), provides MEP guidance (**1.6.2.5** and **Attachment 1**) updates orientation flight guidance (**Table 1.1**), updates guidance on commander flights with MEP on board (**1.12.4.1**) and guidance on general officer flights with passengers or MEP on board (**1.12.4.2** and **1.12.4.3**), updates ACIP entitlement information (**Figure 2.1**), updates OFDA requirements (**Table 2.7**) and deletes Transition Status Codes, updates OFDA waiver guidance (**2.6**), updates guidance on performance of flying duties (**2.7**, **2.8**, **2.9**, **2.10**), revises general officer flying guidance (**2.12.3.1**, **2.14.5.1**), adds RPA Time guidance (**3.2.3.1**), updates General Officer Flying Hour Information Report requirements (**3.15**), updates the Aircrew and MEP definitions (**Attachment 1**), and makes administrative changes throughout the AFI.

Chapter 1—RESPONSIBILITY AND OBLIGATIONS, FLIGHT AUTHORIZATIONS, AND FOREIGN MILITARY FLYING **6**

Section 1A—Responsibilities and Obligations 6

1.1. Overview. 6

1.2. Responsibilities of AF/A3O-A. 6

1.3. Responsibilities of MAJCOMs. 6

1.4. Responsibilities of Subordinate Organizations. 8

1.5. Responsibilities of Aircrew Members and Parachutists. 10

1.6. Flying Obligations. 12

1.7. Waivers. 14

Section 1B—Flight Authorization 14

1.8. Aircraft Flight Authorizations. 14

1.9. Authorization for Using US Air Force Aircraft. 16

Table 1.1. Orientation Flight Approval Authorities (by Type of Flight) (Note 1). 18

1.10. Authorization to Perform Inflight Duties in Air Force Aircraft. 22

1.11. Authorization to Perform Inflight Duties in Non-US Air Force Aircraft. 24

1.12. Requirements for Pilots in Dual Controlled Aircraft. 25

Section 1C—Flying by Military and Civilian Personnel of Foreign Nations in USAF Aircraft 27

1.13. Air Force Policy. 27

1.14. Flight Authorizations. 27

1.15. Procedures for Processing Requests that Require HQ USAF Approval. 28

1.16. Requests for Exception. 29

Chapter 2—AVIATION RESOURCE MANAGEMENT POLICIES 30

Section 2A—Flying Program 30

2.1. Rated Officer and Career Enlisted Aviator (CEA) Flying Program. 30

Table 2.1. Aircrew Position Indicator (API) Codes (Note 8). 30

2.2. Flying Activity Codes. 32

Table 2.2. Flying Activity Codes (FAC) (See Note below). 32

2.3. Aviation Service Codes (ASC). 33

Table 2.3. ASC First Character (Entitlement Status Code [ESC], Rated Officers). 33

Table 2.4. ASC First Character (Entitlement Status Code [ESC], Career Enlisted Aviators). 35

Figure 2.1. ACIP Entitlement Status, (Rated Officers). 36

Figure 2.2. CEFIP Entitlement Status (Career Enlisted Aviators). 37

Table 2.5. ASC Second Character (Flying Status Code [FSC], Disqualified or Suspended Status). 37

Table 2.6. ASC Second Character (Flying Status Code [FSC], Qualified Active and Inactive Flyer) (Note 1). 38

2.4. Operational Flying Duty. 40

Table 2.7. OFDA Requirements. 40

2.5. Rated Officer and Career Enlisted Aviator Operational Flying Duty. 41

2.6. OFDA Waivers. 43

2.7. Taking Part in Flying by Rated Officers. 46

2.8. Flight Surgeon, Pilot-Physician, and Critical Care Air Transport Team Flying Policy. 47

2.9. Taking Part in Flying by Career Enlisted Aviators. 48

2.10. Taking Part in Flying by Non-rated Officer Aircrew Members and Non-CEA Enlisted Aircrew Members. 49

Section 2B—Supervisory Operational Flying Positions 50

2.11. Supervisory Position Criteria. 50

2.12. Supervisory Flying. 50

Table 2.8. General Officer Flying Positions. 51

2.13. Supervisory Position Limitations. 53

2.14. Indoctrination Flying. 53

Table 2.9. Indoctrination Flying Approval Authority. 54

2.15. Operational Support Aircraft (OSA) and Aircrew Management. 55

Section 2C—Support of Personnel Assigned to Locations or Organizations Lacking Flying Facilities or Aircraft 55

2.16. Attachment for Flying/Parachuting. 55

Section 2D—Flying with Air Reserve Component Units 56

2.17. Total Force Absorption Program (TFAP) In addition to the guidance provided in this section, aircrew personnel must comply with Total Force Absorption Program (TFAP) guidance contained in AFI 11-412. 56

2.18. Flying With AFRC Units. 56

2.19. Flying With ANG Units. 57

2.20. Coordination Authorization. 57

2.21. TFI and Associate Units. 57

Chapter 3—FLIGHT DOCUMENTATION 59

Section 3A—Logging of Flight Activity 59

3.1. Enter and credit flight time. 59

3.2. Crediting Flight Time. 59

3.3. Definition of Flight Time Categories. 60

3.4. Flight Condition Time. 65

3.5. Non-rated/non-CEA Flight Time. 66

Section 3B—Logging of Flight Activity (General) 66

3.6. Logging Flight Time for Pay. 67

3.7. Logging Flight Time by Rated Officers and Career Enlisted Aviators in Inactive Flying Status. 67

3.8. Non-rated/non-CEA Crewmembers and Operational Support Flight Time. 67

3.9. Logging Flight Time in Non-US Air Force Aircraft. 68

3.10. Logging Other US Military Time. 68

3.11. Logging Student Time. 68

3.12. Logging Foreign Military Time. 68

3.13. Logging Flight Time in Other Than Military Aircraft. 68

3.14. Logging Civilian Flight Time. 68

3.15. Quarterly General Officer Flying Hour Information Report. 68

3.16. Adopted Forms. 69

3.17. Prescribed Forms. 69

Attachment 1—GLOSSARY OF REFERENCES AND SUPPORTING INFORMATION 70

Attachment 2—INSTRUCTIONS FOR USING AFTO FORM 781, ARMS AIRCREW/MISSION FLIGHT DATA DOCUMENT 79

Attachment 3—ARMS AIRCREW/MISSION FLIGHT DATA EXTRACT 91

Attachment 4—INSTRUCTIONS FOR USING AF FORM 4327, ARMS FIGHTER FLIGHT AUTHORIZATION, AND AF FORM 4327A, CREW FLIGHT AUTHORIZATION (FA) 92

Chapter 1

RESPONSIBILITY AND OBLIGATIONS, FLIGHT AUTHORIZATIONS, AND FOREIGN MILITARY FLYING

Section 1A—Responsibilities and Obligations

1.1. Overview. The policies and requirements of this instruction apply to all personnel who fly onboard Air Force aircraft, and their commanders. In addition, it provides guidance on the Jump Record Folder (JRF), Aviation Service Codes (ASC), and flight authorization (FA) codes in **Table A2.3** for Air Force parachutists. Further guidance on parachutist policies and requirements can be found in AFI 11-410, *Personnel Parachute Operations.*

1.2. Responsibilities of AF/A3O-A. The Director of Air Operations (AF/A3O-A):

1.2.1. Through the DCS, Operations, Plans and Requirements (AF/A3/5), and the Director of Operations (AF/A3O), establishes and monitors the Air Force flying program as outlined in this instruction to ensure effective use of resources. Unless otherwise specified in this instruction, AF/A3O-A is the waiver authority for this instruction. (See paragraph **1.7** for waiver guidance.)

1.2.2. Assigns AF/A3O-AT as the Office of Primary Responsibility (OPR) for this instruction.

1.3. Responsibilities of MAJCOMs. (For purposes of this instruction, ANG is considered a MAJCOM, except as provided otherwise.) MAJCOM/A3s will provide oversight of MAJCOM flying programs. MAJCOMs will establish a system to carry out the requirements of this instruction and meet training and operational needs of the Air Force.

1.3.1. MAJCOM Commanders will prohibit any agency or unit from operating or maintaining an aircraft that does not have an established system program director. Waiver authority is MAJCOM/A3; coordinate waivers with MAJCOM/A4. Aircraft procured through non-DoD resources will not be flown or operated by USAF units without MAJCOM approval.

1.3.2. MAJCOM Commanders may direct grounding of MDS-specific or all aircraft within their commands for maintenance reasons. When a MAJCOM has lead command aircraft responsibility, MAJCOM commanders may recommend grounding of all aircraft within an MDS-specific fleet. MAJCOM Commanders may also direct a stand-down of aircrew personnel when warranted by operational considerations, in conjunction with aircraft grounding or as a separate action. A stand-down has no immediate impact on the operational status of any unit aircraft; it is the result of an operational unit commander directing unit aircrews not to fly for a specific reason. A stand-down provides the commander time to assess an incident or finding and actions required to safely resume operations. Notification will be provided IAW AFI 10-206, *Operational Reporting.* See also AFI 21-101, *Aircraft and Equipment Maintenance Management*, for additional guidance. Return to normal operations will be initiated by the commander directing the original grounding/stand-down. Authority for grounding and/or stand-down may be delegated by MAJCOMs in supplements to this and other governing AFIs, but not lower than MAJCOM/A3/A4.

1.3.2.1. The Director, Air National Guard (DANG), may ground United States Air Force aircraft assigned to the Air National Guard (ANG) and stand-down ANG aircrews. The DANG will coordinate any grounding or stand-down decisions with the Chief, National Guard Bureau. When the DANG exercises this authority to ground aircraft, the Secretary of the Air Force and the Chief of Staff of the Air Force will be notified as soon as practicable. No further delegation of this authority is authorized.

1.3.3. Interfly Guidance. Lead MAJCOMs will place interfly guidance (if applicable) in AFI 11-2MDS-Specific, Volumes 3. As required, establish additional interfly guidance in MAJCOM supplements to this AFI. Prior to the flight, ensure interfly agreements are approved and all unit coordination is complete. Ensure required information is provided to members Host Aviation Resource Management (HARM) offices.

1.3.4. Ensure no aircrew member is assigned Flying Status Code (FSC) S (**Table 2.6**) (except Duty Not Involving Flying [DNIF] members) or assigned ASC 04 (**Table 2.5**) beyond 180 days without being disqualified for aviation service, returned to flying/ground based radar duties, or reassigned to non-flying status/duty. MAJCOM/A3T or equivalent is the waiver authority for the 180-day limit. MAJCOM/A3 is the waiver authority to extend members in this status beyond 365 days. Send information copy to AF/A3O-AT for all cases waived beyond 365 days. ***Note:*** For members previously in DNIF status, the 180-day period begins on the date the member was cleared to perform flying duties.

1.3.5. Ensure FSC K (**Table 2.6**) is used only for aircrew members assigned to an active Aircrew Position Indicator (API), but not authorized to fly due to lack of resources (aircraft, flying hours, etc.). To ensure the requirement for active flying is still valid, each position occupied by a member assigned FSC K must be revalidated by the MAJCOM/A3 at the end of each fiscal year. The member's commander will submit a request for revalidation through group channels for MAJCOM/A3 approval. Upon completion of the revalidation, send notification to the member's Host Aviation Resource Management (HARM) office authorizing the continuance of FSC K. Send an information copy to AF/A3O-AT. See paragraph **1.4.1.9** for additional guidance. ***EXCEPTION:*** MAJCOM/A3 revalidation is not required for FSC K assigned to members deployed to a non-flying assignment.

1.3.5.1. FSC K is not authorized when aircrew members are double billeted due to permanent change of station (PCS) or permanent change of assignment (PCA) actions.

1.3.6. Review all cases when a rated officer with longer than 18 years of aviation service and assigned to an active flying position, or a CEA with longer than 20 years of aviation service and assigned to an active flying position, has not flown for 180 days and is not in suspension, disqualification, or DNIF status. Review will determine whether the member should be disqualified from aviation service, reassigned to an inactive flying position, or returned to flying. ***Note:*** For members previously in DNIF status or assigned ASC 04, the 180-day period begins on the date the member was cleared to perform flying duties.

1.3.7. The serving HARM office will monitor double billeting management IAW paragraph **1.4.2.1** and provide a monthly report to the applicable MAJCOM/A3T. The MAJCOM/A3T will facilitate waiver request or aviation management actions with the servicing HARM office.

1.3.8. IAW AFI 33-360, *Publications and Forms Management*, MAJCOMs supplementing this AFI must rewrite, update (using an interim change [IC]), or certify supplements as current within 180 days of the publication of this AFI and whenever this AFI is updated (either by an IC or a rewrite). If the prior supplement conflicts with the current version of this AFI, the supplement must be immediately rescinded. Ensure subordinate organizations update supplements when higher headquarters publications are updated. See AFI 33-360 for specific guidance.

1.4. Responsibilities of Subordinate Organizations.

1.4.1. Commanders are responsible for compliance with the requirements of this instruction. Commanders will:

1.4.1.1. Issue orders and supervise all personnel assigned or attached to their command for flying duties.

1.4.1.2. Establish procedures to ensure all flights are reviewed for flight feasibility. Commanders may direct a stand-down of unit flying operations when warranted by maintenance, operational, or safety considerations. Provide notification IAW AFI 10-206, *Operational Reporting*.

1.4.1.3. Ensure compliance with appropriate instructions, and adequate crew preparation for safe conduct of flight.

1.4.1.4. Verify aircrew member qualification before assignment to an aircrew position.

1.4.1.5. Notify the HARM office within 10 days of the beginning of any investigations that may affect an aircrew member's aviation service (including Flying Evaluation Boards).

1.4.1.6. Notify the MAJCOM/A3T or equivalent office when a rated officer with longer than 18 years of aviation service and assigned to an active flying position, or a CEA with longer than 20 years of aviation service and assigned to an active flying position, has not flown for 180 days and is not in suspension, disqualification, or DNIF status. ***Note:*** For members previously in DNIF status or assigned ASC 04, the 180-day period begins on the date the member was cleared to perform flying duties.

1.4.1.7. Ensure aircrew members that have been disqualified for aviation service have the appropriate disqualification aeronautical order (AO) published, even if the member may have already separated or was dismissed from the Air Force. Every effort should be made to accomplish the disqualification action before the aircrew member is separated or dismissed.

1.4.1.8. Ensure aircrew members assigned FSC S or assigned ASC 04 do not exceed 180 days in this status without obtaining approval from the MAJCOM/A3T. If an extension is required, the member's unit commander will submit the request for an extension/waiver prior to the 180-day limit. If a waiver of the 180-day limit was previously approved IAW paragraph **1.3.4**, the member's unit commander must again obtain waiver approval prior to the member exceeding 365 days in FSC S or ASC 04 status. AFI 11-402, *Aviation and Parachutist Service, Aeronautical Ratings and Badges*, provides applicable guidance for suspensions/disqualifications. See AFI 11-421, *Aviation Resource Management*, for additional guidance.

1.4.1.9. Obtain OG/CC or equivalent approval for assignment of FSC K and provide the approval source document to the servicing HARM office for publication of the AO. The approval document will contain justification. Provide an information copy to the MAJCOM/A3.

1.4.1.9.1. The HARM office will use the letter approving return to aviation service as the source document to publish an AO to assign FSC K for members returned to service as the result of an FEB.

1.4.1.9.2. A member's commander will submit a letter or military orders to the servicing HARM office directing assignment of FSC K when the aircraft and/or unit is deactivated and the member is still assigned to an active billet pending reassignment. MAJCOM/A3 notification is not required.

1.4.1.9.3. Use the Contingency Exercise Deployment (CED) orders to assign FSC K effective the date of the deployment when a member is assigned to an active API and deployed to a non-flying assignment for 90 days or more. MAJCOM/A3 notification is not required.

1.4.1.9.3.1. Use the date the member returned from a non-flying deployment as documented by a signed DD Form 1351-2 (or suitable substitute) or commander's letter to return members to active aviation service.

1.4.1.9.4. In all cases, the HARM office will publish the AO, with explanatory remarks. If required, the OG/CC will submit a revalidation request to the MAJCOM/A3 no later than 30 September (see paragraph **1.3.5**). Upon receipt, the HARM office will permanently file all MAJCOM/A3 revalidation approvals on the left side of the member's FRF.

1.4.2. Commanders, including nonflying unit commanders, manage assigned aircrew/parachutist members and coordinate changes affecting aircrew members flying status and parachutist members jump status with the HARM office. ***Note:*** This includes all Air Force Reserve Command Individual Mobilization Augmentee (IMA) flyers assigned to active duty units at gaining MAJCOMs.

1.4.2.1. Commanders will manage rated and CEA aircrew positions IAW AFI 11-412, *Aircrew Management*. API 5, 6, 8, B, and D coded positions may be double-billeted for replacement of the primary incumbent only, both members may be assigned an actively FAC/FSC provided the overlap is not more than 30 calendar days. On or before the 30th day, the commander will identify which aircrew member to assign inactive flying activity, FSC H. The MAJCOM/A3 may waive this paragraph to allow double-billeting and active flying for no longer than 180 calendar days. This waiver authority will not be delegated lower than the MAJCOM/A3. (***EXCEPTION:*** Staff personnel tasked to fill a deployed active flying billet may be double billeted for the duration of the deployment).

1.4.2.2. Commanders will manage non-rated & non-CEA aircrew and parachutist positions IAW AFI 11-402.

1.4.2.3. Commanders will ensure aircrew/parachutist members and/or unit orderly rooms notify the base HARM office of all non-flying/non-parachuting/non-controlling TDYs, projected PCS, retirement, or separation actions. This requirement can be met by

forwarding copies of all aircrew/parachutist members/non-controlling TDY, permanent change of station (PCS), retirement, or separation orders to the base HARM office to process required AO or ARMS actions.

1.4.2.3.1. Commanders will ensure aircrew/parachutist members pick up their FRF/JRF from the HARM office prior to final outprocessing for PCS assignments.

1.4.2.3.2. Commanders will ensure aircrew/parachutist members and/or unit orderly rooms notify the HARM office prior to a permanent change of assignment (PCA) action.

1.5. Responsibilities of Aircrew Members and Parachutists.

1.5.1. Safely and effectively use available flying, controlling and parachute jump resources to obtain and maintain aircrew or parachutist qualification when assigned to active flying or jump billets. See AFI 11-402 for guidance pertaining to failure of members to accomplish aircrew or parachutist training requirements.

1.5.2. Accomplish an annual flight or jump records review to validate aviation/parachutist service actions and the record of flying or jump accomplishments during the previous year. HARM offices may e-mail annual record review documents for a member's review and certification. The member will complete the review not later than the end of the member's birth month. Members will acknowledge the review by either sending a signed Individual Data Summary (IDS) to the HARM office or by providing an e-mail reply confirming the review was completed. File review documentation with the IDS in the FRF/JRF. (Does not apply to cadets who do not have FRF/JRF requirements.)

1.5.2.1. Certification is acknowledgement by the member that the flying/jump data is correct. Information maintained in the FRF or JRF will not be changed without official source documentation. For example an AFTO Form 781 or AF Form 3520 for missing flights and sorties, AETC Form 240-5 for student hours, an AF Form 922 or AF Form 4323 for missing jumps, Military ID or re-enlistment paperwork for date of separation change and personnel data that did not interface to ARMS, etc. In the absence of source documents, the member may submit a DD Form 149 to the Air Force Board for Corrections to Military Records (AFBCMR) IAW Air Force Pamphlet 36-2607, *Applicant's Guide to the Air Force Board for Correction of Military Records (AFBCMR).* HARM offices will ensure all flying hour corrections (especially to career totals) are supported by a source document. File a copy of the DD Form 149 in the FRF IAW AFI 11-421. Flying hour log books and/or letters submitted under previous Air Force Policy will be retained in the FRF IAW AFI 11-421.

1.5.2.1.1. AF/A3O-AT is OPR for AFBCMR requests. AF/A3O-AT may contact HARM offices directly to obtain documents for review/validation, to expedite corrective action if an AFBCMR request is received, or expedite corrective action to ARMS data received on the Consolidated Headquarters Aviation Resource Management System (CHARM) report (see AFI 11-421).

1.5.2.2. Inactive aircrew/jump personnel will accomplish a records review within 120 days prior to PCS. They are not required to accomplish annual reviews of their FRF/JRF.

1.5.2.3. Aircrew/jump personnel suspended or disqualified for aviation service will accomplish a FRF/JRF review within 30 days of the suspension or disqualification action. Geographically separated members will acknowledge the review by either sending a signed IDS to the HARM office or by providing an e-mail reply confirming the review was completed.

1.5.3. Ensure the HARM office maintaining the FRF or JRF is aware of a pending PCS. The HARM office must be advised of the proposed departure date, date of last flight or jump before departure, and date the individual will pick up the FRF or JRF. Member must notify the HARM office at least five days prior to departure, if applicable. Geographically separated members may send a written notification to the attached HARM office to mail their FRF/JRF to the gaining base. Validate flights accomplished before departing PCS and sign ARMS generated PCS products IAW AFI 11-421.

1.5.4. Pick up the Flight Evaluation Folder (FEF) and FRF or JRF before departing for PCS or flying/jumping TDY IAW AFI 11-421. Members initiating parachutist status, scheduled to attend jump school, must give the HARM office a copy of their TDY orders at least 5 work-days prior to TDY, to allow processing of the initial AO authorizing jump status.

1.5.5. Turn in the FRF or JRF to the proper HARM office (or notify the HARM office that the record was mailed) within 10 duty-days after arriving at a new duty station (includes flying TDY). Inactive aircrew members and parachutists must also turn in the FRF, JRF, and FEF within 10 duty days. If a member does not turn in the FRF or JRF within the 10 day limit, the HARM office will suspend aviation career incentive pay (ACIP), career enlisted flyer incentive pay (CEFIP), hazardous duty incentive pay (HDIP), and static or high altitude low opening (HALO) jump incentive pay by assigning ASC 04 via AO. Upon receipt of the member's FRF/JRF, the HARM office will revoke the suspension and restore incentive pay, if otherwise qualified. HARM offices will consider mailed records as "turned in" and will not suspend incentive pay for these members. HARM offices will make every effort to contact the member prior to stopping incentive pay. HARM offices will ensure FRFs/JRFs are inprocessed to the ARMS database NLT 10 calendar days after receipt of the records. ***Note:*** The losing HARM office will mail the FRF to the gaining HARM office if the member's next duty location HARM office is not collocated within the gaining HARM office.

1.5.5.1. Aircrew members and parachutists assigned to an inactive API code/duty position (after an active flying assignment – PCA or PCS) will turn in their FEF to the HARM office within five duty days of assignment to an inactive API code/flying position (i.e. API-6 flyer is placed in an API-3 position). The HARM office will file the FEF inside the member's FRF. If the member returns to active flying status, the HARM office will contact the member to pick up the FEF or forward the FEF to the member's flying unit. (If the FEF is forwarded, the HARM office will retain a copy of the contents until receipt is acknowledged by the gaining unit.)

1.5.6. Turn in medical records to the Flight Medicine Element (FME) within 10 duty-days after arriving at new duty station and complete initial medical clearance requirements prior to first flight or jump.

1.5.6.1. Initial medical clearance requirements also apply to members who deploy for 365 days or longer in TDY or PCS status.

1.5.7. Complete flight physicals and Preventive Health Assessment (PHA) IAW AFI 48-123, *Medical Examinations and Standards* and AFI 44-170, *Preventive Health Assessment.*

1.5.8. Members will sign out their AF Form 702, *Individual Physiological Training Record* (original), and AF Form 1042, *Medical Recommendation for Flying or Special Operational Duty* (copy) from the HARM office prior to attending physiological/centrifuge training. Upon completion of training, return forms to the HARM office within 5 duty days after arrival at home station.

1.5.9. Inactive aircrew members will notify the HARM office not later than 10 duty days prior to departing on an authorized flying TDY (includes requalification courses).

1.5.10. Request attachment for flying according to paragraph **2.16** when assigned to an active flying billet in a unit without flying facilities or aircraft.

1.5.11. When aircrew members depart PCS or PCA, ensure sign-out from unit/base does not negatively affect Operational Flying Duty Accumulation (OFDA) credit. Aircrew members require at least 15 days on active flying status in a month to receive OFDA credit for that month. See paragraph **2.5** for additional guidance pertaining to operational flying duty.

1.5.11.1. Aircrew members assigned to an active flying billet who are being reassigned to an inactive billet should make every effort to outprocess from their unit/base *after the 15th of the month* to provide an opportunity to obtain the last month of OFDA credit (if flight requirements are also met).

1.5.11.2. Aircrew members assigned to an inactive billet who are being reassigned to an active billet should outprocess from their unit/base *before the 15th of the month* to provide an opportunity to obtain OFDA credit for the first month of assignment in an active billet (if flight requirements are also met).

1.6. Flying Obligations.

1.6.1. **During Time of War.** Commanders (including unit commanders) may order Air Force members on active duty to make flights in any aircraft. Members are not entitled to incentive pay unless placed on active AOs that require them to perform specific in-flight duties on a frequent and regular basis as defined in this instruction. Members are not entitled to such pay if the pay is suspended by the President according to Title 37 United States Code (USC). Members are entitled to flight credit IAW paragraph **3.2**

1.6.1.1. Members qualified on the aircraft in which they are tasked to perform in-flight duties log the appropriate aircrew certification code IAW **Table A2.3** and flying hours associated with duties performed IAW **Section 3A** of this instruction.

1.6.1.2. Members not qualified on the aircraft in which they are tasked to perform in-flight duties log “O” or “X” aircrew certification code (first character) and other time IAW paragraph **3.3.5**

1.6.2. **In Time of Peace.** Commanders (including unit commanders) may order Air Force members on active duty to make official flights when in the best interest of the Air Force. Aircrew members on active flying status AOs will receive incentive pay if otherwise qualified and flight requirements are met (does not apply to non-interference fliers on AOs). Rated officers and CEAs will receive OFDA credit if otherwise qualified.

1.6.2.1. Military and civil service (GS) aircrew members who are properly qualified, meet the criteria of this instruction and AFI 11-402 for initiating aviation service, and are directed to perform specific inflight duties on a frequent and regular basis will be placed on AOs and a flight authorization.

1.6.2.1.1. An aircrew member not obtaining or maintaining qualification in a specific aircraft will be placed on the flight authorization for that aircraft only when his or her presence is required for accomplishment of the mission. (See also paragraph **1.8.1**) These members will log time IAW paragraph **3.2** of this instruction.

1.6.2.1.2. Aircrew members in a specialty not listed in an AFI 65-503, US Air Force Cost and Planning Factors, crew complement, who are not obtaining or maintaining aircraft qualification, may be authorized to fly IAW paragraph **1.8** and log flying times IAW paragraph **3.2** of this instruction when required for the mission.

1.6.2.2. Non-aircrew members who are properly qualified and directed to perform specific inflight non-interference duties will be placed on AOs and the flight authorization but will not be placed on the AFTO Form 781, *ARMS Aircrew/Mission Flight Data Document*. Refer to paragraph **2.10.4** for additional guidance. ***EXCEPTION:*** Non-aircrew members assigned to flying unit commander positions or remotely piloted aircraft (RPA) sensor operator positions (1N1XX) may log flying time in assigned aircraft IAW paragraphs **3.2.1.5.2** and **3.2.1.5.3**

1.6.2.3. Military members not on AOs, and not required to perform duties or obtain and maintain qualification in the aircraft, must fly in passenger status. These members will be placed on a passenger manifest, and must fly on commercial or military aircraft with adequate facilities for transporting passengers. Refer to paragraphs **1.8.3, 1.9.4.7.**, **2.10.5.**, and applicable MDS-Specific guidance for further passenger guidance/restrictions.

1.6.2.4. Commanders, including unit commanders, may detail by written orders personnel under their command to take part in aircraft flights operated by any foreign government accredited by the United States, provided the flights do not add additional expense to the US Government, and provided personnel are on AOs authorizing frequent and regular flights. See paragraph **1.11** for additional guidance.

1.6.2.5. Personnel who are required for the execution of the aircraft or unit mission and personnel not authorized AOs (as specified above) tasked to perform unique ground support duties at an enroute location or destination point that are directly related and essential to accomplishment of the aircraft or unit mission may fly as Mission Essential Personnel (MEP). MAJCOMs may further define MEP in MAJCOM supplements to this instruction, but guidance may not be less restrictive than the guidance contained herein. See paragraph **1.12.2.2** for additional guidance, and **Attachment 1, *Terms***, for MEP definition.

1.6.2.5.1. The OG/CC (or equivalent) with operational control of the mission being flown authorizes MEP status. If operational control transfers, the OG/CC (or equivalent) who assumes follow-on operational control may continue/revise MEP status (coordinate changes with originating OG/CC). MAJCOMs may establish intra-command and inter-command guidance to facilitate this process. MEP may only fly on aircraft capable of carrying passengers IAW the provisions of DoD 4515.13-R, *Air*

Transportation Eligibility. ***EXCEPTIONS:*** MEP who are mission essential may fly on aircraft not normally equipped for carrying passengers. MEP who fly under the provisions of this exception must be physically and physiologically (when required) qualified and must complete applicable egress training prior to flight.

1.6.2.6. MAJCOMs may designate aircrew members who travel as additional crewmembers (not required for the mission being flown but required for follow-on missions) as MEP. Approval authority may be delegated below MAJCOM level.

1.6.2.6.1. For AMC missions already in the system, the TACC Senior Controller may approve MEP status. For other MAJCOM missions in the system, MAJCOMs may designate (in MAJCOM supplements) individuals who may approve MEP status for members assigned to the command. Approval authority will be retained at the MAJCOM level unless the MAJCOM functional authority is exercised from a subordinate NAF, in which case the NAF may exercise approval authority. MAJCOM Standardization/ Evaluation Chiefs may approve MEP status for MAJCOM or MAJCOM-gained missions for evaluators assigned to the MAJCOM. Additional crewmembers who fly in MEP status may only fly on aircraft capable of carrying passengers IAW provisions of DoD 4515.13-R.

1.7. Waivers.

1.7.1. For Combat Missions or National Emergencies. MAJCOM commanders may waive any requirements of this instruction when necessary to carry out combat missions or to accomplish missions flown during a state of national emergency. Provide notification to AF/A3/5 with a copy to AF/A3O-AT.

1.7.2. At Other Times. Unless otherwise specified in this instruction, AF/A3O-A is the waiver authority for this instruction. Request waivers through applicable channels to the MAJCOM/A3, or equivalent level. MAJCOM/A3s (or equivalents) will forward requests to AF/A3O-A, with a courtesy copy to AF/A3O-AT. Waiver authority for supplemental guidance will be as specified in the supplement and approved through the higher level coordination authority.

1.7.3. Administrative Procedures. MAJCOMs may publish HQ USAF waivers in supplements citing the authority (e.g., HQ USAF/A3O-A memo, date, subject). See AFI 33-360 for additional guidance on waivers to publications.

Section 1B—Flight Authorization

1.8. Aircraft Flight Authorizations.

1.8.1. Prior to all flights in Air Force aircraft, commanders (including unit commanders) issue written authorizations documenting all personnel required to perform inflight duties on the mission. Units will use AF Form 4327, *ARMS Fighter Flight Authorization*, or AF Form 4327a, *Crew Flight Authorization*, as applicable to the unit aircraft. A commander's (including unit commanders) verbal authorization may direct aircraft flight only when time constraints or administrative procedures prevent written authorization. Written confirmation of this order must be issued within three duty-days. Once a Flight Authorization (FA) has been signed, changes to aircrew names and/or duty positions must be validated by a designated approving authority by placing the approving authority's initials by the line

changed. The OG/CC or equivalent commander with operational control of the mission is responsible for the publication/ maintenance/retention of the aircraft FAs for each mission flown by the aircraft. Only commissioned officers and officer equivalent government civilians in active flying positions are authorized to be authenticating officials for Flight Authorizations. FA authenticating officials will be appointed in writing by the OG/CC or equivalent commander. ***EXCEPTION 1:*** Aeromedical Evacuation (AE), Pararescue (PJ), and ANG Senior Scout unit commanders and properly designated authenticating officials may publish a FA for assigned aircrew members required to perform aircrew duties on the mission. Commanders or designated authenticating officials must ensure all members listed meet go/no-go criteria prior to authenticating the FA. The FA is not a stand-alone document and must be attached to the aircraft FA for the mission on which aircrew members were required to perform in-flight duties. If the AE or PJ crew is scheduled to perform aircrew duties on more than one mission, a remark will be placed on the FA to depict variations. As a minimum, the information in blocks 11 through 18 must be documented on the flight authorization. In the Remarks section of the aircraft FA, annotate the AE/pararescue FA number, date, and unit designation. The FA is a critical document used to validate aircrew member‘s duties/flight time logged on the AFTO Form 781. Officers or officer equivalent government civilians will be designated as FA authenticating officials in writing by the OG/CC or equivalent commander. Members properly designated as FA authenticating officials IAW this paragraph are not required to be assigned to an active flying position to perform FA authentication duties. ***EXCEPTION 2:*** RPA units will complete a preflight authorization signed by the aircraft commander to confirm go/no-go checks were completed. The authenticating official will issue a verbal order for the mission. The FA will be published upon termination of the mission and include crew members who flew on the mission, verbal order acknowledged in the remark section, and AC block initialed by the duty scheduler.

1.8.1.1. Units will validate go/no-go qualification IAW AFI 11-202, Volume 2, *Aircrew Standardization/Evaluation Program*, prior to authorizing members to participate in aircrew or operational support duties. Once a FA has been published, the pilot in command, or FA authenticating official if the pilot in command is not available, will validate go/no-go status for additional aircrew or operational support members prior to authorizing them to fly and adding or attaching them to the FA. Validation may include ARMS products IAW AFI 11-421 (or comparable database for USAFA airmanship programs), a FA from an AE, Pararescue, or Senior Scout unit commander (or designated representative), or a letter from the member’s unit validating the individual‘s qualification to fly on required missions. ***Note:*** When preparing flight authorizations for missions scheduled on future dates, the aviation resource management specialist or designated representative responsible for go/no-go validation will confirm the member’s AO status and ensure currency (to include flight physical and physiological training) and qualification will remain valid through the scheduled flight date(s). The FA is an official document depicting what actually occurred on the mission. The original, printed, signed forms with changes annotated are required documentation. Reproduction and disposal of the original forms to remove pen/ink changes after the flight authenticating official has signed the form and sorties/missions have occurred is not authorized.

1.8.2. The flight authorization must include (minimum requirements):

1.8.2.1. A designated pilot-in-command, and formation flight leader of each flight or flight element.

1.8.2.2. Name, grade, and flight authorization duty code (**Table A2.3**) of each crewmember, operational support flier, or any other official personnel (use the position designation established by the MAJCOM) required for the mission or flight.

1.8.2.3. Type, serial number, mission symbol, and call sign of aircraft or formation.

1.8.2.4. Place from which the flight will depart plus "on-or-about" departure date.

1.8.2.5. An itinerary and the phrase "Variations in itinerary authorized."

1.8.3. Flight authorizations will only include personnel on AOs (or contract aircrew personnel on a memorandum of agreement/contract) authorized to perform in-flight duties for that mission according to paragraphs **1.10** and **3.2** of this instruction. Except for MEP and non-interference members, individuals on the flight authorization should match those authorized to log time on the AFTO Form 781, *ARMS Aircrew/Mission Flight Data Extract*.

1.8.3.1. Personnel who are on the aircraft for point-to-point travel, an orientation/familiarization flight or to only perform a proficiency jump (not performing aircrew duties for that mission) will be listed on the passenger manifest. Passenger manifesting is required on all DoD owned and controlled aircraft, IAW DoD 4500.09-E, *Transportation and Traffic Management*.

1.8.3.2. If MEP are transported, IAW MAJCOM supplements, they may be listed on the flight authorization in the Remarks section only. If MEP are listed on the flight authorization, the Remarks section will include all information required by DD Form 2131, *Passenger Manifest*, to include emergency contact information. If MEP are not listed on the flight authorization, they must be placed on the passenger manifest. MEP will not be listed on the AFTO Form 781, will not log time, and will not accrue OFDA credit.

1.8.4. If a mission is cancelled after the FA is signed, line through the canceled portion(s) of the flight authorization and annotate the reason for cancellation (e.g. weather or maintenance cancel).

1.8.5. MAJCOMs will establish procedures to ensure compliance with the guidance in this section for alert sorties.

1.9. Authorization for Using US Air Force Aircraft.

1.9.1. Commanders (including unit commanders) authorize aircraft flights to support command operations.

1.9.2. Commanders (including unit commanders) will ensure each flight is in the direct interest of government business and does not exceed flying hour allocations without specific approval. Commanders (including unit commanders) will **not** authorize flights for personal convenience or recreation.

1.9.3. The transportation of passengers and cargo will be in accordance with DoD 4515.13-R. The Deputy Chief of Staff/Logistics, Installations & Mission Support (HQ USAF/A4/7), develops and publishes passenger policy to oversee passenger movement. AFI 24-101,

Passenger Movement, provides guidance and procedures for arranging official transportation of Air Force personnel.

1.9.4. Commanders (including unit commanders) may use Air Force aircraft under their control to:

1.9.4.1. Perform tactical and combat operations.

1.9.4.2. Train aircrew personnel and evaluate aircrew performance.

1.9.4.3. Allow aircrews to meet the flying requirements of this instruction.

1.9.4.4. Further national health or safety interests, to include saving of human life if a medical officer indicates the situation involves possible loss of life, limb, or sight (DoD 4515.13-R).

1.9.4.5. Cooperate with foreign governments as directed by HQ USAF.

1.9.4.6. Perform other official missions as required.

1.9.4.7. Conduct the Air Force Orientation Flight and Public Affairs Travel programs according to DoD 4515.13-R; AFI 11-301, *Aircrew Flight Equipment (AFE) Program*; AFI 11-403, *Aerospace Physiological Training Program*; AFI 35-103, *Public Affairs Travel*; AFI 35-105, *Community Relations*; AFI 48-123, this instruction, and MAJCOM guidelines.

1.9.4.7.1. Orientation Flights. The USAF conducts orientation flights to reward and motivate individuals (incentive orientation flights only), ensure a better understanding of a particular weapon system and its role, or when the flight is determined to be in the best interest of the USAF. Orientation flights may be approved as provided in DoD 4515.13-R and this instruction. No authority exists for approval of an orientation flight during which a record attempt is made, a first flight is made on an aircraft just accepted into the inventory, a first flight over an isolated geographical area, or any other flight of a similar or special nature, where abnormal conditions may exist. **Table 1.1** is a matrix of approval authorities for orientation flights.

1.9.4.7.1.1. Distinguished Visitor (DV) Flights. Display USAF weapons systems to individuals so they gain a better understanding of the particular aircraft and mission.

1.9.4.7.1.2. Familiarization Flights. Familiarize individuals who normally have aviation-related responsibilities with USAF aircraft and missions.

1.9.4.7.1.3. Incentive Flights. Provide a visible reward to USAF active duty and Air Reserve Component military personnel for outstanding service and motivate other military personnel to similar performance levels.

1.9.4.7.1.4. Spouse Orientation Flights. Familiarize military spouses with the unit aircraft and mission to enhance their understanding of the military member's role and contribution to the Air Force mission. Spouse orientation flights will be limited to retention and recruitment of critical skills and will not be expanded to an all-skills, service-wide program. Spouse orientation flights will adhere to the following guidance:

1.9.4.7.1.4.1. Provide flights within approved flying hour programs.

1.9.4.7.1.4.2. Do not use aircraft requiring routine oxygen breathing equipment, or equipped with ejection seats, or have automatic escape devices requiring special training.

1.9.4.7.1.4.3. Do not accomplish simulated emergency procedures, unusual attitudes, touch-and-go landings, minimum altitude, terrain following profiles, airdrop missions, and other maneuvers/profiles listed in MDS-specific publications as prohibited with passengers on board.

1.9.4.7.1.4.4. Ensure a qualified pilot or copilot occupies the seat throughout the flight. Under no circumstances will a spouse be given control of the aircraft. The pilot in command will brief this restriction prior to each mission.

1.9.4.7.1.4.5. Units with fighter, bomber, and two-seat trainer aircraft may establish an aircraft spouse taxi-ride program.

1.9.4.7.1.5. Passengers on orientation flights must be in appropriate organizational uniform, where applicable, and present appropriate identification.

1.9.4.7.2. Public Affairs Flights. The Air Force conducts public affairs flights for prominent US citizens, civic leaders, news media representatives, etc. See AFI 35-103 for guidance, to include approval authorities for public affairs flights.

1.9.4.7.3. MAJCOMs, ANG, FOAs, and DRUs will administer orientation and public affairs flight programs according to the above guidelines. Secretary of Defense moratorium, "Civilian Visitors Operating Military Equipment" (22 Feb 01), and CSAF memorandum, "Air Force Policy on Civilian Visitors Operating Military Equipment" (20 Jul 01), apply (source documents on file in HQ USAF/A3O-AT; copies available upon request). For approval authorities in **Table 1.1**, ANG will use equivalent positions, as appropriate.

1.9.4.7.3.1. Maintain appropriate documentation on activity levels and periodically evaluate program effectiveness.

1.9.4.7.3.2. Units requesting orientation flight support from other MAJCOMs will submit a request through their owning MAJCOM/A3 to the supporting MAJCOM/A3 for staffing and approval.

Table 1.1. Orientation Flight Approval Authorities (by Type of Flight) (Note 1).

Line	A	B	C
	Type of Flight	**Authorized Participants**	**Approval Authority**
1	Distinguished Visitor (DV)	Members of the Congress or their staffs (Note 2)	SECAF via SAF/LL (Note 2)

2	Orientation flight	Senior Federal government (U.S.), and equivalent foreign government officials (Brigadier General [equivalent] and above or civilian equivalents) (Note 5)	MAJCOM/CC (Notes 3, 4,
3		US ambassadors and their senior deputies, within overseas theaters, when invited by the theater or component commander	Overseas MAJCOM/CC (Notes 3, 4)
4	Familiarization orientation flight	Foreign nationals working for the DoD, when in the commander's overseas area of responsibility, and when the commander has determined that the flight is in the primary interest of the DoD. (Ref. DoD 4515.13-R, Chapter 10.) (Note 5)	
5		Foreign civilians (Notes 5, 10). See AFI 35-103 for foreign media flights.	AF/CV (Note 13)
6		Foreign military (Brigadier General [equivalent] and above or civilian equivalents) (Note 5)	MAJCOM/CC (Notes 3, 4)
7		Foreign military (Brigadier General [equivalent] and above or civilian equivalents) for requests that do not fall within normal MAJCOM channels (i.e., FOA requests) (Note 5)	HQ USAF/A3O-A
8		Foreign military (Colonel [equivalent] and below or civilian equivalents) (Note 5). Non-DoD Federal government (U.S.) officials (Colonel [equivalent] and below).	MAJCOM/FOA/ DRU/CC (Note 3) (May be delegated to NAF/CC and Center/CC)
9		Foreign nationals during participation in exercises sponsored or directed by: CJCS, Combatant Commanders, and USAF component commanders of the Combatant Commands, which include combined operations of U.S. and foreign forces. (Ref. DoD 4515.13-R, Chapter 2.) (Notes 5a, 6) (Note 1 N/A)	MAJCOM/CC (Note 3) (May be delegated to the Deployed Forces Commander)
10		Foreign military not listed above. (Ref. AFI 11-401, Chapter 1.) (Note 5)	AF/A3O-A
11		U.S. citizens, when in direct support of the approving command. (Ref. DoD 4515.13-R, Chapter 10.) (Note 7)	MAJCOM/CC (Note 3)
12		Active-duty and Reserve Component military (all grades) and DoD civilian equivalents (all grades) (Note 15)	MAJCOM/A3 (Notes 3, 12, 15) (May be

13		Service Academy and ROTC cadets and midshipmen (Notes 8, 14)	delegated but not lower than WG/CC or equivalent level)
14		Junior ROTC, Civil Air Patrol, Explorer Scouts (Note 12)	
15		FAA employees (comply with DoD 4515.13-R, Chapter 4.)	
16		Civilian employees of DoD contractors (Note 9)	
17		Youth in Congressionally sanctioned, DoD-approved Youth Programs (Notes 10, 11, 12)	
18	Incentive orientation flight	USAF active-duty and ARC military members (Note 15). See paragraph **1.9.4.7.1.3**.	
19	Spouse orientation flight	Spouses of US active-duty and ARC military members. See paragraph **1.9.4.7.1.4**.	
20	Orientation flights in non-USAF aircraft	Active-duty and Reserve Component military (all grades) and DoD civilian equivalents (all grades) (Note 15)	See paragraph **1.11.3**
21	Point-to-point flights	Point-to-point orientation flights are not authorized (Ref, DoD 4515.13-R, Chapter 4) (Note 1); an exception to policy must be approved to permit point-to-point flights. See Note 1a for additional guidance.	AF/CV (Note 13); SECAF for Line 1
22	Exceptions to policy/All other orientation flights	Not listed above	AF/CV (Note 13)

This table provides approval authority guidance for orientation flights (as defined in DoD 4515.13-R, Chapter 4) <u>only</u>. Guidance for Public Affairs flights (ref. DoD 4515.13-R, Chapter 3) is provided in the DoD regulation and in AFI 35-103.

NOTES:

1. "Orientation flights" are defined as continuous flights performed within the local flying area and terminating at the point of origin (DoD 4515.13-R, Chapter 4). "Note 1 N/A," means the category of flight may not be considered an orientation flight; however, it is included in the table as a consolidated reference source.

1a. ***EXCEPTION:*** Units may accomplish orientation flights within the local flying area to operational and remote sites that are part of the home unit, as long as the mission terminates at the point of origin. Such flights providing unit mission orientation are not considered point-to-point flights and an exception to policy is not required (OSD-ATL policy guidance, Feb 10).

2. Requests for point-to-point travel must be specifically addressed and approved by SECAF. Retiring members of Congress and retiring congressional staff members may be flown on orientation flights only upon the written approval of the Assistant Secretary of Defense for Legislative Affairs (ASD[LA]). (Ref. DSD Memo, 23 Dec 1996.) For Line 1, initiate action through SAF/LLO (SAF/LLO Workflow in the Global Address List).

3. When aircraft are "chopped" or assigned to a gaining Combatant Commander, approval authority will be the Commander Air Force Forces (COMAFFOR) or Theater Special Operations Command (SOC) commander.

4. Inform AF/CC, AF/A3/5, AF/A3O, AF/A3O-A, if approved. (Provide notification to respective Workflows in the Global Address List.)

5. Flights involving foreign nationals must be reviewed for foreign disclosure requirements and political concerns. Foreign government officials are equivalent to U.S. Federal government officials and do not include local government officials such as mayors, police chiefs, and other local officials who do not represent a foreign government at the national level. Foreign military "civilian equivalents" are comparable to DoD "civilian equivalents."

a. Ensure foreign disclosure requirements and base visit requests are satisfied according to AFI 16-201, *Air Force Foreign Disclosure and Technology Transfer Program*. Contact MAJCOM or COCOM Foreign Disclosure Officer (FDO) for assistance.

b. Coordinate with the country director in the appropriate SAF/IA regional division (four-letter level), before approval, to ensure no political concerns exist that would prevent the flight. Contact SAF/IAR(_) on the Global address list at **saf.iar_@pentagon.af.mil** (blank space is for SAF/IA Regional Division: A for AFRICOM, C for CENTCOM, E for EUCOM, L for NORTHCOM/SOUTHCOM, P for PACOM).

6. This authorization does not include transportation to or from the exercise area or supporting flights utilized for logistics purposes only.

7. Does not include spouses of government personnel, non-DoD Federal officials, or members of Congress and their staffs.

8. For foreign students enrolled in USAF Academy or ROTC programs, ensure foreign disclosure requirements (AFI 16-201) concerning visit authorizations and disclosure of USAF information are satisfied.

9. This is not intended to allow all Government contractor employees to fly. The contractors must be performing work in direct support of the approving command (aircrew training system and aircraft maintenance contractors are the most frequent participants). Normally, the requirement for familiarization flights should be specified in the government contract.

10. Foreign citizens are not included in DoD 4515.13-R as passengers eligible for orientation flights.

11. For youth in Congressionally sanctioned, DoD-approved Youth Programs, program participants may take part in no more than one orientation flight (Ref DoD 4515.13-R, Chapter 4). Parental and/or guardian permission is required and the flight must be approved by SAF/PA. Specific Public Law guidance applies, including Title 10 United States Code (USC), Section 2012, and Title 32 USC, Section 508.

12. Passengers on orientation flights under 18 years of age require parental approval in writing.

13. Requests for exception to policy must be submitted through command channels according to DoD 4515.13-R, Chapter 10, and AFI 24-101. ***Note:*** Exception to policy authority delegated from AF/CC to AF/CV IAW AFI 24-101. Send exception to policy requests to AF/A3/5 with an info copy to AF/A3O-AT.

14. Cadets and midshipmen are authorized orientation flights while on leave status.

15. Aircrew members in suspended (ASC 04) or DNIF status are not authorized familiarization/ orientation or incentive flights without an approved waiver from AF/A3O-AT.

1.10. Authorization to Perform Inflight Duties in Air Force Aircraft.

1.10.1. To perform inflight or parachutist duties, members must be specifically authorized and required for the mission, physically qualified, and current in physiological training when required IAW AFI 11-403, *Aerospace Physiological Training Program*. (***Note:*** See AFI 11-202V1 for guidance regarding physiological training requirements if member will be removed from flying status within four months following the expiration date of physiological training currency.) Unit commanders will restrict individuals from performing inflight duties in the unit assigned aircraft when such performance may adversely impact safety, morale, or mission accomplishment. Commanders (including unit commanders) may authorize the following personnel to perform aircrew duties (as part of the authorized crew complement IAW AFI 65-503, or required for the mission, IAW paragraph **3.2.1.5** of this instruction) and operational support duties (IAW AFI 11-402) on board or supporting Air Force aircraft:

NOTES:

1. For guidance applicable to parachutist members performing duties in Air Force aircraft, see AFI 11-410.

2. An aircrew member, non-interference RPA sensor operator (1N1XX), or parachutist in DNIF status will not perform inflight aircrew or parachutist duties.

3. If not otherwise restricted by AF Form 1042 or MAJCOM guidance, aircrew members in DNIF status may perform aircrew duties in the simulator for which they are qualified.

1.10.1.1. Qualified members of US military services who hold a current aeronautical rating or aviation badge, are on active AOs to take part in frequent and regular flights, and are within the authorized crew complement (AFI 65-503) for the aircraft or are required for the mission.

1.10.1.1.1. Aircrew members will perform duty associated with their current aeronautical rating and aircrew qualification, unless ordered to perform mission-essential rated duties outside their normal aircrew specialty in direct support of MAJCOM (or equivalent) -approved operations. Flying solely for the purpose of qualifying for incentive pay or OFDA credit is not authorized.

1.10.1.1.2. When members are ordered to perform rated duties outside their current aeronautical rating and aircrew qualification, commanders will ensure members are trained and qualified to perform other rated duties. Commanders will provide a memorandum to the member's servicing HARM office with justification for the action. HARM personnel will file this memorandum permanently in the member's FRF and change the member's crew position to Y in ARMS (see also **Table A2.3**). See AFI 11-421 for specific HARM actions.

1.10.1.2. Qualified non-rated officers and enlisted personnel of US military services on AOs, who are required to perform mission essential inflight duties on a full time basis,

and are within the authorized crew complement (AFI 65-503) for the aircraft or are required for the mission.

1.10.1.2.1. Aircrew members will perform duty associated with their current aircrew specialty and aircrew qualification. Flying solely for the purpose of qualifying for incentive pay or OFDA credit is not authorized.

1.10.1.3. Operational support fliers on AOs and required to perform specific inflight duties on an occasional basis that cannot be accomplished by regularly assigned crew members, and other non-rated/non-CEA members on non-interference AOs (paragraphs **2.10.3** and **2.10.4**) who fly occasionally to perform specific official inflight tasks.

1.10.1.3.1. Flying solely for the purpose of qualifying for Hazardous Duty Incentive Pay is not authorized.

1.10.1.4. Personnel authorized by competent authority to receive instruction in aircrew duties at Air Force schools.

1.10.1.5. Professionally qualified civilian employees of the US Government.

1.10.1.5.1. MAJCOM commanders determine individual qualifications. May be delegated to MAJCOM/A3.

1.10.1.6. Qualified employees or prospective employees of a government contractor according to the terms and conditions of a current government contract.

1.10.1.6.1. Unless otherwise directed, MAJCOM commanders determine individual qualifications. May be delegated to MAJCOM/A3.

1.10.1.6.2. The Squadron Aviation Resource Management office will keep a copy of the contract on file. HARM offices may enter government contractors in ARMS for the purpose of tracking aircrew training and physical/physiological qualifications when the member will perform flying duties on a frequent basis. Updating and tracking flying time in ARMS is not authorized.

1.10.1.7. Foreign nationals according to **Section 1C** of this instruction.

1.10.1.8. Cadets assigned to the US Air Force Academy, Air Force Reserve Officer Training Corps (ROTC) cadets, Uniformed Services University of Health Sciences (USUHS) and Health Professions Scholarship Program (HPSP) students participating in aviation related activities; and Civil Air Patrol (CAP) cadets authorized to participate in flying duties as observers, in a special training status, on missions as determined by the MAJCOM.

1.10.1.8.1. HARM offices will publish AOs for such cadets or students. Neither flying incentive pay nor flying duty credit is authorized, nor will aviation service dates be established.

1.10.1.8.2. Cadet training sorties prescribed in paragraph **1.10.1.8** are not orientation sorties. Observer sorties may be conducted IAW all regularly-scheduled sorties and are not restricted to the local flying area. They may be flown in conjunction with student training and IP continuation training sorties, as well as IAW direct support flights, but may not be flown on functional check flight (FCF) or operational check flight (OCF) sorties.

1.10.1.8.3. The purpose of cadet training sorties is to introduce cadets to USAF flying operations and motivate cadets to consider a career as a rated aircrew member. As such, all normally-permitted training events, to include touch and go landings, aerobatics, air combat maneuvering, air refueling, and low level training, are authorized. An IP must be at the controls during all critical phases of flight on cadet training sorties.

1.10.1.9. Cadets assigned to the US Air Force Academy and Air Force ROTC cadets enrolled in approved USAFA flying programs are accorded aircrew status while actively participating in such programs.

1.10.1.9.1. Cadets will be placed on an AF Form 1887, *Aeronautical Order Aviation Service*, authorizing flying status while participating in approved USAFA flying programs. Cadets will not be entered into an operational ARMS database, an Aviation Service Code (ASC) will not be assigned, and an Aviation Service Date (ASD) will not be established. Neither flying incentive pay nor OFDA credit is authorized.

1.10.2. Family members will not be assigned to airborne duty on the same aircraft for a given mission. Family member is defined as spouse, brother, sister, parent, and child.

1.10.2.1. MAJCOMs are authorized to waive this prohibition on a case-by-case basis, only when unusual conditions dictate.

1.10.2.2. Paragraph **1.10.2** does not preclude additional family members from traveling aboard an aircraft in a non aircrew-duty status, when such members are otherwise eligible for air transportation.

1.11. Authorization to Perform Inflight Duties in Non-US Air Force Aircraft.

1.11.1. With MAJCOM approval, aircrew members in active flying positions, and authorized operational support personnel, may perform appropriate duties in non-US Air Force aircraft if it is in the interest of the US Government, approved by the authority that controls the aircraft, the members are qualified or are authorized to receive training prior to qualification and, if applicable, licensed to perform such duties. Prior to authorizing these missions, MAJCOMs will ensure a valid requirement for a USAF aircrew member to operationally fly exists, which cannot be accomplished in USAF aircraft. For operational support flying, justification must show that qualified aircrew or operational support personnel of other (non-US Air Force) services or applicable organizations cannot perform such duties. Requests to fly solely for the purpose of qualifying for incentive pay or OFDA credit will not be approved.

NOTES:

1. MAJCOMs will identify approval authorities in MAJCOM Supplements. Authority may be delegated below the MAJCOM level.

2. If the aircrew member is not assigned/attached to a MAJCOM for flying duties (such as a Combatant Command with a geographic area of responsibility), the Air Force air operations element within that organization will accomplish the MAJCOM function.

3. For members who attend flying training that includes flights in non-USAF aircraft, the orders directing such activity constitute MAJCOM approval and satisfy validation requirements for paragraph **1.11.1.** The member's servicing HARM office will file a copy of the orders in the

member's flight record folder as the source document for authorization to fly in non-USAF aircraft.

4. Aircrew members will perform duties associated with their current aeronautical rating and aircrew qualification, or when specifically authorized to perform mission-related observation or evaluation duties. If a waiver is required to accommodate unique requirements, submit request IAW paragraph **1.7.2.**

1.11.2. Performing duties in non-US Air Force aircraft does not remove military personnel from line-of-duty determination status. When aircrew members are not assigned to API 7 or API G coded positions, MAJCOMs will provide the member's HARM office with a letter of justification authorizing the member to perform official aircrew duties in non-US Air Force aircraft and log flying time IAW paragraph **3.2** HARM offices will use this letter as the source document to assign an appropriate aircrew qualification code IAW AFI 11-421.

1.11.3. **Orientation Flights in Non-US Air Force Aircraft.** MAJCOMs may authorize orientation flights in non-US Air Force aircraft for individuals within their command who are otherwise eligible to fly on US Government aircraft. This authority may be delegated, but not lower than wing commander or equivalent level. Prior to authorizing such flights, approving authorities will ensure a valid requirement exists. Obtain approval from the appropriate authority that controls the non-USAF aircraft. The approving office will clearly indicate to the non-USAF controlling authority and the foreign government (as applicable) that acceptance of an orientation flight does not imply that the USAF/US Government will extend a reciprocal invitation to non-USAF or foreign government (as applicable) personnel. Individuals will not log flight time on orientation flights. Flights do not satisfy flight pay or OFDA requirements.

1.11.4. **USAF Exchange Personnel.** See AFI 16-107, *Military Personnel Exchange Program,* for additional guidance regarding USAF exchange personnel flying with foreign air forces.

1.12. Requirements for Pilots in Dual Controlled Aircraft.

1.12.1. Every flight in a dual-controlled aircraft requires two pilots with current qualification in the aircraft. Anytime an individual not fully qualified in the specific mission-design-series (MDS) occupies a pilot's seat with a set of controls, a current and qualified instructor pilot will occupy the other seat. ***EXCEPTIONS:***

1.12.1.1. If operational, command mission requirements, or MDS-specific instructions dictate that these requirements are not practical.

1.12.1.2. To accommodate training programs for checkout or continuation programs.

1.12.1.3. If the crew composition requires another rated specialty (such as a weapons system officer).

1.12.1.4. To accommodate established programs.

1.12.1.5. Flight surgeons and MAJCOM-designated Flight Test Engineers who take part in flights in dual-controlled aircraft, IAW mission requirements.

1.12.2. At no time will an individual who is not fully qualified as a pilot in the specific type aircraft being flown occupy any pilot's seat (with a set of controls) with passengers on board

the aircraft. For general officer flying, waiver authority to this guidance is AF/CC. ***EXCEPTIONS:***

1.12.2.1. To accommodate training objectives required by formal training programs. This exception allows passengers, who are an integral part of the mission (e.g., Pararescue, Rangers, CCT, SEALs, etc.) and when their presence is required by the training syllabus, to be on board the aircraft. During such times, a current and qualified instructor pilot will occupy the other pilot's seat.

1.12.2.2. In order to accommodate training objectives or mission requirements, pilots (including non-current or unqualified pilots) and other aircrew members, when their presence is required by the training syllabus, authorized to obtain and maintain qualification in a particular MDS aircraft may occupy a pilot's seat for purposes of conducting training or accomplishing mission requirements when MEP are on board the aircraft.

1.12.2.2.1. During such times, if the pilot is non-current or unqualified, or another aircrew member is in a pilot's seat, a current and qualified instructor pilot will occupy the other pilot's seat.

1.12.2.3. See also paragraph **1.12.4** for additional ***EXCEPTIONS*** which apply to commanders, key supervisors, and general officers.

1.12.3. Dual-control aircraft designated in the aircraft flight manual for single pilot operations in IMC/VMC flight may be operated with a single pilot on passenger-carrying missions when operational or command mission requirements dictate that two pilots are not practical. In addition, the other pilot seat may be used for passengers and/or MEP as defined and directed by the MAJCOM. Under no circumstances will a passenger or MEP be given control of the aircraft.

1.12.4. Pilots and other aircrew members not authorized to obtain or maintain aircraft qualification will not occupy a seat with a set of controls with passengers or MEP on board. ***EXCEPTIONS:***

1.12.4.1. Commanders and key supervisors who fly IAW paragraph **3.6.1** may fly in the seat, under instructor pilot supervision, with MEP on board.

1.12.4.2. During non-critical phases of flight, general officer commanders and key supervisors who fly IAW paragraph **3.6.1** may fly in the seat, under instructor pilot supervision, with passengers on board. See AFI 11-202, Volume 3, *General Flight Rules*, for definition of critical phases of flight.

1.12.4.3. General officer pilots in authorized indoctrination flying positions may occupy a pilot's seat with passengers or MEP on board during non-critical phases of flight. During such times a current and qualified instructor pilot will occupy the other pilot's seat. See AFI 11-202, Volume 3, for definition of critical phases of flight. (See also paragraph **2.14.5.1**.)

1.12.4.4. General officers not qualified as a pilot in the specific type aircraft being flown may fly in a pilot's seat to accomplish aircraft delivery flights and other approved flights, under the supervision of a current and qualified instructor pilot, with MEP on board the aircraft.

Section 1C—Flying by Military and Civilian Personnel of Foreign Nations in USAF Aircraft

1.13. Air Force Policy. The foreign military personnel listed below are authorized to take part in flights in US Air Force aircraft. Other foreign military personnel (for example, air attachés, other representatives of foreign air forces in Washington, D.C., Foreign Military Sales [FMS] personnel and Military Assistance Program [MAP] personnel) must be advised to obtain a waiver of flying requirements from their government for the duration of their tour in the continental United States (CONUS).

1.13.1. Foreign officers who serve in the US Air Force under the exchange program described in AFI 16-107 and are required to perform frequent and regular flights as part of their duties are given flying privileges according to this instruction.

1.13.2. Foreign military personnel who receive flight training at Air Force training installations are given flying privileges that correspond to their course of training.

1.13.3. Foreign military personnel assigned or attached to a US Air Force or a joint staff organization, whose duties require such flights as part of combined operations or exercises (such as Red Flag, Blue Flag, etc.).

1.13.4. In overseas commands, subject to approval of the proper commander and following the command administrative procedures, military personnel of friendly foreign nations may take part as aircrew members in flights of US Air Force aircraft operated by the MAJCOM, Defense Intelligence Agency (DIA), US Military Groups (USMILGP), Missions, and Military Assistance Advisory Groups (MAAG) when: the individual is physically, physiologically, professionally, and administratively qualified; a fully qualified US Air Force pilot occupies a pilot position during aircraft operations; and when required by the MAJCOMs, DIA, USMILGP, Missions, or MAAG to help complete their mission.

1.13.5. Flights involving foreign nationals must be reviewed for foreign disclosure requirements, IAW AFI 16-201.

1.13.6. If not otherwise provided for in this instruction, other foreign military personnel stationed at CONUS installations whose duties require them to fly in US Air Force aircraft must request approval according to paragraph **1.16**

1.14. Flight Authorizations.

1.14.1. Air Force flying unit commanders may, within the preceding policy, authorize physically, physiologically, professionally, and administratively qualified military personnel of foreign nations to take part as aircrew members according to this instruction. Although foreign military personnel who take part in flying duties in US Air Force aircraft do not serve in command positions, exchange officers, FMS personnel, and MAP trainees may serve as pilot in command of single-place, multi-place, or formations of aircraft provided they qualify for such duty according to the standards set for a US Air Force pilot.

1.14.2. Foreign military personnel must have official flying records and medical certifications in their possession when they request flight duties in US Air Force aircraft or report to a flying unit for these duties. After the request for flying is approved, the applicant must fulfill US Air Force physiological training requirements before flying.

1.14.2.1. Foreign military aircrew will be placed in the US Air Force Preventive Health Assessment cycle IAW AFI 44-170. Medical grounding management will be analogous to US Air Force standards. However, IAW NATO Standardization Agreement (STANAG) 3526 Aeromedical Working Group document (AMD) and Air Standardization Coordinating Committee (ASCC) agreements, NATO and ASCC allies' home nations will maintain waiver authority unless otherwise delegated in a Memorandum of Understanding.

1.14.3. Flights will be at the minimum level of difficulty consistent with performance of assigned duties. When possible, flights will not exceed either the monthly minimum for pay and currency required by the individual's country or the training level specified in the applicable MDS-specific aircrew training publications, whichever is greater.

1.15. Procedures for Processing Requests that Require HQ USAF Approval.

1.15.1. Except as provided in paragraphs **1.13** and **1.14**, foreign military personnel with requirements for frequent flights for career or service status purposes, or operational needs, must submit a written request through the local base flight management activity and the proper MAJCOM to SAF/IAPD, Foreign Disclosure, Weapon Systems, and Technology Transfer Division, 1080 Air Force Pentagon, Washington DC 20330-1080, in turn. The letter must include:

1.15.1.1. The name, grade, service identification number, and duty status of the applicant.

1.15.1.2. Certification of flight status, including rating and date of rating.

1.15.1.3. A brief summary of the individual's flight history including types of aircraft and number of hours per type aircraft the applicant has flown, date of last flight, and inclusive dates of last 100 hours of flying time.

1.15.1.4. The minimum monthly and annual flight requirements of his or her country.

1.15.1.5. A statement that the applicant is required by his or her air service to fly in order to keep rated status, to avoid jeopardizing service or career status, and to meet flight requirements for pay purposes, and that such flight requirements cannot be waived by the service authorities of his or her country.

1.15.1.6. A statement that US Air Force aircrew members are authorized reciprocal privileges in the applicant's country.

1.15.2. The Air Force flying unit to which the applicant will be attached will verify that the member's flight records are accurate. The unit will affirm capability to absorb the applicant within the unit flying program.

1.15.3. The MAJCOM to which the applicant will be attached will review the request and send it to SAF/IAPD with comments and recommendations.

1.15.4. SAF/IAPD requests the foreign air attaché in Washington, DC to verify the information on the request and the applicant's statement of flying requirements, to advise if requirements can be waived (when necessary), and to affirm reciprocal flying privileges for US Air Force personnel. With this information, SAF/IAPD approves or disapproves the

request, subject to concurrence by HQ USAF A3O-A and the gaining MAJCOM, then advises the foreign attaché and the applicant.

1.16. Requests for Exception. Submit requests concerning foreign personnel to take part in flights in USAF aircraft under conditions other than provided in this instruction or DoD 4515.13-R to AF/A3O-A with an info copy to AF/A3O-AT, IAW paragraph **1.7.2**

1.16.1. MAJCOM and FOA commanders may approve orientation flights for foreign military or civilian equivalents within their area of responsibility, according to **Table 1.1**, provided all foreign disclosure requirements (AFI 16-201) concerning visit authorizations and disclosure of USAF information are satisfied.

Chapter 2

AVIATION RESOURCE MANAGEMENT POLICIES

Section 2A—Flying Program

2.1. Rated Officer and Career Enlisted Aviator (CEA) Flying Program. The rated officer and CEA inventory requires close management at all levels to ensure a high state of readiness is maintained with available resources. The authorized rated inventory includes pilots, navigators/combat systems officers (CSO) and air battle managers (ABM) in the grade of lieutenant colonel and below. To manage these as well as other rated/CEA aircrew positions, API codes are assigned to identify these positions. ***Note:*** API codes 1-0 apply to all rated officers, and codes A-Z apply to CEA personnel (**Table 2.1**).

Table 2.1. Aircrew Position Indicator (API) Codes (Note 8).

API Codes	Explanation	Remarks
1	Pilot positions used primarily for cockpit duty.	See Note 1
2	Navigator/combat systems officer or observer positions used primarily for cockpit duty.	See Note 1
3	Staff or supervisory positions at wing level and below that have responsibilities and duties that require rated expertise but which do not require the incumbent to fly.	See Note 2
4	Staff or supervisory positions above wing level that have responsibilities and duties that require rated expertise but which do not require the incumbent to fly.	See Note 2
5	Flight surgeon positions. This code is restricted to AFSC 48XX, or 40C0C with an additional AFSC of 48XX.	See Notes 3, 4, and 5
6	Staff or supervisory positions at wing level and below that have responsibilities and duties that require the incumbents to actively fly or perform OFDA-creditable ground based radar duties.	See Notes 2, 3 and 4
7	USAF officers not occupying a USAF rated position, but assigned to active flying duties in other than USAF units (exchange officers, etc.). Reserved for use only when directed by AF/A3O-AT.	See Note 6
8	Staff or supervisory positions above wing level that have responsibilities and duties that require the incumbent to actively fly or perform OFDA-creditable ground based radar duties.	See Notes 2, 3 and 4
9	Air Battle Managers who are required to fly operationally or perform OFDA-creditable ground based radar duties.	Note 9
0	Rated officers assigned to non-rated duties and all non-rated	See Note 7

	officers.	
A	CEA positions used for line flying unit with Primary Mission Assigned Inventory (PMAI) aircraft assigned.	See Note 1
B	Staff or supervisory positions at wing level and below that have responsibilities and duties that require the incumbent to actively fly.	See Notes 2, 3, and 4
C	Staff or supervisory positions at wing level and below that have responsibilities and duties that require aircrew expertise but which do not require the incumbent to actively fly.	See Note 2
D	Staff or supervisory positions above wing level that have responsibilities and duties that require the incumbent to fly.	See Notes 2, 3, and 4
E	Staff or supervisory positions above wing level that have responsibilities and duties that require aircrew expertise but which do not require the incumbent to actively fly.	See Note 2
F	Crewmembers assigned to positions for OT&E, IOT&E, and FMS.	See Note 4
G	CEA not occupying a USAF position, but assigned to active flying duties in other than USAF units (exchange programs, etc.). Reserved for use only when directed by AF/A3O-AT.	See Note 6
Z	Enlisted personnel not assigned to CEA duties and all non-CEA enlisted.	See Note 7

NOTES:

1. APIs 1, 2, and A are for officers and CEAs assigned to line flying positions or assigned to formal flying training programs. The primary duty of these crewmembers is flying.
2. API 3, 4, 6, 8, B, C, D, and E identify crewmembers assigned to supervisory or staff positions. These positions require aircrew expertise (API 3, 4, 6, 8, B, D, and E) and some require active flying (API 6, 8, B, and D) or ground based radar duties (API 6, 8).
3. If more than one crewmember is assigned to an API-5, 6, 8, B, and D position, only the primary designated incumbent will be assigned an active FAC/FSC code and fly. The MAJCOM/SGPA or higher will determine which flight surgeons are designated as the primary incumbent.
4. If replacement of the primary incumbent is necessary (for example, PCS, permanent change of assignment, etc.), the replacement may also be authorized an active FAC/FSC code, provided the overlap is not more than 30 days. (Reference paragraph **1.4.2.1.**)
5. Qualified medical officers assigned to flight surgeon and pilot-physician, when not assigned to an operational flying squadron as a primary line flier, positions.
6. Officers/CEAs assigned to flying positions outside of USAF or duties requiring active flying with foreign services.
7. API 0 and Z identify non-rated/non-CEA positions.

8. Do not assign an API code to separated (FSC P) or retired (FSC R) aircrew members. HARM offices will leave the API block on the AF Form 1887 blank for these individuals.

9. API 9 is for ABMs assigned to: 1) line flying positions, 2) formal flying training programs where the primary duty is operational flying, or 3) OFDA-creditable ground based radar duties.

2.2. Flying Activity Codes. Flying Activity Codes (FAC) detail the active or inactive flying activity for each duty position occupied by rated officers and CEAs (**Table 2.2**).

Table 2.2. Flying Activity Codes (FAC) (See Note below).

Flying Activity Codes	Approval Authority	Explanation
1	**HARM**	**Force.** Officers in API 1, 2, 5, 7, and 9 coded positions not associated with formal flying training.
2	**HARM**	Instructors, supervisors, and students (API 1, 2, 6, 8, and 9) assigned to fly TF coded aircraft or training aircraft assigned to Formal Training Units or equivalent.
3	**HARM**	**Operational Supervisor.** Officers in API 6, 7, or 8 coded positions not associated with formal flying training who actively fly.
4	**AF/A3O-AT**	**Rated Supervisor.** Officers in API 3 or 4 coded positions assigned and performing aircrew duties in direct support of certain Secretary of the Air Force approved flying missions.
5	**AF/A3O-AT**	Officers not assigned to a rated position (API 0) who perform aircrew duties in direct support of certain Secretary of the Air Force approved flying missions.
6	**MAJCOM/A3 (HARM)**	**Excepted Assignment.** Officers not eligible for FAC 1 through 5, whose current assignments require active temporary operational flying. MAJCOM/A3 approves the use of this code. ***EXCEPTION:*** Member's HARM office may assign FAC 6 to permit inactive aircrew to accomplish/maintain currency/qualification/ requalification training prior to reassignment to active flying (while still assigned to an inactive API). Member's HARM office may also assign FAC 6 for members assigned to inactive flying positions but deployed to an active flying slot. See AFI 11-421.
7	**HARM**	**Inactive.** Rated Officers in inactive status (API 3 or 4). ***EXCEPTION:*** UFT students in API 0 positions.
8	**HARM**	**Inactive.** Rated Officers/CEAs performing inflight non-crew or inactive RPA duties.
	AF/A3/5	**Pilot-Physicians.** Awarded by AF/A3/5 based on AF/SG recommendation. AFI 11-405 applies. See also paragraph **2.8.3**.

9	**AF/A3O-AT**	**Other.** Reserved for use only when directed by AF/A3O-AT.
0	**HARM**	Rated officers assigned to non-rated API 0 duties and not involving flying.
A	**HARM**	**Force.** CEAs in API A or G coded positions not associated with formal flying training.
B	**HARM**	Instructors, supervisors, and students (API A, B, or D) assigned to fly TF coded aircraft or training aircraft assigned to formal training units or equivalent.
C	**HARM**	**Operational Supervisor.** CEAs in API B, D or G coded positions not associated with formal flying training who actively fly.
D	**HARM**	CEAs assigned to AETC non-flying formal school position. (API C).
E	**MAJCOM/A3 (HARM)**	**Excepted Assignment.** CEAs not eligible for FAC A, B, C, or D, whose current assignment requires active temporary operational flying. MAJCOM/A3 approves the use of this code. ***EXCEPTIONS:*** Member's HARM office may assign FAC E to permit inactive aircrew to accomplish/maintain currency/qualification/ requalification training prior to reassignment to active flying (while still assigned to an inactive API). Member's HARM office may also assign FAC E for CEAs assigned to inactive flying positions but deployed to an active flying slot. See AFI 11-421.
F	**HARM**	CEAs assigned to OT&E, IOT&E, and FMS positions (API F).
G	**HARM**	**Inactive.** CEAs in inactive status (API C, E, and Z).
H	**AF/A3O-AT**	**Other.** CEAs in 9G100 positions approved for operational or indoctrination flying IAW AFI 11-402. Other use only as directed by HQ USAF/A3O-AT.
Note: Do not assign a FAC to separated (FSC P) or retired (FSC R) aircrew members. For these individuals, HARM offices will leave the FAC block blank on the AF Form 1887.		

2.3. Aviation Service Codes (ASC). ASCs are two-character codes that indicate incentive pay entitlement and flying status. The first character of the ASC is the entitlement status code (ESC) (**Table 2.3**and **Table 2.4**) and identifies Aviation Career Incentive Pay (ACIP), Career Enlisted Flyer Incentive Pay (CEFIP), or Hazardous Duty Incentive Pay (HDIP) entitlement status. The second character is the Flying Status Code (FSC) and identifies the current flying status. The second character is numeric when the flier is disqualified or suspended (see **Table 2.5**) or an alpha character for qualified individuals (see **Table 2.6**). **Figure 2.1** and **Figure 2.2** indicate ACIP and CEFIP entitlement status, respectively.

Table 2.3. ASC First Character (Entitlement Status Code [ESC], Rated Officers).

Entitlement Status Code (First Character)

1	Continuous ACIP (0 to 12 years). A rated or student pilot, navigator, ABM, or observer who has up to 12 years of aviation service.
2	Continuous ACIP (12 to 18 years). A pilot, navigator, ABM, or observer who has from 12 to 18 years aviation service and has performed operational flying duties for at least 8 of the first 12 years of aviation service.
3	Continuous ACIP (18 to 25 years). A pilot, navigator, ABM, or observer who has 18 or more years of aviation service and has performed operational flying/ground-based radar duties for at least 12 of the first 18 years of aviation service. ***Note:*** ABM must have 72 months of operational flying duties. See paragraph **2.5.3.1.1.**
4	Continuous ACIP (18 to 22 years). A pilot, navigator, ABM, or observer who has 18 or more years of aviation service and has performed operational flying/ground-based radar duties for at least 10, but less than 12 years of the first 18 years of aviation service. ***Note:*** ABM must have 72 months of operational flying duties. See paragraph **2.5.3.1.1.**
5	Conditional ACIP (12 to 18 years). A pilot, navigator, ABM, or observer who has from 12 to 18 years of aviation service and who did not perform operational flying duties for at least 8 of the first 12 years of aviation service. This officer must meet DoDFMR flying requirements to be entitled to receive ACIP. (Note)
6	Conditional ACIP (18 to 25 years). A pilot, navigator, ABM, or observer who has completed 18 years of aviation service and did not perform operational flying duties for at least 10 of the first 18 years of aviation service; or a pilot, navigator, or observer who has completed 22 years of aviation service and did not perform operational flying duties for at least 12 of the first 18 years of aviation service. This officer must meet DoDFMR flying requirements to be entitled to receive ACIP. (Note)
7	Continuous ACIP terminated (25 years of aviation service). A rated officer (other than a flight surgeon) who has completed 25 years of aviation service. Officers in this status are not entitled to receive continuous ACIP, but may be entitled to receive conditional ACIP if assigned to operational flying duties and the grade is O-6 or below. General officers assigned to operational flying duties may qualify for HDIP under DoDFMR flying requirements.
8	Conditional ACIP (Medical). A flight surgeon ordered to participate in frequent and regular aerial flights, assigned to duties requiring such participation (API-5 position), and qualifies for conditional ACIP under DoDFMR flying requirements.
9	Conditional HDIP. A non-rated/non-CEA crewmember or operational support member ordered to participate in frequent and regular aerial flights or assigned to parachute duty, and who qualifies for conditional HDIP under DoDFMR flying or jump requirements. ***EXCEPTION:*** RPA sensor operators (1N1XX) are not authorized conditional HDIP.
0	Disqualified, Suspended, or Non-Interference Flier (No ACIP/HDIP authorized). An individual disqualified or suspended from aviation/parachutist service according to AFI 11-402, or a non-aircrew member assigned to non-interference flying duties IAW paragraph **2.10.4** of this instruction.
Note: The DoDFMR flight requirement for conditional status fliers is four hours per month for	

active duty members and two hours per month for Air Reserve Component (ARC) members or pro rata shares. (DoD 7000.14-R, *Department of Defense Financial Management Regulations (FMRs)*, Volume 7A, *Military Pay Policy and Procedures – Active Duty and Reserve Pay*).

Table 2.4. ASC First Character (Entitlement Status Code [ESC], Career Enlisted Aviators).

Entitlement Status Code (First Character)	
A	Continuous CEFIP (0 to 10 years). A CEA who has up to 10 years of aviation service.
B	Continuous CEFIP (10 to 15 years). A CEA who has 10 to 15 years of aviation service and has performed operational flying duties for at least 6 of the first 10 years of aviation service.
C	Continuous CEFIP (15 to 20 years). A CEA who has 15 to 20 years of aviation service and has performed operational flying duties for at least 9 of the first 15 years of aviation service.
D	Continuous CEFIP (20 to 25 years). A CEA who has 20 to 25 years of aviation service and has performed operational flying duties for at least 14 of the first 20 years of aviation service.
E	Conditional CEFIP (10 to 15 years). A CEA who has from 10 to 15 years of aviation service and who did not perform operational flying duties for at least 6 of the first 10 years of aviation service. This crewmember must meet the DoDFMR flight requirement to be entitled to receive CEFIP. (See note)
F	Conditional CEFIP (15 to 20 years). A CEA who has from 15 to 20 years of aviation service and who did not perform operational flying duties for at least 9 of the first 15 years of aviation service. This crewmember must meet the DoDFMR flight requirement to be entitled to receive CEFIP. (See note)
G	Conditional CEFIP (20 to 25 years). A CEA who has from 20 to 25 years of aviation service and who did not perform operational flying duties for at least 14 of the first 20 years of aviation service. This crewmember must meet the DoDFMR flight requirement to be entitled to receive CEFIP. (See note)
H	Continuous CEFIP terminated. A CEA who has completed 25 years of aviation service. This CEA is not entitled to receive continuous CEFIP, but may be entitled to receive conditional CEFIP if assigned to operational flying duties.
Note: The DoDFMR flight requirement is four hours per month for active duty members and two hours per month for Air Reserve Component (ARC) members or pro rata shares (DoD 7000.14-R, *Department of Defense Financial Management Regulations (FMRs)*, Volume 7A, *Military Pay Policy and Procedures – Active Duty and Reserve Pay*).	

Figure 2.1. ACIP Entitlement Status, (Rated Officers).

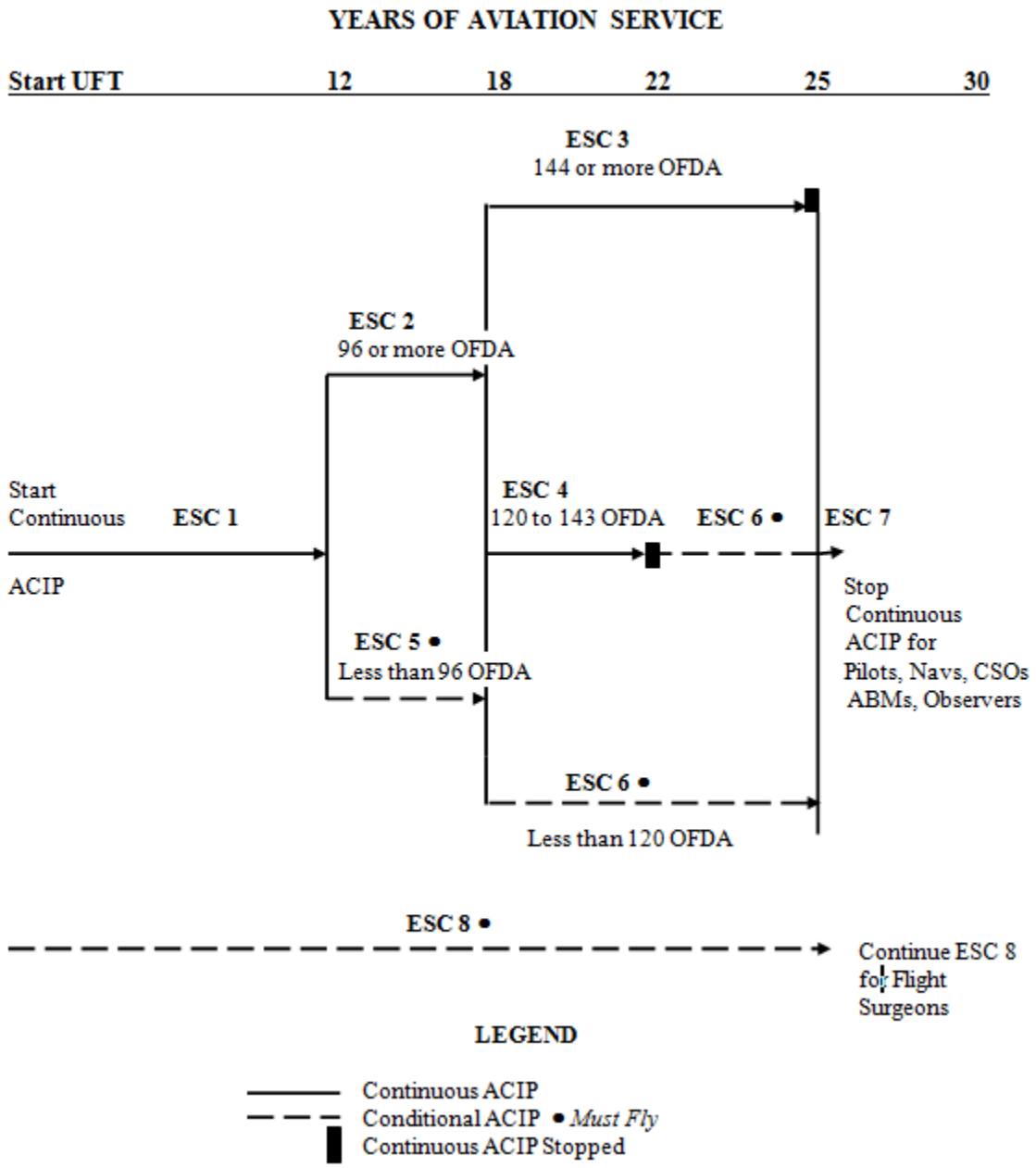

Figure 2.2. CEFIP Entitlement Status (Career Enlisted Aviators).

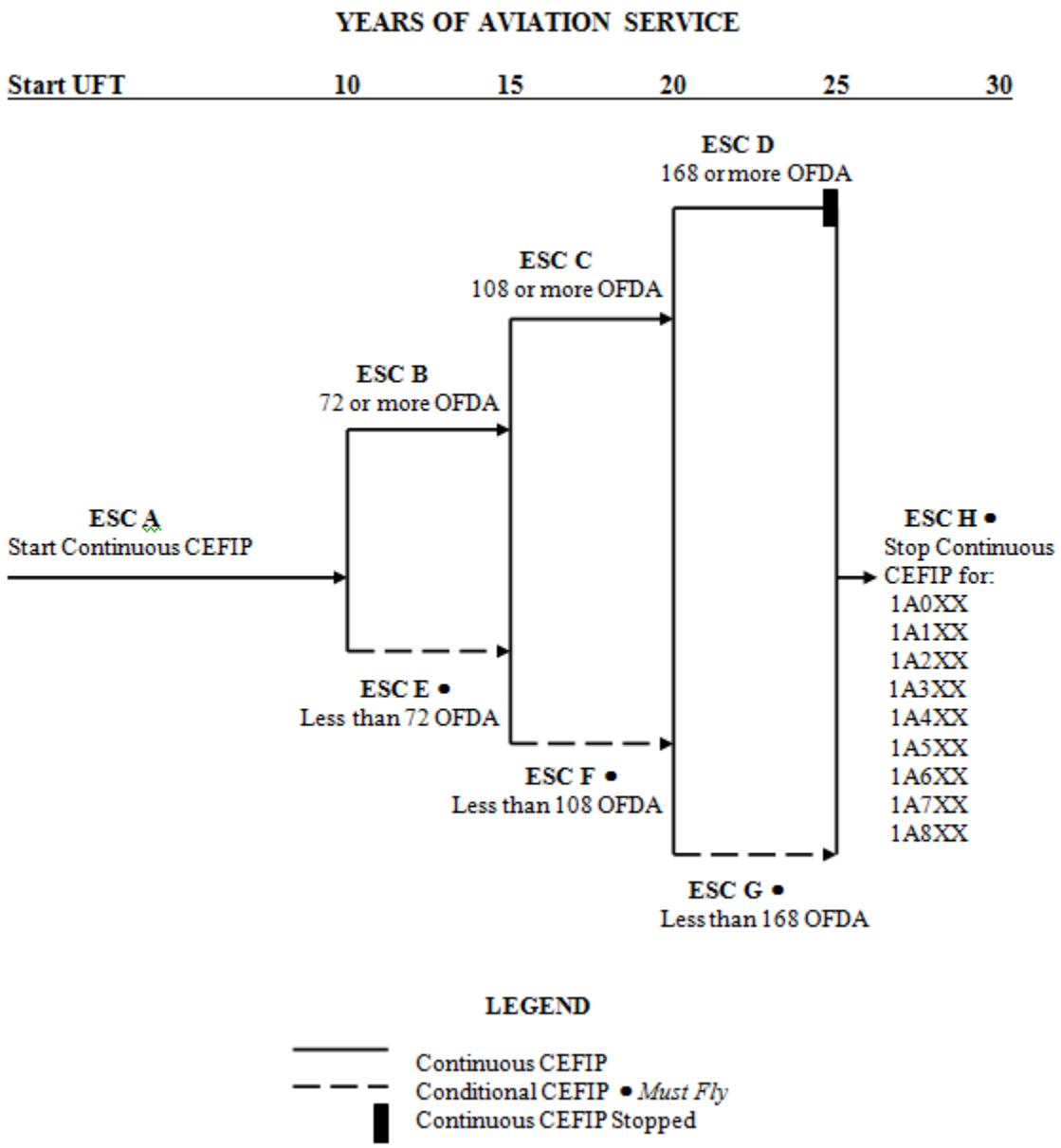

Table 2.5. ASC Second Character (Flying Status Code [FSC], Disqualified or Suspended Status).

ASC Second Character--Disqualified or Suspended Status (as defined in AFI 11-402)	
0	**Disqualified.** Administrative Reasons.
1	**Disqualified.** Fear of Flying.
2	Reserved for future use.
3	**Disqualified.** Medical disqualification.

4	**Suspended.** Permanent disqualification action pending. (HARM office will not assign for more than 180 days without MAJCOM approval.)
5	**Disqualified.** Flying Evaluation Board (FEB), or failure of non-rated/non-CEA aircrew member to attain aircrew qualification.
6	Flying (rated/CEA trainee and operational support) or jump requirement terminated. (Note)
7	**Disqualified**. Failure to maintain medical certification.
8	**Disqualified.** Voluntary request.
9	Air Force Educational Leave of Absence (AFELOA). (Includes excess leave program.)
Note: HARM offices will change a nonrated/non-CEA member's ASC from 9E to 06 when the member is no longer assigned to an authorized jump position (--as applicable, this includes the period during which enlisted parachutists attend Officer Training School). For members in ASC 9D authorized to perform both jump/fly duties and either is terminated, see **Table 2.6.**, Note 5.	

Table 2.6. ASC Second Character (Flying Status Code [FSC], Qualified Active and Inactive Flyer) (Note 1).

A	**Active-Operational Flying.** A rated officer or CEA assigned to operational flying duties (excluding Undergraduate Flying Training students), and aircrew members with approved FAC 4, 5, 6, and E and H waivers.
B	**Active-ABM Ground-Based Radar Duty.** An ABM assigned to OFDA-creditable ground-based radar duties.
C	**Active-Operational Support (Non-crewmember).** An individual required to perform essential in-flight non-crew duties (not considered rated, CEA, or other nonrated aircrew duties) that cannot be performed by an aircrew member in that aircraft's crew complement, IAW AFI 65-503.
D	**Active-Non-rated/Non-CEA Aircrew Member.** A qualified non-rated/non-CEA aircrew member authorized to perform aircrew duties IAW AFIs 65-503, 11-401 and 11-402. (Note 5.)
E	**Active-Parachutist.** A qualified non-rated/non-CEA member assigned to a valid jump DAFSC position, or in training leading to assignment against a valid jump DAFSC position, ordered to perform parachute jump duty. (Note 5.)
G	**Active-Grounded.** An aircrew member assigned to operational flying duties not involving flying for a period anticipated lasting over 30 days. Assignment to FSC G will not preclude reassigning the individual to FSC S when appropriate. (Note 2.)
H	**Inactive-Double Billeted.** Assign FSC H to a rated officer or CEA double billeted against an active staff API 5, 6, 8, B, or D position (see paragraph **1.4.2.1.** and **Table 2.1.,** Note 3). Assign FSC H to nonrated/non-CEA aircrew members double billeted against an active flying position in excess of 90 days. (See AFI 11-402).

J	**Inactive-Restricted.** Assign FSC J to an aircrew member restricted from active flying while assigned to a non-operational flying position (includes FAC 8 fliers.) This action terminates incentive pay entitlement for an aircrew member or parachutist in conditional incentive pay status. (Note 5.)
K	**Inactive-Lack of Support Capability-Restricted.** Aircrew member assigned to an active API who is not flying due to lack of support capability. (See paragraphs **1.3.5., 1.4.1.9.,** and **2.6.4**.)
L	**Inactive-School (Academic).** A crewmember/parachutist assigned to a non-flying/non-jumping course of instruction of lasting 180 days or longer. This action terminates incentive pay entitlement for an aircrew member or parachutist in conditional incentive pay status.
P	**Inactive-Separated.** An active duty or ARC rated officer or CEA removed from aviation service on separation from his or her respective service. (Note 4.)
R	**Inactive-Retired.** An active duty or ARC rated officer or CEA removed from aviation service on retirement from his or her respective service. (Note 4.)
S	**Inactive-Nonperformance.** A rated officer or CEA assigned to operational flying duties (paragraph **2.5.**) who did not accomplish OFDA requirements. (Note 3.) Unit commanders must have MAJCOM/A3T approval for members to remains in "S" status for longer than 180 days (except if member is DNIF). Copy of approval must be sent to the HARM office. Unit commanders must have MAJCOM/A3 approval for a rated officer or CEA assigned to operational flying duties to remain in "S" status for longer than 365 days. Ensure the HARM office receives a copy of the 180-day and/or 365-day "S" status approval, as applicable. ***Note:*** If the member is DNIF for longer than 365 days, see AFI 11-402.
T	**Inactive-Indoctrination Flier.** A rated officer or CEA incumbent assigned to an inactive rated/CEA position (or rated inventory "P" or "N" prefixed DAFSC) in a non-operational flying position approved to fly as an indoctrination flier. Not authorized for API 0 or Z, except as specified in paragraph **2.14.7**.
U	**Active-Flying Training Student (Undergraduate).** A medically qualified officer undergoing flying training leading to the award of an aeronautical rating or a career enlisted aviator undergoing flying training leading to the award of CEA badge.
V	Reserved for future use.
W	**Non-Interference Flier (Non-crewmember)**. Non-rated/non-CEA members, non-crew commanders placed on non-interference AOs IAW paragraph **2.10.4**. Includes RPA Sensor Operators (who hold 1N1XX DAFSC) and other members approved by AF/A3O-AT.
X	**Active-Pipeline.** An Undergraduate Flying Training (UFT) graduate from the date of graduation from pilot, CSO, Air Battle Manager, CEA, or observer training until the sign-in date at the operational duty assignment following completion of formal (Education and Training Course Announcements [ETCA]) primary aircraft training and has not successfully completed mission qualification in an MDS (non-Trainer AETC aircraft) or received an AF Form 8.

Z	**Active-Remotely Pilot Aircraft (RPA) Duties.** Pilot, navigator/CSO, ABM or CEAs (1AXXX or 1UXXX DAFSCs) assigned to an RPA approved by SecAF for OFDA credit and performing operational RPA duties.

NOTES:

1. The FSC indicates if a member is assigned to an active or inactive flying position and the reason for inactivity. Rated members assigned to mandatory rated flying duties must fly in an active status if otherwise qualified. If the unit commander determines that no flying support capability exists for these officers, assign an inactive FSC. All rated aircrew members assigned to non-flying duties or non-rated flying are restricted from active rated flying. MAJCOMs assign support-flying priorities according to paragraph **2.7.** when adequate resources are lacking.

2. ARMS automatically generates an FSC change for ASC G; no AO is required.

3. Do not process non-performance AOs (FSC S) for rated officers after 18 years of aviation service or CEAs after 20 years of aviation service. Refer to AFIs 11-202, Vol 1, and 11-402 flying evaluation board requirement procedures, for members assigned to active flying positions who do not fly for extended periods for reasons within their control.

4. HARM offices will process an AO to assign FSC P or R effective the date of the separation or retirement orders, update ARMS, and terminate flight pay (if applicable). ARC members entering a PAS Code starting with S7 will be assigned FSC P or FSC R upon effective date of orders.

5. When nonrated/non-CEA members are assigned to a dual-coded flying/jump position, assign FSC D. When no longer assigned to the dual-coded jump/flying position, change the member's FSC from D to J. When a member is re-assigned from a dual-coded position to a jump DAFSC (or J prefixed position) only, change the member's FSC to E.

2.4. Operational Flying Duty. Operational flying duty is flying duty performed under competent orders while serving in assignments in which flying skills are maintained in the performance of assigned duties. The FY 1996 *National Defense Authorization Act* established current guidance for months of operational flying duty accumulation (OFDA) required for entitlement to continuous monthly incentive pay for specific years of aviation service. Current legal authority is established in the US Code. **Table 2.7** shows OFDA requirements.

Table 2.7. OFDA Requirements.

Act	OFDA Requirement/Milestone	Entitlement
NDAA of 1996	96 mos (12 yrs of aviation svc) See Note, below.	Continuous ACIP until 18 yrs of aviation service
	120 mos (18 yrs of aviation svc)	Continuous ACIP until 22 yrs from OSD/ASD
	144 mos (18 yrs of aviation svc)	Continuous ACIP until 25 yrs from OSD/ASD

Note: Transition Status Codes were established to track the OFDA requirements for rated officers affected by the *Aviation Career Incentive Act of 1974*, the *Aviation Career Improvement Act of 1989,* and the FY 1996 *National Defense Authorization Act*. TSC A is assigned to all

officers who had less than 6 years of aviation service on 1 October 1991. For additional TSC guidance, reference instructions applicable when member's aviation service date was established. (Historic copies of AFI 11-401 are available from AF/A3O-AT.)

2.5. Rated Officer and Career Enlisted Aviator Operational Flying Duty. To control the award of operational flying duty credit required by public law, HARM offices must assign active operational fliers (FSC A) or ground-based radar duty (FSC B) who fail to perform flying or ground-based radar duty to a temporary status, FSC S (Inactive-Nonperformance) IAW paragraph **2.5.3.4** or **2.5.3.5**. FSC S will remain valid until: the member accomplishes an OFDA-creditable event; is disqualified for Aviation Service; or is reassigned to non-flying duty. Active rated officers and CEAs recommended for DNIF are identified in ARMS by a physical availability date and code. When the DNIF is expected to last more than 30 days or has lasted for 30 days, ARMS automatically reports the member on the Consolidated Headquarters Aviation Resource Management System interface as FSC G. (The FSC G is for reporting purposes only.) An AO change is not necessary. Members continue to accumulate OFDA credit until FSC S applies.

2.5.1. Operational event is flying or ground-based radar duty performed under competent orders by rated or designated members while serving in assignments in which basic flying skills are normally maintained in the performance of assigned duties as determined by the Secretary of the Air Force.

2.5.1.1. Operational flying includes members in training that leads to the award of an aeronautical rating or designation. Rated officers and CEAs must attain and maintain, as a minimum, basic aircraft qualification in mission or support aircraft. One of the following indicates the need to fly:

2.5.1.1.1. The assigned API code associated with a specific position.

2.5.1.1.2. Assignment to a formal course of flying instruction.

2.5.1.1.3. A case-by-case determination by AF/A3O-A when unusual circumstances dictate.

2.5.2. The requirement for the Air Force to track the flying activity of rated members is based on public law. The FY 99 *National Defense Authorization Act* NDAA changed the way ACIP entitlement was computed for all rated officers. Previously, eligibility determination was based on the anniversary of the Officer Service Date (OSD). The FY 99 NDAA changed eligibility determination to the anniversary of the ASD.

2.5.3. OFDA Computations. To receive credit for a month of OFDA, an individual must:

2.5.3.1. Be assigned to primary or corollary duties that require flying or ground-based radar duty and perform valid flying or ground-based radar duty which are authorized OFDA credit in the current month or preceding three months.

2.5.3.1.1. After establishment of an ASD as an ABM and assigned to OFDA-creditable ground based radar duty will receive OFDA credit for those duties. ABMs must fly a minimum of six years (72 months) of aircraft-based operational flying duty

accumulator (OFDA) credit by the 12th year of aviation service to be eligible for continuous ACIP beyond their 12 year gate.

2.5.3.2. Be assigned to rated/CEA in-flight or similar RP duties while assigned FSC A, B, U, X, or Z for at least 15 days within each calendar month that earned OFDA credit from the current month or previous three months. Rated officers or CEA members assigned to an active flying billet pending a PCS assignment to an inactive billet should sign out from the losing base after the 15day of the month in order to receive OFDA credit for that month. They must have also performed OFDA-creditable flying within three months of the departure month.

2.5.3.3. Have no more than 18 years of aviation service for rated officers and 20 years of aviation service for career enlisted aviators. ***Note***: If required, members may accumulate badge-creditable OFDA months toward advanced rating criteria after the 18th or 20th year of aviation service. See AFI 11-402.

2.5.3.4. Individuals initially assigned to flying duty (FSC A) or ground-based radar duty (FSC B)**,** or returning to such duty from a disqualified or inactive status, other than FSC S, receive OFDA credit from the date of assignment of an active FSC. If such individuals do not fly within three months of that date, the HARM office will retroactively change the active FSC to FSC S, effective the day following the date of initial assignment of the active FSC. Deduct OFDA credit which began accruing with assignment of the original active FSC and terminate entitlement to OFDA credit. Assign an active FSC when flying or ground-based radar duty begins, effective two months before the date of the first flight. OFDA credit resumes from that date. ***Example****:* Captain Miller is assigned FSC A on 19 December but first flies on 17 April: On 20 March, the HARM changes the FSC A to FSC S, effective 20 December. Captain Miller accumulated three months OFDA credit for January, February, and March. (Do not credit December because Capt Miller was assigned an active FSC for less than 15 days during that month.) The FSC S action deducts the three months credited and stops further accumulation. On 17 April, change the FSC S to FSC A, effective 17 February. This retroactive change restarts OFDA credit. Do not award OFDA credit for February (less than 15 days assigned), but award credit for March and April. Credit continues to accumulate until the individual fails to perform for a period greater than three months.

2.5.3.5. When aircrew members who are actively flying prior to reaching 18 years (rated) and 20 years (CEA) of aviation service do not perform by the end of the third month following the month in which flying duties were last performed, change FSC to S effective the first day of the fourth month following the month in which flying duties were last performed and stop OFDA credit. Change the FSC to A again effective the date of the member‘s next OFDA-creditable flight. Do not award retroactive credit. ***Example****:* Lt Rochon flew on 14 May and did not fly again until 18 November: The HARM office assigns FSC S on 1 September. Credit OFDA for May, June, July, and August. The HARM office changes the FSC back to A on 18 November. There is no OFDA credit for November because the member was assigned FSC A for less than 15 days during that month. OFDA credit is not earned in September and October.

2.5.3.6. Unit commanders will notify the servicing HARM office when an ABM assigned to OFDA-creditable ground based radar duties prior to reaching 18 years of

aviation service does not perform crew duties by the end of the third month following the month in which crew duties were last performed. HARM office personnel will change the member's FSC to S effective the first day of the fourth month following the month in which crew duties were last performed and stop OFDA credit. Change the FSC to B effective the date the member resumes crew duties. Do not award retroactive credit.

2.6. OFDA Waivers. Operational flying duty requirements for officers and CEAs are established by public law. IAW AFI 36-2110, *Assignments*, it is Air Force policy that as many rated officers as possible complete at least 10 years (120 months) of operational flying by the 18th year of aviation service, however not all officers will fulfill the requirements to receive ACIP through 25 years of aviation service. For CEAs, Air Force policy is to manage CEAs to complete at least 9 years (108 months) of operational flying by the 15year of aviation service; not all CEAs will fulfill the requirements to receive CEFIP through 25 years of aviation service. The Secretary of the Air Force (SECAF) may waive OFDA requirements for rated officers and CEAs who are unable to meet their flying requirements due to reasons beyond their control. Each year, MAJCOM commanders may submit nominations for Lieutenant Colonels and below and SMSgts and below to AF/A3O-AT, for Colonels (and selectees) to AF/DPO, and for CMSgts (and selectees) to AF/DPE, for review and staffing to SECAF. To implement this program the following procedures apply:

2.6.1. Rated officers and CEAs are eligible for OFDA waiver consideration.

2.6.1.1. Rated officer candidates must have at least 72 months (6 years) of OFDA credit to apply for a waiver.

2.6.1.2. CEA candidates must accomplish at least 60 months (5 years) of operational flying during the first 10 years of aviation service, or 96 months (8 years) of operational flying duties during the first 15 years of aviation service to apply for a waiver.

2.6.1.3. Officers and CEAs who have not accumulated the minimum number of months shown above are not eligible for waiver consideration.

2.6.1.4. In addition to meeting established criteria in this section (paragraph **2.6**), an ABM must have an established ASD and be eligible to receive ACIP.

2.6.1.5. By direction of the SECAF, third gate waivers, for individuals to receive ACIP or CEFIP through 25 years of aviation service when OFDA requirements have not been met, will not be considered.

2.6.1.6. Retroactive waivers may be approved for rated officers who obtain 72 months of OFDA credit after the 12th year of aviation service. Members will be authorized continuous entitlement to ACIP from the month in which they completed 72 months credit. (Members are not qualified for continuous entitlement prior to meeting qualification requirements.) ***Example:*** Major Standish reached her 12th year of aviation service on 18 January 09 and had accumulated 60 months of OFDA credit, 36 months short of the 12 year requirement, and was assigned ASC 5A, conditional entitlement status. Effective 17 January 10 she accumulated 72 months of OFDA and applied for a waiver of her 12th year requirement on that date. SECAF approved an OFDA waiver on 15 June 10 and Major Standish's HARM office was directed to publish an AO changing Major Standish's ASC from 5A to 2A and start continuous ACIP effective 17 January 10. ***Note:*** CEAs are not eligible for retroactive waivers.

2.6.1.7. For OFDA waiver requests submitted from the MAJCOM or equivalent, and approved by SECAF prior to loss of continuous pay, members will be authorized continuous entitlement to ACIP or CEFIP from the requirement anniversary date (if otherwise qualified).

2.6.1.8. For OFDA waiver requests submitted from the MAJCOM or equivalent, and approved by SECAF after the loss of continuous pay, members will be authorized entitlement to ACIP or CEFIP from the date the member submitted the original request to the first office in the member's MAJCOM or equivalent chain of command (if otherwise qualified).

2.6.2. MAJCOM commanders may submit OFDA waiver nominations only when the member failed to achieve requirements due to reasons beyond his or her control. Examples include, but are not limited to: banked UPT graduates, extended DNIFs, rated officers assigned to deactivating/draw down flying units or Air Liaison Officer assignments who cannot be placed into another flying position prior to completion of 120 months of OFDA credit at 18 years of aviation service, rated officers assigned to non-flying duties necessary to comply with the requirements of the Goldwater-Nichols Act (joint duty schools/follow-on tours) or the Acquisition Public Law, and CEAs assigned to inactive flying billets to perform RPA sensor operator duties.

2.6.2.1. Officers and CEAs selected for highly competitive and nominative assignments merit OFDA waiver consideration, when those assignments are specifically responsible for rated officers and CEAs failing to accomplish OFDA requirements. Should such assignments jeopardize the achievement of OFDA requirements, place appropriate documentation in the member's personnel record. Documentation will include reasons why the member was assigned to a non-flying position (see paragraph **2.6.6**).

2.6.2.2. Waiver packages are considered on a case-by-case basis, to include objective and subjective assessment of the member's request. Eligibility for waiver consideration does not ensure waiver approval.

2.6.3. Rated officers receiving acquisition bonus monies may not be eligible for OFDA waivers.

2.6.4. Months lost due to time spent under flying status code K (Inactive--lack of support) do not meet OFDA waiver criteria unless the officer or CEA was assigned to a unit undergoing draw down or conversion to an aircraft in which the individual's specialty was not required, or when the unit aircraft was operationally grounded (paragraph **1.3.2**). Individuals must meet both K code and draw down, conversion, or grounding criteria to be considered for a waiver. ***EXCEPTION:*** Members in active flying/ground-based radar assignments assigned flying status code K while deployed TDY to non-flying assignments IAW **Table 2.6** are eligible for waiver consideration.

2.6.5. Individuals who voluntarily turn down a flying opportunity or elect to move to a non-flying position which would preclude the possibility of meeting OFDA requirements are not eligible for OFDA waivers (except as may be provided for in paragraph **2.6.2.1**).

2.6.5.1. When an individual declines an opportunity to fly and is selected for a non-flying assignment, document this action in the member's personnel record, as specified in paragraph **2.6.6** Reference the flying assignment that was declined.

2.6.6. AFPC, HQ USAF, or MAJCOM assignment officers, as applicable, will document situations that exist at the time of assignment which may preclude a member from meeting OFDA requirements, to establish an audit trail. (MAJCOMs will verify flying status code K criteria.) Documentation may be used to verify why OFDA waiver candidates were unable to accomplish OFDA requirements.

2.6.7. MAJCOMs are responsible to ensure each individual eligible for an OFDA waiver is considered for a waiver.

2.6.7.1. Submit OFDA waiver requests to the servicing HARM office no earlier than the year prior to loss of flight pay.

2.6.7.1.1. HARM offices will staff requests to the MAJCOM.

2.6.7.1.2. For members not assigned to an Air Force MAJCOM (i.e. members assigned to organizations such as USCENTCOM, USPACOM, or USSTRATCOM), individuals will submit packages to their servicing Air Force HARM office, which will staff packages to the MAJCOM that is in the HARM office's chain of command.

2.6.7.1.3. For members assigned to Headquarters, USAF, submit waivers through the individual's supervisory chain of command (A1, A3, A4, etc.), then to A3O-AT, DPO, or DPE.

2.6.7.2. HARM offices will review OFDA packages for accuracy, ensure all required items are included, and validate eligibility criteria IAW this instruction. For members assigned to Headquarters, USAF, members will provide required items (listed below). HAF members may contact the AF/A1 staff or AF/A3O-AT to validate eligibility for waiver consideration.

2.6.7.2.1. OFDA waiver request packages will include the member's dated request letter, Aviation Service Worksheet, justification for OFDA request, Military Personnel Data System duty history (SURF), and any other documents necessary to support justification.

2.6.7.2.2. MAJCOMs will coordinate with AFPC (N/A for ARC personnel) to ensure support for packages when waivers are based on assignment actions. For HAF members, the AF/A1 staff will accomplish AFPC coordination.

2.6.7.2.3. It is the responsibility of the member submitting the OFDA waiver request to establish adequate justification for waiver consideration.

2.6.7.3. Packages forwarded to HAF for SECAF approval must contain MAJCOM/CC (or equivalent) or HAF (2-letter or equivalent in the member's chain of command) indorsement. Forward OFDA waiver nominations for Lieutenant Colonels and below and SMSgts and below to AF/A3O-AT, for Colonels (and selectees) to HQ AF/DPO, and for CMSgts (and selectees) to AF/DPE. If submission is not warranted, MAJCOM commanders/equivalents or HAF senior officers may deny requests.

2.6.7.3.1. Prior to MAJCOM commander/HAF senior officer approval, MAJCOM/HAF POCs may send OFDA waiver packages to AF/A3O-AT, AF/DPO, or AF/DPE for an informal review; however, POCs will accomplish the initial review prior to submitting packages to HAF offices.

2.6.8. AF/A3O-AT, AF/DPO, or AF/DPE will verify that packages meet eligibility criteria. AF/A3O-AT (or AF/DPO/DPE) and AF/A1 staff representatives will review packages. If all offices concur, nominations will be forwarded through the HAF chain of command to SECAF for consideration for an OFDA waiver. Packages that do not meet eligibility criteria will be returned to the MAJCOM. Waivers will be approved only for the minimum months required.

2.6.8.1. Individuals who receive an OFDA waiver are not eligible for a second OFDA waiver. For individuals who receive waivers, the specific eligibility requirement is waived for the minimum extent necessary for that individual; members are not granted additional months of OFDA credit.

2.7. Taking Part in Flying by Rated Officers. Public law and DoD directives restrict active rated flying to officers in positions that require members to maintain flying skills.

2.7.1. Flying duties are assigned in the following precedence:

2.7.1.1. API 1 or 2 officers assigned to support the weapon system crew ratio.

2.7.1.2. Student officers assigned to a formal course of flying training.

2.7.1.3. Officers assigned to positions coded API 6 or 8.

2.7.1.4. Officers assigned to positions at MAJCOM or FOA level or below coded API 3 or 4, or non-rated (API 0). Assign such officers to rated aircrew duties on the basis of the most recent aviation service date, if:

2.7.1.4.1. The assignment provides at least 24 months of local flying availability (12 months at short tour bases).

2.7.1.4.2. The flying assignment is to an approved operational support mission specifically designated by HQ USAF.

2.7.1.5. Rated officers will not perform flying duties during periods of non-flying TDY, permissive TDY, or while on leave. ***EXCEPTION:*** ARC members on terminal leave from active duty, who are otherwise eligible to fly, may perform flight duties.

2.7.1.6. Officers (excluding the primary aircrew) accomplishing orientation flights fly in passenger status and will not perform flying duties.

2.7.2. Special Circumstances.

2.7.2.1. If special circumstances require active temporary operational flying that is not IAW paragraph **2.7.1**, MAJCOM/A3 may approve exceptions on an individual case basis (FAC 6/E waiver). See **Table 2.2**

2.7.2.2. If special circumstances require rated officers to perform temporary in-flight non-rated or non-crew (operational support) duties, HARM offices will assign FAC 8. For rated officers who were in inactive status, publish an AO assigning FAC 8, FSC J, and include in the remarks section of AO: “Rated Officer assigned to perform in-flight non-rated (or non-crew) duties.” Officers performing non-rated duties will log aircrew certification code Z on the AFTO Form 781; flight time does not count towards OFDA or ACIP entitlement.

2.7.3. Do not assign active flying duties to members scheduled for an academic instruction course of 180 days or longer. The HARM office will assign FSC L to these members. (See also **Table 2.6**.)

2.7.4. Reserve officers not on extended active duty (EAD) may be assigned to inactive rated positions (API 3 or API 4).

2.7.4.1. Send requests for removing Reservists from flying to AFRC/A3TB (with copies to AF/REO and AF/A3O-AT) for approval.

2.7.4.2. Send requests for removing ANG personnel from flying to NGB/CF (with a copy to AF/A3O-AT) for approval.

2.7.5. Rated officers assigned to API 0 billets may fly on a non-interference basis when required. Incentive pay and OFDA credit are not authorized for non-interference flying. Members will not log flying time on the AFTO form 781. (See also paragraph **2.10.4**).

2.8. Flight Surgeon, Pilot-Physician, and Critical Care Air Transport Team Flying Policy.

2.8.1. To be assigned to active flying status, a flight surgeon must be medically qualified, physiologically qualified (if applicable), and maintain flight medicine credentials. To receive conditional ACIP, active flight surgeons must be assigned to an API 5 unit manpower document (UMD) position with Duty Air Force Specialty Code (DAFSC) 48XX, or 40C0C with an additional AFSC of 48XX, be on active flying status AOs, and be qualified in the aircraft. IAW DoD FMR 7000.14-R, Volume 7a, *Military Pay Policy and Procedures - Active Duty and Reserve Pay*, flight surgeons are conditional fliers and qualify for entitlement to conditional ACIP by completing the prescribed number of operational flying hours per month.

2.8.1.1. Commanders may authorize inactive flight surgeons to fly and log time without ACIP on a noninterference basis with unit training and flying schedules. Flight surgeons not qualified in an aircraft, on inactive AOs, will log only "Other" flight time and include remarks on the reverse side of AFTO Form 781 (for example, "Inactive flight surgeon," or "Flight surgeon not qualified in aircraft"). Paragraphs **2.14.3** and **2.14.5** apply.

2.8.1.2. When a flight surgeon is assigned to an API 0 position, the HARM office will terminate active flying AOs and assign the member ASC 8J. Paragraph **2.14.7** applies.

2.8.2. A flight surgeon possessing an additional pilot or navigator rating and assigned to an API 5 flight surgeon position flies only as a flight surgeon, unless selected and approved as a pilot-physician or navigator-physician IAW AFI 11-405, *The Pilot-Physician Program*. Pilot-physicians/navigator-physicians assigned to active flying positions (API 1/2) fly as line pilots/navigators. AF/A3/5 authorizes exceptions upon request, based on justification provided by the Surgeon General (AF/SG). Flight surgeons who hold valid pilot or navigator ratings are entitled to conditional ACIP only; OFDA credit is not authorized, even when members are assigned to API 1/2 positions.

2.8.3. **Pilot-Physicians Procedures.** AFI 11-405 prescribes procedures for the US Air Force Pilot-Physician Program. Pilot-physicians remain conditional fliers for ACIP entitlement and do not earn OFDA credit. Except as noted above, active flying pilot-physicians will be assigned ASC 8A, FAC 9, and API 5, and hold DAFSC 48VX. Retain members in ASC 8 beyond 25 years of aviation service. Credit flight time logged as a pilot

towards advanced pilot and flight surgeon ratings (only when member is assigned FAC 9) and ACIP entitlement.

2.8.4. **Critical Care Air Transport Teams (CCATT) Procedures.** Active and inactive flight surgeons may be tasked to assist CCATTs with patients on a mission.

2.8.4.1. Active flight surgeons assigned to API 5 positions, with ASC 8A, are authorized to log crew position "FS" and primary time on all USAF aircraft missions based on their aircraft qualification.

2.8.4.2. Inactive flight surgeons assigned to API 0 positions, in ASC 8J and tasked to perform CCATT non-crew duties, are authorized to log "FZ" crew position and primary time on these missions. Flight time may only be logged when critical care patients are onboard. When authorized, the member's HARM office will process the operational support AO. Assign FAC 8, and include AO remarks: "Rated officer tasked to perform CCATT non-crew FAC 8 duties. Crew position FZ and non-crew HDIP authorized." The member's ASC remains ASC 8J.

2.8.5. Flight surgeons, pilot-physicians, and CCATT personnel will not perform flying duties during periods of non-flying TDY, permissive TDY, or while on leave. ***EXCEPTION:*** ARC members on terminal leave from active duty, who are otherwise eligible to fly, may perform flight duties.

2.8.6. Members accomplishing orientation flights fly in passenger status and will not perform flying duties.

2.9. Taking Part in Flying by Career Enlisted Aviators.

2.9.1. Flying duties are assigned in the following precedence:

2.9.1.1. API A or B CEAs assigned to support the weapon system crew ratio, flying training instruction duty, operational test and evaluation functions, Foreign Military Sales (FMS), etc.

2.9.1.2. Students assigned to a formal course of flying training.

2.9.1.3. Career enlisted aviators assigned to positions coded API B or D.

2.9.1.4. Career enlisted aviators assigned to positions at MAJCOM or FOA level or below coded API C or E. Assign career enlisted aviators API C or E aircrew duties on the basis of the most recent aviation service and be careful not to cause the member to fall short of meeting OFDA credit.

2.9.2. Do not assign active flying duties to members who are scheduled for an academic instruction course of 180 days or more.

2.9.3. Career enlisted aviators will not perform flying duties during periods of non-flying TDY, permissive TDY, or while on leave. ***EXCEPTION:*** ARC members on terminal leave from active duty, who are otherwise eligible to fly, may perform flight duties.

2.9.4. Career enlisted aviators (excluding the primary aircrew) accomplishing orientation flights fly in passenger status and will not perform flying duties.

2.9.5. If special circumstances require active temporary flying that is not IAW paragraph **2.9.1**, MAJCOM/A3 may approve exceptions on an individual case basis (FAC E waiver).

2.9.6. CEAs assigned to API-Z billets may fly on a non-interference basis when required. Incentive pay and OFDA credit are not authorized for non-interference flying. Members will not log flying time on the AFTO Form 781. (See also paragraph **2.10.4**).

2.10. Taking Part in Flying by Non-rated Officer Aircrew Members and Non-CEA Enlisted Aircrew Members.

2.10.1. Non-rated officer and non-CEA enlisted aircrew members (FSC D) are qualified personnel assigned to designated aircrew positions. Non-rated/non-CEA aircrew members are included onboard aircraft when their presence is required for the aircraft to accomplish its primary tasked mission. This is their full-time duty. When a full-time presence is not required, operational support flying may be applicable (see paragraph **2.10.2**). Non-rated/non-CEA aircrew members will maintain flying class III physicals.

2.10.1.1. Non-CEA enlisted aircrew members require an aircrew prefix of X (Basic Aircrew), K (Instructor), or Q (Evaluator).

2.10.1.2. Non-rated officer aircrew members may be assigned to duty positions with an AFSC prefix of X (Basic Aircrew), B (Squadron Operations Officer), C (Commander), F (Flight Test), K (Instructor), or Q (Evaluator).

2.10.1.2.1. When a non-rated officer aircrew member and/or parachutist is assigned to an authorized X or J (Jump) prefixed UMD position which is also a Commander (C prefix) or a Squadron Operations Officer (B prefix) position, the C/B prefix does not remove the authorization to fly or jump. Place the following remark on the individual's AO: "Member occupies an X (or J) prefix UMD position."

2.10.1.2.2. FSC J (Inactive) or L (TDY School) identifies aircrew members not assigned to active flying positions. AOs terminate authorization to fly and entitlement to incentive pay.

2.10.2. FSC C (Operational Support) identifies non-rated/non-CEA personnel required to perform essential inflight duties that cannot be accomplished by rated officers, CEAs or non-rated aircrew members. Operational Support fliers may be required to perform flight duties on an occasional basis. However, their assigned full-time duties do not require them to be onboard the aircraft to accomplish its assigned primary mission. When the requirement to fly terminates, flight record responsibility ends. Authorized man-months are required prior to issuance of AOs. Process requests for operational support flying IAW AFI 11-402.

2.10.3. Aerospace physiologists (DAFSC 43AX), Human Performance Training Teams (DAFSC 4M0X1), and non-aircrew aerospace medicine personnel(DAFSCs 42GX and 4N0XXs) are authorized to participate in aircraft flights as observers on a noninterference basis. HARM offices will publish AOs according to this instruction and MAJCOM directives. Neither ACIP entitlement nor OFDA credit are authorized. Personnel who provide high altitude airdrop mission support qualify for Hazardous Duty Incentive Pay (HDIP). Paragraphs **2.14.3** and **2.14.5** apply. Personnel who fly in support of high altitude airdrop missions will comply with AFI 11-402.

2.10.4. Other non-rated/non-CEA personnel who fly occasionally to perform specific tasks (e.g., administrative duties, evaluation of equipment, maintenance, passenger escort, security for classified documents, crew chiefs who perform duties on the ground at the final

destination or points enroute and other duties not authorized as operational support IAW AFI 11-402) may have AOs published according to this instruction and MAJCOM directives. Individuals in these categories will fly on a non-interference basis. Neither flying incentive pay nor OFDA credit is authorized. Paragraphs **2.14.3** and **2.14.5** apply.

2.10.4.1. Members who fly on non-interference AOs will not be placed on the AFTO Form 781 (see paragraph **1.6.2.2**), except for those members specified in paragraph **3.2.1.5.2**

2.10.4.2. Non-Aircrew personnel who fly occasionally to obtain familiarity with the flying environment or directed to perform specific inflight duties on an infrequent or irregular basis (Commanders [including unit commanders], Operations Officers, and supervisory personnel) may do so under the guidelines of paragraph **1.6** Non-aircrew members assigned to flying unit commander positions may log flying time IAW paragraph **3.2.1.5.2**

2.10.5. Aircrew members not formally entered into Initial Qualification Training will fly under orientation flight guidelines for familiarization flights IAW paragraph **1.9.4.7.1.2**

2.10.6. Members will not perform flying duties during periods of non-flying TDY, permissive TDY, or while on leave. ***EXCEPTION:*** ARC members on terminal leave from active duty, who are otherwise eligible to fly, may perform flight duties.

2.10.7. Members participating in orientation flights fly in passenger status and will not perform flying duties.

Section 2B—Supervisory Operational Flying Positions

2.11. Supervisory Position Criteria. To conserve available resources, clearly identify rated officers and CEA supervisory positions (API 6, 8, B, or D) that require the incumbent to actively fly.

2.12. Supervisory Flying.

2.12.1. Rated officer and CEA supervisory flying is necessary to ensure that appropriate rated staff officers maintain a current and comprehensive background in the overall flying operations of the organization.

2.12.2. Perform supervisory flying to the maximum extent possible in primary mission aircraft inventory (PMAI) associated with the position.

2.12.3. Commanders (including unit commanders) authorized to designate rated and CEA supervisory positions must minimize the impact of such flying and designate API 6, 8, B, or D positions only when active flying is essential for mission accomplishment. Designating authorities are:

2.12.3.1. **General Officer.** The Chief of Staff designates general officer operational flying positions. Requests for a change of general officer flying status will be submitted to AF/A3/5. AF/A3/5 will coordinate changes with AF/DPG. All requests for general officer operational flying training must be coordinated with AF/DPG. See **Table 2.8** for general officer flying authorizations. See paragraph **2.14.1** and **Table 2.9** for additional guidance on general officer indoctrination fliers.

2.12.3.2. **Colonel.** MAJCOMs designate colonel active flying positions (API 6/8) by forwarding AF Form 480, *Aircrew AFSC/Active Flying Justification*, to AF/DPO for review and approval (see AFI 38-201, *Determining Manpower Requirements*). Colonel flying positions will be limited to individuals who directly supervise aircraft flying operations, flight safety, standardization/evaluation programs, and operational readiness inspection programs. Should positions not warrant full time flying, there may be justification for the individual to participate in the indoctrination flying program.

2.12.3.3. **Lieutenant Colonel and Below.** MAJCOMs designate Lt Colonel-and-below rated officer and CEA positions that require active flying IAW AFI 38-201. If the position requires an AF Form 480, provide justification for flying on the form. Normally, API 8/D positions (NAF/FOA/DRU/MAJCOM) are authorized only in safety, inspector general, and standardization/evaluation functional areas in which flying is a requirement associated with the position. On occasion, justification may exist for an aircrew member to fly while in inactive status; see paragraph **2.14**

Table 2.8. General Officer Flying Positions.

The following general officer positions are authorized operational or indoctrination flying positions (as shown) when filled by USAF general officers. Individuals flying operationally must accomplish Form 8 qualification to include instrument qualification and must maintain a minimum of BAQ status.		
Organization	**Position**	**Authorization**
Joint Chiefs of Staff	Chairman	Indoctrination Flying
	Vice Chairman	
Combatant Commands	Commander	As determined by the Commander (Note 1)
	Deputy Commander	Indoctrination Flying
	AFCENT/CC	
	Special Operations Component Commanders assigned to Combatant Commands	
HQ USAF	Chief of Staff	Note 2 Applies
	Vice Chief of Staff	Indoctrination Flying
	Assistant Vice Chief of Staff	

	AF/A1 AF/A2 AF/A3/5 AF/A3O AF/A4/7 AF/A8 AF/SE SAF/AQ SAF/IG	
	AF/SG (When position is filled by a pilot-physician)	Indoctrination Flying
AFDW	Commander	Indoctrination Flying
ACC, AETC, AFGSC, AFMC, AFRC, AFSOC, AFSPC, AMC, PACAF, USAFE	Commander	Operational Flying (Note 3)
NGB	Chief*	Operational Flying
NGB	Deputy Director*	(Indoctrination Flying)
*NGB/CF <u>or</u> the Deputy NGB/CF may fly operationally (single operational flying authorization)		
ACC, AETC, AFGSC, AFMC, AFRC, AFSPC, AMC, PACAF, USAFE	Vice Commander	Indoctrination Flying (Note 3)
AFSOC	Vice Commander	Operational Flying (Note 3)
ACC, AETC, AFGSC, AFMC, AFRC, AFSPC, AMC, PACAF, USAFE	Operations Director (A3)	Operational Flying (Note 3)
AMC	Deputy Operations Director (DA3)	Operational Flying (Note 3)
ACC, AFGSC, AFRC, AFSOC, AMC, ANG, PACAF, USAFE	Numbered Air Force Commander	Operational Flying (Note 3)
AETC	Commander, 19 AF	Operational Flying (Note 3)
ACC, AFGSC, AFRC, AFSOC, AMC, PACAF, USAFE	Numbered Air Force Vice Commander	Indoctrination Flying (Note 3)
ACC, AETC, AFGSC, AFRC, AFSOC, AMC, ANG, PACAF, USAFE	Wing Commander (Note 4)	Operational Flying
ACC	Commander, AFWC	Operational Flying (Note 3)
	DCFACC	

AETC	Commander, AU (AU/CV when AU/CC does not fly)	Operational Flying (Note 3)
AFMC	Commander, AAC Commander, AFFTC	Operational Flying (Note 3)
AFOTEC	Commander	Operational Flying
AMC	Commander, AMWC Commander, EMTF	Operational Flying (Note 3)
	PAG/CC (Note 3 N/A)	
USAFA	Commander	Operational Flying
	Commandant of Cadets	
USAFE	3 AF/CVA	Operational Flying (Note 3)
NATO	E-3A Comp/CC	Operational Flying

NOTES:

1. Combatant Commanders may determine their flying status, based on requirements. Notify AF/A3/5 of status, with info copy to AF/A3O-AT and AF/DPG.

2. The Chief of Staff will determine the status of the AF/CC position.

3. MAJCOMs may determine the flying status of general officers assigned within their command, utilizing the available AF/CC-approved operational positions within the command. This option applies to all approved operational flying positions above wing commander. Current approved positions are shown in **Table 2.8** with most recent HAF authorized status (***Note:*** May not reflect actual status if a MAJCOM change has been made). If a change is made, notify AF/A3/5 with an info copy to AF/A3O-AT and AF/DPG.

4. Wing Commander applies to commanders of flying wings (and includes expeditionary flying wings). Air base and support wing commanders are specifically excluded.

5. Current list of approved general officer operational flying positions is maintained on file in AF/A3O-AT. AF/A3O-AT maintains records of approval for all general officer operational flying positions.

6. Individuals in authorized O-6 operational flying positions who have been selected for promotion to the grade of Brigadier General may continue to fly operationally while assigned to the O-6 flying position.

2.13. Supervisory Position Limitations. MAJCOMs will establish procedures to review API 6, 8, B, and D supervisory flying positions when incumbents are assigned FSC K (lack of support) and when adequate support will not be available within six months. Where practical, convert such positions to API 3, 4, C or E.

2.14. Indoctrination Flying. Rated officers and CEAs in inactive status who are required to perform operational flying on a temporary basis to complete a specific official task (for example,

to evaluate an operational flying procedure, review flying training effectiveness, take part in a flying exercise or test program, or become familiar with a specific operational weapon system and procedure) may be authorized indoctrination flying status. The following policy applies:

2.14.1. MAJCOMs (or MAJCOM equivalents) select and authorize rated staff and CEA positions for indoctrination flying. Indoctrination flying allows inflight observations of mission equipment or procedures that will benefit the organization. Incumbents must request to fly. Take a conservative approach in designating these positions. MAJCOMs (or MAJCOM equivalents) will establish procedures for approval of indoctrination flying in accordance with **Table 2.9** MAJCOMs will identify the incumbent by assigning FSC T. MAJCOMs may not increase the number of general officer indoctrination fliers without AF/CC approval.

2.14.2. MAJCOM commanders must approve the use of command aircraft resources to support indoctrination flying for personnel outside their commands. Authorization may be delegated, but not lower than MAJCOM level.

2.14.3. MAJCOMs must ensure individuals complete, before flight, adequate training on emergency procedures, life support equipment, and aircraft systems. Individuals must be physically and, where required, physiologically qualified.

2.14.4. Indoctrination flights in inactive status do not entitle the member to OFDA credit or incentive pay and do not allow authority to change ASCs except to assign FSC T. MAJCOMs will ensure indoctrination flying does not impact unit training, and will not increase command flying hour allocations.

2.14.5. Obtaining or maintaining aircraft qualification while in inactive status is not authorized. Individuals flying in inactive status may not act as pilot in command and flights in single-place aircraft are specifically prohibited. Document indoctrination flights on the AFTO Form 781, *ARMS Aircrew/Mission Flight Data Document* using Other flight time, IAW paragraph **3.3.5**

2.14.5.1. IAW paragraph **1.12.4.3**, general officer pilots in authorized indoctrination flying positions may occupy a pilot's seat with passengers or MEP on board during non-critical phases of flight. During such times a current and qualified instructor pilot will occupy the other pilot's seat. See AFI 11-202, Volume 3, for definition of critical phases of flight.

2.14.6. MAJCOMs may authorize indoctrination flying for individuals assigned to active operational flying positions. Do not change FSC.

2.14.7. Indoctrination flying is not authorized for individuals assigned to API 0 or Z coded positions. ***EXCEPTION:*** MAJCOMs may authorize indoctrination flying for CEAs assigned to 9G100 positions, and for individuals tasked to perform indoctrination flying duties while deployed.

Table 2.9. Indoctrination Flying Approval Authority.

Approval Authority	**for positions in:**
HQ USAF/A3/5	Air Staff, OJCS, OSD, DoD Agencies, Joint Commands, Non-

	Air Force General or Flag Officers, and FOAs (AFRC members see note below)
MAJCOM	MAJCOM
ACC	CENTCOM, JFCOM, and SOUTHCOM
AFSPC	SPACECOM
AMC	TRANSCOM
PACAF	PACOM
USAFE	NATO and EUCOM
NOTES: 1. AF/CC must approve increases for additional general officer indoctrination flying positions. Submit requests to AF/A3/5 with an info copy to AF/A3O-AT. 2. For AFRC members, staff packages through AFRC/A3 for coordination prior to submission to AF/A3/5.	

2.15. Operational Support Aircraft (OSA) and Aircrew Management.

2.15.1. The operational support aircraft and aircrew manager will provide all personnel assigned or attached for flying the opportunity to complete annual flying requirements. Attached personnel must be responsive to scheduling requirements. In line with aircrew requirements, attached personnel will perform assigned missions.

2.15.2. If TDY is authorized solely to perform aircrew duties, budgeting and funding for TDY travel of aircrew members assigned or attached for flying is the responsibility of the unit to which the aircrew member is assigned.

2.15.3. Security Assistance and Defense Attaché aircraft and aircrews.

2.15.3.1. Support aircraft for Security Assistance are assigned to HQ AFMC and placed on loan to the Defense Security Assistance Agency (DSAA).

2.15.3.2. Support aircraft for Defense Attachés are assigned to HQ AFMC and placed on loan to the Defense Intelligence Agency (DIA).

2.15.3.3. Using organizations must comply with the theater air component command/lead command rules and instructions that pertain to aircraft operations. Crew qualification, currency, training, and evaluations are the responsibility of the theater air component/lead command commander, as applicable, and will be conducted according to HQ USAF guidance and theater requirements. Operational control (as it pertains to the missions and purposes for which the aircraft are operated) and scheduling of aircraft remains within the using organization.

Section 2C—Support of Personnel Assigned to Locations or Organizations Lacking Flying Facilities or Aircraft

2.16. Attachment for Flying/Parachuting.

2.16.1. Aircrew/parachutist members assigned by PCS/PCA orders to active flying/parachutist positions in US Air Force units and organizations without flying facilities or aircraft may be attached for flying/parachuting to units with appropriate resources. Intra-wing attachments may be approved by the OG/CC. Individuals must request (in writing) attachment for flying/jumping through their chain of command to their MAJCOM or equivalent. (***EXCEPTION:*** Request for attachment for flying/parachuting is not required if flying/parachuting support and a primary unit/aircraft is addressed in a host-tenant agreement. Members will provide required information to the servicing HARM office.) Approval authority may be delegated as directed by MAJCOMs.

2.16.1.1. Request for attachment must include: Individual's name, rank, Social Security Number (SSN), aviation service date (ASD), aviation service code (ASC), aeronautical rating (or badge), expected duration of attachment, date of separation (DOS)/expiration of term of service (ETS), assigned duty position title/position number/API code, aircraft last qualified in, date last flown, current AO, current AF Form 1042, and requested unit of attachment and point of contact. (Parachutists need only provide information applicable to parachuting.) Individuals should coordinate flying/parachute qualification, currency and attachment with requested units prior to submitting formal request.

2.16.1.2. MAJCOMs will develop procedures for attachments within the MAJCOM. For attachments outside an individual's MAJCOM, submit the request to both MAJCOMs (or equivalent) for coordination. For attachments outside the USAF, submit the request to the gaining unit's MAJCOM equivalent approval authority and the individual's parent MAJCOM (or equivalent) approval authority for coordination.

2.16.2. Attachment units will provide resources necessary for the member to complete and maintain minimum training requirements established in applicable aircrew/parachutist training publications, including TDY cost to formal training courses. The unit to which the member is assigned is responsible for cost of the member's TDY travel to the attached unit to accomplish normal training requirements. The attached unit will maintain the FEF.

Section 2D—Flying with Air Reserve Component Units

2.17. Total Force Absorption Program (TFAP) In addition to the guidance provided in this section, aircrew personnel must comply with Total Force Absorption Program (TFAP) guidance contained in AFI 11-412.

2.18. Flying With AFRC Units.

2.18.1. Members of the MAJCOM with oversight responsibility are authorized to fly in AFRC aircraft when participating in operational readiness inspections (ORIs), aircrew standardization and evaluation visits (ASEVs) and higher headquarters evaluation teams on scheduled unit visits. Flying is restricted to missions that support unit training objectives, contingencies or operational missions, to include those that augment or assist in unit conversion.

2.18.2. **Inter-Fly.** AFRC operations group commanders are authorized to approve flights with AFRC units for aircrew members not assigned or attached to an AFRC unit and are the final authority for determining when an active duty/Air National Guard member may fly unit aircraft. Such aircrew members must provide operations group commanders with a source for

validating aircrew qualifications, training and currencies prior to flying. AFRC OG/CCs will forward information copies of interfly agreements to the respective NAF/A3. ***EXCEPTION:*** Those units with an existing written agreement, e.g. TFI/associate units, will follow guidance within the agreement.

2.18.2.1. Interfly agreements may involve the exchange and/or substitution of aircrew members and/or aircraft between different MAJCOM units to accomplish flying in support of contingencies, exercises or designated missions according to the appropriate OPLAN/CONOPS.

2.18.2.2. During situations where interfly may be an option, aircraft ownership does not change. Aircraft hours executed will be credited to the command and unit of assignment of the aircraft regardless of the crews MAJCOM affiliation. Ensure use of correct mission symbol.

2.18.2.3. As a minimum, interfly crewmembers will be qualified/certified in the MDS and model as well as system/configuration required to fly the aircraft and/or mission.

2.19. Flying With ANG Units.

2.19.1. The ANG Wing Commander must concur on all active duty flying with ANG units. Flying is restricted to Air Force advisors and aircrews who support unit training objectives, contingencies, or operational missions to include aircrew that inspect, standardize, augment, or assist in unit conversion. (Individuals will not be listed on the ANG web page since they are not formally attached to an ANG unit for the purpose of obtaining continuation training.) With the deployed commander's concurrence, active duty aircrew attached to Air Warrior, Combat Archer and Combat Hammer are authorized to fly with ANG units.

2.19.2. Active duty flying with ANG units for the sole purpose of continuation training (CT) is prohibited without approval from the ANG Director of Operations (NGB/A3). (Future Total Force [FTF] wings will coordinate active duty CT flying IAW the MAJCOM CONOPS). Forward all requests for active duty CT flying support to NGB/A3 with appropriate ANG Wing Commander and MAJCOM/A3 concurrence. Requests must include: name, rank, office symbol (e.g., 9 AF/DOV), primary aircraft MDS (e.g., F-16C, C-130E), aircrew position (e.g., IP, IN), and reason for requested CT support. A complete list of AD aircrew approved to fly CT sorties with the ANG is available on the NGB/A3O Portal.

2.19.3. Active duty aircrew members authorized to fly ANG aircraft in accordance with paragraphs **2.18.2** and **2.19.2** may coordinate sortie support directly with the unit. Members must provide the supporting unit operations group commander with a source for verifying currencies, egress training, flight qualification, etc., before flying. The supporting unit operations group commander is the final authority for determining when active duty aircrew may fly unit aircraft.

2.19.4. Conduct flying in accordance with applicable US Air Force, lead MAJCOM, and ANG instructions.

2.20. Coordination Authorization. Direct communication with MAJCOMs, AFRC, and ANG concerning attachment of rated personnel is authorized.

2.21. TFI and Associate Units.

2.21.1. For TFI units, there are two separate and distinctly funded flying hour programs. The unit to which the aircraft are assigned has responsibility for oversight and management of both programs.

2.21.2. TFI and Associate units are to use their respective command's mission symbols regardless of crew status (Active/ANG/Reserve).

Chapter 3

FLIGHT DOCUMENTATION

Section 3A—Logging of Flight Activity

3.1. Enter and credit flight time. Enter and credit flight time on an individual's flight record when flown in an aircraft, simulator or controlling an RPA according to this instruction and properly logged on AFTO Form 781 or AF Form 3250. The pilot designated, as "in command" of the aircraft is responsible for making sure the appropriate form is dated and properly completed, to include specific remarks as required.

3.2. Crediting Flight Time. Credit flying time as follows:

3.2.1. To credit flight activity, personnel must:

3.2.1.1. Be physically qualified. The member cannot be in DNIF status and must be medically cleared for flying duty, documented on an AF Form 1042.

3.2.1.2. Be physiologically qualified (if applicable for the aircraft).

3.2.1.3. Be on AOs to take part in frequent and regular flights as aircrew, to obtain aircrew qualification, or as operational support members (IAW AFI 11-402).

3.2.1.4. Be under an approved aircrew qualification code (based on AF Form 8/8a qualification) and aircrew position identifier (**Table A2.3**) designated on the flight authorization for the aircraft. (***EXCEPTION:*** aircrew members authorized to perform inflight duties in non-USAF aircraft, IAW paragraph **1.11**, will comply with guidance applicable to the authority controlling the aircraft in regards to flight authorization requirements.)

3.2.1.5. Be part of the crew complement (AFI 65-503) authorized to perform aircrew duties in the aircraft in order to obtain and maintain aircrew qualification, or be required for the mission.

3.2.1.5.1. Individuals required for the mission who are not part of the crew complement may log flying time only when specifically authorized to perform duties required for the mission (e.g. AEs, CROs, PJs, combat camera, etc), or when specifically authorized to perform mission-related observation or evaluation duties. Members will comply with all other applicable requirements to include medical clearance and physiological training (if applicable).

3.2.1.5.1.1. Commanders will include an explanatory note in the remarks section of the FA for crewmembers that exceed the crew complement but are required for the mission.

3.2.1.5.2. Non-aircrew members assigned to flying unit commander positions may log flying time in assigned aircraft. Individuals will fly on a non-interference basis (reference paragraph **2.10.4**), will use crew position "OX" (Colonel and above) or "XX" (Lt Col and below) IAW **Table A2.3**, and will log other time on the AFTO Form 781 for entry into ARMS.

3.2.1.5.3. Non-aircrew members assigned to RPA sensor operator positions will log flying time in assigned RPA aircraft. Individuals will fly on a non-interference basis, will use aircrew position (Second Character) "X" IAW **Table A2.3**, and will log AFTO Form 781 flying time category commensurate with qualification and duties performed for entry into ARMS.

3.2.2. Flights in any other capacity are orientation flights IAW paragraph **1.9.4.7.1** and logging flight time on an AFTO Form 781 is not authorized. Commanders will ensure crewmembers and parachutists do not credit flights/jumps while on leave, permissive TDY, or nonflying/nonjumping TDY/Temporary Additional Duty (TAD), regardless of duration, or while flying on an aircraft during point-to-point travel (not authorized or required to perform aircrew duties). Aircrew members will not log flying time when the purpose for flying is to make a proficiency-sustaining jump or perform jumpmaster duties. ***EXCEPTION:*** Pararescue personnel in X-coded billets may log flying time if aircrew duties are performed during the flying portion of the mission. Document duties performed in the remarks section of the AFTO Form 781.

3.2.3. For each individual, the total flight time logged will not exceed the total AFTO Form 781 flight time of the aircraft.

3.2.3.1. **Remotely Piloted Aircraft (RPA) Time.** RPA crews may be authorized to simultaneously control more than one aircraft during flight operations. The total time logged by each individual will reflect the total time spent controlling aircraft inflight and is not dependent upon the number of aircraft actually controlled. Flight time logged will not exceed the time the individual was performing inflight aircraft control duties. Flight time may be credited for Group 4 and Group 5 aircraft, as defined in Joint Publication (JP) 3-30, *Command and Control for Joint Air Operations.*

3.3. Definition of Flight Time Categories. The references in this paragraph to aircraft also apply to synthetic training devices categorized as operational flying trainers or weapon system trainers. Log flight time only on the AFTO Form 781 and AF Form 3520, *ARMS Aircrew/Mission Flight Data Extract*, and use only the approved Flight Authorization Duty Codes listed in **Attachment 2**, **Table A2.3**

3.3.1. **Primary Flight Time.** Time logged by a member occupying a designated duty station identified in AFI 65-503, and actively performing the duty associated with their aircrew specialty. Only qualified aircrew members and aircrew members obtaining qualification in the aircraft will log primary time when performing in-flight duties. Non-rated/non-CEA aircrew members and operational support personnel who do not have an established crew duty station will log primary time only when actually performing required in-flight duty. For example: operating equipment or caring for medical evacuation patients.

3.3.1.1. ***EXCEPTIONS:***

3.3.1.1.1. Pilot commanders and key supervisors who fly IAW the provisions of paragraph **3.6.1** will log primary time only when actually controlling the aircraft.

3.3.1.1.2. Pilots who maintain qualification in single-place aircraft when completing instrument training or the instrument flight check in similar dual-place aircraft.

3.3.1.1.3. Graduates of a military test pilot school (Air Force Test Pilot School, Navy Test Pilot School, etc.) are considered qualified and may log primary flight time using FP, FN, or FW as the flight authorization duty code while actively flying qualitative or approved short-term aircraft tests or evaluations. This does not authorize Test Pilot School graduates to perform duties on other missions requiring qualified aircrew members at the controls of the aircraft (e.g. functional check flights).

3.3.1.1.4. Pararescue/Combat Rescue Officer aircrew members assigned to authorized flying billets, on active flying AOs and qualified in the MDS, who are required in addition to the normal aircrew complement to perform in-flight duties for mass rescued aircrew member/personnel missions may log primary flight time when performing patient support duties on mass personnel recovery missions. Primary time is authorized only during the time required in-flight duties are performed. During periods when the PJ is not performing in-flight duties associated with the rescued members, or if the PJ is non-current for that MDS, "Other" flight time will be logged. Annotate specific inflight duties that require additional crewmembers (in additional to basic crew complement) on the mission in the remarks section of the AFTO Form 781.

3.3.1.1.5. Operational support medical personnel may log primary time when tasked to perform primary medical support duties on real world Combat Search and Rescue (CSAR), Casualty Evacuation (CASEVAC) or Medical Evacuation (MEDEVAC) missions. If tasked to fly on non-US Air Force missions, ensure requests are coordinated though the member's MAJCOM IAW paragraph **1.11.1** of this instruction.

3.3.1.1.6. Aeromedical Evacuation Crewmembers (AECM) on Aeromedical Readiness Missions (ARM) are authorized to conduct simultaneous (tandem) training on the same aircraft utilizing no more than two basic AE crews to meet flight currency requirements. AECMs in primary crew positions will log primary time when performing in-flight duties. ***Example:*** Two basic AE crews conducting separate in-flight training using separate in-flight kits, medical equipment, and mission documentation. A lead crew will be identified to the flight crew prior to take off for CRM purposes.

3.3.1.2. For pilots, primary time is time actively controlling the aircraft, excluding hands-on-time flown while instructing and evaluating (log such time under instructor or evaluator). It is not predicated on which set of controls is being used (multi-place aircraft), or on the duty position indicated on the flight authorization. Pilots receiving instruction while controlling the aircraft will log primary time.

3.3.1.3. Astronauts performing duties in the space shuttle may log primary time in their rated specialty in accordance with the preceding paragraphs. Astronauts performing space station duties may log primary time for the duration of space station activity. For space station duty, use Aircrew Position Identifier (Second Character) "A" from **Attachment 2**, **Table A2.3**

3.3.1.4. For other aircrew specialties, log primary flight time only when performing duties at a duty position established for that specialty. Where more than one station is established for the same specialty, one member at each such station may log primary time

while actually performing the duties associated with that station (for example, multiple Air Surveillance Operator positions on a single aircraft). (MAJCOMs will specify which AFI 65-503-authorized crew duty station(s) flight test engineers may occupy during test functions. During periods when the flight test engineer is not actively performing his or her evaluation/test duties, Other time will be logged.) Except under conditions in this paragraph, the total primary time for any specific aircrew specialty will not exceed the total flight time. ***Note***: Due to the broad nature of flight surgeon duties, each position which another aircrew member occupies (as defined in AFPD 11-4, e.g., pilot, navigator, ABM, observer, CEA personnel), may be considered as a flight surgeon station/position (i.e., a KC-135 with a pilot, copilot, and boom operator would be authorized three flight surgeon stations). If there are more flight surgeons onboard than aircrew stations, the total primary time must be split between those flight surgeons onboard by logging primary and other time. When the number of flight surgeons on board is less or equal to the number of occupied aircrew stations, all flight surgeons are authorized to log primary time for the entire mission.

3.3.1.5. Nonrated aircrew members on active flying AOs, qualified in specific aircraft, but tasked to perform in-flight aircrew duties for a time-sensitive mission in an aircraft in which they are not current and/or not qualified, will log aircrew certification code (first character of crew position) "F" and primary time for that mission. See also paragraph **3.2.1.5.2** ***Note***: Utilization of non-current and/or unqualified personnel is an exception to established policy. Every effort must be made to obtain current and qualified personnel to perform aircrew duties prior to utilizing non-current and/or unqualified personnel.

3.3.2. **Secondary Flight Time.** Flight time logged by a crewmember who is performing inflight duties related to the crewmember's specialty, but who is not controlling the function of that specialty. Except as listed below, the total secondary time logged in each specialty will not exceed the total flight time. When crewmembers are in excess of the authorized crew complement, annotate in the remarks of the AFTO Form 781 the secondary duties performed by additional aircrew.

3.3.2.1. The member must be maintaining or obtaining qualification in the aircraft to log secondary time. ***EXCEPTION:*** Crewmembers in aircrew positions designated in AFI 65-503; and tasked to perform primary duties on aircraft other than their assigned aircraft (e.g., Flight Attendants tasked by TACC or HHQ to support Silver Bullet or DV missions) will log secondary time as long as they maintain currency in their primary aircraft. The member's aircrew certification code will reflect the current qualification. If not qualified in the aircraft, the member will log "X" or "O" as the aircrew qualification code first character IAW **Table A2.3**

3.3.2.2. For pilots, log secondary time while occupying a duty position having a set of flight controls and not actively controlling the aircraft, instructing, or evaluating.

3.3.2.3. For other aircrew specialties, log secondary time when actually performing inflight duties of the specialty, but not at the primary duty station established for that specialty (for example, second navigator during airdrop missions or additional PJs/CROs on AOs required to perform "in-flight duties" assisting mass aircrew/personnel on a rescue mission) when dictated by mission requirements.

3.3.2.3.1. Annotate in the remarks section of the AFTO Form 781 specific inflight duties performed and circumstances that require additional crewmembers (in additional to basic crew complement) to perform the mission.

3.3.2.4. A current Aeromedical Evacuation Crewmember (AECM) may log secondary time when performing simulated patient duties or Mission Clinical Coordinator duties during aeromedical readiness missions. A noncurrent AECM may only log Other flight time when performing simulated patient duties.

3.3.2.5. Except as provided for in AFI 65-503, the total secondary time logged in each specialty will not exceed the total flight time.

3.3.2.6. Pararescue aircrew members assigned to authorized flying billets, on active flying AOs and qualified in the MDS, who are required in addition to the normal aircrew complement to perform in-flight duties for mass rescued aircrew member/personnel missions, may log secondary time when performing simulated patient duties or Mission Coordinator duties on mass personnel recovery training missions. Secondary time is authorized only during such time those in-flight duties are performed. During periods when the PJ is not performing "in-flight" duties associated with the rescued members or mission coordinator, or non-current for that MDS, only Other flight time will be logged.

3.3.3. **Instructor Flight Time.** Flight time logged by a designated and qualified instructor while actively performing authorized instructional duties. Includes "hands on" time during demonstration activities that are part of instructional duties. The instructor is not required to occupying a primary duty station established for that specialty, but must be actually performing instructor duties. Except as provided for in this section, members must be qualified and current in the aircraft to log instructor time. Except as provided for in AFI 65-503 and paragraph **3.3.3.1**, the total instructor flight time for each aircrew specialty will not exceed the total flight time.

3.3.3.1. Instructors may log instructor time while accomplishing unlike specialty training instruction (e.g., an instructor navigator training pilots/boom operators for a three-person crew or third pilots in the navigator seat). Only the amount of time used to train a specific event may be logged as instructor time. If more than one instructor of like specialty are on the aircraft to provide simultaneous instruction for crewmembers of different specialties, both instructors may log instructor time (e.g., two instructor navigators are on the same aircraft, one is instructing a student navigator and the other is instructing a boom operator). In this case, total instructor time logged may exceed total flight time logged. Enter a remark on the back of the AFTO Form 781 explaining the rationale for logging excess instructor time.

3.3.3.2. Two instructors (to include FTU) of the same specialty may fly together and each log instructor time; however, total instructor time logged may not exceed total flight time logged. (e.g., A new FTU instructor is flying with a student crew and a more experienced FTU instructor flies with the new FTU instructor; instruction can occur between the new FTU instructor and student or between the experienced FTU instructor and new instructor, but not both simultaneously. Therefore, the total instructor time logged may not exceed total flight time.).

3.3.3.3. Aircrew members who are instructor qualified in one aircraft, and who are current and qualified (but not qualified as an instructor) in another aircraft, may log instructor time while flying in the second aircraft and providing instruction to an aircrew member in the first aircraft. This applies to instructors in single seat aircraft who are also qualified in chase aircraft, but who do not maintain instructor qualification in the chase aircraft. Instructor time may be logged only while actively providing instruction. Enter a remark on the back of the AFTO Form 781 to explain the rationale for logging instructor time in the chase aircraft (this paragraph may be cited as a reference).

3.3.3.4. Instructors will log primary, secondary, or other time, depending on their activity, when not performing instructor duties.

3.3.3.5. Log simulator console time as instructor time when the crewmember is qualified as an instructor in the aircraft. When MAJCOMs authorize crewmembers to be instructors in the simulator only, they may log simulator console time as instructor time. MAJCOMs will determine which types of simulators qualify for this approval, e.g., operational flight trainers, weapon system trainers, etc.

3.3.4. **Evaluator Flight Time.** Flight time flown by a designated and certified flight evaluator while actively performing authorized flight evaluation duties. Includes "hands on" time if coincident with performance of flight evaluator duties. The member is not required to occupy a primary duty station established for that specialty, but must be actually performing evaluator duties. Evaluators will also log instructor, primary, secondary, or other time, depending on their activity, when not performing evaluator duties. ***Note***: Members must be current and certified in the aircraft to log evaluator time. When flight evaluators conduct flight evaluations onboard aircraft in which they are not qualified, then members must log "O" or "X" as the aircrew qualification code first character IAW **Table A2.3**

3.3.4.1. Aircrew members who are designated and certified as a flight evaluator in one aircraft, and who are current and qualified (but not certified as a flight evaluator) in another aircraft, may log evaluator time while flying in the second aircraft and evaluating an aircrew member in the first aircraft. This applies to flight evaluators in single seat aircraft who are also qualified in chase aircraft, but who are not certified as a flight evaluator in the chase aircraft. Enter a remark on the back of the AFTO Form 781 to explain the rationale for logging evaluator time in the chase paragraph (this paragraph may be cited as a reference).

3.3.5. **Other Flight Time.** Flight time flown by members who are on the flight authorization, but who are not occupying a designated duty station or conforming to the requirements of primary, secondary, instructor, or evaluator time. For example: additional or extra crewmembers taking part in the flight, required for the mission to augment the crew or perform mission-related observation or evaluator duties (not qualified in the aircraft). Indoctrination fliers log other time. Crewmembers will log other time during periods of crew rest or sleep.

3.3.6. **Combat and Combat Support Flight Time**.

3.3.6.1. Combat. Aerial activity, engagements, or attacks conducted by aircraft against an enemy of the US or an opposing foreign force when there is risk of exposure to hostile fire. Aerial activity in support of forces engaged in combat when there is risk of exposure

to hostile fire. Combat includes both elements: activity against an enemy or opposing force (or activity supporting forces engaging an enemy or opposing force) *and* risk of exposure to hostile fire.

3.3.6.1.1. As soon as possible after a combat zone is established, the Commander Air Force Forces (COMAFFOR) will identify which portion constitutes hostile airspace. Hostile airspace is airspace within a combat zone that has been specifically designated as hostile airspace by the COMAFFOR, based on risk of exposure to hostile fire. The combat zone may contain areas that are not designated as hostile airspace. For the purposes of logging combat time the aerial activity must be accomplished in a designated combat zone within the designated hostile airspace. Flight within the combat zone but outside of the designated area or areas of hostile airspace does not qualify as combat time, since there is no risk of exposure to hostile fire. (***EXCEPTION:*** In cases of aircrews that employ standoff weapons, the COMAFFOR under extraordinary circumstances may permit those aircrews to log combat time outside of the hostile airspace and/or outside of the designated combat zone. If an exception is granted, include the exception in the guidance designating the combat zone and the hostile airspace.) COMAFFOR will publish guidelines specifying which aircraft missions may log combat/combat support flight time and will identify the inclusive dates that the hostile airspace is activated for logging combat time. During contingencies when a combat zone is not designated but the use of force is authorized, COMAFFOR will coordinate with AF/A3/5 to establish hostile airspace criteria and guidelines for logging combat/combat support flight time. ***Note:*** COMAFFOR will issue new guidance and procedures every two years to ensure all Air Force units are aware of the current policy.

3.3.6.2. Combat Support. Aerial activity, engagements, or attacks conducted by aircraft against an enemy of the US or an opposing foreign force that operate outside the designated hostile airspace, where there is no risk of exposure to hostile fire. Includes aerial activity directly supporting forces engaged in combat or directly supporting those who are actively supporting combat when the aerial activity occurs outside the designated hostile airspace. Hostile airspace is determined as described above under combat time.

3.3.6.3. Combat or combat support time will be logged from takeoff to landing when an individual: (1) meets the requirements of combat/combat support flight time, (2) is on an AO that requires the member to fly, (3) is listed on the flight authorization authorized to perform in-flight aircrew duties and, (4) is required for the mission IAW paragraph **3.2.1.5** of this instruction. Additionally, eligible members authorized to fly IAW paragraph **3.6.1** may log combat or combat support time. Do not combine mission symbols; use one symbol for the entire flight.

3.4. Flight Condition Time. The categories listed in paragraph **3.3** are the basis for accumulating flying experience for all flying personnel. Record all flying time accrued on a mission in the appropriate category. Provisions have been made to record, for historical purposes, a breakout of flight time by flight condition: night, instrument, and simulated instrument. Primary time flown in more than one condition simultaneously (for example, night and instrument) would result in entries under both of these categories on the form. The type of time logged will be consistent with the flight condition actually encountered or procedure

accomplished. MAJCOMs may further restrict logging combinations that are inconsistent with command policy or procedures. Use the following guidance for logging flight condition time:

3.4.1. **Night Time.** The portion of primary, secondary, instructor, or evaluator flight time logged between the end of evening civil twilight and the beginning of morning civil twilight, as published in the American *Air Almanac*. (***EXCEPTION:*** An evaluator will log night time as a flight condition in conjunction with "Other" flight time when performing evaluation duties onboard aircraft in which he or she does not maintain qualification.) For personnel assigned at latitudes above 60 degrees north (May through August) or below 60 degrees south (November through February), night requirements are waived when removal from active flying or PCS occurs during the summer months. May be logged in a flight simulator when operating in simulated night conditions.

3.4.2. **Night Vision Goggle Time.** The portion of flight time logged by an aircrew member wearing night vision goggles between the end of evening civil twilight and the beginning of morning civil twilight, as published in the American *Air Almanac*. Crewmembers performing aircrew duties in a crew position with NVG training requirements will log this time while wearing NVGs. NVG time may also be logged by flight surgeons and aircrew members instructing or evaluating individuals who are performing crew duties where NVGs are required and worn. NVG time will not exceed total night time logged. NVG time may be logged in a flight simulator if the simulator is accredited for NVG training (simulator model and simulator software).

3.4.3. **Primary Instrument Time.** The portion of primary, instructor, or evaluator flight time logged when external conditions require that the aircraft attitude be maintained primarily by reference to the flight instruments. Pilots only will log this time when performing duties in this flight condition. ***Note:*** To log primary instrument time in the aircraft, an instructor or evaluator pilot must occupy a duty station with a set of flight controls, but does not have to actively (hands-on) control the aircraft. An accredited flight simulator or flight training device may be used by a pilot to log instrument time, provided an authorized instructor is present during the simulated flight. Simulators are accredited for logging instrument time according to AFI 36-2251, *Management of Air Force Training Systems.*

3.4.4. **Primary Simulated Instrument Time.** The portion of primary, "hands-on" instructor, or "hands-on" evaluator time logged by an individual controlling the aircraft attitude primarily by reference to the flight instruments. Pilots only will log this time when performing duties in this flight condition. May be logged in a flight simulator.

3.5. Non-rated/non-CEA Flight Time. Non-rated/non-CEA aircrew members will log flying time using the proper flight authorization duty code. Log time only when authorized on AOs and when actively performing specific inflight duties as designated by flight authorization orders (paragraph **3.8**). Aeromedical evacuation crewmembers log time only when listed on the flight authorization and actively engaged in operational air evacuation or air rescue missions; aeromedical research and development inflight; or air evacuation training missions that require AECMs in a crew position, being instructed, being evaluated, or as listed in paragraph **3.3.2.4** above.

Section 3B—Logging of Flight Activity (General)

3.6. Logging Flight Time for Pay. Credit only flight time logged according to paragraph **3.2** toward incentive pay requirements. Flight time flown in "O" or "X" status does not entitle the member to OFDA credit, ACIP or HDIP. ***Note:*** See **Attachment 2**, **Table A2.3** ***EXCEPTION:*** Air Technicians (AT) and Air Reserve Technicians (ART) must be in military status to log time for incentive pay. This Air Force Instruction and MAJCOMs define the inflight duties that qualify individuals for ACIP, CEFIP, or HDIP.

3.6.1. **Logging Flight Time by Rated Officers and CEAs Who are Qualified in One Aircraft and Not Other Types of Aircraft Assigned to Their Units.** MAJCOMS and equivalent organizations, and subordinate organizations, may authorize commanders (including unit commanders) and key supervisors (API 6, 8, B, or D) who are qualified and maintain currency in one type aircraft, but have other types assigned to their units, to fly in a primary crew position in assigned aircraft in which they are not qualified. Individuals will be under the supervision of an instructor for the applicable crew position. The crewmember will log an "O" or "X" as the aircrew qualification code first character and his or her assigned second character crew position code IAW **Table A2.3** (As noted above, flight time flown in "O" or "X" status does not entitle the member to OFDA credit, ACIP or HDIP.) See also paragraph **3.3.1.1.1** Members who fly IAW this paragraph will log all applicable flight time, to include combat or combat support time (see paragraph **3.3.6.3**). Members will comply with minimum requirements in AFI 11-202 Vol 1 and in the MDS-Specific Vol 1 for aircraft in which they log flight time. (***EXCEPTION:*** Form 8/8a qualification and flight event currency are not required in additional aircraft, unless members maintain multiple qualification.) ***Note:*** Pilots who fly under the provisions of this paragraph may fly in the seat with MEP on board the aircraft. See also paragraph **1.12.4.2**.

3.7. Logging Flight Time by Rated Officers and Career Enlisted Aviators in Inactive Flying Status. Personnel in such status do not log flying time in their specialty in US Government aircraft except as provided in FAC waivers listed in **Table 2.2**, paragraphs **2.7.2.2.**, **2.8.1.1.**, and **2.14** In all such cases, inactive crewmembers must maintain physical and physiological qualification (if applicable) for aviation service.

3.8. Non-rated/non-CEA Crewmembers and Operational Support Flight Time. Inflight duties authorized by Air Force and MAJCOM instructions determine the proper flying duty or position symbol for logging flight time on AFTO Form 781. This flying time is accomplished when actively performing inflight duties as follows:

3.8.1. **Non-rated/non-CEA Crewmember Duty.** When on AOs and properly assigned to an authorized non-rated/non-CEA aircrew position as part of the regularly constituted crew IAW AFIs 11-401, 11-402, and 65-503, and:

3.8.1.1. The individual's primary duty requires the performance of inflight duties on a frequent and regular basis.

3.8.1.2. The approved inflight duties are essential to operating aircraft systems and associated equipment required for mission accomplishment.

3.8.2. **Operational Support (Non-crewmember) Duty.** Members are placed on AOs for a specified time and must be properly authorized to perform inflight duties not prescribed in AFI 65-503 and to supplement a regularly constituted aircrew. They are on flight status for

limited periods to perform essential and specific in-flight duties that cannot be accomplished by authorized aircrew personnel. Refer to AFI 11-402 for guidance.

3.9. Logging Flight Time in Non-US Air Force Aircraft. Only members performing inflight duties authorized by paragraph **1.11** may log flying time in non-US Air Force aircraft for credit towards OFDA requirements or incentive pay. Otherwise only "Other" flight time will be credited in an individual's flight records.

3.10. Logging Other US Military Time. Total career flight time obtained in the service of other US military agencies when not officially directed by the Air Force, and when verified by logbook or other official records certified by authorized persons. This time will be entered into ARMS in the Other US Military hour block. Time obtained in other US military aircraft is not included in this category if performed in an official capacity (e.g., directed by competent Air Force order); such time is recorded as Air Force rated time. ***Note:*** Inter-service transfers who previously participated in an Air Force aviation exchange program may have their time separated by Air Force MDS. This time will be subtracted from the total Other US Military flying time.

3.11. Logging Student Time. Total career flight time acquired by rated trainees in USAF or USAF-directed undergraduate flight training prior to attaining a rating. This time will be entered into ARMS in the student time hour block. ***Note:*** Interservice transfers who previously participated in an Air Force aviation exchange program may have their time separated by Air Force MDS. Example: Capt Schaffer, an interservice transfer, flew 350 hours in the F-16 during his Naval career under an approved Air Force exchange program. Capt Schaffer's flight time may be logged under the MDS F-16 in ARMS. This time will be subtracted from the total Other US Military flying time.

3.12. Logging Foreign Military Time. Total career flight time obtained in the service of other governments when not officially directed by the Air Force, and when verified by logbook or other official record certified by authorized persons. This time will be entered into ARMS in the Foreign Military hour block.

3.13. Logging Flight Time in Other Than Military Aircraft. Flight time logged according to paragraph **3.2** in other than military aircraft is credited toward annual flying requirements only when directed by competent Air Force AOs and such flying is inherent in the primary duty assignment of the person concerned. Aircrews must document flight time on an AFTO Form 781 or AF Form 3250 and, except for CAP-USAF or Introductory Flying Training missions, be in aircraft with 450 or more rated horsepower.

3.14. Logging Civilian Flight Time. Total career flight time acquired in civilian aircraft of 450 or more rated horsepower, when verified by logbook or other official record certified by authorized persons. (These authorized persons are operations officers of military aviation activities; suitable agents of commercial aviation companies; operating managers of fields from which the reported flying was performed, if in privately owned aircraft; and officials of recognized civil flight schools.) This time will be entered into ARMS in the civilian hour block.

3.15. Quarterly General Officer Flying Hour Information Report. MAJCOMs will submit Quarterly GO Flying Hour Information Report (RCS: HAF-A3O[Q]0702) via message to HQ USAF/A3O-AT by the 15th of the month following each calendar quarter. This report is designated emergency status code C-3. Submit data requirements as prescribed, but they may be delayed to allow the submission of higher precedence reports. Continue reporting during

emergency conditions, delayed precedence. Discontinue reporting during MINIMIZE. Provide data for operational fliers. As directed by AF/A3O-AT, provide data for indoctrination fliers. The report will include the following:

3.15.1. Rank/Name/Position. Include general officer selectees.

3.15.2. Aircraft qualification/aircrew status.

3.15.3. Flight Authorization Duty Codes.

3.15.4. Aircrew Position Indicator Code/Aviation Service Code.

3.15.5. Total flight hours/sorties in all aircraft in which the member is authorized to obtain or maintain qualification (AF Form 8) by aircraft and by flight time category. Unless directed by AF/A3O-AT, do not provide data for aircraft in which the member is not authorized to obtain or maintain qualification.

3.16. Adopted Forms.

DD Form 149, *Application for Correction of Military Record Under the Provision of Title 10, U.S. Code, Section 1552*; DD Form 2131, *Passenger Manifest* AF Form 8, *Certificate of Aircrew Qualification*; AF Form 8a, *Certificate of Aircrew Qualification (Multiple Aircraft)*; AF Form 480, *Aircrew AFSC/Active Flying Justification*; AF Form 702, *Individual Physiological Training Record*; AF Form 847, *Recommendation for Change of Publication*; AF Form 922, *Individual Jump Record*; AF Form 1042, *Medical Recommendation for Flying or Special Operational Duty*; AFTO Form 781A, *Maintenance Discrepancy and Work Document*; AFTO Form 781F, *Aerospace Vehicle Flight Report and Maintenance Document*; AFTO Form 781G, *General Mission Classification-Mission Symbols*;. AFTO Form 781H, *Aerospace Vehicle Flight Status and Maintenance Document*; AFTO Form 781M, *Status Symbols and Functional System Codes.*

3.17. Prescribed Forms.

AFTO Form 781 *ARMS Aircrew/Mission Flight Data Document*; AF Form 1887 *Aeronautical Order Aviation Service*; AF Form 3520 *ARMS Aircrew/Mission Flight Data Extract*; AF Form 4327 *ARMS Fighter Flight Authorization*; AF Form 4327a *Crew Flight Authorization.*

PHILIP M. BREEDLOVE, Lt Gen, USAF
DCS, Operations, Plans, and Requirements

Attachment 1

GLOSSARY OF REFERENCES AND SUPPORTING INFORMATION

References

Title 10, United States Code, Section 653

Title 10, United States Code, Section 2012

Title 32, United States Code, Section 508

Title 37, United States Code, Sections 205, 301a, 301b, and 320

DoD 4500.09-E, *Transportation and Traffic Management*, 11 Sep 2007

DoD 4515.13-R, *Air Transportation Eligibility*, 1 Nov 1994

DoD 7000.14-R, *Department of Defense Financial Management Regulations (FMRs)*, Volume 7A, *Military Pay Policy and Procedures – Active Duty and Reserve Pay*, 5 Sep 2010

JP 3-30, *Command and Control for Joint Air Operations*, 12 Jan 2010

AFPD 11-4, *Aviation Service*, 1 Sep 2004

AFPD 33-3, *Information Management*, 28 Mar 2006

AFI 10-206, *Operational Reporting*, 15 Oct 2008

AFI 10-2701, *Organization and Function of the Civil Air Patrol*, 29 Jul 2005

AFI 11-202, Volume 2, *Aircrew Standardization/Evaluation Program*, 13 Sep 2010

AFI 11-202, Volume 3, *General Flight Rules*, 22 Oct 2010

AFI 11-402, *Aviation and Parachutist Service, Aeronautical Ratings and Badges*, Nov 10 (pending)

AFI 11-403, *Aerospace Physiological Training Program*, 20 Feb 2001

AFI 11-405, *The Pilot-Physician Program*, 2 Oct 2000

AFI 11-410, *Personnel Parachute Operations*, 10 Dec 2009

AFI 11-412, *Aircrew Management*, 10 Dec 2009

AFI 11-421, *Aviation Resource Management*, Nov 10 (pending)

AFI 16-107, *Military Personnel Exchange Program*, 2 Feb 2006

AFI 16-201, *Air Force Foreign Disclosure and Technology Transfer Program*, 1 Dec 2004

AFI 21-101, *Aircraft and Equipment Maintenance Management*, 12 Apr 2010.

AFI 24-101, *Passenger Movement*, 27 Oct 2004

AFI 33-332, *Privacy Act Program*, 29 Jan 2004

AFI 33-360, *Publications and Forms Management*, 18 May 2006

AFI 35-103, *Public Affairs Travel*, 26 Jan 2010

AFI 35-105, *Community Relations*, 26 Jan 2010

AFI 36-2110, *Assignments,* 22 Sep 2009

AFI 38-201, *Determining Manpower Requirements,* 30 Dec 2003

AFI 44-170, *Preventive Health Assessment*, 10 Dec 2009

AFI 48-123, *Medical Examinations and Standards,* 24 Sep 2009

AFI 65-103, *Temporary Duty Orders,* 5 Aug 2005

AFI 65-503, *US Air Force Cost and Planning Factors,* 4 Feb 1994

AFMAN 33-363, *Management of Records,* 1 Mar 2008

AFPAM 36-2607, *Applicant's Guide to the Air Force Board for Correction of Military Records (AFBCMR),* 3 Nov 1994

Abbreviations and Acronyms

ABM—Air Battle Manager

ACC—Air Combat Command

ACIP—Aviation Career Incentive Pay

AE—Aeromedical Evacuation

AFGSC—Air Force Global Strike Command

AFMC—Air Force Material Command

AFRC—Air Force Reserve Command

AFRICOM—Africa Command

AFSOC—Air Force Special Operations Command

AFSPC—Air Force Space Command

AMC—Air Mobility Command

ANG—Air National Guard

API—aircrew position indicator

ARC—Air Reserve Component

ARM—aviation resource management/aviation resource manager

ARMS—Aviation Resource Management System

AS—aviation service

ASC—aviation service code

ASD—aviation service date

CAP—Civil Air Patrol

CEA—career enlisted aviators

CEFIP—Career Enlisted Flier Incentive Pay

CENTCOM—Central Command

CHARM—chief, host aviation resource manager

CHARMS—Consolidated Headquarters Aviation Resource Management System

CJCS—Chairman of the Joint Chiefs of Staff

COCOM—Combatant Command

COMAFFOR—Commander Air Force Forces

CONUS—Continental United States

CSO—combat systems officer

DIA—Defense Intelligence Agency

DNIF—duty not involving flying

DoD—Department of Defense

DoDFMR—Department of Defense Financial Management Regulation

DRU—direct reporting units

DSAA—Defense Security Assistance Agency

DV—distinguish visitor

EMTF—Expeditionary Mobility Task Force

ESC—entitlement status code

EUCOM—European Command

FA—flight authorization

FAC—flying activity code

FEB—flying evaluation board

FDO—foreign disclosure officer

FME—flight medicine element

FMS—foreign military sales

FOA—field operating agencies

FRF—flight record folder

FSC—flying status code

FY—fiscal year

GSU—geographically separated unit

HARM—host aviation resource management

HDIP—hazardous duty incentive pay

HPSP—Health Professions Scholarship Program

IOT&E—initial operational test and evaluation

JP—joint publication

JRF—jump record folder

MAAG—Military Assistance Advisory Group

MAJCOM—Major Command. For the purposes of this AFI, ANG is considered a MAJCOM.

MAP—Military Assistance Program

MDS—mission design series

MEP—mission essential personnel

MPF—Military Personnel Flight

NATO—North Atlantic Treaty Organization

NDAA—National Defense Authorization Act

NORTHCOM—Northern Command

OFDA—operational flying duty accumulator

OSA—operational support aircraft

OSD—officer service date

OT&E—operational test and evaluation

PACAF—Pacific Air Forces

PACOM—Pacific Command

PCA—permanent change of assignment

PCS—permanent change of station

PMAI—primary mission aircraft inventory

ROTC—Reserve Officer Training Corps

RP—remote pilot

RPA—remotely piloted aircraft

SARM—squadron aviation resource management

SEAL—sea-air-land team

SECAF—Secretary of the Air Force

SOC—Special Operations Command

SOUTHCOM—Southern Command

SSN—Social Security Number

TAD—Temporary additional duty

TARM—Tenant aviation resource management

TDY—Temporary duty

TFAP—Total Force Absorption Program

UFT—Undergraduate flying training

UMD—Unit manpower document

UPT—Undergraduate pilot training

USAF—United States Air Force

USAFA—United States Air Force Academy

USAFE—United States Air Forces in Europe

U.S.C.—United States Code

USCENTCOM—United States Central Command

USMILGP—United States Military Group

USUHS—Uniformed Services University of Health Sciences

Terms

Aircrew—As defined in AFPD 11-4, *Aviation Service,* the total complement of rated (pilots, navigators, combat systems operators, air battle managers, and flight surgeons), career enlisted aviators (1AXXX and IUXXX Air Force Specialty Codes), and nonrated aircrew (K-, Q-, or X-prefixed Air Force Specialty Code) personnel responsible for the safe ground and flight operation of the aircraft and onboard systems, or for airborne duties essential to accomplishment of the aircraft‘s mission. Includes members in initial formal training for immediate assignment to an authorized operational flying position. Individuals must be on AOs and assigned to an authorized position according to AFI 65-503, *US Air Force Cost and Planning Factors*, or nonrated aircrew not in an aircraft’s basic crew complement, but required for the mission. Aircrew members perform their principal duties inflight and their presence is required for the aircraft to accomplish its primary tasked mission. Duties must be essential to operating the aircraft or mission systems and equipment used for completing a mission, or other duties essential to the aircraft’s mission. ***Note:*** As used in the publication, the term “navigator” includes all navigator specialties and is synonymous with the designation Combat Systems Officer (CSO). New UFT graduates are designated CSOs, but previously qualified individuals will continue to be identified as navigators.

Air Force Aircraft—US Government aircraft under US Air Force jurisdiction.

Airmanship Programs (USAFA)—Any USAF Academy course listed in the catalog and administered by the 306 FTG at the Academy airfield or deployed location.

Authentication—The process that makes an administrative order official. Evidenced by proper signature or seal that a document is genuine and official. The only seal authorized on AOs is on Department of the Air Force (DAF) orders (For example: A DAF order that awards a pilot rating).

Authorized Aircrews—Aircrews authorized according to AFI 65-503, *US Air Force Cost and Planning Factors,* Attachment A36-1 (Authorized Aircrew Composition Active Forces),

Attachment A37-1 (Authorized Aircrew Composition Reserve Forces), and Attachment A38-1, (Authorized Aircrew Composition Guard Forces).

Aviation Career Incentive Pay (ACIP)—Incentive pay for rated officers in an aviation career as authorized in the Aviation Career Incentive Act of 1974, the Aviation Career Improvement Act of 1989, and the FY 96 National Defense Authorization Act.

Aviation Service Date (ASD)—Effective date of the first AO to perform flight duties. For rated officers, this date is set when the member first reports to the aviation activity that has aircraft in which he or she will receive flight training leading to an aeronautical rating and is placed on AOs (for example, class start date of SUPT, SUNT, UPT-H class, or Weapons Systems Training) or date of commission, whichever is later. For flight surgeons, the ASD equals the date all requirements for the flight surgeon rating were met, which is normally the date Course 50BY9351 or equivalent was completed. (***EXCEPTION:*** The ASD for medical students who have completed Course 50BY9351 will be the date post graduate medical training is completed, an unrestricted medical license is attained, AFSC 48XX is awarded, and the flight surgeon rating is assigned. All requirements must be accomplished for award of the ASD.) For Air Battle Managers, the ASD is the date the crewmember enters formal ABM flying training (class start date). For career enlisted aviators, the ASD is set when the member first reports to the aviation activity that has aircraft in which he or she will receive flight training leading to career enlisted aviator status and is placed on AOs. Rated ASDs and CEA ASDs are established separately. See also AFI 11-402.

Aviation Programs (USAFA)—Any USAF Academy course listed in the catalog and administered by the Dean of Faculty in conjunction with the 306 FTG at the Academy airfield or deployed location.

Career Enlisted Aviator (CEA)—Personnel in AFSCs 1AXXX and 1UXXX.

Career Enlisted Flier Incentive Pay (CEFIP)—Incentive pay for career enlisted aviators in an aviation career as authorized in the FY 00 NDAA.

Civil Air Patrol-United States Air Force (CAP-USAF)—CAP-USAF is the Air Force agency that coordinates or approves use of the Civil Air Patrol to carry out non-combat missions of the Air Force (IAW AFI 10-2701).

Commander—When used in this instruction, "commander" refers to a wing commander (or comparable level), or any level higher within the chain of command, of a flying unit to which an individual is assigned or attached for flying. If an individual is geographically separated from the wing, authority may be delegated to a group or squadron level.

Conditional Entitlement—The condition under which rated officers and career enlisted aviators in an aviation career are entitled to receive ACIP, CEFIP, or HDIP, conditional to meeting minimum monthly flying time standards IAW DoD 7000.14-R, Volume 7A; and AFI 11-421.

Continuation Training—The continuation training program provides crew members with the volume, frequency, and mix of training (flying and ground training) necessary to maintain proficiency in the assigned qualification level. This training must be recorded in the ARMS database.

Continuous Entitlement—The condition under which rated officers and career enlisted aviators in an aviation career are entitled to receive ACIP or CEFIP without regard to flight activity.

Flight—For the purpose of this instruction only, a flight is synonymous with a mission.

Flight Authorization (FA)—A single document used to identify all aircrew, operational support, and authorized non-interference members on AOs, who are qualified and required to perform duties on specific aircraft for a scheduled mission. MEP may be placed on the flight authorization, only in the Remarks section. AE/PJ FAs are attached to the aircraft FA for the mission(s) on which they performed duties.

Form—Term used to identify Air Force forms and IMTs (Information Management Tools). IAW AFI 33-360, the IMT designator is being phased out; it is not used in this publication.

Frequent and Regular—"Frequent and regular" is a DoD 7000.14-R, Volume 7A, Chapter 22, term which establishes the minimum monthly flight requirements to be entitled to conditional Aviation Career Incentive Pay (ACIP), Career Enlisted Flight Incentive Pay (CEFIP), or Hazardous Duty Incentive Pay (HDIP). DoD 7000.14-R, Volume 7A, sets the minimum at four hours for active duty (Chapter 22) and two hours for Air Reserve Components (ARC) per calendar month (Chapter 58), or a prorated share for lesser periods. By itself, the requirement to fly frequently and regularly is not justification to assign an individual to aircrew or operational support flier status. There must be a need to perform inflight duties.

Government Aircraft—An aircraft owned, operated, or leased by the US Government.

Hazardous Duty Incentive Pay (HDIP)—Incentive pay authorized for personnel required to perform flight duties on a frequent and regular basis.

Host Aviation Resource Management (HARM) Office—The office responsible for ARMS, flight record, and jump record management. The HARM office determines entitlement to ACIP, CEFIP, and HDIP.

Host Aviation Resource Manager—The sole approval authority (except for AF/A3O-AT) at each flying base for determining entitlement and the starting and stopping of ACIP, CEFIP, and HDIP for flying and parachute duties; responsible for interpreting public law as it pertains to entitlement to these incentive pays along with auditing and reconciliation of these incentive pays; and the single point of contact for ARMS. This position is inherently governmental.

Instrument Flight—Flight conducted when external conditions require that the aircraft attitude be maintained primarily by reference to the flight instruments.

Intent—For the purpose of publishing an AO, the intent of an AO is to validate individual qualification for aviation and/or parachutist service, authorize and direct frequent and regular participation in aerial flight or parachute duties; and establish or terminate individual entitlement to ACIP, CEFIP, and HDIP. Intent also includes the effective date of the AO.

Interfly—The exchange and/or substitution of aircrews and aircraft between MAJCOMs.

Mission—For the purpose of this instruction only, mission is defined as a primary objective for which an aircraft is operated (see Mission Symbols) and which may consist of an increment of one or more sorties. Several missions may be accomplished in one sortie.

Mission Essential Personnel (MEP)—personnel who are required for the execution of the aircraft or unit mission, to include follow-on missions. Includes additional aircrew members required for follow-on missions (may be further defined in MAJCOM supplements to this instruction) and personnel not authorized AOs who are tasked to perform ground support duties

at enroute locations or destination points that are directly related and essential to accomplishment of the aircraft or unit mission, e.g. a specialist or technician required to provide aircraft support or a security team required to guard the aircraft. MEP may include military staff personnel; U.S. Government employees; government contract employees (IAW the terms and conditions of a current government contract); and foreign military, civilian, and contract employees (IAW the terms and conditions of a current government contract); when those individuals are required for the mission. Flights involving foreign nationals must be reviewed for foreign disclosure requirements and political concerns, to include compliance with AFI 16-201, and must include SAF/IA regional division coordination. MAJCOMs may further define MEP in supplements to this instruction but guidance may not be less restrictive than the guidance contained herein. The OG/CC (or equivalent) with operational control of the aircraft grants MEP status. (***EXCEPTIONS:*** For AMC missions already in the system, the TACC Senior Controller may approve MEP status. MAJCOM Standardization/Evaluation Chiefs may approve MEP status for MAJCOM or MAJCOM-gained missions for evaluators assigned to the MAJCOM.) If operational control transfers, the OG/CC (or equivalent) who assumes follow-on operational control may continue/revise MEP status (coordinate changes with originating authority). MAJCOMs may establish intra-command and inter-command guidance to facilitate this process. MEP, to include additional crewmembers who fly in MEP status, are passengers and may only fly in aircraft capable of carrying passengers IAW the provisions of DoD 4515.13-R. (***EXCEPTION:*** MEP who are mission essential may fly on aircraft not normally equipped for carrying passengers. MEP who fly under the provisions of this exception must be physically and physiologically [when required] qualified and must complete applicable egress training prior to flight.)

Officer Service Date (OSD)—Effective date of service as a commissioned, warrant, or flight officer, whether or not served on extended active duty. This is usually equivalent to total federal commissioned service date backdated by any period served as a warrant or flight officer. For flight surgeons, the OSD includes constructive service granted medical officers in the computation of creditable service for basic pay.

Operational Flying—Flying performed under competent orders by rated and CEA personnel (primarily for mission, support, or training purposes) while serving in an assignment where basic flying skills usually are maintained for performing assigned duties.

Operational Support Flier—An individual whose primary, full-time duty does not require flying. The Air Force may require these individuals to fly on an occasional basis to perform a specific, essential inflight duty that cannot be performed by an assigned aircrew member. Duties may include, but are not limited to inflight test, operation, or inflight maintenance of specific aircraft systems or installed equipment. To receive non-crew hazardous duty pay, operational support fliers must be placed on AOs and complete prescribed flying hour requirements. Authorized man-months are required prior to issuance of AOs.

Orientation Flight—Continuous flights in DoD-owned aircraft performed within the local flying area and terminating at the point of origin, conducted to reward and motivate individuals (incentive orientation flights only), ensure a better understanding of a particular weapon system and its role, or when the flight is determined to be in the best interest of the USAF.

Pilot In Command—The aircrew member designated by competent authority as being in command of an aircraft and responsible for its safe operation and accomplishment of the assigned mission.

Point-To-Point—Point-to-point means flights that takeoff from one location and land at a different location. Point-to-point orientation flights are not authorized. ***EXCEPTION:*** Units may accomplish orientation flights within the local flying area to operational and remote sites that are part of the home unit, as long as the mission terminates at the point of origin. Such flights providing unit mission orientation are not considered point-to-point flights and an exception to policy is not required (OSD-ATL policy guidance, Feb 10).

Sortie—An AFTO Form 781 aircraft sortie begins when the aircraft begins to move forward on takeoff or takes off vertically from rest at any point of support. It ends after airborne flight when the aircraft returns to the surface and either of the following conditions occur: a) the engines are stopped, or the aircraft is on the surface for five minutes, whichever occurs first; or, b) a change is made in the crew which enplanes or deplanes a crewmember. For logging aircrew proficiency training, on missions during which some crewmembers deplane and the remaining crew from the original takeoff re-launch, this may be considered to be a continuation of the original aircrew sortie. MAJCOMs may establish MDS-specific crew requirements and procedures for aircrew continuation sorties.

Supervisory Aircrew or Staff Member—Personnel in supervisory or staff positions (API 6, 8, B, and D) who actively fly; or in positions (API 3, 4, C, and E) that require aircrew expertise but individuals are not required to fly.

Training Level—Assigned to individuals based on the continuation training aircrew status (basic aircraft qualification, basic mission capable, or mission ready/combat mission ready) they are required to maintain.

Training Period—Any training period determined by the MAJCOM or Wing in which training requirements are performed.

Unit Commander—When used in this instruction, “unit commander” refers to the squadron commander (or comparable level) or higher level within the chain of command.

Attachment 2

INSTRUCTIONS FOR USING AFTO FORM 781, ARMS AIRCREW/MISSION FLIGHT DATA DOCUMENT

A2.1. Purpose. The AFTO Form 781-series provides maintenance, inspection, service configuration, and flight operations records for weapon or support systems. AFTO Form 781, *ARMS Aircrew/Mission Flight Data Document*, is the source document for recording and reporting operational flight or training device information for each individual authorized to take part in a mission. This form is the primary record of both personnel and aerospace vehicle flying hours. It is the official record to validate flight pay eligibility for rated, CEA, and other non-rated**/non-CEA** officer and enlisted members required to fly. The original AFTO Form 781 must be maintained in the HARM office that services the unit to which the aircraft is assigned. This form is available for downloading on the e-publishing website at **www.e-publishing.af.mil**.

A2.2. Scope. These instructions apply to all members authorized to log flight or training device time in an airborne duty or position for the purpose of maintaining an official Air Force Flight Record.

A2.3. Responsibilities. The AFTO Form 781 is established by TO 00-20-1. In most cases, maintenance personnel are responsible for distributing and collecting these forms. Completing the AFTO Form 781 and other forms in the series is a joint responsibility of maintenance personnel and the pilot in command.

A2.3.1. The crew chief or alternate ensures a sufficient number of copies of AFTO Form 781 are onboard the aircraft and completes items 2 through 5 on a sufficient number of copies to fulfill mission requirements. If the forms are generated in advance, the pilot in command will confirm with maintenance personnel the correct data for items 2 and 3. (N/A for RPA units.)

A2.3.2. The pilot in command ensures the AFTO Form 781 is dated and properly completed to show all pertinent flight data and the flight time for all personnel authorized to take part in the flight. The pilot in command will initial block 40 IAW **Table A2.1**

A2.3.3. The completed AFTO Form 781 must be processed in the maintenance information system and delivered to the SARM for ARMS updating, then provided to the HARM office. (N/A for RPA units.)

A2.3.3.1. The local HARM office will provide the maintenance organization that services the aircraft assigned the necessary organization and location information to be entered in items 4 and 5 of AFTO Form 781. This ensures completed forms are sent to the proper SARM or HARM office for entry into ARMS. (N/A for RPA units.)

A2.3.3.2. Ensures an aviation resource manager or designated operations representative audits the unit's AFTO Forms 781 for accuracy and eligibility and initials in item 41 of the form before sending it to the HARM office. Where local procedures establish the HARM office as the auditing agency, the responsible individual from that office initials the form in item 41.

A2.3.3.3. The original AFTO Form 781 must be provided to the HARM office that services the unit to which the aircraft is assigned no later than 5 days after the end of the

month in which the flights were performed. For example, the Form 781 for a flight flown in March must be turned in to the servicing HARM office NLT 5 April. ***EXCEPTION:*** ARC units that track/maintain ACIP and CEFIP entitlement information may forward the AFTO Forms 781 to the servicing HARM office not later than the first day following two months after the month in which the flight was performed. In the preceding example, the forms would not be required to be turned into the HARM office until 1 June.

A2.3.3.3.1. SARM offices will not maintain duplicate copies of AFTO Forms 781 (including extracts). If changes are required after the flight information has been entered in ARMS and the form is at the HARM office, the pilot in command must contact the HARM office to make corrections.

A2.3.3.4. RPA units will maintain the original AFTO Form 781 in the HARM office of the unit designated to perform to the mission.

Table A2.1. AFTO Form 781 Entries.

ITEM	***ENTER***
2	MDS designator from AFTO Form 781F, item 12. Example F016A.
3	Enter the aircraft serial number. Use the following format for entry in ARMS, last two digits of the year, followed by a dash, then the last four digits of the tail number. Example: 83-0142.
4	Organization to which the aircraft is assigned. Show command designation in parentheses (for example, 52 FW (USAFE) and the four-letter code of the HARM office which serves that organization (obtain from the unit HARM/SARM Office). This will be the HARM office that processes and files the original forms.
5	The name of the installation whose HARM office services the unit charged for flying hours identified in item 4 and processes and files the original AFTO Form 781.
AFTO FORM 781 ENTRIES (CERTIFIED BY THE PILOT IN COMMAND)	
1	Date. Use the Greenwich Mean Time (GMT) date in the following ARMS compatible format: (Example) 22 Sep 2010.
6	The flight sequence of each particular leg of the flight.
7	Mission number assigned for this leg of the mission (MAJCOM option).
8	Authorized mission symbol for each flight. Aircrew may enter all flights on the same GMT date on a single AFTO Form 781.
9	International Civil Aviation Organization (ICAO) code for the base or airport where the aircraft takes off. If a flight is continued from a previous entry, enter “INFL.” Use “XXXX” for classified locations or locations without an official ICAO identifier (i.e. a CV-22 landing in a field).
10	Base ICAO code for the base or airport where the aircraft lands. If a flight is terminated without landing for a change in mission symbol, enter “INFL.” Use “XXXX” for classified locations or locations without an official ICAO identifier.

11	24-hour GMT clock time. The takeoff time is when the aircraft begins to move forward on takeoff roll.
12	24-hour GMT clock time. The landing is when the aircraft is on the ground after being airborne and any of the following conditions occur: (a) The engines are stopped and shutdown occurs at or before five minutes after touchdown. (b) The aircraft has been on the ground for five minutes after touchdown; however, a series of practice landings is considered one flight. (c) A change is made in the crew where a crewmember enplanes or deplanes. ***Note:*** When a flight starts before 2400 GMT and ends after GMT midnight (2400Z), record and report the flight on the date of takeoff. A separate AFTO Form 781 is not necessary.
13	Subtract takeoff time from landing time. Use the conversion table to the right to convert to hours and tenths, and enter the result.
14	Number of touch-and-go, full stop, and total landings.
15	Number of sorties accomplished. A sortie covers a flight from first take off to landing as described in block 12; however, if any flight entry is split (INFL), the sortie will be recorded on the flight that lists final landing.
16	Special use as specified by MAJCOM.
17	Flight authorization number generated in the SARM as specified in AFI 11-421. (MAJCOM option.)
18	Unit issuing the flight authorization and designated to perform this mission will be annotated using the four-digit unit number. Use leading zeros when the unit number has fewer than four digits (0179AW).
TOTALS	Sum of flight sequences “a” through “f” for total flight time, landings, and sorties at the end of the mission.
19	Four-digit unit number to which the crewmember is assigned/attached for flying purposes. Use leading zeros when the unit number has fewer than four digits.
20	Last four digits of the SSN of the crewmember. An error in this entry will result in time being lost or credited to another crewmember.
21	Crewmember’s last name (printed). May use additional characters if another member in the unit has the same last name.
22	Flight Authorization (FA) Duty Code assigned on the FA to the crewmember for this mission. This code cannot be higher than the individual’s current qualification, but will indicate duties that the individual crewmember is scheduled to perform on the mission. For example, if the individual is an IP, but is scheduled to perform MP duties on a mission, the individual will be listed as an MP on the Flight Authorization. Refer to **Table A2.3** for a complete list of duty codes. ***Note:*** The only time the FA code will not match the scheduled duties on the FA is for extenuating circumstances. The AC must document the reason in the remarks of the AFTO Form 781. For example, a pilot was scheduled to perform IP duties in

	conjunction with upgrade training for a second pilot; however, the upgrading individual was DNIF and did not fly, so the pilot only performed primary duties. MP is logged with primary time and the AC documents the reason in the remarks section. When using the FA more than one day, log FA Duty Code actually performed and annotate in remarks if different from the FA.
23-28	Times in hours and tenths for each category as defined in **Chapter 3** of this instruction. The total time in item 28 cannot exceed the grand total in item 13 and total of items 23 through 27 cannot exceed item 28.
29	Total number of sorties for this crewmember. Entry is normally the grand total (see item 15, above).
30, 33, 34, 36	Hours and tenths of time performed in night, instrument, simulated or NVG conditions, as defined in **Chapter 3** of this instruction.
35, 37	Number of Combat and Combat Support Sorties flown that meet requirements as defined in **Chapter 3** of this instruction.
38	Air Reserve Component Flight Duty Status Code for the crewmember, if applicable. If used: 1=Active Duty, 2=Unit Training Assembly (Inactive Duty), 3=Flying Training Period (Inactive Period), 33=Dual Additional Flying Training Period (Inactive Duty), 4=Civilian (ART). Include separate lines to record the flying time accomplished in each Flying Duty Status Code.
39	Initials of maintenance personnel at the debriefing who reviewed the form. (N/A for RPA units geographically separated)
40	Initials of the pilot in command who certifies the form for accuracy. For multiple sorties, if the pilot in command changes, the individual acting as the pilot in command must initial for their particular sortie in the sortie block. If the pilot in command changes during any single sortie, the last individual to act as the pilot in command for that sortie will initial in the sortie block.
41	Initials of the unit operations officer or Aviation Resource Manager (ARM) who verifies the accuracy and legibility of the form prior to entry into ARMS.
42	Date (e.g., 22 Sep 2010) and initials of the ARM who input and audited the form.
43	Date (e.g., 22 Sep 2010) and initials of the ARM who audited and processed the form.

A2.4. Extract AFTO Form 781. Each individual on the form whose flight records are maintained by another HARM office prepares a data extract photocopy of the original AFTO Form 781 to be sent, usually within five duty-days, to that member's HARM office. Extracted individual(s) will place their squadron's contact information (unit designation and SARM or HARM DSN/FAX number) in the remarks section of the AFTO Form 781. If more than one individual named on the form is serviced by the HARM office, a single data extract copy may be used. For example Captain Grengs, a pilot from Minot AFB, flew a mission at Grand Forks AFB. A photocopy of the AFTO Form 781 is made, certified in item 43, and sent to the HARM office

at Minot. Extracts at the same base for aircrew members serviced by the same HARM office are not authorized.

A2.4.1. Individuals whose flight records have been closed out to transfer custody must prepare a data extract form for each authorized flight during that period.

A2.4.2. The data extract AFTO Form 781 is an exact copy of the original AFTO Form 781.

A2.4.3. Upon receipt of an extract, member's servicing SARM/HARM personnel will lightly line through individual mission data lines of members not in the local ARMS database, leaving only the members they will enter in ARMS. The SARM office responsible for management of the original AFTO Form 781 will have a line lightly drawn through members who were extracted (not from aircraft's home station).

A2.4.4. The data extract form is identified and certified in item 43, either by a commissioned officer (preferably the pilot in command), a government civilian (when pilot in command), or by the HARM Chief/Superintendent.

A2.4.5. See **Attachment 3** for an extract authorized for non-operational, long TDYs.

Table A2.2. Authorized Mission Symbols.

Authorized Mission Symbols (***Note:*** Only mission symbols listed in this table are valid. In ARMS the mission symbol is a five-character field. The first two characters must be IAW this table. MAJCOMs may assign additional characters as required (see Notes 1 and 2 at end of table).	
CA, CC, Air Rescue CF Coded Aircraft Missions, and TF Coded Aircraft Missions as applicable	
A1	**Scheduled Flights**. Missions where the main goal is to move cargo or passengers on a scheduled frequency.
A2	**Scheduled Air Evacuation Flights.** Missions where the main goal is to move patients on a scheduled frequency.
A3	**Nonscheduled Air Evacuation Flights.** Missions where the main goal is to move patients who require immediate evacuation to the proper treatment facility.
A4	**Nonscheduled Logistics.** Missions where the main goal is to move cargo or passengers on other than scheduled flights.
A5	**Positioning or Repositioning.** The nonproductive part of a flight that is required to locate an aircraft at a station for onloading or returning an aircraft to home station.
A6	**Tactical Training.** Missions where the main goal is joint airlift that includes personnel and equipment or supply drops.
A7	**Other.** Classified or other special missions.
A8	**Contingency Operations.** Contingency missions directed by HQ USAF.
A9	**United Nations (UN) Missions.** Missions in support of UN operations, as directed by HQ USAF.

SUPPORT MISSIONS (CA and Z coded operational support aircraft only)	
S1	**Administrative.** Missions in which the main purpose is aerial transportation of personnel accomplishing executive and administrative functions. These include staff or command ordered flights. Also includes Air Reserve Officer Training Corps (ROTC) and Civil Air Patrol (CAP) orientation flights and similar flights.
S2	**Personnel.** Missions in which the main purpose is to move personnel by air. This symbol includes courier flights. It does not include flights by Air Mobility Command (AMC) common user passenger or cargo transports completing single manager operations for airlift services.
S3	**Material and Supplies.** Missions in which the main purpose is to move material and supplies by air. Does not include flights by AMC common user passenger or cargo transports completing single manager operations for airlift services.
S4	**Logistics.** Missions in which the main purpose is to move personnel, material, and supplies by air. This symbol includes flights in direct support of combat and combat support unit operations. Does not include flights by AMC common user passenger or cargo transport.
S5	**Special.** Missions in which the main purpose is to complete specific special activities of the Air Force and other governmental agencies, such as: target missions for air defense purposes, tow missions for defense and tactical forces, local search and rescue, civil relief, mercy missions and air demonstration flights.
S6	**Navigational Aids (NAVAIDS) Check.** Missions in which the main purpose is to flight-check radar and NAVAIDS.
S7	**Aircrew Qualification.** Missions in which aircrew members who occupy aircrew or designated instructor crew positions complete standardization and instrument check flights as well as qualification and currency flights.
S8	**Support Training.** Missions in which the main purpose is to meet semiannual flight requirements (including instrument and qualification checks) as prescribed by this instruction. This symbol is used by "behind-the-line" aircrews who are not assigned to designated aircrew positions.
TRAINING MISSIONS (*Note:* T mission symbols used by force structure aircraft in assignment codes CB, CC, CF, CA, and TF.)	
T1	**Student Training.** Missions where the main goal is to instruct and train pilots and air crew under the direction of Air Education and Training Command (AETC) or other USAF activities engaged in formal student instruction (include flying of instructors in the course of student training).
CA, Air Rescue CF Coded Aircraft Missions, and TF Coded Aircraft Missions as applicable	
T2	**Formal Major Weapon System (MWS) Training.** Instruction and training of pilots and crews undergoing initial MWS crew training in designated Formal Training Units.

T3	**Operational Training.** Missions where the main goal is gunnery, bombing, reconnaissance, navigation, instrument, target missions for air defense purposes, towing targets, search and rescue, transportation of cargo or personnel (excludes flights of AMC common user passenger or cargo transports accomplishing single manager operations for air lift service), and continuation training.
T4	**Special.** Missions in which the main purpose is the direct support of nonmilitary activities such as civil relief, mercy missions, health, communications, public works, and others contributing to the economic and social well-being of the nation.
T5	Reserved for future use
T6	Low Level Missions (defined by MAJCOMs).
T7	Reserved for future use
T8	**Tanker Task Force Support.** Missions flown by TDY (deployed) tanker aircrews in support of regional tanker task forces (excluding counter narcotics).
T9	Reserved for future use.
OPERATIONS MISSIONS	
O1 / O2	As directed by HQ USAF.
O3	**Aircraft Delivery.** Aircraft delivery flights under the control of Air Combat Command (ACC), including inter-command transfers; US Air Force, Navy, or other pilots attached to ACC for purposes of delivering aircraft delivery organizations as well as "borrowed" crews. Also includes aircraft deliveries other than under ACC control.
O4	**Test.** Missions where the main goal is engineering testing of aerospace vehicles (including the airframe, propulsion units, and components that are integral parts of the vehicle being tested).
O5	**Direct Test Support.** Missions which are performed in direct support of research, development, test or engineering program for data acquisition. Includes flights to and from test locations.
O6	**Indirect Test Support.** Missions in which the main goal is to accomplish simulated mission profiles in preparation for approved test programs. Included in this category are missions in E, D and CB coded aircraft in which the main goal is proficiency flying training, initial checkout, requalification, annual instrument and proficiency check, etc.
O7	**Special (Air Force Materiel Command [AFMC] use only).** Missions performed in E and CF coded aircraft that do not fall within the categories explained above and missions in B or D coded unairworthy aircraft to relocate a damaged aircraft to a repair facility. Includes missions such as search and rescue, demonstrations, record attempts, flight inspections, traffic control and landing system (TRACALS) evaluations, and air traffic control operational evaluations.
O8	**Maintenance Tests.** Missions where the main goal is to perform functional check flights after completing inspections or maintenance to make sure that the aircraft is

	airworthy and capable of mission accomplishment. This symbol applies to aircraft in all assignment codes.
CA and Air Rescue CF Coded Aircraft Missions	
O9	**Operational Reconnaissance.** Aerial activity or engagements conducted by committed units or aircraft that have as a main goal higher headquarters directed reconnaissance missions that do not fall in the other categories explained above. This symbol applies to peacetime air defense scrambles.
P1-P5	As directed by HQ USAF (See Note 1).
P6	Counter-Narcotics Support. Missions flown in support of Counter-Narcotics operations.
P7-P9	As directed by HQ USAF (See Note 1).
R1-R9	As directed by HQ USAF (See Note 1).
C1	AIRBORNE ALERT MISSIONS (defined by MAJCOMs).
C2-C9	As directed by HQ USAF (See Note 1).
A - Z	Mission symbol letters not listed are to be used as directed by HQ USAF. Units must receive permission from HQ USAF/A3O-AT prior to using mission symbols not specified in this table.
OPERATIONS NOTES:	
1. For the P, R, and C mission symbols, use the following third character suffixes to identify missions flown by specific MAJCOM: AMC use A, B, C; ACC use D, E, F; USAFE use G, H, I, J; PACAF use K, L, M; AFSOC use N, O, P; ANG use Q, R, S; and AFRC use T, U, V; AETC use W, X, Y and AFMC use Z. Guard and Reserve units will coordinate with their gaining MAJCOM to determine if the Guard/Reserve or active duty MAJCOM suffix will be used. MAJCOMs will provide HQ USAF/A3O-AT a copy of directives on the use of these mission symbols.	
2. For all missions flown in designated combat areas, make the third character an A to differentiate those combat missions where aerial delivery/recovery of airborne forces/equipment, ordnance expended, or direct exposure to hostile fire occurred. The suffix B is used on designated combat missions established by HQ USAF that result in personnel tour curtailment or other personnel actions.	
TRANSPORTATION WORKING CAPITAL FUND (TWCF) FUNDED AIRCRAFT MISSION CLASSIFICATIONS (L, M, and N for force structure aircraft in assignment codes CA, CC, TF, and IF)	
L1-L8	**Contingency.** Special transport missions that support contingency plans and test exercises. HQ AMC assigns symbol in the operation order (OPORD). If no OPORD is writ ten, AMC's Tanker Airlift Control Center (TACC) assigns symbol to be used.
M1	**Cargo.** Scheduled transport missions where the main goal is to move cargo.
M2	**Passenger or Patients.** Scheduled transport missions in which the main goal is to

	move passengers or patients. Suffix "L" is reserved for patient flights. Suffix "P" is reserved for passenger flights.
M3	**Cargo or Passengers.** Scheduled transport missions in which the main goal is to move mixed loads (cargo or passengers).
M4	**Positioning for Channel.** Locating an aircraft at a station for channel traffic onloads. This includes missions from the offload station of a special assignment airlift mission (SAAM) or contingency mission to the onload station of a channel traffic mission.
M5	**Depositioning for Channel.** Returning an aircraft to home station from channel traffic offload station and to return an aircraft to backup position from an offload or termination point of any mission where backup equipment has been used.
M6	**Special Assignment.** Transport missions in which the main goal is to complete special assignment airlift missions. These missions include hours logged from the time the air craft departs home station or is diverted from channel traffic (scheduled mission) until the aircraft returns to channel traffic operations.
M7	**Non-revenue.** Nonscheduled missions operated in support of the airlift force other than exercises.
M8	**Joint Airborne or Air Transportability Training.** Transport missions where the main goal is joint airborne training.
N1	**Training and Standardization.** Training and standardization evaluation flights for personnel assigned or attached to a tactical or transport unit.
N2	**Tactical Training.** Unilateral tactical training other than joint airborne training. This includes airdrop, formation flying, and low-level navigation training missions.
N3	**Search.** Transportation Working Capital Fund (TWCF) funded aircraft diverted to perform search missions. Symbol is used starting with time of diversion until aircraft returns to normal mission.
CA and Air Rescue CF Coded Aircraft Missions	
N4-N8	**Reserved for Future Use.** These symbols are used to complement the contingency mission symbols as assigned by TACC.
SIMULATOR TRAINER CLASSIFICATIONS	
Q1	**Student Training.** Instruction and training of pilots and crews under the direction of AETC or other US Air Force activities engaged in formal student instruction.
Q2	**Mission Training.** Synthetic trainer or simulator missions where the main goal is training tactical and support aircrews.
Q3	**Maintenance Tests.** Performance of functional check flights.
Q5	**Simulator Test.** Missions to acquire data or verify simulator performance, handling qualities, and systems.
SIMULATOR NOTES:	

1. Suffix “E” is reserved for engineering tests (hardware, software design, or development).
2. Suffix “F” is reserved for human factors research missions.

A2.4.6. **Flight Authorization Duty Codes.** Flight authorization duty codes identify the aircrew member’s flight duty status. They are four (or more) letter codes and MAJCOMs have the option to specify the third, fourth and any additional characters.

Table A2.3. Flight Authorization Duty Codes.

Aircrew Qualification Codes (First Character)		**Valid to allow aircrew members to meet requirements for OFDA, ACIP, CEFIP, or HDIP**
E	Evaluator certified	Yes
F	Qualified in basic weapon system	Yes
I	Instructor qualified	Yes
M	Mission qualified in weapon system	Yes
O	Crewmembers (active or inactive) in aircraft in which they are not qualified (grades Colonel and above)	No
S	Student enrolled in Undergraduate Flying Training	Yes
U	Obtaining initial qualification or requalification in the weapon system	Yes
X	Crewmembers (active or inactive) in aircraft in which they are not qualified (grades Lt Colonel and below)	No
Z	Non-Interference Commander	No (Note 5)
Aircrew Position Identifier (Second Character)		
A	Astronaut (rated officer performing “non-crew” space station duty) or Other Aircrew Member (nonrated)	Yes
B	Boom Operator	Yes
C	Copilot	Yes
D	Parachutist	Yes
E	Electronic Warfare Officer or Defensive System Operator	Yes
F	Flight Engineer	Yes
G	Aerial Gunner	Yes
H	Flight Nurse	Yes
J	Pararescue Member	Yes

K	Airborne Communications System	Yes
L	Loadmaster or Dropmaster	Yes
M	Airborne Mission Systems/Specialist	Yes
N	Navigator/Combat Systems Officer	Yes
O	Air Battle Manager	Yes
P	Pilot	Yes
Q	Airborne Linguist/Airborne ISR Operator	Yes
R	Navigator-Bombardier or Offensive Systems Operator	Yes
S	Flight Surgeon	Yes
T	Flight Attendant	Yes
U	Remotely Piloted Aircraft Duties	Yes (Note 8)
V	Airborne Battle Management Systems (Sensor Operator)	Yes
W	Weapon System Officer	Yes
X	Non-interference	No (Note 5)
Y	Rated Flying Duties	Yes (Note 7)
Z	Operational Support, Airborne Battle Staff, Airborne Emergency Actions Officer, Mission Crew Commander authorized non-crew in-flight duty	Yes (Note 6)

To meet OFDA, ACIP, CEFIP, or HDIP requirements, aircrew members must comply with the following:

1. Log their flight time using both an aircrew certification code and position identifier valid to credit time (a “Yes” in column 3).
2. Log primary, secondary or instructor flight time. Evaluator flight time is also creditable when the evaluator is current in the aircraft. Otherwise the evaluator should use the aircrew certification code O or X.
3. Be attaining or maintaining qualification in the aircraft.
4. Operational support fliers must log primary time to meet the requirement for HDIP. When not performing primary duties, they will log other time. Operational Support medical technicians on AOs will only log primary time when performing in-flight medical assistance to actual patients. Only other time is authorized for periods of the mission when medical assistance is not being provided. ***EXCEPTION:*** AFSPC and AETC medics will log primary time for that portion of the mission when they perform required temporary CEA duties on aircraft equipment (hoists and litters).
5. Non-interference fliers (other than flying unit commanders) must receive HQ USAF/A3O-AT approval to log flying time on AFTO Form 781 and enter data into

ARMS. See paragraphs **3.2.1.5.2** and **3.2.1.5.3**.

6. Rated officers and CEAs will log second character crew position Z when tasked to perform in-flight non-crew duties (e.g. safety observer). Include a remark on the back side of the AFTO Form 781 to explain the duty performed.
7. Must receive HQ USAF/A3O-AT approval to log primary time on AFTO Form 781.
8. Fifth character will be V for RPA Pilots and S for RPA Sensor Operators.

Note: MAJCOMs may specify additional characters and may provide supplemental guidance.

Attachment 3

ARMS AIRCREW/MISSION FLIGHT DATA EXTRACT

A3.1. Purpose. The AF Form 3520 is the source document for recording and reporting flight training and space shuttle/space station information for each individual authorized to take part in missions. This form is primarily used for aircrew members attending qualification school or aircrew logging space time. Aircrew who fly operational missions off-station will use/make an exact copy of the original AFTO Form 781, certify this as a true extract, and turn in the form/copy to their HARM or SARM office for updating in ARMS. This is an official record to validate flight pay eligibility for rated, CEA, and other non-rated officer and enlisted members required to fly while TDY. This form will not be used for flights involving combat/combat support operations. The original AF Form 3520,*ARMS Aircrew/Mission Flight Data Extract*, must be maintained in the HARM office that services the unit to which the member is assigned. This form is available for downloading on the Air Force e-Publishing website at **www.e-publishing.af.mil**.

A3.2. Scope. The instructions listed on the reverse side of the AF Form 3520 apply to all rated, CEA, and other non-rated officer and enlisted members authorized to log flight time while attending training to attain qualification in an aircraft or training device and to log authorized flights in non-USAF aircraft (includes space shuttle and space station) for the purpose of maintaining an official Air Force Individual Flight Record. Source documents used to transfer flight data from non-USAF aircraft are maintained as source documents IAW AFMAN 37-139. Aircrew who fly operational missions on non-USAF aircraft will use an AFTO Form 781 to document and record flight activities.

A3.3. Responsibilities. SARM/HARM office personnel are responsible for distributing and collecting these forms. Completing the AF Form 3520 is a responsibility of the aircrew member.

Attachment 4

INSTRUCTIONS FOR USING AF FORM 4327, ARMS FIGHTER FLIGHT AUTHORIZATION, AND AF FORM 4327A, CREW FLIGHT AUTHORIZATION (FA)

A4.1. Purpose. Unit commanders will use the AF Forms 4327 and 4327a to authorize the use of USAF aircraft to perform a specific mission(s), and to authorize aircrew members required to perform in-flight duties. Use the AF Form 4327 to authorize flights of utility, fighter, and trainer aircraft for missions that originate and end at the same location. Use the AF Form 4327a to authorize all other aircraft missions and for fighters/trainers (if desired). These are critical documents used during mission review to validate duties performed/logged on the AFTO Form 781, and for reimbursement of temporary duty expenses. Forms are available for downloading on the Air Force e-Publishing website at **www.e-publishing.af.mil**.

A4.1.1. Additional members authorized to fly, who are not required to perform aircrew duties (except for noninterference fliers and MEP when specifically authorized [see paragraph **A4.1.2**]) must be listed on a passenger manifest.

A4.1.2. The FA accounts for aircrew personnel required/authorized to perform in-flight aircrew duties and the passenger manifest lists all additional members approved to fly on the aircraft, but not performing specific aircrew duties on that mission. MEP and non-interference fliers not on AOs may be listed on the FA, in the Remarks section; if not listed on the FA, these individuals will be placed on the passenger manifest. The FA and passenger manifest combined account for all personnel on the aircraft.

A4.1.3. Units may use computer-generated programs to produce AF Forms 4327/4327a in lieu of the actual form program. If used, computer-generated forms must duplicate AF forms located at the AFDPO e-publishing web site.

A4.2. Scope. These instructions apply to all flying unit commanders with operational control of USAF aircraft who direct the use of aircraft and aircrews in support of command operations; and AE, pararescue unit and ANG Senior Scout unit commanders who publish AE/PJ/Senior Scout flight authorizations for aircrew members assigned to their units who are required to perform aircrew duties on the mission.

A4.3. Responsibilities. AF Forms 4327 and 4327a are established by this instruction. Aviation Resource Management personnel are responsible for publication of these forms and performing Go/No-Go validation (review of ARMS products and member's AOs) during pre-mission review.

A4.3.1. When additional aircrew members are added after completion of the FA, the authenticating official, pilot in command, or flight lead must confirm Go/No-Go requirements are accomplished by validating ARMS training products and AOs prior to flight.

A4.3.2. The completed FA and the AFTO Form 781 will be used during post mission review to ensure proper documentation and accounting for all aircrew members authorized to perform duties. The pilot in command will document deviations between scheduled duties on the FA (Duty Position) and actual duties performed in the remarks of the AFTO Form 781.

A4.3.3. The completed FA is normally filed with other mission paperwork. The Air Force *Records Disposition Schedule (RDS)* lists the minimum disposition requirements of this form. MAJCOM supplements may require longer retention times for the form.

Table A4.1. AF Form 4327 Entries.

Block	**Enter**
Home Station	List home station of aircraft. (Example - Langley AFB, VA)
Order No	FA number assigned sequentially by Fiscal Year. (Example - 10-0100)
Unit	Unit which aircraft are assigned or chopped.
Depart on or about	Scheduled departure date Use numerical digits for year, month, and day. (Example: 20100505)
Issue Date	Date FA is authenticated.
Signature	Signature of Authenticating Official. Must be designated (in writing) by the OG/ CC or equivalent. Once authenticated any changes must be initialed on the original FA by a designated official.
Line #	Aircraft line number from the daily flying schedule.
Name	Full name of each individual authorized to perform duties.
Rank	Abbreviated rank of each individual.
Crew Position	Enter individual's current aircraft qualification from AF Form 8/8a. For individuals flying as Evaluators, enter qualification from the unit certification document.
Duty Position	Enter duty position code for scheduled duties IAW **Table A2.3**.
Security Clearance	Enter the member's security clearance.
MDS	Aircraft MDS. (Example - F015E)
Msn Sym	Mission Symbol IAW **Table A2.2** of this instruction and additional MAJCOM guidance as necessary.
Call Sign	Enter Flight/Aircraft call sign.
Tail Nbr	Aircraft serial number. (Example - 98-0829)
Remarks Code	MAJCOM/Units approved remarks code as required.
ETD/ETA	Estimated Time of Departure/Arrival.
ATD/ATA	Actual Time of Departure/Arrival. Entered upon completion of mission.
Sortie Duration	Actual sortie duration may be entered upon completion of mission.
Signature of the Pilot in Command	PIC sign.

Initials for Changes	Initials of authorized personnel for changes to aircrew names and/or duty positions made after authentication.
Note: Only members on AOs, required to perform in-flight duties on a specific mission, are authorized to be on flight authorizations IAW paragraphs **1.6.2.1** and **1.8.1** of this instruction. MEP may be listed in the Remarks section.	

Table A4.2. AF Form 4327a Entries.

Item	Enter
1	Use numerical digits for year, month, and day of date FA is prepared. (Example – 20100506)
2	Mission number. Refer to MAJCOM supplement for specific criteria
3	List place of departure. For example, Minot AFB, ND
4	Enter final destination location. For example, Charleston AFB, SC. List enroute stops in the Remarks section and include explanations as necessary.
5	Mission Symbol IAW **Table A2.2** of this instruction and additional MAJCOM guidance as necessary.
6	Scheduled departure date and time. (Example - 20100507 1930)
7	Scheduled return date and time. (Example - 20100508 0230)
8	Aircraft MDS (Example - C017A)
9	Aircraft serial number. (Example- 01-0381)
10	Enter Aircraft call sign.
11	Crew Information
	A. Full name of each individual authorized to perform duties
	B. Abbreviated rank of each individual
	C. SSN: Full SSN; last four, or may be empty (MAJCOMs define requirement)
	D. Security clearance.
	E. Enter individual's current aircraft qualification from AF Form 8/8a. For individuals flying as Evaluators, enter qualification from the unit certification document.
	F. Enter duty position code for scheduled duties IAW **Table A2.3.**
	G. Remarks Code (as applicable). MAJCOMS and units may define codes.
	H. Four-digit unit number to which the crewmember is assigned/attached for flying/jumping. Use leading zeros when the unit number has fewer than four digits.

	I. Enter each individual's crew number (if used).
	J. Initials of authorized personnel for changes made after authentication.
12	Units may enter remarks and remarks code legend as required. MAJCOMs may provide additional guidance. List MEP in the Remarks section.
13	Date FA is authenticated.
14	FA number assigned sequentially by Fiscal Year. (Example - 10-0101)
15	Distribution per MAJCOM/Unit guidance
16	Go/No-Go verification will be completed by a qualified 1C0X2 or designated representative and reviewed by the pilot in command (PIC). AE/PJ/Senior Scout flight authorizations do not require AC initial, when published by an AE/PJ/Senior Scout unit. When additional crewmembers are added after the FA is authenticated, the pilot in command will certify that Go/No-Go verification was completed.
17	As a minimum enter unit designation and complete address and DSN phone /fax number. MAJCOMs may provide additional requirements.
18	Complete signature element of authenticating official. Must be designated (in writing) by the OG/CC or equivalent. Once authenticated any changes must be initialed on the original FA by a designated official.
19	Fund cite information when FA will be used for reimbursement of temporary duty expenses.
20	Continuation of Item 11, complete as necessary.
21	Continuation of Item 12, complete as necessary.

NOTES:

1. Only members on AOs, required to perform in-flight duties on that mission are authorized to be on flight authorizations IAW paragraphs **1.6.2.1.** and **1.8.1.**

2. Since the AE/PJ/Senior Scout flight authorization is not a stand alone form, the pilot in command must validate that specific mission elements (blocks 1 thru 10) on AE/PJ/Senior Scout flight authorizations match the aircraft's flight authorization for that specific mission.