BY ORDER OF THE SECRETARY OF THE AIR FORCE

AIR FORCE MANUAL 91-201

12 JANUARY 2011

Incorporating Change 1, 22 June 2012

AIR COMBAT COMMAND Supplement

3 JANUARY 2013

Safety

EXPLOSIVES SAFETY STANDARDS

COMPLIANCE WITH THIS PUBLICAITON IS MANDATORY

ACCESSIBILITY: This publication is available digitally on the e-Publishing website at **www.e-publishing.af.mil** for downloading or ordering

RELEASABILITY: There are no releasability restrictions on this publication.

OPR: AFSC/SEW — Certified by: AF/SED (Mr. Roberto I. Guerrero)

Supersedes: AFMAN 91-201, 17 November 2008 — Pages: 499

(ACC)

OPR: HQ ACC/SEW — Certified by: HQ ACC/SE (Col Sidney F. Mayeux)

Supersedes: AFMAN 91-201_ACCSUP, 17 September 2009 — Pages:22

This Manual implements Air Force Policy Directive (AFPD) 91-2, Safety Programs, and DoD 6055.09-M, Volumes 1–8, DoD Ammunition and Explosives Safety Standards. It establishes a central source for explosive safety criteria. It identifies hazards and states safety precautions and rules when working with explosives. It applies to everyone involved in explosives operations of any kind at Air Force, Air National Guard and Air Force Reserve-owned or leased facilities and to US-titled ammunition in contractor or host-nation facilities. Compliance is mandatory, but only as minimum safety standards. The use of the name or mark of any specific manufacturer, commercial product, commodity, or service in this publication does not imply endorsement by the Air Force. Send major command (MAJCOM) supplements to AF/SE, 9700 Avenue G SE, Kirtland AFB NM 87117-5671, for approval before publication. Send recommended changes on AF Form 847, Recommendation for Change of Publication, any conflicts with other Air Force directives as well as general correspondence about the content of this Manual through command channels to AFSC/SEW, 9700 G Avenue SE, Kirtland AFB NM 87117-5670. Ensure that all records created as a result of processes prescribed in this publication are maintained in

accordance with AFMAN 33-363, Management of Records, and disposed of in accordance with the Air Force Records Disposition Schedule (RDS) located at https://www.my.af.mil/afrims/afrims/afrims/rims.cfm.

(ACC) AFMAN 91-201, 12 January 2011, is supplemented as follows. This supplement applies to anyone involved with explosives operations of any kind at Air Combat Command (ACC)-owned or leased facilities and to US-titled ammunition in contractor or host-nation facilities. It applies whenever using chemical ammunition, defense biological research material, or toxic substances with explosives or ammunition. This publication applies to all ACC personnel involved in explosives operations, including Air National Guard and Air Force Reserve Command units collocated on ACC installations. ACC units are authorized to publish supplements to AFMAN 91-201 establishing unit unique procedures and requirements. Wing supplements to AFMAN 91-201 will be forwarded to the appropriate NAF weapons safety office for review and approval. Numbered Air Force (NAF) supplements to AFMAN 91-201 will be forwarded to the ACC Weapon Safety Division (HQ ACC/SEW) for review and approval. Refer recommended changes and questions about this publication to the Office of Primary Responsibility (OPR) using Air Force (AF) Form 847, *Recommendation for Change of Publication;* route AF Forms 847 from the field through the appropriate functional's chain of command. Ensure that all records created as a result of processes prescribed in this publication are maintained in accordance with Air Force Manual (AFMAN) 33-363, *Management of Record*s, and disposed of in accordance with Air Force Records Information Management System (AFRIMS) Records Disposition Schedule (RDS) located at **https://www.my.af.mil/afrims/afrims/afrims/rims.cfm**. Contact supporting records managers as required.

SUMMARY OF CHANGES

This interim change implements guidance for handling Joint Test Assemblies, eliminates MAJCOM interim ESP approval, modifies (Event) Operational Waiver process, clarifies placarding of multicubes, maintenance of land in and around storage locations, requirements for risk assessments, and Airfield deviations, Lightning Protection System design and operational requirements, and updates Intentional Detonation Site requirements . A margin bar (|) indicates newly revised material.

(ACC) This document incorporates minor updates throughout, therefore a complete and thorough review is recommended. Some specific changes include guidance on seeking approval for foreign explosives being used in conjunction with joint exercises; requirement for surge protection compliance; guidance on base boundary violations during air show events; actions taken during lightning watches, and requirements to protect Protection Level (PL) 1 and PL 2 assets from explosives. Chapters 15 and 17 of this supplement are new.

Chapter 1—INTRODUCTION AND EXCEPTION PROGRAM **30**

Section 1A—Explosives Safety General Instructions 30

1.1. Purpose. 30

1.1. (ACC) Purpose. 30

1.2. Scope. 30

Section 1B—Exception Program 33

1.3. General. 33

1.4. Deviations. 34

1.5. Operational Waivers. 35

1.6. Waivers. 36

1.7. Exemptions. 37

1.8. SECAF Waivers and Exemptions for New Construction. 37

1.9. Exceptions for Non-DoD Explosives Activities on Air Force Installations. 38

1.10. Waiver and Exemption Information Requirements. 38

1.11. HAF-Level Waiver and Exemption Information Requirements. 39

1.12. Waiver or Exemption Decision Nomograph. 40

1.13. Periodic Reviews for Exceptions. 41

1.13. (ACC) Periodic Reviews for Exceptions. 41

1.14. Cancellation of Waivers and Exemptions. 42

1.14. (ACC) Cancellation of Waivers and Exemptions. 42

Table 1.1. Likelihood of a Mishap. 42

Table 1.2. Exposure. 44

Table 1.3. Possible Consequences of a Mishap. 44

Table 1.4. Periodic Review Levels for HAF-Level Waivers and Exemptions. 45

Figure 1.1. Exception Decision Nomograph–Day-to-Day Operations. 46

Figure 1.2. Exception Decision Nomograph–Contingency and War Plans. 47

Figure 1.3. Nomograph Plotting Example. 48

Chapter 2—REACTION EFFECTS **49**

Section 2A—Principal Effects of High Density (HD) 1.1 Events 49

2.1. Blast. 49

2.2. Fragments. 51

2.3. Thermal Hazards. 51
2.4. Groundshock and Cratering. 51
2.5. Expected Consequences. 52
Section 2B—Principal Effects of HD 1.2 Events. 55
2.6. Blast. 55
2.7. Fragments. 55
2.8. Thermal Hazards. 55
2.9. Ejected Items. 55
2.10. Propelled Items. 55
2.11. Firebrands. 56
2.12. Expected Consequences. 56
Section 2C—Principal Effects of HD 1.3 Events 56
2.13. Gas Pressures. 56
2.14. Fragments. 56
2.15. Thermal Hazards. 56
2.16. Propelled Items. 57
2.17. Firebrands. 57
2.18. Expected Consequences. 57
Section 2D—Principal Effects of HD 1.4 Events 57
2.19. Blast. 57
2.20. Fragments. 57
2.21. Thermal Hazards. 57
2.22. Firebrands. 57
2.23. Compatibility Group (CG) S Items. 57
2.24. Expected Consequences. 57
Section 2E—Principal Effects of HD 1.5 and HD 1.6 Events 57
2.25. HD 1.5 Effects. 57
2.26. HD 1.6 Effects. 57
Table 2.1. Expected Peak Incident Pressures From HD 1.1 Events. 58
Table 2.2. Probability Of Window Breakage From Incident Pressure. 58
Table 2.3. General Blast Effects On Personnel–Eardrum Rupture. 59
Table 2.4. General Blast Effects On Personnel–Lung Damage. 60

Table 2.5. General Blast Effects On Personnel – Lethality Due To Lung Rupture. 60

Chapter 3—HAZARD CLASSIFICATION 61

Section 3A—DoD Hazard Classification System 61

3.1. Purpose of Hazard Classification. 61

3.2. Responsibility for Hazard Classification. 61

3.3. Hazard Classification Authorities. 61

3.4. Standards for Determining DoD Hazard Classification. 61

3.5. Description of DoD Hazard Classification System. 61

3.6. Net Explosive Weight and Net Explosive Weight for Quantity-Distance. 62

3.7. Requirement for DoD Hazard Classification. 62

Section 3B—Storage and Transportation Without DoD Hazard Classification 63

3.8. Storage and Transportation Without DoD Hazard Classification. 63

3.9. Explosives With DOE Hazard Classifications. 63

3.10. DoD-Owned Non-Stock-Listed Commercial Explosives. 64

3.11. Manufacturing, Research and Development Items. 65

3.12. Foreign Explosives. 65

3.13. Non-DoD-Owned Explosives. 66

Section 3C—Hazard Classification of Unpackaged Items 68

3.14. Hazard Classification of Unpackaged Items. 68

Section 3D—Class 1 Divisions and Subdivisions 69

3.15. HD 1.1 – Mass-explosion. 69

3.16. HD 1.2 – Non-mass Explosion, Fragment Producing. 69

3.17. HD 1.3 – Mass Fire, Minor Blast or Fragment. 70

3.18. HD 1.4 – Moderate Fire, No Significant Blast or Fragment. 70

3.19. HD 1.5 – Explosive Substance, Very Insensitive (With Mass Explosion Hazard). 70

3.20. HD 1.6 – Explosive Article, Extremely Insensitive. 70

Section 3E—Compatibility Groups and Sensitivity Groups 71

3.21. Storage and Transportation Compatibility Groups. 71

3.22. Sensitivity Groups. 72

Chapter 4—RISK ASSESSMENTS AND PROTECTION PRINCIPLES 73

Section 4A—Risk Assessments 73

4.1. Requirements for Risk Assessments. 73
4.2. Risk Assessments. 73
4.3. Risk Management (RM). 73
4.4. System Safety. 74
4.5. Professional Assistance for Risk Assessments and System Safety Analyses. 74
Section 4B—Munitions Systems and Equipment 74
4.6. Safety Certification of Munitions Systems. 74
4.6. (ACC) Safety Certification of Munitions Systems. 74
4.7. Risk Assessments for Explosives Equipment. 74
Section 4C—Explosives Operations and Facilities 74
4.8. Risk Assessment for Explosives Operations. 74
4.9. Risk Assessments for Explosives Facilities. 75
Section 4D—Glass Breakage Risk Assessments 75
4.10. Purpose of Glass Breakage Risk Assessments. 75
4.11. Requirements for Performance of Glass Breakage Risk Assessments. 75
4.12. Software Tools for Glass Breakage Risk Assessments. 76
4.13. Methodology for Glass Breakage Risk Assessments. 77
4.14. Engineering Mitigation Actions for Reducing or Eliminating Glass Breakage Hazards to Personnel. 77
Section 4E—Health Hazard and Environmental Assessments 78
4.15. Health Hazard Assessments. 78
4.16. Environmental Assessments. 78
Section 4F—Protection Principles 78
4.17. Protective Shielding and Remotely Controlled Operations. 78
4.18. Intentional Ignition or Initiation of AE. 79
4.19. Protective Measures. 79
4.20. Emergency Operations. 80
Figure 4.1. Five Step Process for Risk Management 81
Chapter 5—GENERAL EXPLOSIVES FACILITY DESIGN, CONSTRUCTION AND MAINTENANCE, AND EQUIPMENT DESIGN, MAINTENANCE AND INSPECTION 82
Section 5A—Introduction 82
5.1. Applicability. 82

Section 5B—Glass Panels 82
5.2. Glass Panels in Facilities Exposed to Explosives Hazards. 82
Section 5C—Hazardous Locations 83
5.3. Hazardous Locations. 83
5.4. Electrical Equipment in Hazardous Locations. 83
5.5. Interior Surfaces in Class II Hazardous Locations. 84
5.6. Hardware in Hazardous Locations. 84
5.7. Static Electricity in Hazardous Locations. 84
5.8. Ventilation in Hazardous Locations. 84
Section 5D—Electric Supply Systems 85
5.9. Electric Supply Systems. 85
5.10. Backup Power. 85
Section 5E—Static Grounding and Bonding 85
5.11. Areas Requiring Static Grounding and Bonding Systems. 85
5.12. Static Grounding and Bonding Requirements. 86
5.13. Permanent Static Grounding Systems. 87
5.14. Temporary Static Grounding or Bonding Cables. 87
5.15. Static Grounding or Bonding Reels. 87
5.16. Belting. 88
Section 5F—Conductive Floors 88
5.17. Areas Requiring Conductive Floors. 88
5.18. Requirements for Conductive Floors. 88
5.19. Testing and Maintenance of Conductive Floors. 88
5.20. Testing and Maintenance of Conductive Footwear. 89
Section 5G—Installed Systems and Equipment Grounds 89
5.21. Installed Systems and Equipment Grounds. 89
Section 5H—Lightning Protection Systems 89
5.22. Facilities Requiring Lightning Protection Systems. 89
5.23. Lightning Protection System Design. 90
5.24. Lightning Protection System Inspection, Maintenance, Testing, and Training. 93
5.25. Lightning Protection System Exceptions. 93
Section 5I—General Design Considerations for Explosives Facilities 95

5.26. Blowout-type Construction. 95
5.27. Non-combustible Construction. 95
5.28. Underground Explosives Storage Facilities. 95
5.29. Outdoor Explosives Storage Sites. 95
5.30. Stairways. 96
5.31. Fixed Ladders. 96
5.32. Platforms, Runways, and Railings. 96
5.33. Passageways. 96
5.34. Walkways. 96
5.35. Roads. 96
5.36. Gates. 97
5.37. Drainage. 97
5.38. Drains and Sumps. 97
5.39. Tunnels. 98
5.40. Laundries. 98
5.41. Steam for Explosives Processing or Facility Heating. 98
5.42. Magazine Ventilation and Vermin-Resistance. 99

Section 5J—Emergency Exits for Explosives Buildings 99
5.43. General. 99
5.44. Building Exits. 99
5.45. Exit Doors. 100
5.46. Safety Chutes. 100

Section 5K—Explosive Dust Collection Systems 101
5.47. Vacuum Collection. 101
5.48. Location of Dry-Type Collection Chambers. 101
5.49. Location of Wet-Type Collection Chambers. 102
5.50. Design and Operation of Collection Systems. 102

Section 5L—Water Supply and Fire Suppression Systems for Explosives Facilities 103
5.51. Water Supply for Explosives Manufacturing Areas and Loading Plants. 103
5.52. Automatic Sprinkler Systems. 103
5.53. Deluge Systems. 103

Section 5M—Monitoring of Design and Construction of Explosives Facilities 104

5.54. Monitoring of Design of Explosives Facilities. 104
5.55. Monitoring of Construction of Explosives Facilities. 104
Section 5N—Maintenance and Repair of Explosives Facilities and Equipment 104
5.56. Removal of Explosives. 104
5.57. Requirements for Maintenance and Repair With Explosives Present. 105
5.58. Maintenance of Explosives Facilities. 105
5.59. Maintenance and Repair in Hazardous Locations. 106
5.60. Maintenance and Repair of Hazardous Location Equipment and Electrical Installations. 106
5.61. Maintenance and Repair of Electrical Equipment. 106
5.62. Post-Maintenance and Repair of Explosives Facilities and Equipment. 106
Table 5.1. Lightning Sideflash Policy for Nuclear Weapon Configurations 106
Chapter 6—PROTECTIVE CONSTRUCTION AND SPECIFIC EXPLOSIVES FACILITY DESIGNS 107
Section 6A—Introduction 107
6.1. General. 107
6.2. Above Ground Magazines. 107
6.3. Special Structures. 107
6.4. High Performance Magazines and Underground Explosives Facilities. 107
Section 6B—Protective Construction 107
6.5. Purpose of Protective Construction. 107
6.6. Requirements for Use of Protective Construction. 107
Section 6C—Earth-Covered Magazines 109
6.7. Earth-Covered Magazines. 109
6.8. Earth-Covered Magazine NEWQD Limits. 109
6.9. Earth-Covered Magazine Design Load Criteria. 110
6.10. Earth-Covered Magazine Earth Cover Criteria. 110
6.11. Earth-Covered Magazine Drawings. 111
Section 6D—Barricaded Open Storage Modules 111
6.12. Barricaded Open Storage Modules. 111
6.13. Barricaded Open Storage Modules NEWQD and AE Type Limits. 111
6.14. Barricaded Open Storage Module Design Criteria. 112

Section 6E—Barricades 113

6.15. Barricades. 113

6.16. Barricade Size and Orientation to Prevent Prompt Propagation Due to High-Velocity, Low-Angle Fragments. 113

6.17. Barricade Size and Orientation for Barricaded ILD Protection. 114

6.18. Barricade Size and Orientation for Protection Against Overpressure. 115

6.19. Barricade Construction Materials. 115

6.20. Barricade Designs. 115

6.21. Natural Barricades. 115

6.22. Inspection of Barricades. 115

Section 6F—Earth-Filled, Steel Bin-Type Barricades for Outside Storage 116

6.23. Earth-Filled, Steel Bin-Type Barricades for Outside Storage. 116

6.24. ARMCO, Inc. Revetment HD Limits. 116

6.25. Types of ARMCO, Inc. Revetments. 116

6.26. Requirements for ARMCO, Inc. Revetments. 116

6.27. ARMCO, Inc. Revetment Designs. 117

Section 6G—Substantial Dividing Walls and Blast Doors 117

6.28. Substantial Dividing Walls. 117

6.29. Blast Doors. 120

Section 6H—Multicube or Segregated Magazines 120

6.30. Multicube or Segregated Magazines. 120

Figure 6.1. Typical Eight-Cell Barricaded Open Storage Module. 121

Figure 6.2. Determination of Barricade Length and Height to Prevent Prompt Propagation Due to High-Velocity, Low-Angle Fragments. 122

Figure 6.3. Determination of Barricade Length and Height for Barricaded ILD Protection. 123

Table 6.1. HD 1. 123

Chapter 7—EXPLOSIVES OPERATIONS AND STORAGE 125

Section 7A—Introduction 125

7.1. Introduction. 125

Section 7B—Locally Written Instructions 125

7.2. Locally Written Instructions. 125

7.3. Contents of Locally Written Instructions. 126

Section 7C—General Requirements for Operations Involving Explosives 126
7.4. Personnel Qualifications. 126
7.4. (ACC) Personnel Qualifications. 126
7.5. Personnel Limits. 126
7.6. Explosives Limits. 127
7.7. Housekeeping. 127
7.8. Smoking. 128
7.9. Handling of Explosives. 129
7.10. Portable Equipment. 130
Section 7D—Static Grounding 130
7.11. Static Electricity. 130
7.12. Requirement for Static Grounding. 130
7.13. Static Grounding for Handling Unpackaged EEDs. 131
7.14. Static Grounding for Aircraft During Explosives Loading and Unloading. 131
7.15. Static Grounding Techniques. 132
7.16. Methods to Reduce the Hazards of Static Electricity. 133
Section 7E—Testing, Procedures Verification, Disassembling and Modifying Explosives Items 133
7.17. Requirements for Test, Disassembly, and Modification of Explosives Items. 133
7.18. Electrical Testing of Explosives Items. 134
7.19. Use of Live Explosives for Weapons System Testing. 135
Section 7F—Requirements for Specific Situations 135
7.20. Places of Public Assembly. 135
7.20. (ACC) Places of Public Assembly. 135
7.21. Static or Public Displays. 135
7.22. Fireworks Displays and Airshow Events. 136
7.23. Live-fire Demonstrations. 138
7.24. Hunting. 138
7.25. Training Involving Blank Ammunition. 139
7.26. Exercises and Training Involving Simulators and Smoke Producing Munitions. 139
7.27. Training and Exercises Involving Explosives. 141
7.28. Military Working Dog Explosives. 142
7.29. Repairing Containers. 142

7.30. Remotely Controlled Operations. 142
7.31. Flightline Munitions Holding Areas. 142
Section 7G—Operations in Explosives Storage Spaces 142
7.32. Operations in Explosives Storage Spaces Containing Explosives. 142
Section 7H—Procedures in the Event of Electrical Storms 143
7.33. Local Lightning Warning System. 143
7.34. Procedures in the Event of Lightning. 144
Section 7I—Explosives Storage Requirements 145
7.35. Selection of Explosives Storage Method. 145
7.36. Explosives Storage in Operating Locations. 145
7.36. (ACC) Explosives Storage in Operating Locations. 145
7.37. Explosives Storage Facility Maintenance. 146
7.38. Explosives Stocks Maintenance. 146
7.39. Marking of Explosives Stocks. 146
7.40. Munitions in Austere Areas. 146
7.41. Privately-owned Ammunition. 147
7.42. Government Arms and Ammunition. 147
7.42. (ACC) Government Arms and Ammunition. 147
Section 7J—Storage and Compatibility Principles 148
7.43. Storage and Compatibility Principles. 148
7.44. Found-on-Base AE. 148
7.45. Dangerously Unserviceable AE. 148
Section 7K—Mixed Compatibility Group Storage 149
7.46. Mixed Compatibility Group Storage. 149
Table 7.1. Storage Compatibility Mixing Chart. 149
Chapter 8—EXPLOSIVES TRANSPORTATION 152
Section 8A—Introduction 152
8.1. Introduction. 152
Section 8B—Explosives Transportation Standards 152
8.2. Federal Regulation. 152
8.3. DoD Directives. 152
8.4. Local Laws Regulating Transportation of Explosives and Dangerous Articles. ... 152

8.4. (ACC) Local Laws Regulating Transportation of Explosives and Dangerous Articles. 152

Section 8C—Hazard Classification for Explosives Transportation 153

8.5. Hazard Classification Requirements for Transportation. 153

8.6. Commercial Explosives Hazard Classification Requirements for Transportation. 153

8.7. Compatibility of Explosives During Transportation. 153

8.8. Compatibility of Explosives During Temporary Storage. 154

Section 8D—Packaging for Explosives Transportation 154

8.9. Packaging. 154

8.10. Shipment of Explosives Which Have Been Damaged or Failed To Function. 155

8.11. Transporting Dangerously Unserviceable Explosive Items for Disposal. 155

Section 8E—Explosives Movement Routes on Base 155

8.12. Explosives Movement Routes on Base. 155

8.12. (ACC) Explosives Movement Routes on Base. 155

Section 8F—Incoming and In-transit Explosives Shipments 155

8.13. Incoming Explosives Shipments. 155

8.14. In-transit Explosives Shipments/Secure Holding. 156

8.15. Inspection of Incoming Explosives Shipments. 156

8.16. Inspection of Outgoing Explosives Shipments. 156

8.17. Interchange Yards. 157

8.18. Holding Yards. 157

8.19. Classification Yards. 157

8.20. AE Transportation Mode Change Locations. 157

Section 8G—Transportation and Movement of Explosives by Motor Vehicle and Material Handling Equipment 158

8.21. General. 158

8.21. (ACC) General. 158

8.22. Transporting Explosives in Passenger Compartments. 158

8.23. Transporting Electro-Explosive Devices. 158

8.24. Transporting Aircraft Seats and Survival Kits. 159

8.25. Packaging. 159

8.26. Placarding. 159

8.27. Motor Vehicle Inspection. 159

8.28. Load Protection and Stability. 159
8.29. Loading and Unloading. 160
8.30. Vehicle Refueling. 161
8.31. Battery-Powered Materials Handling Equipment. 161
8.32. Gasoline or Diesel-Powered Materials Handling Equipment. 161
8.33. Liquefied Petroleum and Compressed Natural Gas Fueled Vehicles. 162
8.34. Exposed Explosives Precautions. 162
8.35. Storage of Powered Materials Handling Equipment. 162
8.36. Operating Powered Materials Handling Equipment Inside Structures. 163
8.37. Maintenance of Vehicles Carrying Explosives. 163

Section 8H—Transportation of Explosives by Rail 163
8.38. General. 163
8.39. Movement of Railcars Containing Explosives. 163
8.40. Spotting Railcars. 163
8.41. Switching Railcars. 164
8.42. Marking Railcars with Blue Flags or Signals. 164
8.43. Loading Railcars. 164
8.44. Loading and Bracing. 165
8.45. Placarding of Railcars. 165
8.46. Railcar Requirements. 165
8.47. Leaking Packages in Railcars. 165
8.48. Tools for Loading and Unloading Railcars. 166
8.49. Sealing Railcars. 166
8.50. Processing Incoming Loaded Railcars. 166
8.51. Rail Interchange Yards. 167
8.52. Rail Holding Yards. 167
8.53. Rail Classification Yards. 167
8.54. Trailers on Flat Cars or Piggyback Explosives Loading and Unloading. 167

Section 8I—Transportation of Explosives by Air and Water 168
8.55. Transportation of Explosives by Air. 168
8.56. Transportation of Explosives by Water. 168

Chapter 9—PROTECTION OF ELECTRO-EXPLOSIVE DEVICES FROM HAZARDS OF ELECTROMAGNETIC RADIATION TO ORDNANCE (HERO) 169

Section 9A—Hazards of Electromagnetic Radiation to Electro-Explosive Devices 169

9.1. Chapter Overview. 169

9.2. Conducted Electromagnetic Energy. 169

Section 9B—Definitions and Conversion Formulas 169

9.3. Antenna Gain (Gt). 169

9.4. EED Susceptibility Terms. 169

9.5. Effective Isotropic Radiated Power (EIRP). 170

9.6. Electromagnetic Environment (EME). 170

9.7. Far Field/Far Field Distance (Rff). 170

9.8. Frequency (f). 170

9.9. HERO Certification. 170

9.10. HERO Classifications. 171

9.11. Modern Mobile Emitters (MME). 171

9.12. Near Field. 171

9.13. Safe Separation Distance (SSD). 171

9.14. Traditional Fixed-Location Emitters (TFE). 172

9.15. Transmitted Power (Pt). 172

Section 9C—HERO Protection Overview 172

9.16. Radiated Electromagnetic Energy. 172

9.17. EMR Protection Information. 172

9.18. EMR Information Categories. 172

Figure 9.1. Categories of EMR Information involved in protecting EEDs. 173

9.19. Use of EMR Information. 173

Section 9D—Responsibilities for EMR Analyses 173

9.20. Base-level Safety Office. 173

9.21. Command-level Safety Office. 173

9.22. Communications Squadron and Installation Spectrum Manager (ISM). 174

9.23. Headquarters Air Force Safety Center/Weapons Division (AFSC/SEW). 174

9.24. Civil Engineering Office (CE). 174

9.25. Munitions Squadron/Flight. 174

Section 9E—Emitter Categories and Assumptions 175

9.26. Traditional Fixed-Location Emitter (TFE) Analysis. 175

9.27. Modern Mobile Emitter (MME) Analysis. 175

Section 9F—Methods for Protecting EEDs from EMR Hazards 176

9.28. TFE Safety Procedures for Conventional Weapons and Individual EEDs. 176

9.29. TFE Safety Procedures for Nuclear Weapons. 178

9.30. MME Safety Procedures and Considerations. 178

9.31. Maximum Power Density Criteria. 180

Section 9G—Assistance for EMR Analyses 180

9.32. Assistance Requests. 180

9.33. Software Tool. 181

Section 9H—Deviations to EMR Requirements 181

9.34. Deviations to EMR Requirements. 181

Table 9.1. Recommended Power Densities and SSDs for HERO SUSCEPTIBLE Munitions. 181

Table 9.2. Recommended EED Power Densities and SSDs for Nuclear Weapons. 184

Figure 9.2. Recommended SSD for HERO SUSCEPTIBLE Munitions; “Exposed” Configuration. 185

Figure 9.3. Example: Recommended SSD for HERO SUSCEPTIBLE Munitions; “Exposed” Configuration. 186

Figure 9.4. Recommended SSD for HERO SUSCEPTIBLE Munitions; “In Storage or Ground Transport in a Non-Metallic Container” Configuration. 187

Chapter 10—FIREFIGHTING, EMERGENCY PLANNING AND FIRE PREVENTION 188

Section 10A—Hazard Identification for Firefighting and Emergency Planning 188

10.1. Scope and Applicability. 188

10.2. Fire Divisions. 188

10.3. Fire Division Symbols. 188

10.4. Chemical Agent and Chemical Munition Hazard Symbols. 188

10.5. Obtaining Firefighting Symbol Decals. 190

Section 10B—Posting Firefighting Symbols 190

10.6. Purpose of Posting Firefighting Symbols. 190

10.7. Posting Requirements for Firefighting Symbols. 190

10.8. Exceptions to Posting Firefighting Symbols. 191

Section 10C—Firefighting Measures and Withdrawal Distances 191
10.9. Firefighting Measures. 191
10.10. Fire Withdrawal Distances. 192
10.11. Improvised Explosive Device Withdrawal Distances. 193
10.12. Withdrawal Distances for AE Not Involved in Fire. 193
Section 10D—Emergency Planning 193
10.13. Emergency Planning. 193
10.14. Fire Drills. 194
10.14. (ACC) Munitions Control will maintain at a minimum a record of the last two fire drills. 194
Section 10E—Fire Prevention 194
10.15. Heat-Producing Devices. 194
10.16. Vegetation Control. 194
10.17. Firebreaks. 195
10.18. Controlled Burning. 195
10.19. Flammable Liquids for Cleaning. 195
10.20. Paint and Other Flammable Materials. 195
10.21. Operating Support Equipment. 196
10.22. Stacking Combustible Material. 196
10.23. Fire Extinguishers. 196
10.24. Storing Water for Firefighting. 197
10.24. (ACC) The ACC Command Fire Protection Engineer (HQ ACC/A7XF) has jurisdiction. 197
Table 10.1. Fire Division Hazards and Actions. 197
Table 10.2. Compatibility Group and Chemical Hazard Symbols Required for Storage of Chemical Ammunition and Substances. 198
Table 10.3. Fire Withdrawal Distances for Non-essential Personnel. 1 198
Figure 10.1. Fire Division Symbols. 200
Figure 10.2. Chemical Hazard Symbols. 201
Figure 10.3. Supplemental Chemical Hazard Symbols. 202
Chapter 11—LICENSED EXPLOSIVES STORAGE LOCATIONS 203
Section 11A—Purpose and Limitations for Licensed Explosives Storage Locations 203
11.1. Purpose of Licensed Explosives Storage Locations. 203

11.2. General Limitations on AE in Licensed Explosives Storage Locations. 203
11.3. NEWQD Limitations on AE in Licensed Explosives Storage Locations. 203
Section 11B—Requirements for Licensed Explosives Storage Locations 204
11.4. General Requirements for Licensed Explosives Storage Locations. 204
11.5. Separation Requirements for Licensed Explosives Storage Locations. 204
Section 11C—Documentation for Licensed Explosives Storage Locations 205
11.6. AF Form 2047. 205
11.7. Instructions for Completing AF Form 2047. 205
11.8. Maintaining the AF Form 2047. 206
Section 11D—Operations Involving AE Stored in Licensed Explosives Storage Locations 207
11.9. Operations Involving AE Stored Licensed Explosives Storage Locations. 207
Section 11E—Requirements for Specific Licensed Explosives Storage Locations 207
11.10. Mobility Storage. 207
11.11. Training and Exercises. 207
11.12. Control Tower. 207
11.13. Aircrew Flight Equipment. 207
11.14. Riot Control Items. 208
11.15. Egress Systems Maintenance Shops. 208
11.16. Gun Systems and Maintenance Shops. 208
11.17. Incendiary Equipment and Document Destroyers. 209
11.18. Rod and Gun Clubs. 209
11.19. Retail Stores. 209
11.20. Hand Loading. 209
11.21. Force Support Squadron Activities (formerly MWR Activities). 211
11.22. Minuteman Handling Team Facility. 211
11.23. Research and Development Laboratories for Specific Experiments. 211
11.24. Base Defense Support Munitions for Dispersed Locations. 211
Section 11F—Items or Situations not Requiring a License 211
11.25. Items or Situations not Requiring a License. 211
Figure 11.1. AF Form 2047, Explosives Facility License. 212
Chapter 12—QUANTITY-DISTANCE CRITERIA 214
Section 12A—Introduction 214

12.1. Introduction. 214

Section 12B—Quantity-Distance Principles 214

12.2. General. 214

12.3. Types of Separations. 214

Section 12C—Determining Net Explosive Weight for Quantity-Distance 216

12.4. Determining NEWQD of AE Items. 216

12.5. Determining NEWQD of a PES. 216

12.6. Maximum NEWQD. 217

12.7. Determining NEWQD for Mixed HD. 217

Section 12D—Determining Distances Between PESs and ESs 218

12.8. General. 218

12.9. Measuring from a PES. 218

12.10. Measuring to an ES. 218

Section 12E—Quantity-Distance Application 219

12.11. Quantity-Distance K-Factors. 219

12.12. Paired Relationships. 219

12.13. QD Determination. 220

Section 12F—Allowable Exposures 221

12.14. General. 221

12.15. Allowable IBD Exposures. 221

12.16. Allowable PTRD Exposures. 224

12.17. Allowable Unbarricaded ILD Exposures. 227

12.18. Allowable Barricaded ILD Exposures. 229

12.19. Allowable IMD Exposures. 230

12.20. Other Allowable Exposures. 230

Section 12G—Hazard Zones for ECMs and HASs 231

12.21. Hazard Zones for ECMs and HASs. 231

Section 12H—HD 1. 232

12.22. HD 1.1 Hazardous Fragment Distances. 232

12.23. HD 1.1 IBD and PTRD. 233

12.24. HD 1.1 ILD. 236

12.25. HD 1.1 IMD. 236

Section 12I—HD 1.2 QD Criteria 237
12.26. HD 1.2.1 and 1.2.2 QD Criteria. 237
12.27. HD 1.2.3 QD Criteria. 238
Section 12J—HD 1.3 QD Criteria 239
12.28. HD 1.3 QD Criteria. 239
Section 12K—HD 1.4 QD Criteria 239
12.29. HD 1.4 QD Criteria. 239
Section 12L—HD 1.6 QD Criteria 239
12.30. HD 1.6 QD Criteria. 239
Section 12M—HD 6.1 Criteria 239
12.31. HD 6.1 Criteria. 239
Section 12N—Energetic Liquids QD Criteria 240
12.32. Scope and Application. 240
12.33. Concept. 240
12.34. Determination of Energetic Liquids Quantity. 240
12.35. Measurement of Separation Distances. 240
12.36. Hazard Classification of Energetic Liquids. 241
12.37. QD Standards. 244
12.38. Contaminated Energetic Liquids. 245
Section 12O—QD Criteria Specific Facilities and Systems 245
12.39. General Airfield Criteria. 245
12.40. Combat Aircraft Related Activities. 246
12.41. Explosives Cargo Aircraft Related Activities. 247
12.42. Munitions or Weapons Storage Area Related Activities. 247
12.43. Concurrent Servicing Operations. 248
12.44. Hot-Pit Refueling Operations. 248
12.45. End-of-Runway and Arm/De-arm Pads and Crew Shelters. 248
12.46. Aircraft NEWQD. 248
12.47. Explosives Aircraft Exempt from Siting as a PES. 248
12.48. Deleted. 249
12.49. Other Aircraft Configurations. 249
12.50. Reduced MCEs for F-15 and F-16 Aircraft with AIM Series Missiles. 249

12.51. Hardened Aircraft Shelters (HAS) and Associated AE Facilities. 249
12.52. Weapons Storage Vaults in Hardened Aircraft Shelters. 251
12.53. Revetments. 251
12.54. Aircraft Battle Damage Repair Sites. 252
12.55. Helicopter Landing Areas for AE Operations. 252
12.56. Defensive or Tactical Missile Batteries. 252
12.57. Tactical Missile Separations. 253
12.58. Inspection Stations for AE Conveyances. 255
12.59. Interchange Yards for AE Conveyances. 256
12.60. Holding Yards for AE Conveyances. 256
12.61. Classification Yards. 257
12.62. AE Transportation Mode Change Locations. 257
12.63. Suspect Vehicle Holding Areas. 257
12.64. Secure Holding Areas. 257
12.65. Detached Loading Docks. 258
12.66. Service Magazines for Operating Locations. 258
12.67. Non-Explosives Loaded Vehicle Parking Areas. 258
12.68. Inert Storage. 259
12.69. Protective Shielding and Remotely Controlled Operations. 260
12.70. Deleted. 260
12.71. Buffered Storage. 260
12.72. Angled Storage. 261
12.73. Areas for Burning AE. 261
12.74. Areas Used for Intentional Detonations. 262
12.75. EOD Operational Responses. 264
12.76. EOD Proficiency Training Ranges. 265
12.77. EOD Training at Off-Range Locations. 266
12.78. Static Test Firing Propellant Loaded Items. 267
12.79. Military Working Dog (MWD) Explosives Search Training. 268
12.80. Demilitarization Operations for Expended 50-Caliber and Smaller Cartridge Casings.. 268
12.81. POL and Other Hazardous Materials. 269
12.82. Storage Tanks for Water and Other Non-Hazardous materials 270

12.83. Underground Tanks or Pipelines for Water and Other Non-Hazardous Materials. 271
12.84. Utilities and Services. 271
12.85. LGM-30 (Minuteman). 272
12.86. LGM-118 (Peacekeeper). 273
12.87. Inter-DoD Component Support and Tactical Facilities. 273
12.88. Criteria for non-DoD Explosives Activities on DoD Installations. 273
Section 12P—-Space and Intercontinental Ballistic Missile Requirements 274
12.89. General Information. 274
12.90. Support Facilities. 274
12.91. Safety Control Area. 276
12.92. Simultaneous Operations. 276
12.93. Barricades. 276
12.94. Space Launch Complex. 276
12.95. Space Test Facilities. 276
12.96. Risk Management. 277
12.97. Space and Intercontinental Ballistic Missile Criteria. 279
Figure 12.1. Hazard Zones for ECMs. 283
Figure 12.2. ECM Orientation Effects on IMD. 285
Figure 12.2. ECM Orientation Effects on IMD (Continued). 285
Figure 12.3. Hazard Zones for HASs. 286
Figure 12.4. F-15 Aircraft QD Separation Distances for Selected AIM/AGM Series Missile Configurations. 287
Figure 12.5. F-16 Aircraft QD Separation Distances for Selected AIM/AGM Series Missile Configurations. 288
Figure 12.6. Reduced MCEs and QDs for F-15 Aircraft in the Open 1,2,3,4,5 289
Figure 12.7. Reduced MCEs and QDs for F-16 Aircraft in the Open 1,2,3,4,5 291
Figure 12.8. Fragment Zones for General Purpose Bombs. 292
Table 12.1. HD 1.1 QD Criteria Notes (12) (24) 295
Table 12.1. HD 1.1 QD Criteria Notes (12) (24) (continued) 295
Table 12.1. HD 1.1 QD Criteria Notes (12) (24) (continued) 295
Table 12.1. (ACC) HD 1. 298
Table 12.2. HD 1.2.1, 1.2.2, and 1.2.3 QD Criteria NOTES (1) (2) (3) 305
Table 12.2. HD 1.2.1, 1.2.2, and 1.2.3 QD Criteria NOTES (1) (2) (3) (continued) 305

Table 12.2. (ACC) HD 1. 309
Table 12.3. HD 1.3, 1.4 and 1.6 QD Criteria. NOTES (1) (10) (11) 315
Table 12.3. HD 1.3, 1.4 and 1.6 QD Criteria. NOTES (1) (10) (11) (continued) 315
Table 12.3. (ACC) HD 1. 318
Table 12.4. HD 1.1 Default Hazardous Fragment Distances (HFD) for IBD. 322
Table 12.5. HFD for Open Stacks of Selected HD 1.1 AE 323
Table 12.6. HD 1.1 IBD and PTRD. 324
Table 12.7. HD 1.1 ILD from an ECM. 327
Table 12.8. HD 1.1 ILD other than ECM. 328
Table 12.9. HD 1.2.1 QD in the Open. 329
Table 12.10. HDD for HD 1.2.1 Stored in Structures Which Can Contribute to the Debris Hazard. 330
Table 12.11. HD 1.2.2 QD. 5 331
Table 12.12. HD 1.3 QD. 6 333
Table 12.13. HD 1.4 QD. 1,8 334
Table 12.14. HD 1.6 QD. 1 336
Table 12.15. Hazard Classifications and Minimum QD for Energetic Liquids. 336
Table 12.16. Factors to Use When Converting Energetic Liquid Densities. 338
Table 12.17. Energetic Liquid Explosive Equivalents. 1,2, 3, 4, 5 339
Table 12.18. QD Criteria for OSHA/NFPA Class I – III Flammable and Combustible Energetic Liquids Storage in Detached Buildings or Tanks. 1,2 340
Table 12.19. QD Criteria for Energetic Liquid Oxidizer (excluding Liquid Oxygen) Storage in Detached Buildings or Tanks. 1, 2 342
Table 12.20. QD Criteria for Liquid Oxygen Storage in Detached Buildings or Tanks. 1, 2 343
Table 12.21. QD Criteria for Liquid Hydrogen and Bulk Quantities of Hydrazines 1 343
Table 12.22. HD 1.1 QD for Military Aircraft Parking Areas. 345
Table 12.23. HAS Separation Criteria to Prevent Simultaneous Detonation 1,2,3 346
Table 12.23A. HAS Separation Criteria to Prevent Simultaneous Detonation (continued) 1,2,3 . 347
Table 12.24. HAS Separation Criteria for Asset Preservation 1,2,3 348
Table 12.24A. HAS Separation Criteria for Asset Preservation (continued) 1,2,3 349
Table 12.25A. QD from a Third Generation HAS PES to an Unhardened ES. 1,2,3 350
Table 12.25B. QD from a First Generation HAS PES to an Unhardened ES. 1,2,3 350
Table 12.26A. Default Maximum Case Fragment Distances Versus Diameter for Intentional Detonations. 354

Table 12.26A. Default Maximum Case Fragment Distances Versus Diameter for Intentional Detonations (Continued). 354

Table 12.26A. Default Maximum Case Fragment Distances Versus Diameter for Intentional Detonations (Continued). 354

Table 12.26B. Default Maximum Case Fragment Distances Versus Net Explosive Weight for Intentional Detonations. 358

Table 12.26B. Default Maximum Case Fragment Distances Versus Net Explosive Weight for Intentional Detonations (Continued). 358

Table 12.26B. Default Maximum Case Fragment Distances Versus Net Explosive Weight for Intentional Detonations (Continued). 358

Table 12.27. Minuteman TNT Equivalencies. 359

Table 12.28. Peacekeeper TNT Equivalencies. 360

Table 12.29. Criteria for Non-DoD Explosives Activities on DoD Installations. 360

Table 12.30. QD for HD 1.1 AE For K = 1.1, 1.25, 2, 2.75, 4.5, and 5. 360

Table 12.31. QD for HD 1.1 AE For K = 6, 8, 9, 11, 18, 40. 361

Chapter 13—CONTINGENCIES, COMBAT OPERATIONS, MILITARY OPERATIONS 363

Section 13A—Introduction 363

13.1. Introduction. 363

13.2. Scope. 363

13.3. Contingencies, Combat Operations, MOOTW, and Associated Training. 363

13.4. Asset Preservation and Minimum Separation Distances. 363

Section 13B—Planning for Deployments 364

13.5. Planning for Deployments. 364

Section 13C—Risk Management 365

13.6. Risk Management. 365

Section 13D—Explosives Site Planning 365

13.7. Site Approval. 365

13.8. Site Approval and Documentation Requirements. 366

13.9. Explosives Site Plan Packages. 367

13.10. Approval Authority for Exceptions. 367

Section 13E—QD Criteria for Contingencies, Combat Operations, MOOTW and Associated Training 368

13.11. Basic Load Ammunition Holding Area (BLAHA). 368

13.12. Ports. 369

13.13. Field Storage and Handling Areas. 370
13.14. Forward Arming and Refueling Point (FARP). 371
13.15. Airfield Operations. 372
13.16. Static Missile Battery Separation. 372
13.17. Emergency Destruction. 373
13.18. Separation From Fuel. 373
Table 13.1. QD for BLAHA and BLSA. 373
Table 13.2. QD Requirements for Armored Vehicles. 1,2,3 375
Table 13.3. QD for Field Storage and Handling Areas. 1,2 376
Table 13.4. QD for Contingency, Combat, and MOOTW Airfields. 377

Chapter 14—EXPLOSIVES SITE PLANNING 378

Section 14A—Introduction 378
14.1. Purpose of Explosives Site Planning. 378
14.2. Responsibilities for Explosives Site Planning. 378
14.2. (ACC) Responsibilities for Explosives Site Planning. 378

Section 14B—Explosives Clear Zones 378
14.3. Explosives Clear Zones. 378
14.4. Monitoring of Explosives Clear Zones. 378
14.5. Mapping Requirements for Explosives Clear Zones. 378
14.6. Reduction or Re-designation of Explosives Clear Zones. 379

Section 14C—Explosives Site Plans 379
14.7. Explosives Site Plans. 379
14.8. Funding for Projects Requiring Explosives Site Plans. 379
14.8. (ACC) Funding for Projects Requiring Explosives Site Plans. 379
14.9. Situations Requiring Explosives Site Plans. 379
14.10. Situations Not Requiring Explosives Site Plans. 380
14.11. Facility Modifications or Change in Use. 380
14.12. Explosives Site Plan Development and Installation-level Coordination. 381
14.13. Explosives Site Plan Contents. 382
14.14. Explosives Site Plan Submission and MAJCOM and Air Force-level Coordination Process. 382
14.15. Explosives Site Plan Approval. 383
14.16. Maintenance of Approved Explosives Site Plans. 385

14.16. (ACC) Maintenance of Approved Explosives Site Plans. 385

Section 14D—Explosives Site Plan Requirements 385

14.17. Explosives Site Plans for Non-DoD Explosives Activities on Air Force Installations. 385

14.18. Siting a Non-Explosives Exposed Site. 385

14.19. Explosives Site Plans Involving Exceptions. 386

14.20. Tiered Explosives Site Plans. 386

14.21. Components of the Explosives Site Plan. 386

14.22. Transmittal Letter. 386

14.23. AF Form 943. 389

14.24. Site Location Map. 391

14.25. Construction Drawings and Structural Engineering Analyses. 392

14.26. Automated Explosives Site Planning. 393

Section 14E—Deleted 393

14.27. Alternative AF Form 943 Formats. 393

Figure 14.1. Evaluation Zone Examples. 394

Figure 14.2. Instructions for Filling out AF Form 943. 395

Figure 14.3. AF Form 943. 396

Figure 14.4. Sample Site Location Map. 401

CHAPTER 15—REAL PROPERTY KNOWN OR SUSPECTED TO CONTAIN MUNITIONS AND EXPLOSIVES OF CONCERN AND CHEMICAL AGENTS 402

Section 15A—Introduction 402

15.1. General. 402

Section 15B—Explosives Safety Standards for the Identification and Control of Areas Known or Suspected to Contain MEC or CA 403

15.2. Identification and Control. 403

Section 15C—Safety Aspects of Explosives and CA Response Actions 404

15.3. Response Actions 404

Section 15D—Special Considerations 407

15.4. General 407

Table 15.1. Hazardous Waste Control Limits (HWCL) 411

Table 15.2. Health-Based Environmental Screening Levels (HBESL) 412

Section 15E—Required Safety Submissions (ESS, CSS and Explosives or CWM Site Plans) 412
15.5. General. 413
15.5. (ACC) General. 413
Section 15F—Amendments and Corrections 423
15.6. General. 423
Section 15G—After Action Reports (AAR) 424
15.7. General 424
Section 15H—Transfer of Real Property Outside DoD Control 425
15.8. General. 425
Chapter 16—SPECIAL STORAGE PROCEDURES FOR WASTE MILITARY MUNITIONS 427
Section 16A—Scope and Applicability 427
16.1. Scope and Applicability. 427
Section 16B—General 427
16.2. General. 427
Section 16C—Waivers and Exemptions 428
16.3. Waivers and Exemptions. 428
Section 16D—Storage Requirements 428
16.4. Requirements for Storage of Waste Military Munitions Under CE. 428
Section 16E—Loss of CE 429
16.5. Loss of CE. 429
16.6. Other Storage Standards. 429
16.7. Un-Permitted and Uncontrolled Loss Reporting. 430
Section 16F—Closure of Facilities Storing Waste Munitions 430
16.8. Closure of Facilities Storing Waste Munitions Under CE. 430
16.9. Discontinuance of use for the Storage of Waste Munitions. 431
16.10. Closure of Facilities Storing Waste Military Munitions Under RCRA. 431
CHAPTER 17—UNEXPLODED ORDNANCE (UXO) 432
Section 17A—Introduction 432
17.1. This chapter establishes standards to protect personnel and property from explosive and chemical agent (CA) hazards associated with UXO or other

military munitions, to include discarded military munitions (DMM), that have experienced abnormal environments. 432

17.2. General 432

Section 17B—Disposition 433

17.3. Disposition of UXO and of Other Military Munitions Being Managed as UXO .. 433

Section 17C—Special Considerations 436

17.4. General 436

Section 17D—Access to UXO Areas 438

17.5. Access to Areas Known or Suspected to Contain UXO. 438

Section 17E—Identification and Control 440

17.6. To ensure explosives and CA safety risk is identified and controlled on real property currently or formerly under the jurisdiction, custody, or control of the USAF, Installation Commanders must create and maintain permanent records required by paragraph 15.2.2. 440

17.7. Minimum Separation Distance (MSD) for UXO 440

17.7. (ACC) Minimum Separation Distance (MSD) for UXO. 440

Section 17F—Other Considerations 441

17.8. General 441

Section 17G—Prescribed and Adopted Forms 442

17.9. Prescribed Forms. 442

17.10. Adopted Forms. 442

ATTACHMENT 1—GLOSSARY OF REFERENCES AND SUPPORTING INFORMATION 443

Attachment 1—(ACC) GLOSSARY OF REFERENCES AND SUPPORTING INFORMATION 487

Attachment 2—SAMPLE EXPLOSIVES SITE PLAN TRANSMITTAL LETTER. 488

Attachment 3—SAMPLE NARRATIVE FOR AIR FORCE QUANTITY-DISTANCE EXCEPTION REQUEST 490

Attachment 4—SELECTED SECRETARY OF THE AIR FORCE EXEMPTIONS 491

Attachment 5—QD GUIDANCE FOR ON-BASE ROADS 493

Attachment 6—ESP REVIEW ELEMENTS 495

Attachment 7—EXPLOSIVES SAFETY SUBMISSION (ESS) REVIEW ELEMENTS. 496

Attachment 8—NO DOD ACTION INDICATED (NDAI) EXPLOSIVES SAFETY SUBMISSION (ESS) REVIEW ELEMENTS 499

Chapter 1

INTRODUCTION AND EXCEPTION PROGRAM

Section 1A—Explosives Safety General Instructions

1.1. Purpose. The purpose of this Manual is to implement, according to AFPD 91-2, the Air Force Weapons Safety program to:

1.1. (ACC)Purpose. It is impossible to adequately cover every situation involving explosives, flammable, or toxic materials; therefore, the absence of safety guidance in this supplement or in referenced publications does not indicate that other safeguards do not exist. Commanders must always assess risk associated with explosives operations and provide appropriate protection for personnel and resources, on and off base, from the hazards of explosives, flammable, or toxic materials.

1.1.1. Provide the maximum possible protection to personnel and property, both inside and outside the installation, from the damaging effects of potential accidents involving ammunition and explosives (AE).

1.1.2. Expose the minimum number of people to the minimum amount of AE for the minimum amount of time consistent with safe and efficient operations. This maxim is known as the cardinal principle of explosives safety.

1.1.3. AE safety standards herein should be considered minimum standards. Greater protection should be provided when practicable.

1.1.4. Observe explosives safety practices during all operations that include the use of live explosives.

1.1.5. Comply with DoD and Air Force explosives safety and environmental standards.

1.2. Scope.

1.2.1. The provisions of this Manual apply:

1.2.1.1. Whenever any explosives, propellant, or similar Hazard Class 1 energetic materials or other ammunition items in Classes 2 through 9 (see paragraph 3.5.1.2) are present on Air Force-owned or -leased facilities (except as allowed in paragraph 1.2.1.3), or are in the custody and control of Air Force civilian or military personnel.

1.2.1.2. Whenever United States (US)-titled AE are in the custody of Air Force civilian or military personnel, or Air Force contractors (except as allowed in paragraph 1.2.1.3).

1.2.1.3. At Air Force-owned and contractor-operated facilities, as specified by contract. Explosives safety requirements and procedures for compliance with current DoD and AF guidance shall be clearly specified in the contract. The contracting officer provides appropriate portions of DoD 4145.26-M, *DoD Contractors Safety Manual for Ammunition and Explosives* to the contractor. Weapons safety personnel from the organization responsible for the contract will advise the contractor on DoD and Air Force explosives safety standards specified in the contract. In the event explosive safety requirements are not specified in a contract, apply the provisions of DoD 4145.26-M.

1.2.1.4. To US-titled AE in host nation facilities. When operating overseas, remain cognizant of host nation laws and applicable international agreements. Ensure host nation officials receive appropriate notification of explosives-related activities in accordance with applicable legal requirements. When DoD AE are located in overseas areas, comply with US ammunition and explosives safety standards except when compliance with more restrictive local standards is made mandatory by an appropriate international agreement. When such ammunition is not in US custody and under US control, comply with US standards to the extent consistent with agreements or arrangements with the host country concerned. If Air Force civilian or military personnel occupy leased bases within North Atlantic Treaty Organization (NATO) countries, also apply the safety distances in Allied Ammunition Storage and Transport Publication (AASTP) - 1, Document AC/258-D/455, *Manual of NATO Safety Principles for the Storage of Military Ammunition and Explosives* to exposures outside the base boundary and NATO criteria to host nation exposed sites (ES) within the base.

1.2.1.5. To Air Force personnel and facilities exposed by any other potential explosion site (PES), whether it be DoD, host nation, or commercial AE. US personnel and US-titled munitions must be accorded the quantity-distance (QD) separation standards required by the Air Force and by DoD, even at foreign locations. US units will document their adherence to these standards by showing that US ESs are located at the required separation distances from host nation PESs. US ESs will be sited according to Chapter 14, and host nation PESs identified on explosives site plans. The identification of host nation PESs does not constitute "siting" because the US does not authorize AE for host nation facilities not under US control. If a violation of Air Force or DoD QD criteria to US targets is possible based on this analysis, obtain a waiver or exemption as outlined in Section 1B. If correction of the problem is beyond US capabilities, notify the host nation commander by letter from the waiver or exemption approval level. Attach to this letter enough information to convey the location, nature and extent of the potential explosives hazards. While other countries are not obligated to follow US rules, it may be helpful to explain to host nations that US QD standards are enforced on US installations, and are based on testing, experience, and scientific analysis.

1.2.1.6. To the following, unless otherwise stated in this Manual:

1.2.1.6.1. **Day-to-day Operations.** Operations a unit conducts on a day-to-day basis, including exercises, training and evaluations.

1.2.1.6.2. **Contingency or War Plans.** Operations that a unit plans to conduct only during a contingency or combat scenario (see Chapter 13). These operations are defined by operational plans, and are only projections based on possible or likely scenarios. They include planned operations at collocated operating bases (COB).

1.2.1.6.3. **Contingencies, Combat Operations, Military Operations Other Than War (MOOTW), and Associated Training.** Operations that a unit actually conducts during or leading up to a contingency, combat, or MOOTW situation. These operations may actually occur as previously defined by the operational plan, may be modified from the operational plan, or may be newly defined if an operational plan did not exist prior to the contingency, combat, or MOOTW situation. Associated training immediately supports an impending or on-going contingency, combat, or

MOOTW situation. Routine training falls under day-to-day operations per paragraph 1.2.1.6.1.

1.2.1.7. To Air Force contract personnel (except as allowed in paragraph 1.2.1.3) exposed to AE on Air Force installations. Such personnel may be afforded the same level of protection that would be similarly provided to Air Force civilian and military personnel. The installation weapons safety office will notify the contracting officer, in writing, of explosives hazards to Air Force contract personnel.

1.2.1.8. To the siting and construction of Air Force facilities (except as allowed in paragraph 1.2.2).

1.2.2. Continue to use existing facilities which do not comply with these standards only when current hazards are not greater than those assumed for their original use, and only provided installations can clearly demonstrate that redesign or modification is not feasible, and that the quantity of explosives, propellants, or chemical agents cannot be reduced for reasons of operational necessity.

1.2.2.1. To invoke this grandfathering clause for continued use of such facilities, have the following on file at the installation:

1.2.2.1.1. Date of construction, original purpose and quantity of explosives approved.

1.2.2.1.2. Explosives safety criteria in effect at the time of construction.

1.2.2.1.3. An explanation why redesign or modification is not feasible.

1.2.2.1.4. An explanation why quantities cannot be reduced below existing levels.

1.2.2.1.5. An explanation why current explosives safety criteria cannot be applied to the facility.

1.2.2.1.6. A statement that risks are not greater than those assumed for the original siting.

1.2.2.1.7. Written approval from the installation commander and the major command's Chief of Safety (MAJCOM/SE) when initially invoking grandfather clause.

1.2.2.2. The installation Weapons Safety Manager (WSM) will review the information required in paragraph 1.2.2.1 at least every five years to see if mission changes will allow the facility to be brought into compliance with current standards. If compliance with current standards is not possible and the facility is still being used for its original purpose and in accordance with its original criteria, then continue to maintain the documentation that was generated at the onset. Documentation of the periodic review must be kept on file at the installation.

1.2.2.3. Resiting such facilities requires compliance with these standards unless guidance of paragraph 1.2.2. is met or an exception is obtained in accordance with Section 1B.

1.2.3. Evaluate non-DoD explosives siting submissions on DoD installations only to ensure compliance with DoD explosives safety standards to non-commercial (DoD and public) exposures (see paragraph 12.88).

1.2.4. Site plans approved by MAJCOM prior to 31 December 1999 are no longer valid and must be submitted for Air Force and DoD approval.

Section 1B—Exception Program

1.3. General.

1.3.1. The AE safety standards herein are designed to manage the risks associated with AE by providing protection against serious injury, loss of life, and damage to property but are not intended to be so rigid as to prevent the Air Force from accomplishing its assigned missions. Consequently, when exceptions from these standards are made, proper authority within the Air Force must accept the added risk to personnel and property against the strategic or other compelling reasons that necessitate such exceptions. Added risk to personnel and property must be analyzed and documented to include methods used to reduce the risk to a level acceptable to the Air Force approval authority.

1.3.2. Ease of operation or convenience are not reasons for requesting an exception.

1.3.3. This section implements AFI 90-901, *Risk Management*, by providing a mechanism for units to assess the level of risk involved with QD exceptions and by providing guidance on the appropriate approval level for each exception. Make this determination after a complete analysis of the mission, explosives requirements, and facilities.

1.3.4. Out of Continental United States (OCONUS) Locations.

1.3.4.1. Host nation military and civilian personnel must be provided the same level of protection as US personnel. Host nation commanders must be notified when QD exceptions to Air Force standards place host nation personnel at additional risk. Also, where international treaties or Status of Forces Agreements require it, host nation approval must be obtained.

1.3.4.2. See paragraph 1.2.1.5 for additional guidance, when explosives content of host nations facilities may be hazarding Air Force facilities and personnel.

1.3.5. Exceptions need not be submitted when compensatory measures can be taken (e.g., temporarily reducing the authorized net explosive weight for quantity-distance (NEWQD) of a PES) that will avoid an exception. Document as prescribed in paragraphs 14.22.8 and 14.23.12.

1.3.6. Exceptions need not be submitted for situations that, upon analysis by Headquarters Air Force Safety Center/Weapons Safety Division (AFSC/SEW) and the DoD Explosives Safety Board (DDESB), are determined to provide the required degree of safety through use of protective construction or other specialized safety features.

1.3.7. MAJCOM/Weapons Safety (SEW) and the host base weapons safety offices must maintain copies of current waivers, exemptions, deviations, and compensatory measures for day-to-day operations as well as contingency and war plans.

1.3.7. **(ACC)** All explosives site plans (ESP) with exceptions and/or compensatory actions will be cataloged in an easily reviewable product (e.g., spreadsheet, database). Deviations approved outside of the ESP process will be maintained along with other exceptions and

compensatory actions. Forward products to HQ ACC Weapons Safety Branch (ACC/SEW) by the end of each Fiscal Year (FY).

1.3.8. Day-to-day operations involving exceptions must not be allowed until the exceptions are approved by the required approval authority (see paragraph 13.10 for direction concerning contingencies, combat operations, MOOTW, and associated training).

1.3.9. Exception is the inclusive term for any departure from the requirements of this Manual. Exceptions are further divided into deviations, operational waivers, waivers, exemptions, and Secretary of the Air Force (SECAF) waivers and exemptions for new construction.

1.4. Deviations. A deviation is a written authority permitting exceptions from mandatory non-QD requirements of this Manual for strategic or other compelling reasons. Generally, Chapters 12 and 13 of this Manual contain QD requirements and all other chapters contain non-QD requirements. This paragraph applies to deviations for day-to-day operations as well as contingency and war plans. Deviations for contingencies, combat operations, MOOTW, and associated training will be in accordance with paragraph 13.10.

1.4.1. Deviations from paragraph 5.23.4 "Sideflash Protection for Nuclear Weapons" or paragraph 9.30 "MME Safety Procedures/Considerations," and any/all of their subparagraphs, must be formally approved by AFSC/SEW.

1.4.1. **(ACC)** Air Force Safety Center Weapons Safety Division (AFSC/SEW) level deviations will be endorsed by the wing commander prior to being forwarded through command channels.

1.4.1.1. Deviation requests shall be documented as required in paragraph 1.4.3 below, with the following changes:

1.4.1.1.1. For deviations from paragraph 5.23.4, there is an additional requirement for a detailed description of compensatory measures which have been developed and are in place. The description shall include the reduced value of side flash separation distance which will be observed.

1.4.1.1.2. For deviations from paragraph 5.23.4, modify the requirement for a risk assessment (paragraph 1.4.3.3) to include only a review of the trade-offs between any expected additional risk from the decreased side flash separation distance and any expected increased safety due to the compensatory measures. The requirements necessary to complete this assessment shall be developed in coordination with AFSC/SEW on a case-by-case basis.

1.4.1.1.3. For deviations from paragraph 9.31, modify the requirement for a risk assessment (paragraph 1.4.3.3) to include only a detailed technical evaluation of the electromagnetic hazards and electro-explosive device (EED) sensitivities involved, and a description of the operational need for the deviation.

1.4.1.1.4. For deviations from either paragraph, there is an additional requirement for a signed statement with the authority to accept any increased risk and acknowledge responsibility for any consequences resulting from performing operations under this deviation.

1.4.1.2. AFSC/SEW will forward copies of all approved deviations to MAJCOM/SEW.

1.4.1.3. MAJCOMs determine the criteria to identify, track and review base level deviations.

1.4.1.3. **(ACC)** Maintain all deviations in accordance with (IAW) para **1.3.7** of this supplement. Review deviations IAW para 1.4.4. of AFMAN 91-201.

1.4.2. MAJCOMs determine approval levels for all other deviations for day-to-day operations and contingency or war plans. MAJCOMs will document required approval levels.

1.4.2. **(ACC)** The wing commander is the approval authority. Coordinate deviations with effected tenant or host organizations. Forward copy of approved deviations through command channels to HQ ACC/SEW for information and tracking.

1.4.3. Deviations shall be documented using a memorandum format, and shall include the following information:

1.4.3.1. Requirement of this Manual (cite specific reference) that is being excepted.

1.4.3.2. Strategic or other compelling reasons for requesting the deviation.

1.4.3.3. Risk assessment in accordance with Chapter 4.

1.4.3.4. Evaluation of feasible corrective actions and justification why none can currently be implemented (e.g. cost, mission impact).

1.4.3.5. Corrective action or actions which will be pursued to ultimately correct the deviation. Several corrective actions, any one of which may correct the deviation, may be pursued at the same time. For each corrective action being pursued provide associated cost estimate and schedule for completion.

1.4.3.6. If no corrective actions are feasible to ultimately correct the deviation, so state and provide justification.

1.4.3.7. Expiration date, if appropriate.

1.4.4. Deviations will be reviewed every three years. See paragraph 1.13 for review process requirements.

1.5. Operational Waivers. An operational waiver is written authority permitting a temporary exception from mandatory requirements of this Manual for strategic or other compelling reasons when conditions or circumstances causing the waiver arise unexpectedly and there is not enough time to comply with the formal waiver submission procedures. Additionally, an operational waiver may be implemented when initiation of explosives operations or events are required for strategic or other compelling reasons prior to receipt of final DDESB approval according to paragraph 14.15.1.1. This paragraph applies to operational waivers for day-to-day operations. Operational waivers for OCONUS contingencies, combat operations, MOOTW, and associated training will be in accordance with paragraph 13.10.

1.5.1. If the operational waiver cannot be corrected within 180 days, submit a formal waiver or exemption.

1.5.2. Operational waivers must not be used as a replacement for proper planning when formal explosives site planning approval can be obtained prior to the start of operations.

1.5.3. The responsible commander must approve the operational waiver in writing prior to onset of operations, or as soon as possible thereafter, for the length of the operational requirement but not to exceed 180 days. If the Air Force unit is a tenant on a non-United States Air Force installation, process according to governing directives.

1.5.4. Operational waivers shall be documented using a memorandum format and shall include, as applicable, the following information:

1.5.4.1. Type and NEWQD of munitions involved.

1.5.4.2. Type of ES. If people are present, give an estimate of the number of civilians and military.

1.5.4.3. Strategic or other compelling reasons for approving the exception.

1.5.4.4. Distance required versus distance available and QD standard not met.

1.5.4.5. Narrative explanation outlining the reason or reasons why the explosive standards could not be met and a discussion of reasonable alternatives considered and rejected.

1.5.4.6. Risk assessment in accordance with Chapter 4.

1.5.4.7. Waiver or exemption decision nomograph for each excepted PES to ES pair (see paragraph 1.12).

1.5.4.8. Expected duration of the operational waiver.

1.5.4.9. Point of Contact (POC) name, grade, phone, and e-mail.

1.5.5. Units will submit a copy of the approved operational waiver to MAJCOM/SEW. MAJCOM/SEW will then forward to AFSC/SEW, which may be included as part of the formal explosives site planning submission process.

1.5.5. **(ACC)** In addition fax or e-mail a copy to the appropriate NAF weapon safety office.

1.6. Waivers. A waiver is a written authority permitting a temporary exception, for existing construction, from a mandatory QD requirement of this Manual for strategic or other compelling reasons. Generally, waivers are granted for a short period (5 years or less) pending cancellation or correction of the waived conditions. Waivers will not be granted for periods exceeding 5 years. This paragraph applies to waivers for day-to-day operations as well as contingency and war plans. Waivers for contingencies, combat operations, MOOTW, and associated training will be in accordance with paragraph 13.10.

1.6.1. Waiver approval level for day-to-day operations as well as contingency and war plans will be based on the level of risk assumed by the specific hazard. The approval level is determined by application of the nomograph per paragraph 1.12.

1.6.2. Comply with the information requirements listed in paragraph 1.10 (paragraph 1.11 for HAF-level waivers).

1.6.3. Forward waivers for day-to-day operations, contingency plans and war plans as part of the explosives site plan package. Submit through command channels to AFSC/SEW. Each level of review will scrutinize the package for validity. Return packages failing to meet the

test of strategic or other compelling need, or packages omitting information requirements listed in paragraph 1.10 (or paragraph 1.11 for HAF-level waivers).

1.6.4. Waivers will be reviewed annually on the anniversary of their approval date. See paragraph 1.13 for review process requirements.

1.7. Exemptions. An exemption is a written authority permitting a long-term (more than 5 years) exception, for existing construction, from a mandatory QD requirement of this Manual for strategic or other compelling reasons. This paragraph applies to exemptions for day-to-day operations, contingency plans and war plans. Exemptions for contingencies, combat operations, MOOTW, associated training will be in accordance with paragraph 13.10.

1.7.1. Exemption approval level for day-to-day operations, contingency plans and war plans will be based on the level of risk assumed by the specific hazard. The approval level is determined by application of the nomograph per paragraph 1.12.

1.7.2. Comply with the information requirements listed in paragraph 1.10 (paragraph 1.11 for HAF-level exemptions).

1.7.3. Forward exemptions for day-to-day operations, contingency plans and war plans as part of the explosives site plan package. Submit through command channels to AFSC/SEW. Each level of review will scrutinize the package for validity. Return packages failing to meet the test of strategic or other compelling need, or packages omitting information requirements listed in paragraph 1.10 (or paragraph 1.11 for HAF-level exemptions).

1.7.4. Exemptions will be reviewed every 5 years on the anniversary of the approval date. Reviews may be accomplished early to spread out workloads. See paragraph 1.13 for review process requirements.

1.8. SECAF Waivers and Exemptions for New Construction. SECAF waivers and exemptions are written authorities that permit an exception, for new PES or ES construction, from a mandatory QD requirement of this Manual for strategic or other compelling reasons. This paragraph applies to SECAF waivers and exemptions for new construction in support of day-to-day operations, contingency plans and war plans. Waivers and exemptions for new construction in support of contingencies, combat operations, MOOTW, associated training will be in accordance with paragraph 13.10.

1.8.1. All planned construction in support of day-to-day operations as well as contingency and war plans which do not meet QD standards must be approved by SECAF.

1.8.2. An action which places an existing facility constructed within the past three years at less than prescribed QD requires SECAF approval. AF/SE may deviate from this requirement on a case-by-case basis.

1.8.3. Comply with the information requirements listed in paragraph 1.11.

1.8.4. Forward SECAF waivers and exemptions for day-to-day operations, contingency plans and war plans as part of the explosives site plan package. Submit through command channels to AFSC/SEW. Each level of review will scrutinize the package for validity. Return packages failing to meet the test of strategic or other compelling need, or packages omitting information requirements listed in paragraph 1.11.

1.8.5. See paragraph 1.13 for review process requirements.

1.8.6. Temporary QD departures to workers performing construction will be assessed and approved in accordance with paragraph 1.12.

1.9. Exceptions for Non-DoD Explosives Activities on Air Force Installations. Non-DoD explosives activities that are non-compliant with the explosives safety standards in this Manual, but which do not hazard DoD activities or violate QD criteria to DoD activities, will not be processed as exceptions. Instead, explosives site plan packages involving such non-compliant, non-DoD explosives activities will:

1.9.1. Clearly specify situations where non-compliance with explosives safety requirements exists.

1.9.2. Include a risk acknowledgement letter signed by the non-DoD user.

1.9.3. Include installation's weapons safety office recommendation for explosives site plan approval or disapproval with supporting rationale and installation commander coordination.

1.9.4. Coordinate with the non-DoD user prior to higher headquarters submission of the explosives site plan.

1.10. Waiver and Exemption Information Requirements. Preparation of waivers and exemptions is a team effort involving installation safety, civil engineering, legal, and other agencies affected by the waiver or exemption. Involve all supporting and affected agencies to ensure thorough evaluation of the proposed waiver or exemption.

1.10.1. Identify waivers and exemptions for each individual PES to ES relationship not meeting the QD requirements of this Manual.

1.10.2. For each excepted PES to ES pair, submit the following information in the explosives site plan package (Attachment 3 contains a sample narrative of a Q-D exception request):

1.10.2.1. Waiver or exemption number.

1.10.2.2. Requirement from this Manual (cite specific reference) that is being excepted.

1.10.2.3. Strategic or other compelling reasons for requesting the waiver or exemption.

1.10.2.4. Risk assessment in accordance with Chapter 4.

1.10.2.5. Waiver or exemption decision nomograph (see paragraph 1.12).

1.10.2.6. Evaluation of feasible corrective actions and justification why none can currently be implemented (e.g. cost, mission impact).

1.10.2.7. Corrective action or actions which will be pursued to ultimately correct the waiver or exemption. Several corrective actions, any one of which may correct the waiver or exemption, may be pursued at the same time. For each corrective action being pursued provide associated cost estimate and schedule for completion. (Installation safety staff will keep copies of supporting documentation for corrective actions being pursued.)

1.10.2.8. If no corrective actions are feasible to ultimately correct the waiver or exemption, so state and provide justification.

1.10.2.9. Expiration date, if appropriate.

1.10.3. See paragraph 14.23.10 for identifying waivers and exemptions on the AF Form 943, *Explosives Site Plan.*

1.10.4. If the waiver or exemption decision nomograph (paragraph 1.12) requires Assistant Secretary of the Air Force, SAF/Installations, Environment and Logistics (SAF/IE) approval, comply with the information requirements in paragraph 1.11.

1.11. HAF-Level Waiver and Exemption Information Requirements. This paragraph applies to all waivers and exemptions requiring SECAF or SAF/IE approval. To expedite processing of explosives site plans (ESP) with waivers or exemptions through Air Staff and Secretariat offices, a standardized format is essential. Units or MAJCOMs seeking HAF-level approval for waivers and exemptions will submit all required information electronically. Provide all ESP information required in Chapter 14, even though it may not all be included in the package forwarded to HAF-level. Assemble HAF-level request packages using the following format:

1.11.1. **Tab 1. MAJCOM/CC or CV Memorandum.** Use the transmittal letter in Attachment 2 as a format for this memorandum.

1.11.2. **Tab 2. Maps.** Provide the map for the explosives site plan according to paragraph 14.24. Additionally, submit a map which clearly shows the specific waivers and exemptions requiring HAF-level approval. Use separate colors to differentiate between HAF-level waivers and exemptions and those approved at subordinate levels of command. Where existing explosive clear zones are changing, show both the old and new.

1.11.3. **Tab 3. AF Form 943.** Clearly show which siting pairs are without exceptions, which exceptions require HAF-level approval, and which have received approval at subordinate levels of command. See **paragraph 14.23** for specific guidance and Figure 14.3 as an example.

1.11.4. **Tab 4. The Specific Standard Not Met.** Identify and cite the specific reference in this Manual requiring the exemption or waiver. Provide sufficient information to explain the nature of the exemption or waiver. Use highlighted excerpts from this Manual to explain the type of separation required (e.g., inhabited building or public traffic route distances) and the distance required or how the distance is calculated (e.g., QD distance criteria table, fragment distance criteria, etc.).

1.11.5. **Tab 5. Justification.** In narrative form, provide a detailed explanation of the "strategic or other compelling" reason for requesting the HAF-level waiver or exemption. Use specific references to aircraft sortie rates or other pertinent data to justify the type, quantity, and placement of explosives at the PES. Additionally, fully justify the position of the excepted ES. Provide any additional information, such as higher headquarters inspection findings or limiting factors (LIMFAC) which substantiate the request. Identify all feasible corrective actions and justify why none can currently be implemented (e.g. cost, mission impact).

1.11.6. **Tab 6. Risk Assessment.** Provide a risk assessment in accordance with Chapter 4. Provide a separate waiver or exemption decision nomograph (paragraph 1.12) for each excepted PES to ES pair requiring HAF-level approval.

1.11.7. **Tab 7. Corrective Actions.** Discuss any and all actions taken or planned to mitigate the effects of an explosives mishap. Consider such things as building techniques, barricading, glass protection, tiered siting, or planned construction. Identify the specific corrective action or actions which will be pursued to ultimately correct the waiver or exemption. Several corrective actions, any one of which may correct the waiver or exemption, may be pursued at the same time. For each corrective action being pursued provide associated cost estimate and schedule for completion. (Installation safety staff will keep copies of supporting documentation for corrective actions being pursued.) If no corrective actions are feasible to ultimately correct the waiver or exemption, so state and provide justification.

1.11.8. **Tab 8. Options.** Discuss fully all reasonable options considered by the unit but rejected in favor of the proposed action. Give details as to why each of the other options was not chosen. Discuss limitations to funding, real estate, or other constraints, as appropriate.

1.12. Waiver or Exemption Decision Nomograph. The waiver or exemption decision nomograph is a tool to assess risk, and determine the appropriate authority level for acceptance of that risk, for exceptions from mandatory QD requirements of this Manual.

1.12.1. Use the applicable nomograph based on the following situations:

1.12.1.1. For exceptions in day-to-day operations use Figure 1.1.

1.12.1.2. For exceptions in contingency and war plans use Figure 1.2. For combined day-to-day operations, and contingency and war plan ESPs, use Figure 1.1 for exceptions. However, if tiered siting is used, Figure 1.2 may be used for exceptions associated solely with the war plan operations tier.

1.12.1.3. Exceptions for contingencies, combat operations, MOOTW, and associated training are addressed in paragraph 13.10. Operations authorized by Homeland Defense directives will use Figure 1.1 within the Continental United States (CONUS), Alaska, Hawaii, U.S. possessions or territories.

1.12.2. **Risk-based approval levels range from SAF/IE down to Numbered Air Force (NAF) commander level.** As specified in Figure 1.1, NAF commanders may delegate approval authority for the lowest levels of risk to wing commander or equivalent. This delegation must be in writing. Where NAFs do not exist, MAJCOMs will identify an alternate intermediate command level between wing and MAJCOM; if there is no intermediate command level, MAJCOM approval will be required in place of NAF.

1.12.3. **Override Authority.** USAF/SE may elevate any QD exception for day-to-day operations, contingency plans or war plans to the Air Force Chief of Staff for final approval or for information purposes.

1.12.4. The nomograph is a two-step process. First, conduct a risk assessment to categorize the level of risk. Then plot the criteria on the nomograph and determine the approval level.

1.12.4.1. Risk Assessment. Risk levels are calculated based on three criteria:

1.12.4.1.1. **Likelihood.** The likelihood of a mishap is the relative probability an explosives mishap will occur based on the type of explosives involved, the level of activity at the PES, and external threats to the location. Each excepted PES will be categorized according to one of the five likelihood levels identified in Table

1.1. Contact AFSC/SEW when Table 1.1 fails to describe explosive operations or locations adequately.

1.12.4.1.2. **Exposure.** Exposure is the amount of time personnel and resources at an ES are exposed to a PES. It is expressed as man-hours per year. Use Table 1.2 to categorize each excepted ES.

1.12.4.1.3. **Consequences.** The possible consequences of an explosives mishap are based on the worst-case type and amount of explosives present, the construction of both the PES and ES, and the distance between the PES and ES. Use information in Chapter 4 to estimate the potential damage and injuries from a mishap explosion. Consequences will be categorized based on their effect on personnel, mission capability, and other resources according to Table 1.3.

1.12.4.2. **Plotting the Nomograph.** Each exception pair will have three data points as defined in paragraph 1.12.4.1. Plot each data point on the applicable nomograph. Draw a straight line from the Likelihood point, through the Exposure point, to the Pivot Line. From this point on the Pivot Line, draw a straight line through the Possible Consequences point, to the Approval Level line. Figure 1.3 is an example of a nomograph plot.

1.13. Periodic Reviews for Exceptions.

1.13. (ACC)Periodic Reviews for Exceptions. Compensatory actions will be reviewed every three years. Follow the procedures in para 1.13.1. of AFMAN 91-201 for reviews.

1.13.1. Periodic reviews of exceptions shall be documented, and include the following:

1.13.1.1. Confirmation of the continued existence of the exception.

1.13.1.2. Verification of the accuracy of the previous data associated with the exception.

1.13.1.3. Validation of the strategic or other compelling reasons for initial approval of the exception.

1.13.1.4. Validation that mitigating actions and stipulations are still in force.

1.13.1.5. Reassessment of proposed corrective actions. Identify any changes to proposed corrective actions and the reasons for those changes.

1.13.1.6. Current cost estimates for proposed corrective actions.

1.13.1.7. Status of progress towards accomplishing corrective actions and eliminating the exception.

1.13.1.8. Estimated date and schedule for completion of corrective actions.

1.13.2. Submit copies of periodic review documentation through command channels to AFSC/SEW.

1.13.3. Use the periodic review documentation to advocate funding, and other support required, for corrective action implementation.

1.13.4. Approval Levels for Reviews.

1.13.4.1. Reviews of deviations from paragraph 5.23.4 “Side Flash Protection for Nuclear Weapons” or paragraph 9.30 “MME Safety Procedures and Considerations,” and any or all of its subparagraphs, must be formally approved by AFSC/SEW.

1.13.4.2. MAJCOMs determine approval levels for periodic review of all other deviations. MAJCOMs will document required review approval levels.

1.13.4.2. **(ACC)** Base level deviation reviews will be conducted by the weapon safety manager (WSM) and approved by the wing commander.

1.13.4.3. For non-HAF-level waivers or exemptions approved prior to the waiver/exemption decision nomograph (paragraph 1.12) methodology, use the nomograph to determine the approval level.

1.13.4.4. For non-HAF-level waivers/exemptions approved using the waiver or exemption decision nomograph, the waiver or exemption will be reviewed at the original approval level. However, if PES to ES data has changed, reapply the nomograph to determine the approval level.

1.13.4.5. For waivers where the required time for completion of corrective actions to eliminate the waiver has exceeded 5 years, the waiver shall be reissued by the next higher approval level (unless the waiver was last approved at SAF/IE).

1.13.4.6. For HAF-level waivers and exemptions, see Table 1.4 to determine review approval level.

1.14. Cancellation of Waivers and Exemptions. Units will notify MAJCOM’s who will in turn notify AFSC/SEW of waivers and exceptions no longer needed according to procedures outlined in MAJCOM supplements.

1.14. (ACC)Cancellation of Waivers and Exemptions. Submit request in memorandum format signed by the chief of safety (COS) to cancel exceptions. Explain the original departure from standards and the action taken to eliminate the violation.

Table 1.1. Likelihood of a Mishap.

Category / Likelihood	Storage	Maintenance Inspection, Assembly, Disassembly	Operations	Transportation	Destruction	Testing
Possible. Over a typical career, a mishap can be expected to occur on an intermittent basis within the USAF		Dangerously unserviceable items awaiting destruction				Initial tests of new systems
Seldom. Over a typical career, a mishap can be expected to occur randomly within the USAF.	Any operating stocks in an area subject to hostile action such as rockets, missiles, air attacks, or terrorists.	Any operating location in an area subject to hostile actions such as rockets, missiles, air attacks, or terrorists.	Any explosives operations in an area subject to hostile actions such as rockets, missile, air attacks, or terrorists.			
	Dangerously unserviceable items awaiting destruction.	Hazardous environments with gases, fibers, etc.				
Unlikely. Over a typical career, a mishap can be expected to occur infrequently within the USAF.		Unserviceable (but not dangerous) items.	TDY operations during exercises, contingencies, or alert.		Burning, detonation, and static firing areas.	
		Circuit checks.	Hot Cargo Missions of unserviceable or unpackaged material.			
		TDY during contingencies or exercises				
Improbable. Over a typical career, a mishap will rarely occur within the USAF.	Operating stocks in storage requiring handling more than once each month.	Home station during contingencies or exercises.	Home station activities during exercises, contingencies or alert.	Railheads requiring application of QD.		Testing operational systems.
	Unserviceable (but not dangerous) items in storage.	Pyrotechnics	TDY operations during peacetime.			
		Functional tests not placing voltage across firing circuits.	Flightline holding areas/ready service storage locations outside munitions storage areas			
		Outdoor operations during inclement weather.	Deployed ground-based missile meant to be employed in a non- mobile mission for offensive or defensive purposes.			
Practically Impossible. So rare, a mishap is not expected to occur during a typical career.	Serviceable items in extended storage requiring handling less than once each month.	Paint and packing.	Home station flightline explosive activities during peacetime.			
		Operations involving no exposed explosives.	ICBM Launch Facilities.			
			Hot Cargo Missions of serviceable packaged material.			

Table 1.2. Exposure.

CATEGORY	LIMITS	EXAMPLE
Rare	≤ 48 man-hours per year	3 people @ 2 workdays per year OR 1 person @ 6 workdays per year
Unusual	≤ 288 man-hours per year	3 people @ 1 workday per month OR 36 people @ 1 workday per year
Occasional	≤ 1248 man-hours per year	3 people @ 1 workday per week OR 1 person @ 3 workdays per week
Frequent	≤ 10,440 man-hours per year	10 people @ 4 hours per day OR 260 people @ 5 days per year
Continuous	≥ 10,441 man-hours per year	10 people @ 8 hours per day OR 260 people @ 10 days per year

Table 1.3. Possible Consequences of a Mishap.

RESOURCE	CATASTROPHIC	CRITICAL	MARGINAL	NEGLIGIBLE
Buildings	- Separation is ≤IMD - Unstrengthened buildings will suffer severe structural damage approaching total destruction - Mission curtailed - Costs equal to or greater than $1,000,000 loss	- Separation is > IMD or equal to ILD - Unstrengthened buildings will suffer at least 50 percent damage and could approach total destruction - Mission interrupted - $200,000 but less than $1,000,000 loss	- Separation is > ILD or equal to incremental PTR - Unstrengthened building loss expected to equal at least 20 and as much as 50 percent - Mission degraded - $10,000 but less than $200,000 loss	- Separation is ≥ full PTR but < IBD separation - Unstrengthened building loss expected to equal approximately 5 -10 percent of the replacement costs - Mission unaffected - Must be less than $10,000 loss
Personnel (Unrelated)	- Separation is IMD or less - ≤ K11; ≥ 8 psi overpressure - Personnel are likely to be seriously injured due to blast, fragments, debris, and translation (i.e., being struck against hard objects). - A 20 percent or better chance of eardrum rupture	- Separation is ILD or less - ≤ K18; ≥ 3.5 psi overpressure - A 2-15 percent chance of eardrum damage - Personnel may suffer serious injuries from fragments, debris, firebrands, or other objects.	- Separation is greater than ILD or equal to incremental PTR - Occupants of exposed, unstrengthened structures may be injured by blast effects, building debris and displacement or suffer temporary hearing loss.	- At least full PTR but less than IBD - Occupants of exposed, unstrengthened structures may be injured by secondary blast effects, such as falling building debris - Personnel in the open are not expected to be killed or seriously injured by blast effects but, fragments and debris may cause some injuries.
Personnel (Related)	- Separation is barricaded ILD or less - ≤ K9; ≥ 12 psi overpressure - Personnel will be subjected to serious injury or death from direct blast, building collapse, or translation (i.e., being struck against hard objects).	- Separation is IMD or less - ≤ K11; ≥ 8 psi overpressure - Personnel are likely to be seriously injured due to blast, fragments, debris, and translation (i.e., being struck against hard objects). - A 20 percent or better chance of eardrum rupture	- Separation is less than ILD - < K18; >3.5 psi overpressure - A 2-15 percent chance of eardrum damage - Personnel may suffer serious injuries from fragments, debris, firebrands, or other objects.	- Separation is ≥ to ILD but < IBD - > K18; ≤3.5 psi overpressure - A 2 percent chance of eardrum damage - Personnel may suffer injuries from fragments, debris, firebrands, or other objects.
Vehicles (Unrelated)	- < K9, >12PSI - Barricaded Aboveground Magazine Distance - K6, ≥ 27 PSI -- Vehicles will be overturned and crushed by the blast. .- Costs equal to or greater than $1,000,000 loss	- Separation is barricaded ILD but < ILD - K9, 12 PSI; < K18, >3.5 PSI - Vehicles will be heavily damaged, probably to the extent of total loss or severely damaged with minor engine damage, and total glass breakage.	- Separation is ≥ ILD < incremental PTR - K18, 3.5 PSI; < K24, >2.3 PSI - Vehicles will incur extensive, but not severe, body and glass damage consisting mainly of body panel dishing, and cracks in shatter resistant windows.	- Separation is ≥ incremental PTR but < full PTR - K24-K30; 2.3-1.7 PSI - Vehicles should suffer little damage, unless they are hit by a fragment or the blast causes a momentary loss of control. - Must be less than $10,000

		- $200,000 but less than $1,000,000 loss	- $10,000 but less than $200,000 loss	loss
Aircraft	**PARKED AIRCRAFT** - <K18, >3.5 PSI thru K11, 8 PSI -- Aircraft will be damaged heavily by blast and fragments; destruction by resulting fire is likely. - Barricaded ILD; K9, 12 PSI -- Aircraft will be damaged beyond economical repair both by blast and fragments. - Barricaded AGM; K6, 27 PSI -- Aircraft will be destroyed by blast, thermal, and debris effects. - Mission curtailed - Costs equal to or greater than $1,000,000 loss	**AIRCRAFT IN FLIGHT** - K30, 1.7 PSI -- Aircraft that are landing or taking off may lose control and crash. **PARKED AIRCRAFT** - <K24, >2.3 PSI thru K18, 3.5 PSI -- Aircraft are expected to suffer considerable structural damage from blast. -- Fragments and debris are likely to cause severe damage - Mission interrupted - $200,000 but less than $1,000,000 loss	**PARKED AIRCRAFT** - <K30, >1.7 PSI thru K24, 2.3 PSI -- Aircraft may suffer some damage to the fuselage from blast and possible fragment penetration, but should be operational with minor repair - Mission degraded - $10,000 but less than $200,000 loss	**PARKED AIRCRAFT** - ≥K30, ≤1.7 PSI -- Parked military and commercial aircraft will likely sustain minor damage due to blast, but should remain airworthy. - Mission unaffected - Must be less than $10,000 loss

Table 1.4. Periodic Review Levels for HAF-Level Waivers and Exemptions.

IF	AND	THEN
HAF-approved waiver or exemption for new construction	Periodic review within 3 years of construction shows increased risk (through application of nomograph)	HAF-approval of review required; USAF/SE may deviate from this requirement on a case-by-case basis
HAF-approved waiver or exemption for new construction	Periodic review within 3 years of construction shows same or decreased risk (through application of nomograph)	Apply nomograph to determine review approval level
HAF-approved waiver or exemption for new construction	Periodic review more than 3 years after construction	Apply nomograph to determine review approval level
HAF-approved waiver or exemption not involving new construction, approved prior to use of nomograph	Periodic review	Apply nomograph to determine review approval level
HAF-approved waiver or exemption not involving new construction, HAF-approval driven by application of the nomograph	Periodic review	Apply nomograph to determine review approval level

Figure 1.1. Exception Decision Nomograph–Day-to-Day Operations.

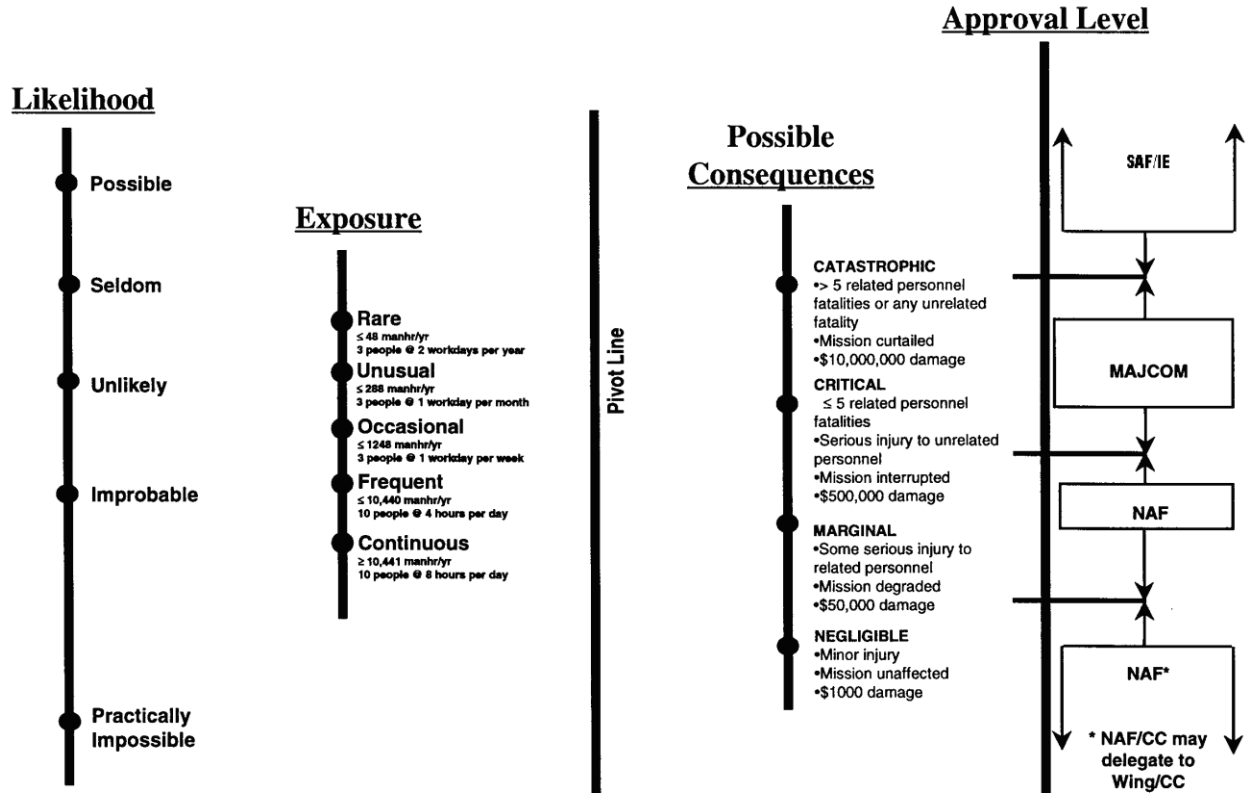

Title: _____Exception Type:_____

Figure 1.2. Exception Decision Nomograph–Contingency and War Plans.

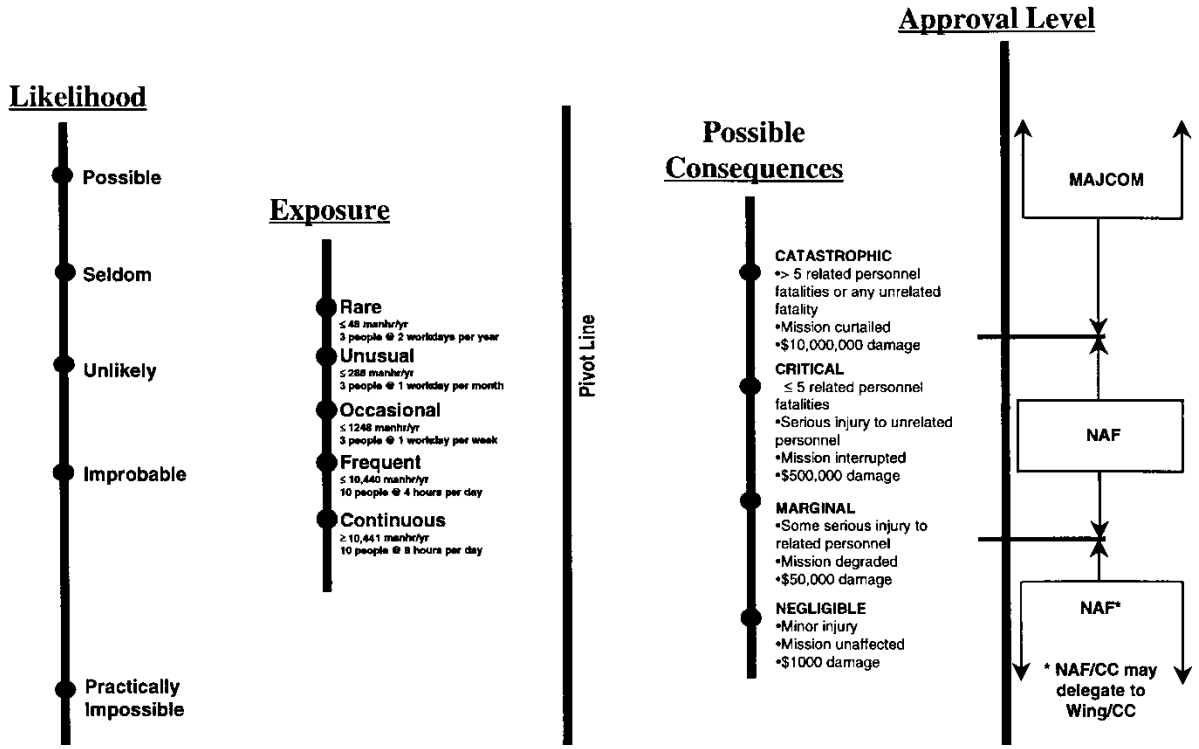

Title: _____Exception Type:_____

Figure 1.3. Nomograph Plotting Example.

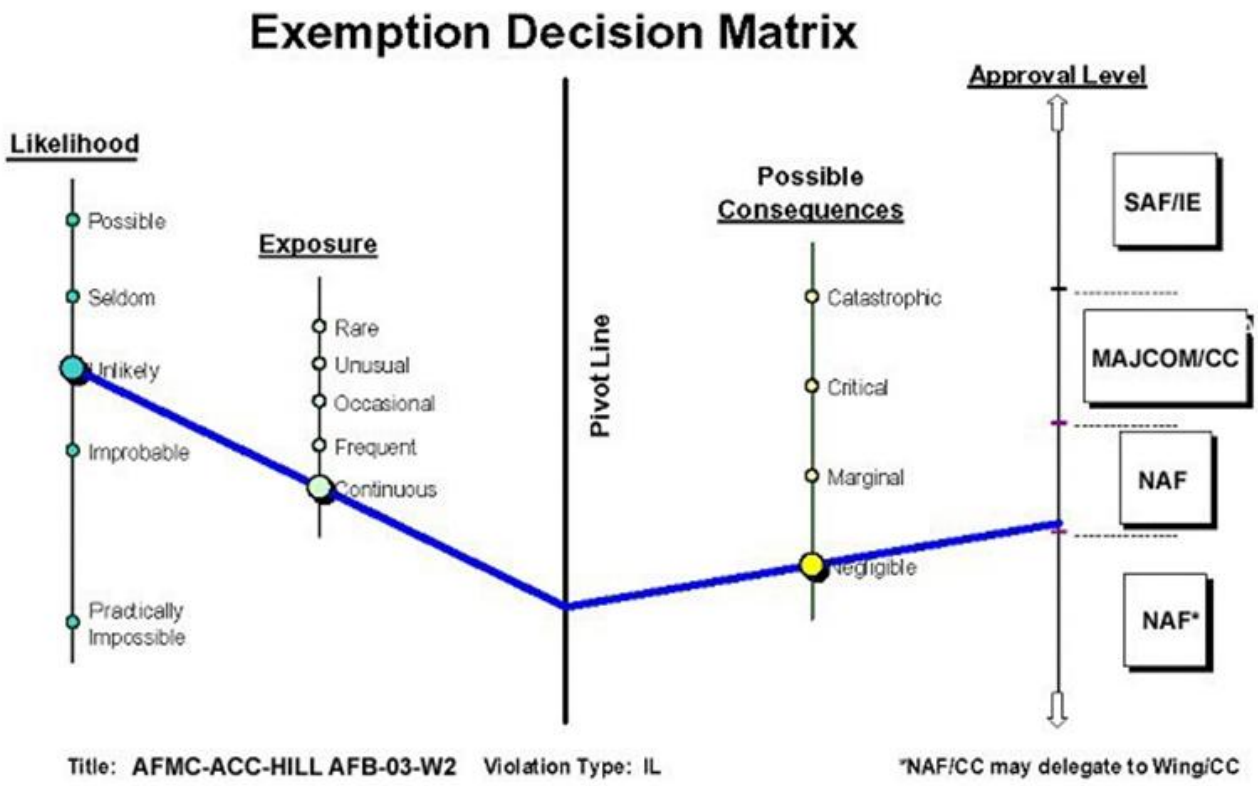

Step #1 – Plot the three criteria appropriately on the nomograph.
Step #2 – Draw a line from the LIKELIHOOD plot, through the EXPOSURE plot to the PIVOT LINE.
Step #3 – From the point on the PIVOT LINE, draw a second line through the CONSEQUENCE plot to the APPROVAL LEVEL line.

Chapter 2

REACTION EFFECTS

Section 2A—Principal Effects of High Density (HD) 1.1 Events

2.1. Blast.

2.1.1. **Blast Wave Phenomena.** In an incident involving HD 1.1, or HD 1.1 with any other HD (a HD 1.1 event), the violent release of energy creates a sudden and intense pressure disturbance termed the "blast wave." The blast wave is characterized by an almost instantaneous rise from ambient pressure to a peak incident pressure (P_i). This pressure increase, or "shock front," travels radially outward from the detonation point, with a diminishing velocity that is always in excess of the speed of sound in that medium. Gas molecules making up the front move at lower velocities. This velocity, which is called the "particle velocity," is associated with the "dynamic pressure," or the pressure formed by the winds produced by the shock front.

2.1.1.1. As the shock front expands into increasingly larger volumes of the medium, the incident pressure decreases and, generally, the duration of the pressure-pulse increases.

2.1.1.2. If the shock wave impinges a rigid surface (e.g., a building) at an angle to the direction of the wave's propagation, a reflected pressure is instantly developed on the surface and this pressure rises to a value that exceeds the incident pressure. This reflected pressure is a function of the incident wave's pressure and the angle formed between the rigid surface and the plane of the shock front.

2.1.2. **Partially Confined Explosions.** When an explosion occurs within a structure, the peak pressure associated with the initial shock front will both be high and amplified by reflections within the structure. In addition, the accumulation of gases from the explosion will exert additional pressure and increase the load duration within the structure. This effect may damage or destroy the structure unless the structure is designed to either withstand or vent the gas and shock pressures. Structures that have one or more strengthened walls may be vented for relief of excessive gas by either frangible construction of the remaining walls or roof or through the use of openings. This type of construction will permit the gas from an internal explosion to spill out of the structure. Once released from confinement, these pressures (referred to as "exterior" or "leakage" pressures) expand radially and may affect external structures or personnel.

2.1.3. **QD K-factors.** Throughout this Manual, NEWQD is used to calculate QD separations for blast protection by means of a formula using a "K-factor." See paragraph 12.11. for explanation of this formula.

2.1.4. Expected Blast Pressures at QD Table 2.1 presents the incident pressures that would be expected at various K-factors from HD 1.1 events. Use of the Incident Airblast Calculator and the Blast Effects Calculator (BEC) may also be used.

2.1.5. **General Blast Effects On Structures.**

2.1.5.1. **Conventional Structures.** Conventional structures are generally designed to withstand roof-snow loads of 0-50 pounds per square foot or wind loads up to 90 miles per hour, or both. At 90 mph, the wind load equates to 0.14 psi. Given the pressures shown in Table 2.1 for the selected K-factors, it is evident that, even at inhabited building distance (IBD), conventional structures may not provide complete protection from blast. Generally, the weakest portions of any conventional structure are the windows. Table 2.2 provides the probability of breaking typical windows at various K-factors and associated incident pressures from HD 1.1 events.

2.1.5.2. **Above Ground Structures (AGS).** These are generally considered conventional structures and provide little protection from blast or fragmentation. (See **paragraph 2.5**.)

2.1.5.3. **Earth-Covered Magazine (ECM).** An explosion at an ECM produces high reflected pressure and impulse. These can damage doors and headwalls of adjacent ECMs, propelling debris onto contents and communicating the explosion. When separated from each other by the minimum distances required by Table 12.1, ECMs (see Section 6C) provide AE with virtually complete protection against propagation. However, AE in adjacent ECMs may be damaged and structural damage ranging from cracks in concrete, damage to ventilators and doors to complete structural failure may occur in the corresponding ECM. (***NOTE:***When ECMs containing HD 1.1 AE are sited so that if any one is in the forward sector of another, the two must be separated by distances greater than the minimum permitted for side-to-side orientations. The greater distances are required to protect the door and headwall of a facing ECM from the adjacent explosion; to a lesser extent, they are required as protection from the directional effects of the source.)

2.1.5.4. **Underground Storage Facilities.** Underground facilities sited per DoD 6055.09-M, Volume 5, *DoD Ammunition and Explosives Safety Standards* provide a high degree of protection against propagation of an explosion between chambers, and between underground and aboveground structures. An HD 1.1 explosion in an underground storage facility causes very high pressures of prolonged duration. Blast waves and the accompanying gas flows will travel throughout the underground facility at high velocity.

2.1.5.5. **Barricaded Open-Storage Modules.** Barricaded open-storage modules (see Section 6D) provide a high degree of protection against the propagation of an explosion. However, if flammable materials are present in nearby cells, subsequent propagation by fire is possible. When an explosion occurs in adjacent modules separated by K1.1, AE will be thrown tens of meters and be covered with earth, thereby unavailable for use until extensive uncovering operations, and possibly maintenance, are completed. Items at K=2.5 separation distance from a donor explosion are expected to be readily accessible.

2.1.6. **General Blast Effects on Personnel.** Tables 2.3, 2.4 and 2.5 describe the expected effects of blast on personnel.

2.1.7. **Computation of Blast Effects.** Many of the blast effects described in this section were computed using the DDESB Blast Effects Computer (available at

http://www.ddesb.pentagon.mil) and proven test methodologies as outlined in Department of Defense Explosives Safety Board (DDESB) Technical Paper (TP) 16, Current revision, *Methodologies for Calculating Primary Fragment Characteristics*. The DDESB Blast Effects Computer can be used to estimate similar effects associated with various NEWQDs, facilities, and distances.

2.2. Fragments. General. An important consideration in the analysis of the hazards associated with an explosion is the effect of any fragments produced. Although most common in HD 1.1 or HD 1.2 (see Section 2B) events, fragmentation may occur in any incident involving AE. Depending on their origin, fragments are referred to as "primary" or "secondary" fragments.

2.2.1. Primary fragments result from the shattering of a container (e.g., shell casings, kettles, hoppers, and other containers used in the manufacture of explosives, rocket engine housings) in direct contact with the explosive. These fragments usually are small, initially travel at thousands of feet per second and may be lethal at long distances from an explosion.

2.2.2. Secondary fragments are debris from structures and other items in close proximity to the explosion. These fragments, which are somewhat larger in size than primary fragments and initially travel at hundreds of feet per second, do not normally travel as far as primary fragments.

2.2.3. The earth cover of an underground facility may rupture and create a significant debris hazard.

2.2.4. A hazardous fragment is one having an impact energy of 58 ft-lb or greater.

2.2.5. A hazardous fragment density is 1 hazardous fragment per 600 ft^2.

2.3. Thermal Hazards.

2.3.1. **General.** Generally, thermal hazards from a HD 1.1 event are less hazardous than blast and fragment hazards.

2.3.2. **Personnel.** It normally takes longer to incur injury from thermal effects than from either blast or fragmentation effects because both blast and fragmentation occur almost instantaneously. The time available to react to a thermal event increases survivability.

2.3.3. **Structures, Material, and AE.** The primary thermal effect on structures, material, and AE is their partial or total destruction by fire. The primary concern with a fire involving AE is that it may transition to a more severe reaction, such as a detonation.

2.4. Groundshock and Cratering.

2.4.1. **General.**

2.4.1.1. In an airburst, there may be a downward propagation of ground shock. Cratering may be reduced or eliminated.

2.4.1.2. In a surface burst, ground shock is generated and cratering can be significant.

2.4.1.3. A buried or partially buried detonation produces the strongest ground shock; however, if the explosion is deep enough, no crater will be formed.

2.4.2. **Underground Facilities.** AE protection can be achieved by proper chamber spacing. An HD 1.1 explosion will produce ground shocks that may rupture the earth cover and eject debris. (See DoD 6055.09-M.)

2.5. Expected Consequences.

2.5.1. Barricaded Aboveground Magazine Distance – K6 (27 psi). At this distance:

2.5.1.1. Unstrengthened buildings will be destroyed.

2.5.1.2. Personnel will be killed by blast, by being struck by debris, or by impact against hard surfaces.

2.5.1.3. Transport vehicles will be overturned and crushed by the blast.

2.5.1.4. Explosives-loaded vessels will be damaged severely, with propagation of explosion likely.

2.5.1.5. Aircraft will be destroyed by blast, thermal, and debris effects.

2.5.1.6. Barricades are an effective control measure for preventing immediate propagation of explosion by high velocity low angle fragments. However, they provide only limited protection against any delayed propagation of explosives caused by a fire resulting from high angle firebrands.

2.5.2. Barricaded Intraline Distance – K9 (12 psi). At this distance:

2.5.2.1. Unstrengthened buildings will suffer severe structural damage approaching total destruction.

2.5.2.2. Personnel will be subject to severe injuries or death from direct blast, building collapse, or translation.

2.5.2.3. Aircraft will be damaged beyond economical repair both by blast and fragments. (If the aircraft are loaded with explosives, delayed explosions are likely to result from subsequent fires.)

2.5.2.4. Transport vehicles will be damaged heavily, probably to the extent of total loss.

2.5.2.5. Improperly designed barricades or structures may increase the hazard from flying debris, or may collapse in such a manner as to increase the risk to personnel and equipment.

2.5.2.6. Barricading is a required control measure. Direct propagation of explosion between two explosive locations is unlikely when barricades are placed between them to intercept high velocity low angle fragments. Exposed structures containing high value, mission critical equipment or personnel may require hardening.

2.5.3. Unbarricaded Aboveground Magazine Distance – K11 (8 psi). At this distance:

2.5.3.1. Unstrengthened buildings will suffer damage approaching total destruction.

2.5.3.2. Personnel are likely to be injured seriously due to blast, fragments, debris, and translation.

2.5.3.3. There is a 15 percent risk of eardrum rupture.

2.5.3.4. Explosives-loaded vessels are likely to be damaged extensively and delayed propagation of explosion may occur.

2.5.3.5. Aircraft will be damaged heavily by blast and fragments; destruction by resulting fire is likely.

2.5.3.6. Transport vehicles will sustain severe body damage, minor engine damage, and total glass breakage.

2.5.3.7. As a control, barricading will significantly reduce the risk of propagation of explosion and injury of personnel by high velocity low angle fragments.

2.5.4. Unbarricaded Intraline Distance – K18 (3.5 psi). At this distance:

2.5.4.1. Direct propagation of explosion is not expected.

2.5.4.2. Delayed propagation of an explosion may occur at the ES, as either a direct result of a fire or as a result of equipment failure.

2.5.4.3. Damage to unstrengthened buildings may approximate 50 percent, or more, of the total replacement cost. Sensitive electronic equipment is expected to stop functioning.

2.5.4.4. There is a two percent chance of eardrum damage to personnel.

2.5.4.5. Personnel may suffer serious injuries from fragments, debris, firebrands, or other objects.

2.5.4.6. Fragments could damage the decks and superstructure of cargo ships and overpressure could buckle their doors and bulkheads on weather decks.

2.5.4.7. Aircraft can be expected to suffer considerable structural damage from blast. Fragments and debris are likely to cause severe damage to aircraft at K18 distances when small quantities of explosives are involved.

2.5.4.8. Transport vehicles will incur extensive, but not severe, body and glass damage consisting mainly of dishing of body panels and cracks in shatter-resistant window glass.

2.5.4.9. Suitably designed suppressive construction at PES or protective construction at ES may be practical controls for some situations. Such construction is encouraged when there is insufficient distance to provide the required protection.

2.5.5. Public Traffic Route Distance (PTRD) (under 100,000 lbs HE) – K24 (2.3 psi). At this distance:

2.5.5.1. Unstrengthened buildings can be expected to sustain damage approximately 20 percent of the replacement cost.

2.5.5.2. Occupants of exposed structures may suffer temporary hearing loss or injury from blast effects, building debris and displacement.

2.5.5.3. Although personnel in the open are not expected to be killed or seriously injured by blast effects, fragments and debris may cause some injuries. The extent of these injuries depends largely upon the PES structure and the amount and fragmentation characteristics of the AE involved.

2.5.5.4. Vehicles on the road should suffer little damage, unless they are hit by a fragment or the blast causes a momentary loss of control.

2.5.5.5. Aircraft may suffer some damage to the fuselage from blast and possible fragment penetration, but should be operational with minor repair.

2.5.5.6. Cargo-type ships should suffer minor damage to deck structure and exposed electronics from blast and possible fragment penetration, but such damage should be readily repairable.

2.5.5.7. Barricading is an effective control that can reduce the risk of injury or damage due to fragments for limited quantities of AE at a PES. When practical, suitably designed suppressive construction at the PES or protective construction at the ES may also provide some protection.

2.5.6. Public Traffic Route Distance (over 250,000 lbs HE) – K30 (1.7 psi). At this distance:

2.5.6.1. Unstrengthened buildings can be expected to sustain damage that may approximate 10 percent of their replacement cost.

2.5.6.2. Occupants of exposed, unstrengthened structures may be injured by secondary blast effects, such as falling building debris.

2.5.6.3. Pilots of aircraft that are landing or taking off may lose control and crash.

2.5.6.4. Parked military and commercial aircraft will likely sustain minor damage due to blast, but should remain airworthy.

2.5.6.5. Although personnel in the open are not expected to be killed or seriously injured by blast effects, fragments and debris may cause some injuries. The extent of these injuries will largely depend upon the PES structure, the NEWQD, and the fragmentation characteristics of the AE involved.

2.5.6.6. Barricading or the application of minimum fragmentation distance requirements are effective controls that may reduce the risk of injury or damage due to fragments for limited quantities of AE at a PES.

2.5.7. Inhabited Building Distance (IBD) – K40 to K50 (1.2 psi to 0.90 psi). At this distance:

2.5.7.1. Unstrengthened buildings can be expected to sustain damage that approximates five percent of their replacement cost.

2.5.7.2. Personnel in buildings are provided a high degree of protection from death or serious injury; however, glass breakage and building debris may still cause some injuries.

2.5.7.3. Personnel in the open are not expected to be injured seriously by blast effects. Fragments and debris may cause some injuries. The extent of injuries will depend upon the PES structure and the NEWQD and fragmentation characteristics of the AE involved.

2.5.7.4. Elimination of glass surfaces is the best control. If determined to be necessary, reducing the use of glass or the size of any glass surfaces and the use of blast resistant glass will provide some relief. For new construction, building design characteristics, to include consideration of how any required glass surfaces are

oriented and use of blast resistant glass, can reduce glass breakage and structural damage.

Section 2B—Principal Effects of HD 1.2 Events.

2.6. Blast.

2.6.1. HD 1.2, when not stored with HD 1.1 or HD 1.5, is not expected to mass detonate. In an incident involving HD 1.2, when stored by itself or with HD 1.3, HD 1.4, or HD 1.6 (a HD 1.2 event), AE can be expected to both explode sporadically and burn. Fire will propagate through the mass of the AE over time. Some AE may neither explode nor burn. Blast effects from the incident are limited to the immediate vicinity and are not considered to be a significant hazard.

2.6.2. A HD 1.2 event may occur over a prolonged period of time. Generally, the first reactions are relatively nonviolent and, typically, begin a few minutes after flames engulf the AE. Later reactions tend to be more violent. Reactions can continue for some time (hours), even after a fire is effectively out. Generally, smaller AE tends to react earlier in an incident than larger AE.

2.6.3. The results of an accidental explosion in an underground facility will depend on the type and quantity of munitions, the type of explosion produced, and the layout of the facility. Hazards created outside the underground facility will likely not be as severe as those produced by HD 1.1 or 1.3 material.

2.7. Fragments.

2.7.1. The primary hazard from a HD 1.2 event is fragmentation. Fragmentation may include primary fragments from AE casings or secondary fragments from containers and structures. At longer ranges, primary fragments are the major contributors to fragment hazards.

2.7.2. During a HD 1.2 event, fragmentation may extensively damage exposed facilities. However, less fragmentation damage can be expected from a given quantity of HD 1.2 than would be expected from the corresponding quantity of HD 1.1 because not all the HD 1.2 will react.

2.8. Thermal Hazards.

2.8.1. An incident involving a quantity of HD 1.2 poses considerably less thermal risk to personnel than an incident involving corresponding quantities of either HD 1.1 or HD 1.3 because a HD 1.2 event's progressive nature allows personnel to immediately evacuate the area.

2.8.2. A HD 1.2 event's progressive nature provides an opportunity for a fire suppression system, if installed, to put out a fire in its early stages.

2.9. Ejected Items. In HD 1.2 events, a reaction may eject (lob) unreacted-AE or AE components from the event site. These ejected items may subsequently react.

2.10. Propelled Items. In HD 1.2 events, some AE or AE components may become propulsive and travel well beyond IBD.

2.11. Firebrands. In an incident involving only HD 1.2 or HD 1.2 with HD 1.4, firebrands are considered to be a hazard only in the immediate vicinity of the incident site.

2.12. Expected Consequences.

2.12.1. The expected consequences for HD 1.2 AE are similar to those for HD 1.1. The effects of HD 1.2 AE are NEWQD dependent.

2.12.2. The principal hazard to personnel in the open, to aircraft, and to occupied vehicles is fragments.

2.12.3. Airblast, fragment, and thermal hazards to buildings and parked aircraft or vehicles cannot be predicted reliably because the effects will depend on the maximum credible event (MCE).

Section 2C—Principal Effects of HD 1.3 Events

2.13. Gas Pressures. In an incident involving only HD 1.3 or HD 1.3 with HD 1.4 (a HD 1.3 event):

2.13.1. Where sufficient venting is provided, gas pressures generated by the event are not a significant concern. Examples of sites with sufficient venting include open storage and structures where internal pressures do not exceed 1 to 2 psi (non-confinement structure).

2.13.2. Where venting is insufficient, internal gas pressures may be substantial. In such situations, these pressures may blow out vent panels or frangible walls and, in some instances, cause partial or complete structural failure.

2.13.3. Where there is minimal venting and structural containment (extreme confinement), a detonation of the HD 1.3 may occur with effects similar to those of a HD 1.1 explosion. For example, HD 1.3 AE is considered as HD 1.1 (mass explosion) for QD purposes when stored in underground chambers.

2.14. Fragments. In a HD 1.3 event, fragments are considerably less hazardous than those produced by HD 1.1 and HD 1.2 events. Internal gas pressures may produce fragments from the bursting of containers or the rupture of containment facilities. In general, such fragments will be large and of low velocity. (For exceptions, see **paragraph 2.13.3**.)

2.15. Thermal Hazards. In a HD 1.3 event, heat flux presents the greatest hazard to personnel and assets. HD 1.3 substances include both fuel components and oxidizers. Burning HD 1.3 emits fuel-rich flammable gases, fine particles, or both. This unburned material may ignite when it comes in contact with air and cause a large fireball. This fireball will expand radially from the ignition site and could wrap around obstacles, even those designed to provide line-of-sight protection from HD 1.1 events. Shields and walls can be designed to provide protection from thermal effects (see Chapter 4).

2.15.1. The nominal spherical fireball that would be expected from the rapid burning of HD 1.3 can be calculated by $D_{FIRE} = 10 \times W_{EFF}^{1/3}$ where D_{FIRE} is the diameter of the fireball (ft) and W_{EFF} is the quantity of HD 1.3 involved (lb), multiplied by a 20% safety factor (e.g., W of 100 pounds = W_{EFF} of 120 pounds).

2.15.2. In addition to the fireball itself, the thermal flux from the fireball can ignite fires out to intermagazine distance (IMD).

2.16. Propelled Items. In a HD 1.3 event, some AE or AE components may become propulsive and travel well beyond IBD.

2.17. Firebrands. In a HD 1.3 event, a severe fire-spread hazard may result from firebrands projected from the incident site. Firebrands can be expected to be thrown more than 50 ft from a HD 1.3 event. Firebrands can ignite fires well beyond the distance to which a fireball poses a threat.

2.18. Expected Consequences.

2.18.1. Exposed personnel may receive severe burns from fireballs or flash burning in a HD 1.3 event. The hazard distance is dependent on the quantity and burning rate of the HD 1.3 involved.

2.18.2. Buildings, vehicles, and aircraft may be ignited by radiant heat, sparks, or firebrands or may be damaged by heat (searing, buckling, etc.).

2.18.3. Personnel in nearby buildings, vehicles, or aircraft may be injured unless evacuated before heat conditions reach hazardous levels.

Section 2D—Principal Effects of HD 1.4 Events

2.19. Blast. There is no blast associated with an incident involving only HD 1.4 (a HD 1.4 event).

2.20. Fragments. A HD 1.4 event will not produce fragments of appreciable energy (i.e., greater than 14.8 ft-lbs). (Note: Fragments from HD 1.4S have energies less than or equal to 5.9 ft-lbs.)

2.21. Thermal Hazards. AE given this designation are considered to provide only a moderate fire hazard. A fireball or jet of flame may extend 3 feet beyond the location of the HD 1.4 event. A burning time of less than 330 seconds (5.5 minutes) for 220 lbs of the HD 1.4 AE is expected.

2.22. Firebrands. No fiery projections are expected beyond 50 feet.

2.23. Compatibility Group (CG) S Items. HD 1.4 AE assigned a CG S (see **paragraph 3.21.13**) designation is the most benign of all AE. In a HD 1.4 event that only involves CG S, the expected blast, thermal, and projection effects will not significantly hinder fire fighting or other emergency responses.

2.24. Expected Consequences. There may be minor consequences (projection, fire, smoke, heat, or loud noise) beyond the AE itself.

Section 2E—Principal Effects of HD 1.5 and HD 1.6 Events

2.25. HD 1.5 Effects. HD 1.5 effects are similar to those produced by HD 1.1, without the fragmentation effects.

2.26. HD 1.6 Effects. HD 1.6 effects are similar to those produced by HD 1.3.

Table 2.1. Expected Peak Incident Pressures From HD 1.1 Events.

K-FACTOR ($ft/lb^{1/3}$)	INCIDENT PRESSURE (psi)	K-FACTOR ($ft/lb^{1/3}$)	INCIDENT PRESSURE (psi)
1.0	1006	20	3.0
1.2	766	21	2.8
1.4	598	22	2.6
1.6	475	23	2.5
1.8	384	24	2.3
2.0	314	25	2.2
2.5	200	26	2.1
3.0	135	27	2.0
3.5	96	28	1.9
4.0	70	29	1.8
4.5	54	30	1.7
5.0	42	31	1.6
6	27	32	1.6
7	20	33	1.5
8	15	34	1.5
9	12	35	1.4
10	9.6	36	1.4
11	8.0	37	1.3
12	6.9	38	1.3
13	6.0	39	1.2
14	5.3	40	1.2
15	4.7	45	1.0
16	4.2	50	0.9
17	3.8	60	0.7
18	3.5	70	0.6
19	3.2	80	0.5

Table 2.2. Probability Of Window Breakage From Incident Pressure.

K-FACTOR ($ft/lb^{1/3}$)	INCIDENT PRESSURE (psi)	PROBABILITY OF BREAKAGE (%) FOR WINDOWS FACING PES		
		WINDOW 1	WINDOW 2	WINDOW 3
40	1.2	85	100	100
50	0.9	60	100	100
60	0.7	41	100	100
70	0.6	26	100	100
80	0.5	16	94	100
90	0.4	10	76	100
100	0.3	6	55	100
150	0.2	1	8	49
328	0.0655	0	0.1	0.8

NOTE:
Window 1: 12” x 24” x 0.088” Float annealed (area = 2 ft^2)
Window 2: 24” x 24” x 0.088” Float annealed (area = 4 ft^2)
Window 3: 42” x 36” x 0.120” Float annealed (area = 10.5 ft^2)

Table 2.3. General Blast Effects On Personnel–Eardrum Rupture.

EFFECT	Incident Pressure (psi)	K-FACTOR ($ft/lb^{1/3}$)	Probability Minor[1] (%)	Moderate[2] (%)	Major[3] (%)
Eardrum Damage	3.0	20.0	3.2	0.2	0
	3.6	17.9	7.3	0.7	0
	4.9	14.6	21.0	3.9	0
	6.6	12.2	41.3	12.8	0.2
	9.0	10.3	63.7	29.8	1.5
	15.0	8.0	88.8	65.0	15.1
	74.4	3.9	100	99.8	97.8

Notes for Table 2.3.

1. Minor rupture includes minor slits, and linear disruption of the drum fibers producing a mesh-like effect.
2. Moderate rupture consists of large tears, or multiple small holes or tears.
3. Major rupture is total disruption of the drum with large flaps of drum.

Table 2.4. General Blast Effects On Personnel–Lung Damage.

EFFECT	Incident Pressure (psi)	Pulse Duration (ms)
Threshold Lung Damage*	191.0	0.2
	87.6	0.5
	50.0	1
	32.5	2
	19.3	5
	14.4	10
	12.1	20
	10.9	50
	10.5	100

* Standing Person

Table 2.5. General Blast Effects On Personnel – Lethality Due To Lung Rupture.

EFFECT*	Probability (%)	Weight (lbs)	Range (ft)	K-FACTOR ($ft/lb^{1/3}$)	Incident Pressure (psi)	Pulse Duration (ms)	Positive Impulse (psi-ms)
Lethality due to Lung Rupture	1	8,000	95.0	4.75	47.2	31.3	317.5
		27,000	155.0	5.19	38.5	47.4	437.9
		125,000	277.6	5.55	33.0	80.9	685.2
	50	8,000	76.1	3.80	79.0	33.0	393.5
		27,000	128.4	4.28	60.1	47.8	526.7
		125,000	234.1	4.68	48.8	78.4	805.1
	99	8,000	57.7	2.89	146.8	32.6	493.4
		27,000	103.8	3.46	97.9	50.8	643.2
		125,000	195.8	3.92	73.8	81.8	956.5

* Lethality due to lung rupture is caused by a combination of pressure and impulse. This combination will vary with the charge weight.

Chapter 3

HAZARD CLASSIFICATION

Section 3A—DoD Hazard Classification System

3.1. Purpose of Hazard Classification. The DoD Hazard Classification System is designed to reflect the type and degree of hazard associated with an AE item. It is used to determine the degree of protection (such as distance separation) needed for various exposed locations and people, and to determine which items can be safely stored together. Each AE item is assigned a hazard classification based on the form in which it is normally available as well as its common packaging, storage and transportation (commercial or military) configurations.

3.2. Responsibility for Hazard Classification. Air Force organizations that develop or are the first to adopt AE items for use are responsible for obtaining DoD hazard classifications using the procedures in Technical Order (T.O.) 11A-1-47, *DoD Ammunition and Explosives Hazard Classification Procedures.* It is the program office's responsibility to ensure AE items are properly hazard classified before they enter Air Force installations.

3.3. Hazard Classification Authorities. The Air Force hazard classification authorities are AFSC/SEW, AAC/SES, and 784 CBSG. Army and Navy hazard classification authorities are listed in T.O. 11A-1-47.

3.4. Standards for Determining DoD Hazard Classification. Use the following resources to identify AE hazard characteristics for storage and transportation purposes:

3.4.1. T.O. 11A-1-47, as a basis for assigning hazard classifications to all AE for both storage and transportation applications.

3.4.2. The applicable Department of Transportation (DOT) hazardous materials regulations per 49 CFR 171 to 177.

3.4.3. The United Nations' (UN) international system of classification developed for the transport of dangerous goods, ST/SG/AC.10/1/latest revision, *Recommendations on the Transport of Dangerous Goods*.

3.5. Description of DoD Hazard Classification System. The DoD hazard classification system consists of nine hazard classes plus a Not-Regulated category, thirteen compatibility groups, five sensitivity groups, and a parenthetical number.

3.5.1. Hazard Classes.

3.5.1.1. **Class 1.** AE is assigned to the class that represents an item's predominant hazard characteristic. Class 1 applies to AE in which the explosive hazard predominates. The six Class 1 divisions used to indicate the character and predominance of explosive hazards. This Manual uses the term "Hazard Division (HD)" to avoid repeatedly using the more cumbersome terminology "Subdivision X of Division Y of Class Z." The Class 1 divisions and subdivisions are described in Section 3D. See Chapter 2 for detailed reaction effects of Class 1 AE.

3.5.1.2. **Classes 2 through 9.** The DoD inventory includes AE items assigned to Class 2 (compressed gas), Class 3 (flammable liquid), Class 4.1 (flammable solid), Class 5.1

(oxidizer), Class 6.1 (poisonous materials), and Class 8 (corrosive materials). Although these items contain a small amount of explosives, the predominant hazard is not an explosive reaction. They are assigned to Classes 2 through 9 based on the predominant hazard. The DoD hazard classification system classifies articles that contain riot control substances, without explosives components, and bulk toxic chemical agents as HD 6.1. Any item that contains explosives, but is not assigned to Class 1 due to its predominant hazard, is considered to have a net explosive weight of zero for QD determinations. Items that fall into this category do not contribute to the net explosive weight calculated for the storage site. Even though such items are assigned to another class, they will still have a DoD storage compatibility group designation, and may be combined in storage with compatible Class 1 items. When Classes 2 through 9 ammunition items are stored alone, they do not require siting or licensing, except as an exposed site.

3.5.1.3. **Not-Regulated Category.** This category applies when explosives and hazardous materials are present in an item, but not to the degree that criteria for assignment to one of the nine classes are met. Items that contain a hazardous material, but that have been designated Not-Regulated, do not require storage or handling as a hazardous material. The explosive weight of Not-Regulated items is not considered for QD purposes.

3.5.2. **Compatibility Groups.** Compatibility Groups (CG) are used for segregating AE on the basis of similarity of function, features, and accident effects potential. In developing the various compatibility groups, these factors are considered: chemical and physical properties, design characteristics, inner and outer packaging configurations, hazard class and division, NEWQD, rate of deterioration, sensitivity to initiation, and effects of deflagration, explosion, or detonation. The compatibility groups are described in Section 3E.

3.5.3. **Sensitivity Groups.** Sensitivity Groups (SG) are used for determining allowable net explosive weights where ARMCO Revetments or substantial dividing walls are used. The sensitivity groups are described in Section 3E.

3.5.4. **Parenthetical Number.** A parenthetical number is used to indicate the minimum separation distance (in hundreds of feet) for protection from debris, fragments, and firebrands when distance alone is relied on for such protection. This number is placed to the left of the hazard classification designators (e.g., (12)1.1, (08)1.2.3, or (02)1.3). It is assigned for all HD 1.2.3 items, and some HD 1.1 and 1.3 items.

3.6. Net Explosive Weight and Net Explosive Weight for Quantity-Distance. The Net Explosives Weight (NEW) listed in DoD Joint Hazard Classification System (JHCS) is the total weight of all explosive, propellant, and pyrotechnic material in a single article. The NEW is identified because transportation regulations require documentation of the NEW on shipping papers for transportation. However, the NEWQD is used for explosives siting. The NEWQD is equal to the NEW unless hazard classification testing has shown that a lower weight is appropriate for QD purposes. If the NEWQD is less than the NEW, the reason is usually that propellant or other substances do not contribute as much to the blast effect as the same amount of high explosives would.

3.7. Requirement for DoD Hazard Classification. Except as allowed in Section 3B, DoD hazard classifications are required as follows:

3.7.1. Interim hazard classification must be assigned to explosives items under development, test articles, components, and certain explosive commercial products having no final hazard classification if they are to be stored on DoD property or transported. DoD hazard classification authorities document the interim classification in letters. These letters must be included in storage and shipment documentation until the classification is finalized. The agency obtaining the interim hazard classification must renew it upon termination (as specified in the letter). This applies if the item is still in the inventory or until final hazard classification is determined. Interim DoD hazard classifications assigned by Army and Navy classification authorities are acceptable to the Air Force.

3.7.2. A final hazard classification must be assigned for explosives items that have become operationally fielded and items requiring commercial shipping outside CONUS. DoD final hazard classifications are listed in the JHCS. Access to the JHCS can be made through the Defense Ammunition Center at **https://www3.dac.army.mil**/. Final DoD hazard classifications assigned by Army and Navy hazard classification authorities are acceptable to the Air Force.

Section 3B—Storage and Transportation Without DoD Hazard Classification

3.8. Storage and Transportation Without DoD Hazard Classification. Occasionally it will be necessary to store or transport explosive substances or articles that do not have DoD-assigned final or interim hazard classifications. Since such items are not listed in the JHCS, the unit having custody of these items must exercise care in maintaining appropriate approval and hazard classification documentation at the storage installation. Such documentation may include Department of Energy (DOE) interim hazard classifications, DOT EX-numbers, or locally-assigned storage hazard classifications established in accordance with procedures approved by the AFSC. Paragraphs 3.9, 3.10, 3.11, 3.12, 3.13 describe the circumstances and the respective applicable conditions for storing or transporting AE without DoD hazard classification.

3.9. Explosives With DOE Hazard Classifications.

3.9.1. An item covered by a DOE interim hazard classification may be stored and offered for military or commercial transportation using that classification, subject to the requirements of paragraph 3.9.3. A copy of the applicable DOE interim hazard classification must be maintained at the installation where the items are stored, and must be carried with shipping papers on board each conveyance being used to transport the items under that interim hazard classification.

3.9.2. An item covered by a DOE final hazard classification may be stored and offered for military or commercial transportation using that classification, subject to the requirements of **paragraph 3.9.3**. For storage using DOE final hazard classifications, installation records must reflect the DOT EX-number, Class, Division, Compatibility Group, and NEW for each item stored.

3.9.3. **Restrictions on the use of DOE hazard classifications:**

3.9.3.1. Treat DOE assigned HD 1.2 as HD 1.2.1 and DOE assigned HD 1.5 as HD 1.1 unless an Air Force hazard classification authority (see paragraph 3.3) determines a different hazard classification applies.

3.9.3.2. Use the compatibility group assigned by DOE.

3.9.3.3. The NEWQD will equal the NEW. For quantity-distance purposes, the NEWQD of articles hazard classified by DOE as HD 1.4S or as Not-Regulated will equal zero. See paragraph 3.16.4 for MCE for HD 1.2.1.

3.9.3.4. Items must be stored or transported in the same or equivalent packaging in which they were hazard classified.

3.10. DoD-Owned Non-Stock-Listed Commercial Explosives. A unit may have a requirement to purchase a non-stock-listed commercial explosive product for evaluation or use. Although such items are not standard military inventory items, they are DoD-owned explosives once purchased. Commercial products are items that are not unique to military use and that are legally available for purchase and use by the general public or private businesses. Examples are commercial small arms ammunition, components and propellants; power tool cartridges; fire extinguisher cartridges; signal devices; pest control devices; theatrical special effects items; commercial demolition materials; and blasting agents. The following requirements apply to such explosives:

3.10.1. **Hazard Classification.** The unit may request a DoD interim hazard classification for a non-stock-listed commercial explosive item. Alternatively, store and offer the item for military or commercial transportation using the classification assigned for the product by DOT, subject to the requirements of paragraph 3.10.8. The classification assigned to commercial small arms cartridges by the manufacturer as prescribed in 49 CFR 173.56(h) may also be used for storage and transportation without a DoD hazard classification.

3.10.2. **Requirements for Purchase.**

3.10.2.1. Prior to purchase of a non-stock-listed commercial explosive item for operational use, the requirements below must be accomplished. Requirements for non-stock-listed commercial explosives for research and development activities will comply with 3.10.2.1.2. and applicable MAJCOM supplements to this Manual.

3.10.2.1.1. Safety certification of the item must be obtained as specified in AFI 91-205, *Non-Nuclear Munitions Safety Board*.

3.10.2.1.2. Approval for purchase must be obtained from 784 CBSG. Submit requests for approval according to AFI 21-201, *Conventional Munitions Maintenance Management.*

3.10.2.2. Emergency requirements to purchase non-stock-listed commercial explosives are approved by AFSC/SEW.

3.10.3. Adoption into the DoD Inventory. Commercial explosive items adopted as standard DoD inventory items, as evidenced by centralized item management by an Air Logistics Center (ALC) or by another military service and assignment of a National Stock Number (NSN), must be covered by a DoD interim or final hazard classification.

3.10.4. Commercial Fireworks. Commercial fireworks may not be purchased by the Air Force under any circumstances.

3.10.5. A commercial product received as Black Powder for Small Arms, Class 4.1, Identification Number NA0027, must be stored as Black Powder, HD 1.1D.

3.10.6. A commercial product received as Smokeless Powder for Small Arms, Class 4.1, Identification Number NA3178, must be stored as Powder, Smokeless, HD 1.3C.

3.10.7. A commercial product received as Cartridges, Small Arms, ORM-D, must be stored as HD 1.4C unless a different hazard classification is issued by a DoD or DOE interim hazard classification authority and is on file at the installation.

3.10.8. DOT Hazard Classifications. For storage using DOT hazard classifications, installation files shall reflect the DOT EX-number, Class, Division, Compatibility Group, and NEW, for each item stored.

3.10.8.1. Items classed by DOE or DOT as HD 1.2 must be treated as HD 1.2.1, and HD 1.5 must be treated as HD 1.1, or contact an Air Force hazard classification authority (see paragraph 3.2) to determine if a different hazard classification might apply.

3.10.8.2. Use the compatibility group assigned by DOT.

3.10.8.3. The NEWQD will equal the NEW. For quantity-distance purposes, the NEWQD of articles hazard classified by DOT as HD 1.4S or as Not-Regulated will equal zero. See paragraph 3.16.4 for MCE for HD 1.2.1.

3.10.8.4. Items must be stored or transported in the same or equivalent packaging in which they were hazard classified.

3.11. Manufacturing, Research and Development Items. In manufacturing, research and development environments, explosives samples, substances, subassemblies, and items may be acquired, produced, and stored without DoD, DOT or DOE hazard classifications, provided they comply with paragraph 3.10.2.1.2 and applicable MAJCOM supplements.

3.11.1. These items may be stored and transported on-base in accordance with locally assigned hazard classifications provided a formal procedure for establishing and documenting the hazard classifications is approved by the MAJCOM/SEW and AFSC/SEW.

3.11.2. These items shall not be offered for transportation from the installation or development location until the necessary DoD, DOT or DOE hazard classification is assigned. (Traversing a public roadway between gates or sites on the same installation is considered on-base transportation provided the transportation is in a DoD-owned vehicle operated by DoD personnel.)

3.11.3. These items must have Explosive Ordnance Disposal (EOD) procedures available prior to use. The responsible test organization will ensure local EOD activities receive a Source Data Package (SDP) prior to delivery of test assets. The SDP will be developed according to DID DI-SAFT-80931, *Explosive Ordnance Disposal Data* and TO 00-5-3, *AF Technical Manual Acquisition Procedures*.

3.12. Foreign Explosives. Foreign-owned military AE items brought onto Air Force installations to support multinational military training, exercises, operations or cargo airlift operations may be stored in accordance with the hazard classifications assigned by the appropriate foreign competent authorities, provided:

3.12.1. MAJCOMs document procedures for obtaining AFSC/SEW approval of these items.

3.12.1. **(ACC)** ACC units are authorized to store non-Department of Defense (DoD) owned munitions from foreign nations participating in joint exercises with the US Air Force (USAF)

(e.g., Flag exercises). Safety in conjunction with operations, maintenance and civil engineering staffs will ensure that specific technical guidance and procedures are delineated in applicable instructions to ensure storage, handling and disposal of these foreign munitions is done safely and meets DoD and USAF requirements. Forward a listing of all munitions requiring hazard classification to HQ ACC/SEW for review and approval 30 days prior to the exercise. The listing of munitions shall include as a minimum nomenclature, quantity, compatibility group, net explosive weight (NEW), and United Nations shipping number/name. A coordinated package will be forwarded to AFSC/SEW. Unit will keep AFSC/SEW approval and foreign hazard classification on file for each item.

3.12.2. The procedures required in paragraph 3.12.1 must:

3.12.2.1. Require MAJCOM/SEW to attain and forward to AFSC/SEW shipping documents for each foreign munitions item requiring hazard classification.

3.12.2.2. Require the installation to maintain documentation of AFSC/SEW review and approval of each item.

3.12.2.3. Require the installation to maintain documentation of the foreign hazard classification of each item.

3.12.3. Hazard classification documentation approved by the coalition forces' competent authorities for their explosives and munitions is acceptable (in lieu of interim hazard classifications) for military air transportation between the foreign departure points and foreign destinations, regardless of whether an intermediate stopover in the United States occurs. Such approval documentation is similarly acceptable for in-transit storage of coalition forces' explosives and munitions on U.S. installations worldwide. The coalition approval documentation must, as a minimum, include in English: the assigned proper shipping name, United Nations identification number, hazard class/division and compatibility group, and the quantity of articles per package. Copies of the coalition hazard classification approval documentation must accompany military air shipments and be kept on file at installations where coalition forces' explosives and munitions are temporarily stored during transit. Explosives and munitions classed HD 1.2 by coalition forces' competent authorities will be managed as HD 1.2.1 when sited on real property controlled by the United States, or when possessed by U.S. forces.

3.12.4. DoD Interim Hazard Classifications (IHC) assigned IAW T.O. 11A-1-47 accompanying airlift cargo may be used without AFSC/SEW approval.

3.13. Non-DoD-Owned Explosives. Storage of non-DoD-owned explosives on Air Force installations is prohibited except for specific exceptions stated in AFI 32-9003, *Granting Temporary Use of Air Force Real Property* and 10 USC 2692 with 1998 Authorization Act changes, Storage, treatment, and disposal of nondefense toxic and hazardous materials. Some of these exceptions require approval from the SECAF or Deputy Assistant Secretary of Defense (Environment). Units will forward requests through their MAJCOMs. Coordination will be obtained from MAJCOM A7, A4, JA, SE and AFSC/SEW prior to fowarding to Air Force Real Property Agency (AFRPA) for action. Paragraph 3.13.1 identifies situations that do not require approval. When non-DoD-owned explosives are stored on an Air Force installation under one of the exceptions, DOE or DOT hazard classifications may be used subject to the requirements in paragraph 3.13.2. Commercial launch vehicles must also comply with paragraph 3.13.3.

3.13.1. **Situations Not Requiring Approval.**

3.13.1.1. Ammunition that is privately-owned by military members or their dependents can be stored on an Air Force installation, if the military member is assigned to that installation, or lives in billeting or a dormitory on that installation (see paragraph 7.41).

3.13.1.2. Non-DoD-owned explosives that will be or have been used in connection with an activity of the DoD, or in connection with a service to be performed on a DoD installation for the benefit of the DoD, can be stored or disposed of on an Air Force installation (see paragraph 12.88).

3.13.1.2. **(ACC)** Para 12.88. is not applicable when AFMAN 91-201 Ch. 11 criteria can be met.

3.13.1.3. Non-DoD-owned explosives may be temporarily stored or disposed of on an Air Force installation in order to provide emergency lifesaving assistance to civil authorities (see paragraph 12.88).

3.13.1.4. Non-DoD-owned explosives that constitute military resources intended to be used during peacetime civil emergencies in accordance with applicable DoD regulations may be stored on an Air Force installation (see paragraph 12.88).

3.13.1.5. Explosives of other Federal agencies meeting the definition of "DoD Explosives Operations/Storage" may be stored on an Air Force installation when no alternative solutions are available provided all other storage requirements can be met.

3.13.2. DOE or DOT Hazard Classifications. For storage using a DOE interim hazard classification, a copy of the applicable DOE interim hazard classification must be maintained at the installation where the items are stored. For storage using a DOE final hazard classification, installation records must reflect the DOT EX-number, Class, Division, Compatibility Group, and NEW for each item stored. For storage using DOT hazard classifications, installation files shall reflect the DOT EX-number, Class, Division, Compatibility Group, and NEW, for each item stored. The following additional requirements apply:

3.13.2.1. Items classed by DOE or DOT as HD 1.2 must be treated as HD 1.2.1, and HD 1.5 must be treated as HD 1.1, or contact an Air Force hazard classification authority (see paragraph 3.3) to determine if a different hazard classification might apply.

3.13.2.2. Use the compatibility group assigned by DOE or DOT.

3.13.2.3. The NEWQD will equal the NEW. For quantity-distance purposes, the NEWQD of articles hazard classified by DOE or DOT as HD 1.4S or as Not-Regulated will equal zero. See paragraph 3.16.4 for MCE for HD 1.2.1.

3.13.2.4. Items must be stored or transported in the same or equivalent packaging in which they were hazard classified.

3.13.2.5. A commercial product received as Black Powder for Small Arms, Class 4.1, Identification Number NA0027, must be stored as Black Powder, HD 1.1D.

3.13.2.6. A commercial product received as Smokeless Powder for Small Arms, Class 4.1, Identification Number NA3178, must be stored as Powder, Smokeless, HD 1.3C.

3.13.2.7. A commercial product received as Cartridges, Small Arms, ORM-D, must be stored as HD 1.4C unless a different hazard classification is issued by a DoD or DOE interim hazard classification authority and is on file at the installation.

3.13.3. Commercial Launch Vehicles.

3.13.3.1. The responsible commander must contact the responsible MAJCOM/SEW, who will in turn contact AFSC/SEW hazard classification authority for the assignment of an HD 1.3 hazard classification of a rocket motor.

3.13.3.2. For commercial launch vehicles fueled by liquid propellants, the explosive equivalents of the fuel combinations (see Section 12N) may be used instead of the total weight of fuel in the vehicle for quantity-distance purposes. Lesser weights, based on launch vehicle failure analyses, may be used with the approval of AFSC/SEW and DDESB. Likewise, a commercial solid rocket booster or booster section located at a DoD range launch facility may be stored using an NEWQD less than 100 percent of the propellant weight only with approval of AFSC/SEW and DDESB.

Section 3C—Hazard Classification of Unpackaged Items

3.14. Hazard Classification of Unpackaged Items. When ammunition or explosive items are not in the form and packaging in which they are normally stored and shipped, different hazard classifications may apply due to changes in spacing, orientation, confinement, and other factors. Sometimes testing of unpackaged components may be required in order to demonstrate the validity of classifications used for siting unpackaged ammunition, or conservative assumptions must be made about the potential severity of an accidental explosion. Contact an Air Force hazard classification authority (see paragraph 3.3) for assistance in determining the hazard classification of an unpackaged item.

3.14.1. The hazard classification for some unpackaged items may be given in paragraph 3.14.2. or in the item T.O. Items designated as Not-Regulated, CG S, were classed based on how the unpackaged item reacts. Therefore the presence or absence of packaging does not change that designation.

3.14.2. **The following are hazard classifications for certain unpackaged items:**

3.14.2.1. Cartridges, 40mm, HEDP, M433 stored in CNU 541/E Containers (modified MK 387 MOD 0 containers with CEMCOM buffer liners) are HD 1.2.2, with an NEWQD of 0.102 pounds per cartridge. This hazard classification is for storage only, not for transportation. (Note: CNU 541/E Containers are no longer available; this information is provided for existing containers.)

3.14.2.2. Cartridges, 40mm, GP, M406 stored in 18-round Ammunition Carrying Vests folded into M2A1 or M548 Ammunition Cans with plastic projectile covers installed are hazard classified as HD 1.2.2E, SG-3. This hazard classification is for storage only and requires each cartridge to be securely nested into a projectile cover made by cutting the 3-round plastic supports from approved bandoleer packs into single-round supports. This hazard classification is for storage only, not for transportation.

3.14.2.2.1. 40mm HE/HEDP are HD 1.1. when out of approved packaging configuration.

3.14.2.3. 20mm and 30mm HEI cartridges, which are designated HD 1.2.2 packaged, remain HD 1.2.2 when unpackaged.

3.14.2.4. Cartridges for small arms which have inert or tracer projectiles, are below .50 caliber, and are not in their standard packaging are classified as HD 1.4S when kept in closed metal ammunition boxes. They are considered HD 1.4C in other containers.

3.14.2.5. CBU-87/89/97/103/104/105, T-1 Versions, are considered HD 1.2.2 out of their shipping container.

3.14.2.6. 2.75-in Infrared Illuminating Warheads (M278) and the 2.75-in White Phosphorus Warheads (M156) stored in a LAU-131 launcher or transportation module (out of shipping containers) are classified as HD 1.2.1. This hazard classification does not apply to public transportation.

3.14.2.7. HD 1.3 Minuteman and HD 1.3 Peacekeeper missile stages with an HD 1.1 type (CL1/AODS) destruct system installed are considered HD 1.3.

Section 3D—Class 1 Divisions and Subdivisions

3.15. HD 1.1 – Mass-explosion.

3.15.1. Blast is the primary hazard in this division. HD 1.1 items may be expected to mass-detonate when a small portion is initiated by any means. These explosions generally cause severe structural damage to adjacent objects. Propagation may occur so rapidly to unprotected explosives stored near the initially exploding stack that the quantities must be considered as a single source for QD purposes. The combined shock wave, in this case, is the same as a single detonation of a charge equal to the total of the stacks (see simultaneous detonation in Attachment 1).

3.15.2. Items in this division also generally present a fragmentation hazard, either from the case of the explosive device or from the packaging or facility in which the explosives are stored.

3.15.3. HD 1.1 items include bulk high explosives, some propellants, mines, bombs, demolition charges, some missile warheads, some rockets, palletized projectiles loaded with bulk trinitrotoluene (TNT) or Comp B, mass-detonating cluster bomb units (CBU), and ammunition components having mass-detonating characteristics.

3.16. HD 1.2 – Non-mass Explosion, Fragment Producing.

3.16.1. Items in this division will not mass detonate when configured for storage or transportation if a single item or package is initiated. When these items function, the results are burning and exploding progressively with no more than a few reacting at a time. The explosion will throw fragments, firebrands, and non-functioned items from the point of initiation. Blast effects are limited to the immediate vicinity and are not the primary hazard.

3.16.2. In an incident, the quantity distances specified for HD 1.2 items achieve the desired degree of protection against immediate hazards. Events involving HD 1.2 items lob large amounts of unexploded rounds, components, and subassemblies, which remain hazardous after impact. Such items are likely to be more hazardous than they were in their original state because fuze safety devices or other features may sustain heat and impact damage. Expect

the sub-munitions, such as cluster bombs, of many types of munitions,to project distances as great as the relevant inhabited building distances. Furthermore, it is impractical to specify quantity distances which allow for the maximum possible flight ranges of propulsive items.

3.16.3. HD 1.2 items' functioning effects vary with the size and weight of the item. These items are separated into three subdivisions (1.2.1, 1.2.2, 1.2.3) to account for the differences in magnitude of these effects and to set quantity-distance criteria.

3.16.4. HD 1.2.1. Generally, these items have an NEWQD greater than 1.60 pounds or exhibit fragmentation characteristics similar to or greater than (higher density, longer distance) M1 105 mm projectiles regardless of NEWQD. The MCE for a specific HD 1.2.1 item is the largest quantity of explosives expected to explode at one time when a stack of those specific items is involved in a fire. MCEs will be included in the JHCS for each HD 1.2.1 item. If the MCE is not available, use the default MCE determined by multiplying NEWQD in a single container by three.

3.16.5. HD 1.2.2. Generally, these items have an NEWQD less than or equal to 1.60 pounds or that at most exhibit fragmentation characteristics similar to high-explosive 40mm ammunition regardless of NEWQD.

3.16.6. HD 1.2.3. These items do not exhibit any sympathetic detonation response in the stack test, or any reaction more severe than burning in the external fire test, bullet impact test, or slow cook-off test.

3.17. HD 1.3 – Mass Fire, Minor Blast or Fragment. Items in this division burn vigorously and the fires are difficult to put out. Explosions are caused by pressure ruptures of containers, which may produce fragments (especially missile motors) but will not produce propagating shock waves or damaging blast overpressure beyond intermagazine distance. Burning container materials, propellant, firebrands, or other debris may be projected randomly, presenting a severe fire hazard. Depending on the amounts of burning explosive materials, their downwind toxic effects usually do not extend beyond inhabited building distances.

3.18. HD 1.4 – Moderate Fire, No Significant Blast or Fragment. Items in this divison present a fire hazard but no blast hazard. There is virtually no fragmentation or toxic hazard beyond the fire hazard clearance ordinarily specified for high-risk materials.

3.19. HD 1.5 – Explosive Substance, Very Insensitive (With Mass Explosion Hazard). Substances in this division have a mass explosion hazard but are so insensitive that there is very little probability of initiation or of transition from burning to detonation under normal transport or storage conditions.

3.20. HD 1.6 – Explosive Article, Extremely Insensitive. Items in this division contain only extremely insensitive detonating substances (EIDS), and demonstrate a negligible probability of accidental ignition or propagation. Fuzed HD 1.6 items must contain either an EIDS fuze or a non-explosive fuze (i.e. the fuze contains no explosives), otherwise the item is classified as HD 1.2.3.

Section 3E—Compatibility Groups and Sensitivity Groups

3.21. Storage and Transportation Compatibility Groups.

3.21.1. **Group A.** This group includes bulk initiating explosives that have the necessary sensitivity to heat, friction, or percussion to make them suitable for use as initiating elements in an explosive train. Examples include bulk lead azide, lead styphnate, mercury fulminate, tetracene, dry cyclonite (RDX), and dry pentaerythritol tetranitrate (PETN).

3.21.2. **Group B.** This group includes detonators and similar initiating devices which do not contain two or more effective protective features. It also includes items containing initiating explosives designed to initiate or continue the functioning of an explosive train. Examples include detonators, blasting caps, small arms primers, and fuzes.

3.21.3. **Group C.** This group includes bulk propellants, propelling charges, and devices containing propellant with or without its own means of ignition. Examples include bulk single-, double-, or triple-base, and composite propellants, rocket motors (solid propellant), and propelled AE with inert projectiles.

3.21.4. **Group D.** This group includes bulk black powder and bulk HE. It also includes AE which has no propelling charge, but does contain HE without its own means of initiation, i.e., there isn't an initiating device present or the device has two or more effective protective features. Examples include TNT, Composition B, and black powder; bulk wet RDX or PETN; bombs, projectiles, CBUs, depth charges, and torpedo warheads.

3.21.5. **Group E.** AE in this group contains high explosive (HE) without its own means of initiation but with, or containing, a solid propelling charge. Examples include artillery AE, rockets, and guided missiles.

3.21.6. **Group F.** AE in this group contains HE with its own means of initiation, i.e., the initiating device present has less than two effective protective features, and may or may not have a solid propelling charge. Examples include grenades, sounding devices, and similar items with less than two effective protective features in their explosive trains.

3.21.7. **Group G.** This group includes illuminating, incendiary, and smoke- (including hexachlorethane [HC]) or tear-producing AE. This excludes AE that are water-activated, contain white phosphorus (WP) or are flammable liquids or gels. Examples include flares, signals, and pyrotechnic substances.

3.21.8. **Group H.** In this group, AE contain WP or fillers that are spontaneously flammable when exposed to the atmosphere. Examples include WP and plasticized white phosphorus (PWP).

3.21.9. **Group J.** In this group, AE contain flammable liquids or gels other than those that are spontaneously flammable when exposed to water or the atmosphere. Examples include liquid or gelfilled incendiary AE, fuelair explosive (FAE) devices, and flammable liquidfueled missiles and torpedoes.

3.21.10. **Group K.** In this group, AE contain toxic chemical agents or contain chemicals specifically designed for incapacitating effects more severe than lachrymation (tear-producing). Examples include artillery or mortar AE (fuzed or unfuzed), grenades, rockets and bombs filled with a lethal or incapacitating chemical agents. (See Table 7.1, Note 4.)

3.21.11. **Group L.** This group contains AE not included in other CG, such as AE with characteristics that present a special risk that does not permit storage with other types of AE or with dissimilar AE of this group. Examples include water-activated devices, pyrophorics and phosphides and devices containing these substances, prepackaged hypergolic liquid-fueled rocket engines, triethyl aluminum (TEA), thickened TEA (TPA), and damaged or suspect AE of any group. (Note: Different types of AE in CG L presenting similar hazards may be stored together.)

3.21.12. **Group N.** In this group, AE contain only extremely insensitive detonating substances (EIDS). An example is HD 1.6 AE.

3.21.13. **Group S.** AE in this group present no significant hazard. AE packaged or designed so that any hazardous effects from accidental functioning are limited to an extent that they do not significantly hinder firefighting are included in this group. Projections shall not exceed 8 Joules. Examples include explosive switches or valves, and small arms ammunition.

3.22. Sensitivity Groups. Where ARMCO or equivalent earth-filled steel bin revetments or substantial dividing walls are used for storage purposes, each HD 1.1 and HD 1.2 AE item is designated, based on its physical attributes, into one of five SG. Directed energy weapons are further identified by assigning the suffix "D" following the SG designation (e.g., SG2D). The SG assigned to an AE item is listed in the JHCS (see paragraph 6.28.3 for application and use of SG criteria with substantial dividing walls to prevent prompt detonation reactions to adjacent rooms or cubicles). Item-specific testing or analyses can be used to change an item's SG. The five SG, in relative order from least sensitive to most sensitive, are:

3.22.1. **SG 2.** Non-robust (see glossary in Attachment 1) military munitions.

3.22.2. **SG 1.** Robust (see glossary in Attachment 1) military munitions.

3.22.3. **SG 3.** Fragmenting military munitions.

3.22.4. **SG 4.** Cluster bombs or dispenser unit military munitions (see glossary in Attachment 1).

3.22.5. **SG 5.** Sympathetic detonation (SD) sensitive military munitions.

Chapter 4

RISK ASSESSMENTS AND PROTECTION PRINCIPLES

Section 4A—Risk Assessments

4.1. Requirements for Risk Assessments. Risk assessments are required for all new or modified explosives, explosives operations, equipment and facilities when not specifically covered in current AF guidance and/or approved publications. These risk assessments will be used to identify design and operations criteria (e.g., shielding, protective clothing). See Chapter 2 for reaction effect information to support risk assessments. The risk assessment will consider the following factors, as appropriate:

4.1.1. Initiation sensitivity.

4.1.2. Quantity of materials.

4.1.3. Heat output.

4.1.4. Rate of burn.

4.1.5. Potential ignition and initiation sources.

4.1.6. Protection capabilities of shields, types of clothing, and fire protection systems.

4.1.7. Personnel exposure.

4.2. Risk Assessments.

4.2.1. Explosives safety criteria in this Manual help commanders make informed decisions on the proper mix of combat readiness and safety. This criteria specifies minimum acceptable standards for explosives safety. Compliance with these criteria still entails a significant risk to personnel, assets and facilities. Risk management (RM) (see paragraph 4.3) may be used to further reduce, mitigate, or accept risks.

4.2.2. Explosives risk assessments are a subset of the commander's overall risk management program. An explosives risk assessment analyzes hazards associated with transporting, storing, disposing of, handling or firing ammunition and explosive materials. Explosives risk ssessments may range from examining the relationship between a PES and an ES to determine what effect one has on the other in the event of an accidental explosion, to ascertaining the worst credible event ramifications of an explosives handling mishap. Although risk assessments are required when explosives standards cannot be met, they shall also be routinely used in other instances as a commander's management tool. For example, combat loaded aircraft parked on an open ramp, separated by K11, meet the required QD separation per this Manual. However, commanders shall also be advised that in this situation the total destruction of adjacent aircraft is certain and that a delayed propagation is likely in the event of an explosion on one of the combat loaded aircraft. The commander shall also be apprised of the probability of such an event happening.

4.3. Risk Management (RM). According to AFI 90-901, *Risk Management*, the following RM principles apply: (1) Accept no unnecessary risk, (2) Make risk decisions at the appropriate level, (3) Accept risk when benefits outweigh the costs, (4) Integrate RM into Air Force Doctrine and planning at all levels. Refer to AFPAM 90-902, *Risk Management (RM) Guidelines and Tools*,

for methods on eliminating or reducing risk to support the six-step process of RM (see Figure 4.1). The RM process may not be used to violate directives or other regulatory guidance; normal waiver or variance procedures must be followed in all cases. For exceptions to criteria in this Manual, refer to Section 1B.

4.4. System Safety. System safety is the application of engineering and management principles, criteria, and techniques to optimize all aspects of safety within the constraints of operational effectiveness, time, and cost throughout all phases of the system life cycle. The system safety process is governed by MIL-STD-882D, *System Safety*, and is intended to ensure hazards are identified early enough in the design phase of a program to either remove them through engineering design changes or to mitigate the associated risk to an acceptable level. Similar to the RM process, the system safety process requires the remaining risk to be accepted by the appropriate authority.

4.5. Professional Assistance for Risk Assessments and System Safety Analyses. Units may experience situations when civil, structural, electrical, safety, etc. engineering support is required to perform a risk assessment or system safety analysis. There are numerous governmental and non-governmental organizations available for professional assistance. Contact your MAJCOM/SEW for assistance.

Section 4B—Munitions Systems and Equipment

4.6. Safety Certification of Munitions Systems. All operational non-nuclear munitions systems used by the Air Force require safety certification as specified in AFI 91-205, *Non-Nuclear Munitions Safety Board*. Risk assessments are accomplished, using the systems safety process for all new or modified operational munitions systems as a part of this safety certification process. The safety certification process ensures that residual risks are mitigated to an acceptable level via engineering or procedural controls. Engineering controls are incorporated into the design. Procedural controls are documented in item T.O.s, or other operating procedures and instructions.

4.6. (ACC)Safety Certification of Munitions Systems. HQ ACC/SEW is the ACC representative to the Non Nuclear Munitions Safety Board. Issues requiring the board's attention will be staffed through HQ ACC/SEW.

4.7. Risk Assessments for Explosives Equipment. Risk assessments for new or modified explosives equipment are typically accomplished as part of the munitions safety certification process (see **paragraph 4.6**) and resultant engineering controls are incorporated into the design. Procedural controls are documented in the item T.O. or other operating procedures and instructions. For explosives equipment unique to the local environment, perform a risk assessment and document any required procedural controls in a locally written instruction (see Section 7B).

Section 4C—Explosives Operations and Facilities

4.8. Risk Assessment for Explosives Operations. Risk assessments for new or modified explosives operations are typically accomplished as part of the munitions safety certification process (see paragraph 4.6) and resultant engineering controls are incorporated into the munitions system, equipment, or facility design. Procedural controls are documented in the item

T.O. or other operating procedures and instructions. For explosives operations unique to the local environment, risk assessments are implemented through the explosives site plan; document any operational limitations in a locally written instruction to ensure safety (see Section 7B).

4.9. Risk Assessments for Explosives Facilities.

4.9.1. Responsible agencies perform risk assessments when they establish a definitive drawing for proposed new explosives facilities. No further risk assessments need to be accomplished.

4.9.2. Design agents are responsible for the risk assessment of new or modified explosives facilities which do not have a definitive drawing. They must accomplish the risk assessment as part of the design process.

4.9.3. When protective construction (see Section 6B) is required for the new or modified explosives facility (or any exposed facility), the requirement for risk assessments, systems safety analyses, and engineering analyses as well as the requirements for protective construction design must be included in the Requirements and Management Plan (RAMP) for military construction (MILCON) projects to ensure funding. Refer to AFI 32-1023, *Design and Construction Standards and Execution of Facility Construction Projects*, for further information on the RAMP. Weapons safety personnel from the organization responsible for the construction will advise Civil Engineering on which risk assessments and analyses are required and should be included in the RAMP and the contract.

4.9.4. When protective construction is not required for the new or modified explosives facility (or any exposed facility), the explosives site plan will satisfy the risk assessment requirement.

4.9.5. Risk assessments for modifications to explosives facilities will assess whether the modification will cause additional hazards or reduce the effectiveness of built-in safety features of the facility.

Section 4D—Glass Breakage Risk Assessments

4.10. Purpose of Glass Breakage Risk Assessments. In the event of an explosives mishap, glass can present a significant hazard to personnel in exposed facilities out to distances well beyond the IBD arc. Glass breakage risk assessments determine the extent of this hazard, and identify potential mitigation techniques, to reduce the hazard to an acceptable level. If the hazard cannot be reduced to an acceptable level, the glass breakage risk assessment can be used to ensure the approving authority makes an informed risk acceptance decision.

4.11. Requirements for Performance of Glass Breakage Risk Assessments.

4.11.1. Glass breakage risk assessments, performed in accordance with paragraph 4.13, are required as follows:

4.11.1.1. For modification of an existing occupied facility within an IBD arc as described in paragraph 5.2.2.

4.11.1.2. For modified operations in an existing occupied facility (when acting as an exposure) within an IBD arc. When the risk assessment reveals a hazard to personnel, use engineering mitigation actions (see paragraph 4.14), if feasible, to eliminate the hazard or

reduce it to an acceptable level. Remaining risk must be accepted by the responsible commander.

4.11.1.3. For existing occupied facilities (when acting as an exposure) within the proposed IBD arc of a new PES. If the risk assessment shows there will be a hazard to personnel, use engineering mitigation actions (see paragraph 4.14), if feasible, to eliminate the hazard or reduce it to an acceptable level. Remaining risk must be accepted by the responsible commander.

4.11.1.4. For existing occupied facilities (when acting as an exposure) within the IBD arc of an existing PES where modified operations will increase the explosive hazard of the PES. If the risk assessment shows there will be a hazard to personnel, use engineering mitigation actions (see paragraph 4.14) if feasible to eliminate or reduce the hazard to an acceptable level. Remaining risk must be accepted by the responsible commander.

4.11.1.5. For new occupied facilities located within the IBD arc of any existing PES.

4.11.2. Glass breakage risk assessments are recommended in the following situations:

4.11.2.1. As a baseline assessment for all existing occupied buildings within an existing IBD arc.

4.11.2.2. As a baseline assessment for all existing occupied buildings of a sensitive nature (e.g. schools, off-base buildings, on-base buildings with significant public access such as a commissary, buildings with large amounts of glass panels, etc.) inside or near IBD arcs.

4.12. Software Tools for Glass Breakage Risk Assessments. Window Glazing Analysis Response and Design (WINGARD PE) is the recommended tool to be used for performing glass breakage risk assessments. Other glass analysis software as identified in DDESB TP 20, *Explosion Effects Software*, may also be used. If software programs are not available, information found in chapter 2 of this Manual may be used for performing basic glass breakage risk assessments. See paragraph 4.13 for additional information.

4.12.1. WINGARD PE outputs the expected results (break versus no-break) along with the expected distance of glass shard travel. It also shows the blast parameters experienced and the required bite. It provides charts and graphs showing glass displacement, velocity, acceleration, fragment flight, and more.

4.12.2. WINGARD PE requires a great range of input parameters.

4.12.2.1. Window size.

4.12.2.2. Window location in relation to the PES.

4.12.2.3. Window construction to include, but not limited to:

4.12.2.3.1. Type of glass.

4.12.2.3.2. Number of panes.

4.12.2.3.3. Thickness of panes.

4.12.2.3.4. Type of glazing.

4.12.2.4. Use ¼" single pane annealed glass windows if these parameters cannot be determined for a worst case scenario analysis.

4.12.3. WINGARD PE was developed for General Services Administration (GSA) by the Applied Research Associates Security Engineering Group. To obtain a free copy of the program, forward request through appropriate MAJCOM/SEW.

4.13. Methodology for Glass Breakage Risk Assessments.

4.13.1. The tool(s) selected for performing a glass breakage risk assessments should be based on the intent of the analysis. For example, if the intent is to demonstrate windows will not break due to design, placement, or treatment, then a detailed software based assessment is required. If however, the intent is to only demonstrate a hazard exists and injuries are possible, the information found in chapter 2 of this Manual may be sufficient for obtaining responsible commanders risk acceptance.

4.13.2. Glass breakage risk assessments should identify the risk to personnel from glass breakage and, if necessary, evaluate the effect of engineering mitigation actions (see paragraph 4.14) to reduce the risk to an acceptable level. Protection level "Medium" as defined in UFC 4-010-01, *DoD Minimum Antiterrorism Standards for Buildings*, or WINGARD PE performance condition 2 as defined in GSA-TS01-2003, *Standard Test Methods for Glazing and Window Systems Subject to Dynamic Overpressure Loadings*, are considered acceptable levels of protection.

4.13.3. Glass breakage risk assessments should:

4.13.3.1. Consider the presence and distance of personnel from glass panels.

4.13.3.2. Evaluate the worst case event likely to expose glass panels to blast hazards. Glass panels that are exposed to multiple explosives facilities would necessitate evaluation only for the explosives facility that would place the maximum blast loading on the glass panels. Blast loading from HD 1.2.1 AE will be based on the MCE. Blast loading from HD 1.2.3 AE will be based on the NEWQD of the largest single round.

4.13.3.3. Show the anticipated blast loading. For example, show which facility produces the blast loading, the actual separation distance, what HD and NEWQD produces the blast loading; and what the glass panel parameters (e.g., type, size, pane thickness) are.

4.13.3.4. Identify engineering actions taken to mitigate the hazards to personnel from glass breakage.

4.14. Engineering Mitigation Actions for Reducing or Eliminating Glass Breakage Hazards to Personnel.

4.14.1. Minimize the number and size of glass panels.

4.14.2. Orient the exposed facility to minimize blast loads on glass panels.

4.14.3. Minimize or remove glass panels on the side of facilities which face explosives facilities.

4.14.4. Use tempered glass which will break into small pieces with rounded edges.

4.14.5. Use glazing, anti-shatter films, or net/blast curtains. Where films are used, the base fire department should note this type construction on pre-fire plans to facilitate fire-fighting personnel entry in emergency situations.

4.14.6. The WinDAS Analysis Guide module describes several engineering mitigation actions as well as sources for materials required. It can be found at **https://pdc.usace.army.mil/software/windas/**

Section 4E—Health Hazard and Environmental Assessments

4.15. Health Hazard Assessments. Using organizations must ensure Bioenvironmental Engineering (BE) conducts a health hazard assessment of the work area and operation when dust or concentrations of vapors, fumes, or gases from explosives, equipment, or other chemicals in the work area are present. The squadron commander must accept bioenvironmental assessment risks before operations may begin.

4.16. Environmental Assessments. Using organizations must ensure each explosives operation is evaluated for compliance with environmental standards. The evaluation must include all hazardous wastes generated during all phases of the operation. Written procedures will identify requirements for the control, storage, and disposition of hazardous wastes.

Section 4F—Protection Principles

4.17. Protective Shielding and Remotely Controlled Operations. This paragraph does not apply to rod and gun club operations.

4.17.1. Equipment specialists will perform a risk assessment to determine if an operation requires protective shielding and must be remotely controlled for personnel protection. Specify shielding and remote control requirements in the item T.O. As a minimum, protective shielding must be made available to personnel when test procedures cannot ensure explosives are totally isolated and protected from potentially harmful environments such as electrical current or heat. Operations such as continuity checks of electrically actuated explosives devices, propellant cutting, explosives component assembly, modification, or disassembly and demilitarization may require shielding or be accomplished from a remote controlled location.

4.17.2. When a risk assessment indicates that there is an unacceptable risk from an accidental explosion or a flash fire, personnel will be provided protection from blast, fragments and thermal effects, to include respiratory and circulatory hazards, as follows:

4.17.2.1. Personnel protection must limit incident blast overpressure to 2.3 psi, fragments to energies of less than 58 ft-lb, and thermal fluxes to 0.3 calories per square centimeter per second.

4.17.2.2. K24 distance provides the required level of protection for blast and thermal effects only.

4.17.2.3. Shields that comply with MIL-STD-398, *Shields, Operational for Ammunition Operations, Criteria for Design and Tests for Acceptance*, provide acceptable protection for blast, thermal and fragment effects.

4.17.3. The use of protective shielding or remotely controlled operations must be approved as part of the explosives site plan (see paragraph 14.25.3).

4.17.4. The T.O. managing agency must ensure safe design and testing of specific protective devices when required by a T.O. Test for a 25-percent overload and obtain approval from the Non-Nuclear Munitions Safety Board (NNMSB).

4.17.5. When a using command establishes a requirement for protective devices, that command must ensure that these devices are of a safe design. Test for a 25-percent overload.

4.18. Intentional Ignition or Initiation of AE. At operations (e.g., function, proof, lot acceptance testing) where intentional ignition or initiation of AE is conducted (except EOD operational responses), the following requirements apply:

4.18.1. Operating personnel protection will:

4.18.1.1. Meet the requirements of paragraph 4.17.2.1.

4.18.1.2. Contain or defeat all fragments.

4.18.1.3. Limit thermal flux to "Q" (calories/square centimeter/second) = $0.62t^{-0.7423}$ where "t" is the time in seconds that a person is exposed to the radiant heat. ***NOTE:*** Shields that comply with MIL-STD-398 provide acceptable protection. Comply with testing requirements of paragraph 4.17.4 or 4.17.5.

4.18.1.4. Limit overpressure levels in personnel-occupied areas to satisfy MIL-STD-1474D, *Noise Limits*.

4.18.2. The use of protective shielding must be approved as part of the explosives site plan (see paragraph 14.25.3).

4.18.3. Areas used for intentional detonations meet the requirements of paragraphs 4.18.1.1 through 4.18.1.3 for protection of essential personnel provided the QD requirements of paragraph 12.74.4.1 or 12.74.4.2 are met.

4.18.4. EOD proficiency training ranges meet the requirements of paragraphs 4.18.1.1 through 4.18.1.3 for protection of essential personnel provided the QD requirements of paragraph 12.76 are met.

4.18.5. Static test firing of propellant-loaded items (see paragraph 12.78) must meet the requirements of paragraph 4.18.1 for protection of operating personnel.

4.19. Protective Measures. Personnel protection may be increased by:

4.19.1. Eliminating or establishing positive control of ignition and initiation stimuli.

4.19.2. Using sufficient distance or barricades to protect from blast or fragments.

4.19.3. Using Substantial Dividing Walls (SDW) or properly rated fire walls to protect from fragment or thermal hazards.

4.19.4. UFC 3-340-02, *Structures to Resist the Effects of Accidental Explosions*, contains design procedures to achieve personnel protection, protect facilities and equipment, and prevent propagation of explosions.

4.19.5. Using fire detection and extinguishing systems (e.g., infra-red actuated deluge system) in those areas where exposed, thermally-energetic materials that have a high

probability of ignition and a large thermal output are handled. Such systems must maximize the speed of detection, have adequate capacity to extinguish potential flash fires in their incipient state, and maximize the speed of the application of the extinguishing agent.

4.19.6. Using thermal shielding between the thermal source and personnel in AE operational areas, where it is essential for personnel to be present and the risk assessment indicates that an in-process thermal hazard exists. Any shielding used must comply with MIL-STD-398. When shielding is either not possible or inadequate, to include a failure to protect exposed personnel's respiratory and circulatory systems, augmentation with improved facility engineering design and personnel protective clothing and equipment may be necessary.

4.19.7. Using thermal protective clothing that is capable of limiting bodily injury to first degree burns (0.3 calories per square centimeter per second) with personnel taking turningevasive action, when the maximum quantity of combustible material used in the operation is ignited.

4.19.8. Using protective clothing capable of providing respiratory protection from the inhalation of hot vapors or any toxicological effects, when the risk assessment indicates adverse effects would be encountered from the inhalation of combustion products.

4.20. Emergency Operations. If an immediately dangerous explosive situation is encountered, all operations in the immediate vicinity will be shut down, personnel evacuated to a safe location, and EOD personnel called to analyze and eliminate the hazard. Operations will not be resumed until the hazard has been eliminated, removed, or otherwise determined to be safe by EOD personnel. Installations without on-site EOD support must make pre-planned arrangements for emergency measures such as bomb threats, hung flares, ground burst simulators, etc. These arrangements must be coordinated with the MAJCOM Safety and EOD Functional Staff.

4.20.1. Locations used repeatedly for the emergency destruction of recovered military ordnance or hazardous explosive devices should have a risk assessments pre-established and on file.

4.20.2. Emergency destruction operations conducted at reduced QD ranges and non-standard destruction sites (e.g., EOD proficiency ranges or non-sited remote locations) may require the use of protective measures to limit fragmentation hazards. When the time and situation allows, emergency responders will use applicable technical data (e.g., joint EOD publications and DDESB Technical Paper 16) to apply protective measures. Construction of protective works should neither hinder the conduct of time-sensitive emergencies nor place emergency responders under increased risks.

Figure 4.1. Five Step Process for Risk Management

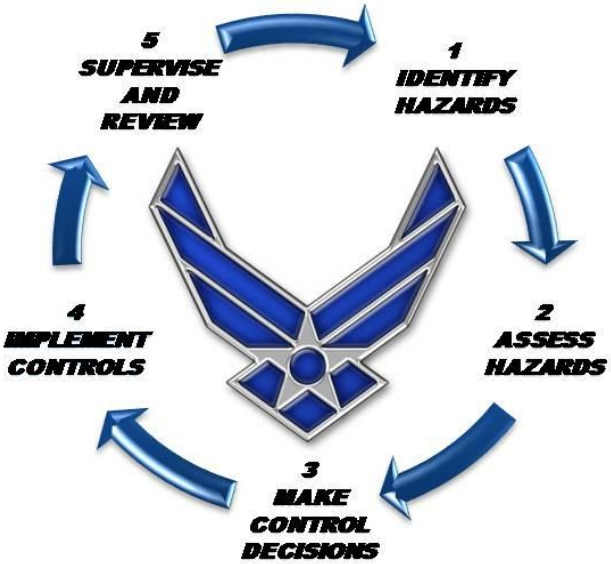

1. Identify the Hazards. Step one of the process involves application of appropriate hazard identification techniques in order to identify hazards associated with the operation or activity. Hazards can be defined as any real or potential condition that can cause mission degradation; injury, illness, death to personnel, damage to or loss of equipment/ property.

2. Assess the Risks/Hazards. The assessment step involves the application of quantitative and/or qualitative measures to determine the probability and severity of negative effects that may result from exposure to risks/hazards and directly affect mission or activity success. This can be a formalized or intuitive process.

3. Make Risk Control Decision. Step three involves the evaluation of specific strategies and controls that reduce or eliminate risk. Effective mitigation measures reduce one of the three components (probability, severity or exposure) of risk. Risk mitigation decisions must be made at the appropriate level for the identified risk. The higher the risk, the higher the decision-level needs to be to ensure that an appropriate analysis of overall costs to benefits has been carefully weighed. Decision-makers must ultimately choose the most mission supportive risk controls, consistent with RM principles that provide the best solution for the given hazards. Risk decisions should never be delegated to a lower level for convenience or when the situation dictates senior-level involvement; exceptions may be considered in time critical situations where delays might endanger lives, resources or equipment.

4. Implement Risk Controls. Once control measures have been selected, an implementation strategy must be developed and carried out. The strategy must identify the: who, what, when, where and cost(s) associated with the control measure. For mission-related controls, accountability must be emphasized across all levels of leadership and personnel associated with the action so that there is clear understanding of the risks and responsibilities of commanders and subordinates alike. There must always be accountability for acceptance of risk regardless of circumstances.

5. Supervise and Review. Risk Management is a process that continues throughout the life cycle of the system, mission, or activity. Leaders and supervisors at every level must fulfill their respective roles in ensuring controls are sustained over time. Once controls are in place, the process must be periodically reevaluated to ensure controls remain effective and mission supportive over time. Note: For a more complete explanation of the 5-Stpe RM process refer to AFPAM 90-902.

Chapter 5

GENERAL EXPLOSIVES FACILITY DESIGN, CONSTRUCTION AND MAINTENANCE, AND EQUIPMENT DESIGN, MAINTENANCE AND INSPECTION

Section 5A—Introduction

5.1. Applicability.

5.1.1. Unless otherwise specified, the design requirements in this chapter apply to all existing and new construction of explosives facilities, to include specific explosives facility designs covered in Chapter 6. Unless specifically excluded, the requirements in this chapter apply to licensed explosives storage locations and to locations involving explosives operations which do not require explosives siting. This chapter also provides requirements for the construction, maintenance, and repair of explosives facilities as well as equipment in these facilities.

5.1.2. This chapter does not address extraordinarily hazardous situations (e.g., nitroglycerin manufacturing) that will require special consideration and design features. In these situations, the MAJCOM will develop specific design criteria.

5.1.3. Additional criteria specific to nuclear weapons storage, handling, and maintenance facilities apply as provided in AFMAN 91-118, *Safety Design and Evaluation Criteria for Nuclear Weapon Systems.*

Section 5B—Glass Panels

5.2. Glass Panels in Facilities Exposed to Explosives Hazards.

5.2.1. For construction of a new occupied facility within an IBD arc, do not use glass panels unless deemed operationally necessary. If the use of glass panels is deemed operationally necessary, comply with the following requirements, or process a deviation in accordance with paragraph 1.4:

5.2.1. **(ACC)** Evaluate the operational necessity for windows within clear zones. Include a justification statement in the site planning package.

5.2.1.1. Design the panels so that they will not break under the expected blast loading; the framing and sash of such panels must be of sufficient strength to retain the panel in the structure under the expected blast loading. Or, design the panels so that they will withstand the same blast loading as the structure; the framing and sash of such panels must be of sufficient strength to retain the panel until the point of structural failure.

5.2.1.2. Provide engineering analyses and design details, as part of the explosives site plan package, to demonstrate compliance with paragraph 5.2.1.1. The analyses must include the information addressed in paragraphs 4.13.2. and 4.13.3.

5.2.2. For modification of an existing occupied facility within an IBD arc, remove existing glass panels, if practical, as part of the scope of modification. Do not add glass panels unless deemed operationally necessary. If existing glass panels are not removed, perform a glass breakage risk assessment (see paragraph 4.13); if the risk assessment shows there will be a

hazard to personnel, use engineering mitigation actions (see paragraph 4.14) to eliminate the hazard or process a deviation in accordance with paragraph 1.4. If the addition of glass panels is deemed operationally necessary, comply with paragraphs 5.2.1.1 and 5.2.1.2 or process a deviation in accordance with paragraph 1.4.

5.2.3. Existing glass panels that are replaced due to damage (i.e., cracked or broken) must be replaced with equivalent strength or stronger glass panels.

5.2.4. Glass skylights will not be used in any facility within an IBD arc.

Section 5C—Hazardous Locations

5.3. Hazardous Locations. Comply with NFPA 70, *National Electrical Code (NEC)*, Article 500, *Hazardous (Classified) Locations,* requirements for the design and installation of electrical equipment and wiring for hazardous locations. Hazardous locations are those in which combustible dusts, or flammable vapors or gases are or may be present in the air in quantities sufficient to produce explosive or ignitable mixtures.

5.3.1. The presence of explosives does not necessarily make an area a hazardous location. To ensure proper identification of a hazardous location, it is necessary to have knowledge of the properties of the explosives involved, especially thermal stability and sensitivity to heat and spark. Use NEC definitions, as modified below, to identify and classify hazardous locations involving explosives.

5.3.1.1. Areas that contain vapors from explosives will be considered Class I hazardous locations.

5.3.1.2. Areas in which explosive sublimation or condensation occur or may occur will be regarded as both Class I, Division 1 and Class II, Division 1.

5.3.1.3. Areas containing explosives dusts or explosives that may, through handling, produce dust capable of being dispersed in the atmosphere will be regarded as Class II, Division 1.

5.3.2. Some definitive drawings for explosives facilities may identify the presence of a hazardous location or require the installation of certain basic electrical equipment to meet NEC requirements.

5.4. Electrical Equipment in Hazardous Locations.

5.4.1. Installation of electrical equipment in hazardous locations involving explosives will comply with NEC requirements for the appropriate hazardous location class, group and division.

5.4.2. Equipment must be approved not only for the class of location, but also for the explosion properties of the specific gas, vapor, or dust that will be present.

5.4.3. Intrinsically safe equipment must be certified by a reputable testing organization such as Underwriters' Laboratories (UL). Such equipment must be used in accordance with the recommended environmental and operational conditions specified in the certification.

5.4.4. If the properties of an explosive are such that the NEC requirements for electrical equipment provide inadequate protection under prevailing conditions, use of any of the following approaches is acceptable:

5.4.4.1. Intrinsically safe equipment.

5.4.4.2. Purged or pressurized and suitably temperature-limited equipment.

5.4.4.3. Exclusion of electrical equipment from the hazardous atmosphere.

5.4.4.4. Isolation of equipment from the hazardous atmosphere by means of dust, vapor, or gas-free enclosures with surface temperatures positively maintained at safe levels.

5.4.5. Devices which provide "cold light" through chemical action are acceptable for use in any hazardous location.

5.5. Interior Surfaces in Class II Hazardous Locations.

5.5.1. Interior surfaces should be smooth, free from cracks and crevices, and have joints taped or sealed.

5.5.2. If painted, interior surfaces should be covered with a hard gloss paint that is easily cleaned.

5.5.3. Horizontal ledges which might hold dust will be avoided or beveled to prevent dust collection.

5.5.4. Cove bases at the junction of the walls and floor are recommended.

5.6. Hardware in Hazardous Locations. To reduce the risk of accidental ignition by spark, consider the operational conditions in any hazardous location before choosing and installing hardware. Certain hazards may be sufficient to warrant the use of materials that will reduce the possibility of sparking.

5.7. Static Electricity in Hazardous Locations. To minimize the risk of ignition of a flammable or combustible atmosphere in a hazardous location due to static electricity, the requirements of Section 5E will be met for all hazardous locations.

5.8. Ventilation in Hazardous Locations. Buildings with hazardous locations must comply with the following ventilation requirements:

5.8.1. Buildings where dust, fumes, or vapors (having explosive potential) are formed will be passively ventilated, usually at the source of the hazard.

5.8.2. Design ventilation systems so that they have adequate measures for minimizing (eliminating) static discharge, including measures applied during the activation of manual or automated ventilation systems.

5.8.3. Equip exhaust fans through which combustible dust or flammable vapor pass with nonferrous blades (or casting lined with nonferrous material) and approved motors.

5.8.4. Electrically bond and properly ground the entire ventilation system.

5.8.5. NFPA 91, *Standard for Exhaust Systems for Air Conveying of Vapors, Gases, Mists, and Noncombustible Particulate Solids*, may be used in the installation of such systems.

5.8.6. For buildings in which there is explosive dust, an air balance that gives a slight negative pressure within the building is required.

5.8.7. If air conditioning equipment is installed, it should be done as directed in the NFPA 90A, *Standard for Installation of Air-Conditioning and Ventilating Systems*, and NFPA 90B, *Standard for Installation of Warm Air Heating and Air-Conditioning Systems*. Exhaust systems will be cleaned thoroughly and serviced on a regular schedule. A log will be kept.

Section 5D—Electric Supply Systems

5.9. Electric Supply Systems. This paragraph does not apply to licensed explosives storage locations, and locations involving explosives operations which do not require explosives siting. For QD and fire protection separation requirements between explosives facilities and electric supply system components (see **paragraph 12.84**.). Electric lines serving explosives facilities, including shielded cabling, power cabling, and communication lines will be installed underground in metal conduit from a point at least 50 feet away from the facility.

5.9.1. The line side of the main disconnecting switch or circuit breaker must have surge suppression in accordance with UFC 3-520-01, *Interior Electrical Systems*, and any Engineering Technical Letters issued specifically for explosives areas.

5.9.2. Surge protection shall be included for all incoming conductors. The surge protection must include suppression at the entrance to the facility from each wire to ground. All other metallic utility lines and pipes must be electrically connected to the structural steel of the building prior to entering the facility.

5.10. Backup Power. An alternate source of power must be available for explosives operations where the lack of a continuous power supply may cause a fire or explosion, as determined by risk assessment (see Chapter 4).

Section 5E—Static Grounding and Bonding

5.11. Areas Requiring Static Grounding and Bonding Systems. See Section 7D for static grounding and bonding requirements during specific operations. Static grounding and bonding systems are required for:

5.11.1. Hazardous locations (see Section 5C).

5.11.2. Areas where EEDs are exposed.

5.11.3. Areas where exposed explosives are handled.

5.11.4. Areas where explosive components which incorporate an electrical initiating system are undergoing maintenance; assembly to, or disassembly from, an all-up-round (AUR) configuration; or electrical connection or disconnection.

5.11.5. Areas where electrically initiated munitions and explosive devices are undergoing maintenance and electrical test operations and the responsible engineering function has determined grounding is necessary. This will usually be documented in the specific item TO

5.11.6. Areas where explosives are loaded or unloaded on aircraft (unless exempted per paragraph 7.14.1 or 7.14.2).

5.12. Static Grounding and Bonding Requirements.

5.12.1. The method generally used to eliminate or reduce the hazard from static electricity is to provide an electrically continuous path to ground via ground wire, cable, or strap.

5.12.1.1. These grounds shall be one continuous ground wire, cable or strap. Short ground wires, cables, or straps should not be connected together to make a longer one.

5.12.1.2. Each ground wire, cable, strap shall be connected to the item and facility ground individually. Connecting multiple ground wires, cables, or straps to another ground wire, cable or strap connecting mechanism (alligator clip, clamp, etc.) should be avoided.

5.12.2. Static grounding bars or other grounding devices may be appropriate for some operations (see paragraph 7.13.1). Such grounding bars or devices will be located at the entrance to or within the area where work will be performed.

5.12.3. Wire used as a permanent static ground conductor should be large enough to withstand mechanical damage and must not be less than American Wire Gauge (AWG) No. 6 (or No. 8 for existing bonds), or a braided cable of equal resistance. Wires used as static grounds for portable or movable equipment, or for temporary static bonding cables, will be large enough to carry the expected current load as specified in the item technical data, but will not be smaller than AWG No. 12 (3/32-inch cable).

5.12.4. Static grounds will be bonded to the facility's grounding system. Static grounds will not be made to telephone grounds; electrical conduit systems; gas, steam, hot water, or air lines; sprinkler systems; or air terminals of lightning protection systems (connection to the "down wire" of the system at ground level is authorized).

5.12.5. When all of the objects are conductive, they can be grounded by electrically connecting all parts to a common ground conductor.

5.12.6. Partial grounding, or using conductors that are too weak or have too much resistance, may increase the static hazard by providing opportunities for discharge through an uncontrolled path to ground.

5.12.7. Electrical continuity may be broken by oil on bearings, paint, or rust at any contact point. To get a continuous circuit, grounding straps should be used to bridge such locations.

5.12.8. Equipment in contact with conductive floors or tabletops will not be considered grounded.

5.12.9. For explosive facilities, shielded cabling, power cabling, and communication lines must run underground in metal conduit for at least 15.24 meters (50 feet) prior to entering the structure. All other metallic utility lines and pipes, including steam, water, and air conditioning lines must be bonded to the lightning protection system just before they enter the building.

5.12.10. Electrically energized objects or tools will not be placed on grounded surfaces where explosives operations are conducted. If electrically energized objects or tools (heat sealers, heat guns, etc) are required for the operation, these shall be placed on a non-conductive surface to prevent continuity between the electrically energized object or tool and the grounded surface.

5.13. Permanent Static Grounding Systems.

5.13.1. A resistance of 25 Ohms or less is required from item connection to facility ground. In hazardous locations, resistance to ground of 10,000 Ohms or less for equipment static bonding straps is adequate to bleed off the static charges; continuity across bonds must be less than 1 Ohm.

5.13.2. In accordance with AFI 32-1065, *Grounding Systems*, all permanent static grounding systems shall be given a continuity test at the time of initial installation and at any time a lack of continuity is suspected due to damage or corrosion. A resistance reading of 25 Ohms or less must be obtained. Documentation of initial and recurring testing is required. Consider equipment (except a belt-driven machine) as a unit in testing of resistance to ground.

5.13.3. Hazardous locations:

5.13.3.1. Ground all conductive parts of equipment in accordance with the NEC.

5.13.3.2. Where the installation permits viewing, make a visual inspection of all static bonds and grounds for breaks and corroded connections before starting operations on each day the equipment is to be used. Test any suspected connections and bring them up to required standards before starting operations.

5.13.4. In non-hazardous locations, static bonding and grounding straps must be inspected visually for breaks and corroded connections quarterly in accordance with AFI 32-1065. Suspect connections will be tested for continuity, brought up to required standards, and re-tested before starting operations.

5.14. Temporary Static Grounding or Bonding Cables.

5.14.1. Temporary static grounding or bonding cables shall be given a continuity test at the time of their initial placement into service.

5.14.2. Prior to each subsequent use, the cable will be inspected for any evidence of corrosion or damage.

5.14.2.1. Replace the clamp if jaws are deformed, spring is weak, or other defect is noted that would prevent a good connection.

5.14.2.2. Replace the cable if more than one third of the cable strands are broken. Deteriorated or damaged plastic coating does not affect electrical capability of cables.

5.14.2.3. Perform a continuity test if a lack of continuity is suspected due to damage or corrosion or after any components have been replaced.

5.14.3. A resistance of 10 Ohms or less is required from inside one of the clamp jaws to inside the other clamp jaw.

5.14.4. Documentation of continuity testing on temporary static grounding or bonding cables is not required.

5.15. Static Grounding or Bonding Reels.

5.15.1. All installed static discharge reels shall be given a continuity test at the time of their initial installation.

5.15.2. Prior to each subsequent use, the static discharge reel will be visually inspected for security of mounting and evidence of any corrosion or damage. Perform a continuity test if a lack of continuity is suspected due to damage or corrosion or after any components have been replaced or repaired.

5.15.3. A resistance reading of 10 Ohms or less is required from inside the clamp jaw to the frame on which the reel is mounted.

5.15.4. The test will be accomplished by extending the entire length of the cable.

5.15.5. Documentation of continuity testing on temporary static grounding or bonding cables is not required.

5.16. Belting. If static electricity is a hazard, use non-static-producing belting which has a resistance to ground not exceeding 600,000 Ohms. This will include belt-driven compressors, conveyor belts, and so forth. In measuring the total resistance to ground for belt-driven machinery, do not count the resistance of the belting.

Section 5F—Conductive Floors

5.17. Areas Requiring Conductive Floors. Conductive floors may be required in hazardous locations and where certain exposed explosives and materials are sensitive (easily detonated or ignited) to the uncontrolled discharge of static electricity, and the requirements of Section 5E are deemed inadequate to protect from the hazards of static electricity. Dust-air mixtures of ammonium perchlorate, tetrytol, and dust of solid propellants are subject to static discharge and conductive flooring should be considered where they are present.

5.18. Requirements for Conductive Floors.

5.18.1. Conductive floors will be non-sparking.

5.18.2. Conductive floors will be smooth, free from cracks, and of a type that will not develop surface separations, wrinkle, or buckle under operational loads.

5.18.3. Where washing is required, conductive floors will be able to withstand repeated applications of hot water and cleaners.

5.18.4. Where conductive floors are required, table tops on which exposed explosives or dusts are encountered shall be conductive, or covered with a conductive material, meeting the same requirements as the conductive floor.

5.18.5. In small areas, conductive mats or runners can be suitable in lieu of conductive floors. Personnel (except electricians performing system checks), in places where conductive floors or coverings are required and installed, will wear conductive footwear (shoes or grounding straps).

5.18.6. Where conductive floors are required, the resistance between the ground and the wearer will not exceed 1,000,000 Ohms; that is, the total resistance of conductive footwear on a person, plus the resistance of floor to ground.

5.19. Testing and Maintenance of Conductive Floors.

5.19.1. Conductive floors will be tested when installed to ensure that design specifications are met, and at intervals thereafter as prescribed in AFI 32-1065. Test instruments will not

be used until all exposed explosives and explosives dusts, gases and vapors that are subject to possible ignition or initiation have been removed from the area.

5.19.2. Do not paint over conductive floors.

5.20. Testing and Maintenance of Conductive Footwear.

5.20.1. Test conductive footwear before each shift.

5.20.2. Conductive footwear requires care to ensure retention of its conductive properties.

5.20.2.1. When conductive footwear is not in use, it shall be stored in lockers close to the room where it will be worn; conductive footwear shall be donned at this same location.

5.20.2.2. Take precautions to prevent the accumulation of even a thin layer of dust or wax which can insulate conductive footwear from the floor.

5.20.2.3. Supervisors will ensure that conductive footwear are not altered so as to negate their safety features.

5.20.2.4. Only conductive materials will be used in their repair of conductive footwear. Conductive footwear will be cleaned thoroughly before being repaired.

Section 5G—Installed Systems and Equipment Grounds

5.21. Installed Systems and Equipment Grounds. Attention must be given to the installation and maintenance of electrical grounding where explosives are involved.

5.21.1. All grounding mediums must be bonded together.

5.21.2. If the structure is equipped with a lightning protection system, all grounds, including static grounds, must be interconnected as outlined in AFI 32-1065.

5.21.3. Grounding will be tested when installed to ensure that design specifications are met and at intervals thereafter as prescribed in AFI 32-1065. Document all tests and inspections on appropriate forms or automated products.

5.21.3.1. Before making any electrical continuity and resistance tests or electrical repairs, remove all exposed explosives, EEDs, and explosives dust, gases and vapors that are subject to initiation under the specific circumstances.

5.21.3.2. If there is an operating generator or energized transformer at the location, connect a shunt grounding strap before opening an installed grounding connection for repair or replacement.

Section 5H—Lightning Protection Systems

5.22. Facilities Requiring Lightning Protection Systems. Properly maintained lightning protection systems (LPS) are required for all explosives facilities (to include open locations), except as noted in paragraph 5.25. The DoD has selected the LPS criteria of NFPA 780, *Standard for the Installation of Lightning Protection Systems*, for AE facilities. If LPS test methods or designs other than prescribed in this section are used, they shall offer equivalent protection to those prescribed in this section and be approved via the explosives site plan.

5.23. Lightning Protection System Design. Design and installation of a LPS must meet, at a minimum, the requirements of AFI 32-1065, *Grounding Systems* and NFPA 780. The LPS must feature air terminals, down conductors, sideflash protection, surge suppression of data lines and bonding of all other conductive penetrations into the protected area, and earth electrode systems. Structural elements of the building may serve as air terminals, down conductors, or the earth electrode. The LPS must be designed to intercept lightning at a 100 ft or less striking distance arc in accordance with NFPA 780 (Note: The pitched roof requirements of NFPA 780 may not be used in lieu of this requirement).

5.23.1. **Air Terminals.** An air terminal is a component of an LPS that is able to safely intercept lightning strikes. Air terminals may include overhead wires or grids, vertical spikes, or a building's grounded structural elements. Air terminals must be capable of safely conducting the current from a lighting strike.

5.23.2. **Down Conductors.** Down conductors (flat or round) provide low impedance paths from the air terminals described above to the earth electrode (ground) system. Structural elements having a high current capacity and a low impedance to ground need not be augmented with wires. Where wires are used as down conductors, these shall meet the requirements of NFPA 780.

5.23.3. **General Sideflash Protection.** Protection from side flash is obtained either by bonding metallic objects to the down conductors or the earth electrode system, in accordance with NFPA 780, except as modified herein, or it is obtained by maintaining a separation distance between metallic objects and these LPS components.

5.23.3.1. Fences and railroad tracks located within six feet of a structure's LPS shall be bonded to the structure's LPS.

5.23.3.2. The reinforcing bars in adjacent structural elements must be joined in a manner to provide electrical bonding between the elements. This is an absolute requirement for facilities that are used to store AE. Techniques commonly used and approved in the construction industry to join reinforcing steel are acceptable for this purpose. The steel arch of an ECM must be similarly joined to the rebar in the floor.

5.23.4. **Sideflash Protection for Nuclear Weapons.** The Nuclear Weapon System Safety Group (NWSSG) adopted a standard sideflash separation distance value of 7-feet as a conservative baseline for nuclear safety critical operations. In the absence of any specific additional guidance due to location (see paragraph 5.23.4.2) or weapon configuration (see Table 5.1), the 7-foot value shall be the sideflash separation distance required. When weapons are in an operational configuration where no lightning sideflash separation distance is required, all other separation distance requirements not specifically related to lightning (i.e. for access, ventilation, inventory, etc.) are still applicable.

5.23.4.1. The sideflash protection requirements for all nuclear weapons, depending on their operational configuration, are listed in Table 5.1. The term "major maintenance" refers to the weapon configuration resulting from the disassembly or the performance of any maintenance operations, as currently approved, which could result in exposure of the weapon's internal components to electrical energy. Major maintenance does not include Permissive Action Link (PAL) procedures.

5.23.4.2. Location Considerations for Sideflash Separation Distance.

5.23.4.2.1. If operations are being performed inside a HAS or a PAS and these operations include weapon configurations that require a separation distance (see Table 5.1), then:

5.23.4.2.1.1. When using an LPS modified Weapons Maintenance Truck (WMT), no minimum sideflash separation distance is required between the WMT and the HAS/PAS provided all additional safety requirements are adhered to in accordance with TO 11N-50-1007, *Transportation Maintenance System Operator/User Manual A/S32U-42 and A/S32U-43*, including any separation distance requirements between the weapon and the inside walls of the WMT. (See paragraph 5.23.4.3 for proper application of separation distance).

5.23.4.2.1.2. When no WMT is being used, a minimum sideflash separation distance of 7-feet is required between the weapon and the HAS/PAS. (See **paragraph 5.23.4.3** for proper application of separation distance).

5.23.4.2.2. If operations are being performed at any location other than in a HAS or a PAS and these operations include weapon configurations that require a separation distance (see Table 5.1), then a minimum sideflash separation distance of 7-feet is required between the weapon and facility. (See paragraph 5.23.4.3 for proper application of separation distance).

5.23.4.2.3. The standard separation distance of 7-feet may be reduced by determining the specific sideflash separation value for a particular facility.

5.23.4.2.3.1. Sideflash separation distance reduction shall be based on Faraday shield impedance characterization testing and the adequate bonding and appropriate installation of surge suppression using a methodology approved by AFSC/SEW prior to implementation.

5.23.4.2.3.2. Documentation of the bonding and surge suppression configuration, including the associated separation distance calculations, in an attachment to the explosives site plan, must accompany the characterization test results for formal review and approval by AFSC/SEW before an exception to the 7-foot standard separation distance is granted. Changes to the bonding and surge suppression configuration must be submitted to AFSC/SEW for approval prior to implementation.

5.23.4.2.3.3. Faraday shield characterization and implementation methodologies must include specific maintenance and inspection procedures. Until AFI 32-1065 is updated to specifically address Faraday shield sideflash protection devices, maintenance and inspection of approved systems will comply with the following requirements.

5.23.4.2.3.3.1. Bonds and surge suppressors shall be visually inspected as a minimum every six months to validate the installation and serviceability. Additionally, a visual inspection shall be performed of all surge suppression devices when a lightning strike occurs to the facility.

5.23.4.2.3.3.2. Electrical resistance measurements of bonds shall be taken, as a minimum, once every two years. Such measurements are also required

when the facility is subjected to an earthquake, tornado, flood, or other such acts of nature that could have affected the integrity of the bonds; and any time modification, maintenance or repair to the structure, penetration or any LPS component requires the bond or connection to be broken. The bond resistance should be less than 1 Ohm. Larger readings require tightening or reattaching of the bonds.

5.23.4.2.3.3.3. Transfer impedance measurements, as determined by Faraday shielding characterization testing, shall be taken, as a minimum, once every ten years.

5.23.4.2.3.3.4. A record of all resistance or transfer impedance measurements at all required points and of visual inspections shall be maintained for at least six inspection and testing cycles.

5.23.4.2.3.4. The measures taken to implement a Faraday shield approach for reducing the required lightning sideflash separation distance in a particular facility do not impact, adversely effect or relieve the requirements to maintain a conventional LPS as described in Section 5H and the current version of AFI 32-1065 (1 Oct 98).

5.23.4.3. The required safe separation distance is properly applied to an item (weapon, WMT, etc.) to be protected from lightning sideflash by maintaining a minimum free space separation of the specified distance between the item and the facility's walls, ceiling, or any other structural member capable of conducting electrical energy (e.g. steel columns, rebar-reinforced interior walls, columns or beams).

5.23.4.3.1. Objects in the floor such as concrete rebar, floor grounds, and structural members of the Weapons Storage Vault (WSV) (when the vault is in a full down position) do not require the application of the sideflash separation distance.

5.23.4.3.2. If an ungrounded metallic conductor is located within the safe separation distance of the item being protected, then the shortest free space distance measured between the metallic conductor and any structural member capable of conducting electrical energy shall be at least equal to the full separation distance (7' default) minus the shortest free space distance measured between the metallic conductor and the item being protected.

5.23.4.3.3. Transient or temporary infringement of the sideflash separation distance requirement (e.g. the movement of personnel through the facility or the requirement to use an overhead crane in the course of approved maintenance procedures) can be permitted. These actions shall be avoided whenever possible or their duration shall be minimized while still allowing required maintenance operations to be safely completed. These violations are not justified by issues of convenience or for the sole purpose of ease of operations.

5.23.4.4. Deviations from paragraph 5.23.4 must be approved by AFSC/SEW (see paragraph 1.4.1)

5.23.5. **Surge Protection for Incoming Conductors.** A LPS shall include surge protection for all incoming conductors. The surge protection must include suppression at the entrance

to the building from each wire to ground. Shielded cabling, power cabling, and communication lines shall be buried underground in metal conduit for a minimum of 50 feet before entering the structure. All other metallic utility lines and pipes must be electrically connected to the LPS or the structural steel of the building just before they enter the building.

5.23.5. **(ACC)** Include a surge protection compliance statement with ESPs.

5.23.6. **Earth Electrode System.** Earth electrode systems dissipate the current from a lightning strike to ground. Earth electrode systems may be concrete encased electrodes, ground loop conductors, radials, grounding rods, ground plates, a conductor immersed in nearby salt water, chemical grounds that are installed for the purpose of providing electrical contact with the earth, or combinations of these.

5.23.7. **Underground Storage Facility.** An underground storage site requires protection against lightning only for exposed or partially exposed parts. Lightning protection requirements will be considered on a site specific basis.

5.24. Lightning Protection System Inspection, Maintenance, Testing, and Training. LPS must meet, at a minimum, the requirements of AFI 32-1065 and NFPA 780. Maintenance shall be performed to ensure that the integrity of the LPS conforms with the criteria of NFPA 780 and AFI 32-1065.

5.24.1. **Visual inspection.** The LPS will be periodically inspected as prescribed in AFI 32-1065.

5.24.2. **Electrical tests.** The LPS shall be periodically tested electrically as specified below and as prescribed in AFI 32-1065.

5.24.2.1. Bonding (resistance) tests shall be conducted periodically (or after facility modification that may affect bonding). A maximum resistance value of one Ohm is permitted across all bonds.

5.24.2.2. Resistance to earth tests of LPS will be conducted periodically during the same season of the year (or after facility modification that may have affected the system). The maximum resistance to earth shall not exceed 25 ohms.

5.24.3. **Records and Data.** Records and test measurement data of resistance to earth tests and bonding tests shall be kept on file for the last six inspection cycles. These records shall be reviewed for trend analysis as prescribed in AFI 32-1065.116

5.24.3. **(ACC)** Records will document all information as listed in AFI 32-1065 para 4.1.

5.24.4. **Training.** Personnel responsible for maintenance, inspection and testing must be familiar with the fundamentals described in NFPA 780 and this section as they relate to explosives facilities to ensure inspection and test requirements above are met. See AFI 32-1065 for specific training requirements.

5.25. Lightning Protection System Exceptions. Properly maintained LPS are required for explosives facilities, with the following exceptions:

5.25.1. Air terminal systems are not required on a HAS, a PAS, a metal aircraft shelter, or an earth covered magazine, provided:

5.25.1.1. All reinforcing steel in the walls and floors are properly bonded and grounded.

5.25.1.2. Metal ventilators at least 0.188 (3/16) inches thick are grounded.

5.25.1.3. Metal ventilators less than 0.188 (3/16) inches thick are protected by an air terminal.

5.25.1.4. Down conductor, sideflash protection, surge suppression, and earth electrode system requirements of paragraph 5.23 are met.

5.25.2. A LPS is not required for licensed explosives storage locations outside the explosives storage area but situated in buildings primarily used for other purposes and that have relatively small quantities of explosives. (Note: This exemption is made because of the explosives; other contents of the building may require a LPS.)

5.25.3. A LPS is not required for locations involving explosives operations which do not require explosives siting. (Note: This exemption is made because of the explosives; other items at this location may require a LPS.)

5.25.4. An "integral" LPS is not required for an all-metal building that has been shown to meet the additional criteria of a "metallic cage" system, as both are defined in NFPA 780. This exception must be approved by AFSC/SEW prior to operational use of the building in this configuration (see **paragraph 1.4**).

5.25.5. The following locations do not require a LPS provided that the responsible commander accepts the loss of resources and structure and any potential collateral damage to other nearby exposures. The commander's risk acceptance must be documented by letter (i.e., signed by the commander stating he/she understands and accepts the potential loss of resources and structures at the location without LPS and any potential collateral damage to other nearby exposures) and this letter must be submitted with the explosives site plan.

5.25.5.1. Explosives locations served by a local lightning warning system to permit the controlled termination of operations at the issuance of a *Lightning Watch* and immediate personnel protection actions at the issuance of a *Lightning Warning* as prescribed in Section 7H.

5.25.5.2. Facilities containing only ammunition or explosives that cannot be initiated by lightning, as determined by AFSC/SEW and approved by DDESB, and where no fire hazard exists.

5.25.5.3. Facilities where personnel are not expected to sustain injury and at the same time, the resulting economic loss of the structure, its contents and/or surrounding facilities is minimal.

5.25.5.4. Facilities used for temporary (non-recurring) storage of munitions.

5.25.5.5. Structures, facilities, or mobile equipment housing explosives or explosives operations not regularly situated at a fixed location.

5.25.5.6. Structures and facilities limited to the storage or handling of small arms ammunition where the value of the ammunition is $10,000 or less.

5.25.5.7. Lightning protection systems may be omitted on EOD intentional detonation and proficiency training ranges, and holding areas sited within the range boundary. A commander's risk acceptance memo is not required. Apply the requirements set forth in paragraph 5.25.5.1.

5.25.6. Lightning protection systems may be omitted on flightline PESs if the system interferes with flightline criteria contained in UFC 3-260-01, Airfield and Heliport Planning and Design. A commander's risk acceptance is not required. See Section 7H for procedures in the event of electrical storms.

5.25.7. Large catenary systems that cannot conform to the bonding distances calculated from the equations provided in AFI 32-1065 shall be considered under the provision in paragraph 5.22. Engineering analyses shall be provided to ensure variances provide equivalent protection prior to submission to the DDESB for approval.

5.25.8. ECMs that constitute a metallic cage, as defined in NFPA 780, and that do not contain any energized or unbounded metallic penetrations, do not require earth resistance testing.

Section 5I—General Design Considerations for Explosives Facilities

5.26. Blowout-type Construction. Roofs and walls of explosives facilities should be as light in weight (weak) as practicable. Design facility features (e.g. roofs, walls, blow-out panels) to allow venting of an internal explosion with the minimum number of large fragments. Avoid installing hardware (including pipes and ducts) on light blowout-type walls, roofs or panels; if unavoidable, select materials or items that will not yield heavy fragments in an explosion. The use of frangible panels should be considered in the design of HD 1.3 facilities where high overpressures from a detonation or a confined deflagration are expected (see HNDED-CS-93-7, *Hazard Division 1.3 Passive Structural Systems Design Guide*). Exceptions to this paragraph are made where design requirements such as the following must be met: fire walls, substantial dividing walls, special roof loading, external overpressure protection, and specialized manufacturing facilities. This paragraph does not apply to licensed explosives storage locations, and locations involving explosives operations which do not require explosives siting.

5.27. Non-combustible Construction. Construct exterior walls and roof coverings of explosives building out of non-combustible materials. Non-combustible material will be used for interior surfaces of explosives buildings (see UFC 3-600-01, *Fire Protection Engineering for Facilities*. If it is necessary to use combustion-supporting materials in the interior of an explosives building, treat or cover all exposed surfaces with fire-retardant material. This paragraph does not apply to licensed explosives storage locations, and locations involving explosives operations which do not require explosives siting.

5.28. Underground Explosives Storage Facilities. All wiring and electrical equipment in underground storage facilities will, in addition to any other requirements of this chapter, be of moisture and corrosion resistant materials and construction unless a site specific analysis indicates that such construction is not necessary. Underground facilities must have emergency lighting systems to provide minimum illumination in the event of a power failure.

5.29. Outdoor Explosives Storage Sites. This paragraph does not apply to licensed explosives storage locations, and locations involving explosives operations which do not require explosives siting.

5.29.1. Outdoor explosives storage sites will have a minimal slope, be well drained, and free from unnecessary combustible materials.

5.29.2. Adequate dunnage is needed, especially between the stack and an unimproved surface to ensure stack stability. The dunnage, supporting timbers, or platform on which explosives are stored will be built and placed to prevent falling, sagging, or shifting of the explosives. See specific item TOs.

5.29.3. Nonflammable or fire-resistant, waterproofed, overhead covers will be provided for packaged explosive items unless the item is contained in packing designed and approved for unprotected outside storage. There must be at least 18 inches between the top of the stack and the cover. If airspace is kept between the cover and the stacks, the sides of covered stacks may be protected by nonflammable or fire-resistant, waterproof covers.

5.30. Stairways. Stairways will conform with Air Force Occupational Safety and Health (AFOSH) standards and NFPA 101, *Life Safety Code* requirements. Open-sided stairways in an explosives building (or in one where a dangerous fire hazard exists) must have handrails at least 42 inches high. They must have mid-railings to preclude falls when vision might be impaired by smoke, injury or when panic might result. Open risers should be avoided.

5.31. Fixed Ladders. Fixed ladders should conform to the American National Standards Institute (ANSI) Safety Code A14.3, *Ladders – Fixed – Safety Requirements*, and AFOSH standards.

5.32. Platforms, Runways, and Railings. Platforms, runways, and railings should conform with AFOSH requirements.

5.32.1. Platforms and runways less than 30 feet long require one stairway or fixed ladder. Those over 30 feet long or more than 250 square feet in area require two stairways or ladders.

5.32.2. Platforms, floor openings, runways, tanks, or open vats comply with AFOSH 91-501, *Air Force Consolidated Occupational Safety Standard*.

5.32.3. Permanent railings should be of metal except in those process buildings where metal railings would increase the hazard.

5.33. Passageways. If weather-protected passageways (ramps) are needed between buildings or magazines, they should have suitable fire stops between the buildings.

5.34. Walkways. Walkways at the entrances to or between adjacent operating buildings containing explosives will be hard surfaced or boardwalks. These walkways should be kept free from foreign material. Foot brushes, door mats, or scrapers should be provided at the entrance of each building, except magazines. Special attention will be given to passageways, walkways, and stairs which have been subjected to the effects of inclement weather.

5.35. Roads. This paragraph does not apply to licensed explosives storage locations, and locations involving explosives operations which do not require explosives siting, unless they are located within an explosives storage area.

5.35.1. Good all-weather roads should be provided to, and within, the explosives area.

5.35.2. Road systems serving groups of magazines or explosives buildings will be arranged without dead ends so that motor vehicles carrying explosives cannot be isolated. To prevent dead ending, interconnecting roads for magazine service roads need only be passable trails adequate to accommodate the typical vehicles used at the installation.

5.35.3. Roads serving a single magazine or explosives processing building (including its service facilities) may dead end at the magazine or building. The road system should be designed to eliminate the need for passing through an intermediate explosives area when traveling between one operating area and another, within the same explosives storage area.

5.36. Gates. There is no mandatory safety requirement for more than one personnel gate in the fence around an explosives area. Weapons Safety, Security and Civil Engineering usually determine how many gates are needed after considering all elements of the situation. Consideration should be given to providing alternate personnel gates for a single event emergency. This paragraph does not apply to licensed explosives storage locations, and locations involving explosives operations which do not require explosives siting. Consider alternate ways of evacuating an explosives area based on where explosives events may occur.

5.37. Drainage. Provide adequate drainage for access and internal roads and all explosives locations. Provide magazines with condensation drainage from the storage facility interiors. This paragraph does not apply to licensed explosives storage locations, and locations involving explosives operations which do not require explosives siting.

5.38. Drains and Sumps. The following requirements apply to facilities which handle liquid explosives or liquids containing explosive waste:

5.38.1. When lines are required for draining liquid explosives or liquids containing explosive waste, they will be free of pockets and low spots. The drain line will be sloped at least one quarter inch per foot so that explosives will not settle in the drain line. The drain system will include a sump or basin so explosives can be removed.

5.38.2. Bolted sump tanks or other types of construction that allow the explosives to settle in obscure or hidden spaces are prohibited. Avoid any deposition of explosives from sump effluent due to drying, temperature changes, or interaction with other industrial contamination. Use sweeping and other dry-collecting measures to keep explosives which are appreciably soluble in water out of the drainage system.

5.38.3. Sumps will be designed so that suspended and solid explosive material that may settle cannot be carried in the wash waters beyond the sumps. They will be constructed so that the overflow will not disturb any floating solids. The design will allow enough settling time, based on the settling rate of the material and the usual rate of flow. It will allow the collected explosives to be removed easily and allow those which float on water to be retained until they can be skimmed from the water surface.

5.38.4. In all new construction, drains between the source of explosives and the sump will be troughs with rounded bottoms. The drains will have removable, non-sparking, ventilated covers for ease of inspection for accumulated explosives. Waste liquids will not be run into closed drains and sewers.

5.38.5. Drains will be inspected periodically and steps taken to prevent the buildup of explosive deposits. Drains and sewers containing explosive waste will not be connected to the normal sewage systems. All residue from hazardous material clean-up operations is considered hazardous waste and shall be disposed in accordance with AFI 32-7045, *Environmental Compliance Assessment And Management Program (ECAMP)* and AFPD 32-30, *Explosive Ordnance Disposal*.

5.39. Tunnels. Tunnels must be drained, ventilated, well lighted, and have at least two exits. Water and steam service lines in tunnels will be lagged with suitable insulation. Tunnels between buildings that contain explosives will be built to resist the shock wave and blast of an explosion (see DoD 6055.09-M, *DoD Ammunition and Explosives Safety Standards*, for design guidance). Only authorized personnel will enter the tunnels.

5.40. Laundries. Laundries for washing uniforms and rags that are contaminated with explosives must comply with the following requirements:

5.40.1. The laundry will include a safe place to store uniforms and rags that are contaminated with explosives before washing. Sumps will also be provided to remove explosives from waste water. There should be facilities available to test whether the contaminant (particularly any insoluble toxic substance) has been removed. Contact Environmental Management for assistance.

5.40.2. Commercial businesses laundering such articles will be informed of the nature of the explosives contamination and possible dangerous chemical reactions.

5.41. Steam for Explosives Processing or Facility Heating. This paragraph does not apply to licensed explosives storage locations, and locations involving explosives operations which do not require explosives siting.

5.41.1. Steam used to heat buildings that contain explosives must not exceed 228 ^{o}F. Process steam may exceed this if necessary but will not exceed 250 ^{o}F (121 C). (Process steam is steam that is in direct contact with explosives or which, in case of equipment failure, would exhaust directly into contact with explosives or explosive fumes.) However, for TNT specifically, the maximum temperature allowed for processing is 240 ^{o}F.

5.41.2. Steam or hot water pipe surfaces in contact with wood, paper, or other combustible materials must never be hotter than 160 ^{o}F. If the hot water pipes and the steam lines are hotter than this, they must be covered and painted with an impervious material or otherwise protected against direct or prolonged contact with these items.

5.41.3. Where a reducing valve is used, a relief valve should be installed on the low pressure piping. The production of superheated steam caused by the throttling action of reducing valves will be prevented by positive means, preferably by using a “water leg” or water column to control steam pressure of 5 psi or less.

5.41.4. Where close control of steam temperature is needed, indicating and recording pressure or temperature gauges should be installed. Such devices should be periodically tested and the test results recorded.

5.41.5. Where circulating hot water is used for heating, the installation and operating conditions will conform to AFI 32-1068, *Heating Systems And Unfired Pressure Vessels.*

5.41.6. In explosives handling or storage locations where resistance to ground is high, steam or hot water lines should be grounded where they enter buildings.

5.41.7. A hot work permit is required to use any equipment exceeding 228° F in a building containing explosives.

5.42. Magazine Ventilation and Vermin-Resistance.

5.42.1. Provide magazines with appropriate means of air circulation or dehumidification, when required by civil engineering, logistics, or health directives. (Note: Do not install ventilators in 3- or 7-bar rated earth-covered magazine designs unless allowed by the DDESB-approved definitive design drawing to ensure the ECM's strength rating is not affected.

5.42.2. Magazine vents (when installed or repaired) must prevent the entry of sparks and burning embers, or have fusible links to close the vents when an outside fire threatens the magazine. Where fusible links are installed, leave unpainted, and ensure they are serviceable, properly installed, and rated for a maximum temperature of 155° F to 165° F (68.3^{o} C to 73.8^{o} C) NSN 4210-00-033-6032 or suitable substitute. Existing magazine vents that do not prevent the entry of sparks and burning embers may continue to be used until repaired or replaced; however, it is strongly recommended that these vents be evaluated by civil engineering (base fire marshal or designate) for their ability to prevent the entry of sparks and burning embers.

5.42.3. Provide magazines with vermin resistance, when required by civil engineering, logistics, or health directives.

Section 5J—Emergency Exits for Explosives Buildings

5.43. General. Use the ANSI Safety Code A156.3, *Building Exits*, and NFPA 101 as a guide in constructing emergency exits and fire escapes.

5.43.1. Exterior fire escapes from a building with two or more stories must be of non-combustible material. They should be separated from the interior of the building by fire-resistant walls.

5.43.2. Fire escape stairs will be arranged so they are exposed to the smallest number of window and door openings. All openings will be protected as required by the NFPA 101.

5.43.3. Fire walls are designed to limit the spread of fire to only one zone of a facility. They are normally extended through the roof of the building to prevent a fire on one side of the fire wall from immediately spreading to the remainder of the facility. Construct proposed fire walls as prescribed in UFC 3-600-01, *Fire Protection Engineering for Facilities*. Protect any openings through the fire wall as described in the NFPA 80, *Standard for Fire Doors and Other Opening Protectives*, and NFPA 221, *Standard for Fire Walls and Fire Barrier Walls*.

5.44. Building Exits.

5.44.1. One properly located exit is suitable for small operating rooms or cubicles which have substantial dividing walls on three sides.

5.44.2. In larger buildings or rooms, at least two exits remote from each other (regardless of dimensions), will be provided for each operating room or building containing explosives.

5.44.3. If more than eight persons are occupying a room containing explosives, it should have more than one exit or one exit for each multiple of five persons (or fraction thereof). Coordinate with the installation's Ground Safety (SEG) and Fire Marshall for the number of exits required based on occupancy.

5.44.4. Exits shall be at least 32 inches wide by 80 inches high. However, in determining the total number of exits required, available space (in multiples of 32 inches of width) may be considered additional exit units. Exits should be spaced equally about the perimeter of the building. Refer to NFPA 101, *Life Safety Code*, paragraph 7.2.1.2.3.2, for exceptions to the 32 inch width.

5.44.5. Exits shall be in accordance with NFPA 101. Exits should lead directly outside. Plan each exit to avoid obstructing the escape of personnel. Do not place explosives, equipment, and operating materials between personnel and exits.

5.45. Exit Doors.

5.45.1. ECM doors are not authorized for new construction projects used as operating locations or for existing ECMs converted to use as operating locations. Existing operating locations using ECM doors may be grandfathered if the ESP has been formerly approved by the DDESB or AFSC.

5.45.2. Exit doors in operating buildings will open outward.

5.45.3. During operating hours, exit doors may be fastened with dead-bolt panic hardware that cannot be operated from the outside.

5.45.4. Exit doors shall never be less than 32 inches (refer to NFPA 101, *Life Safety Code*, paragraph 7.2.1.2.4 for exceptions to the 32 inch width) by 80 inches high.

5.45.5. Do not obstruct exit doors or departure routes.

5.45.6. Exit doors should be panel or flush surface type construction except for existing storage magazines already approved by AFSC or DDESB.

5.45.7. Vision panels in each door are desirable. The using agency may omit them for security. Vision panels should be in the upper half of the door, not exceed 100 square inches, and glazed with acrylic plastic or equivalent material. They should be of shatter resistant, non-combustible material or slow-burning material of a type that is practically smokeless. The requirements of Section 5B do not apply to vision panels in exit doors.

5.46. Safety Chutes. Safety chutes will be provided as exits from multistory hazardous locations where rapid egress is vital and cannot be otherwise provided.

5.46.1. Supporting members for safety chutes should be made of non-combustible materials and anchored to structural members designed to provide resistance to the effects of an explosion or fire.

5.46.2. These chutes must be provided for work levels above the ground floor. They should be placed on opposite sides of the operation (so that people will not be trapped by a fire between them and a single chute).

5.46.3. Exits to safety chutes will open on a platform at least 3 feet square, equipped with guardrails. The chutes will begin at the outside edge of the platform.

5.46.4. Landings from safety chutes should be located where escape routes will be free from tripping hazards, low guy lines, drains, ditches, or other obstructions.

5.46.5. A manual or automatic tripping device should be installed at or near the entrance to chutes to give an alarm in the operating building and nearby structures. This tripping device may also actuate deluge valves and water curtains in the building or room affected.

5.46.6. Recommended safety chute dimensions and construction are: angle, 40-50 degrees with the horizontal; depth of chute, 24 inches; radius at bottom of chute, 12 inches. The lower end of the chute will not be over 24 inches above the ground. It will have enough of a horizontal run to prevent an injury to the employee because of the rate of fall (induced speed) during the exit.

5.46.6.1. Chutes 40 feet long require 6 feet of horizontal run.

5.46.6.2. The juncture of sections will be well-rounded and must overlap in the direction of travel.

Section 5K—Explosive Dust Collection Systems

5.47. Vacuum Collection. Vacuum (aspirator) systems with a wet-type collector that moistens explosive dust close to the point of origin and keeps it wet until the dust is removed for disposal are preferred. However, some dusts, (e.g., Explosive D) should be collected in a dry-type system.

5.47.1. Vacuum systems must be arranged so each type of explosive is collected separately or so dissimilar hazards (for example, black powder with lead azide) are not mixed.

5.47.2. Provision should be made for the proper liberation of gases that may be formed in a vacuum system.

5.47.3. Vacuum systems used to collect more sensitive explosives (such as black powder, lead azide, mercury fulminate, tracer, igniter, incendiary compositions, and pyrotechnic materials) should be used only for operations with fuzes, detonators, small arms ammunition, and black powder igniters. Wet-type collectors are required, with a compatible wetting agent close to the point of intake.

5.48. Location of Dry-Type Collection Chambers.

5.48.1. Stationary dry-type collection chambers should be located outside of operating buildings, in the open or in a separate building used exclusively for collection chamber.

5.48.1.1. There must be a protective barrier [e.g. operational shield, barricade, SDW] between the operating building and the outside location or separate building where the vacuum collection chamber is placed.

5.48.1.1.1. If the chamber contains 25 pounds of explosives or less, the protective barrier will be located at least 8 feet from the operating building.

5.48.1.2. If the chamber contains more than 25 pounds of explosives, the protective barrier will be separated from the operating building by a minimum of intraline distance based on the quantity of explosives in the chamber.

5.48.1.3. When it is not practicable to locate dry-type vacuum collection chambers outside the operating building, a separate room within the building may be set aside for the purpose. This room must not contain other operations and never be used as a

communicating corridor or passageway between other operating locations within the building when explosives are being collected. If more than one collection chamber is to be placed in the room, the room will be subdivided into cubicles separated by SDWs. Not more than one collection chamber will be in a single cubicle.

5.48.2. Portable dry-type vacuum collectors will not be placed in a bay or cubicle where explosives are present. If they do not contain more than five pounds of explosives, they may be placed outside the building or in a separate cubicle with SDWs. If they contain more than five pounds, the requirement for stationary collectors will be met.

5.49. Location of Wet-Type Collection Chambers. If stationary and portable wet-type collection chambers do not contain more than five pounds of explosives, they may be placed in operating bays or cubicles. If placed in separate cubicles, the limits for each one may be 15 pounds. If they contain more than 15 pounds, the location requirements for dry-type collectors will apply.

5.50. Design and Operation of Collection Systems.

5.50.1. The entire system will be electrically grounded and the grounds tested semiannually.

5.50.2. The system will be designed so that metal parts do not pinch explosives or explosive dusts.

5.50.3. Pipes or tubes through which the dust travels should have flanged, welded, or rubber connections. Threaded connections are not allowed.

5.50.4. The system will be designed to reduce accumulation of explosive dust in parts other than the collection chamber.

5.50.5. Long radius turns (centerline radius at least four times the diameter of the duct) will be used in the duct work.

5.50.6. The number of points of application of vacuum should be kept to a minimum.

5.50.7. Each room requiring vacuum collection should have a separate exhaust line to the primary collection chamber. No more than two bays will be serviced by a common leader to the primary collection chamber.

5.50.8. The vacuum line should be as short as possible from points of application of vacuum to the wet collectors.

5.50.9. The number of wet primary collectors serviced by a single secondary collector should be kept at a minimum. Not more than two dry primary collectors should be connected to a single secondary collector (wet or dry-type).

5.50.10. If an operation does not create an airborne concentration of dust, a manually operated suction hose to remove explosive dust is preferred.

5.50.11. Manually operated hoses should not be connected to explosive dust-producing machines. A permanent attachment increases the risk of propagation through the collection system should a detonation occur at the dust-producing machine.

5.50.12. In dry vacuum collection systems, two collection chambers should be installed in series, ahead of the pump or exhaust.

5.50.13. Wet collectors must provide for immersion of explosives to break up air bubbles, to release airborne particles, and to remove airborne moisture before it leaves the collector. This will keep moistened particles of explosives from entering the small piping between the collector and the exhaust or pump.

5.50.14. Explosive dust will be removed from the collection chamber at least once each shift to eliminate unnecessary and hazardous concentrations of explosives. The entire system should be cleaned weekly, dismantling the parts if necessary.

Section 5L—Water Supply and Fire Suppression Systems for Explosives Facilities

5.51. Water Supply for Explosives Manufacturing Areas and Loading Plants. An outside, underground, looped system of mains should be installed. The water distribution system will meet the requirements of UFC 3-600-01 and the NFPA 1142, *Standard on Water Supplies for Suburban and Rural Fire Fighting*. Mains will be valved properly and will not extend under explosives locations.

5.52. Automatic Sprinkler Systems.

5.52.1. Certain buildings in explosives manufacturing, surveillance, and inspection or ammunition workshop areas (for example, the receiving building in a load line) may require automatic sprinkler systems. The proper system must be determined by engineering studies of the hazards involved. Each system must be equipped with an audible warning device to alert personnel. Sprinkler systems in each building must be connected into the central alarm location. Sprinkler systems will be installed as prescribed in UFC 3-600-01.

5.52.2. When explosives facilities are placarded for "Apply No Water", automatic sprinkler systems will only be disabled after a risk assessment has been accomplished/approved by the local fire chief. If the risk assessment indicates the continued use of the automatic system is appropriate (e.g. to keep a potential fire from reaching the explosives items), the presence of the "Apply No Water" and an operable automatic sprinkler system does not constitute a violation of this standard. In all cases, the audible warning device must remain operable.

5.53. Deluge Systems. Machinery or operations in which there is a process fire hazard will have an auto deluge system as required by an engineering study.

5.53.1. Quick-acting sensors such as ultraviolet detectors will be used. In addition, hand-operated, quick-acting deluge control equipment should be provided.

5.53.2. Control devices used should be actuated by rate of rise, fixed temperature, or their combination, as appropriate. If the system contains electrical components, the controls will be placed in enclosures approved by the NEC.

5.53.3. Deluge systems should be charged with steam, water, or chemicals. This depends on the expected character of the fire to be controlled, as determined by engineering studies of the hazards and NFPA 13, Standard for the *Installation of Sprinkler Systems*, and NFPA 16, *Standard for the Installation of Foam-Water Sprinkler and Foam-Water Spray Systems.*

5.53.4. If there are two or more deluge systems in the same fire area, supply mains and the arrangements and size of the system riser will provide each system with the required quantities of water per head.

5.53.5. A device will be installed on the supply side of the system so that it will actuate an audible warning device in affected operating areas when the pressure fails.

5.53.6. Operations protected by a deluge system should be stopped immediately if the system fails and should not be resumed until adequate protection is provided.

Section 5M—Monitoring of Design and Construction of Explosives Facilities

5.54. Monitoring of Design of Explosives Facilities. Weapons Safety and Civil Engineering shall jointly ensure the design requirements of this chapter, and Chapters 4 and 6, are properly incorporated into design specifications (to include the statement of work when design and construction effort is being contracted) and as-built drawings for new explosives facilities. Additionally, those requirements that apply to nuclear weapon storage, maintenance, and handling facilities as defined in AFMAN 91-118, Safety Design and Evaluation Criteria for Nuclear Weapon Systems, must also be addressed in construction planning of new facilities for these purposes.

5.55. Monitoring of Construction of Explosives Facilities. In regards to the actual construction of explosives facilities, Weapons Safety and Civil Engineering shall jointly:

5.55.1. Ensure compliance with the final approved construction drawings with regard to design requirements driven by explosives safety considerations.

5.55.2. Ensure any changes that affect explosives safety considerations are reflected on the as-built drawings and the explosives site plan updated if necessary.

5.55.3. Ensure that the actual construction location of sited explosives facilities complies with the approved explosives site plan.

5.55.4. Ensure temporary construction workers are provided protection from explosives in nearby facilities as required in paragraph 12.17.11.

5.55.5. Ensure explosives in nearby facilities are protected from temporary construction operations. Consideration should be given to fire hazards and radio frequency (RF) hazards.

Section 5N—Maintenance and Repair of Explosives Facilities and Equipment

5.56. Removal of Explosives. Supervisory and weapons safety personnel will determine, based on a risk assessment (see Chapter 4), whether explosives must be removed prior to performing maintenance and repair of explosives facilities, or maintenance and repair of equipment in explosives facilities.

5.56.1. Only perform maintenance and repair in the interior of an ECM that contains bulk explosives if the explosives are physically protected and a risk assessment (see Chapter 4) shows that hazards to the explosives can be adequately controlled.

5.56.2. Because electricians are not allowed to work on live electrical equipment while wearing conductive shoes, remove all explosives from areas with conductive floors before proceeding with the electrical work.

5.57. Requirements for Maintenance and Repair With Explosives Present.

5.57.1. Brief maintenance personnel on the hazards involved and precautions needed to perform the work safely, and actions to take in the event of an accident. This includes self-help projects.

5.57.2. If hazards warrant, trained weapons safety personnel must monitor repair activities for safety. The monitor will halt repair activities when, in his or her opinion, hazards are being created. The senior supervisor of the facility will resolve the problem before resuming operations.

5.57.3. Keep the floor clean and free of extraneous materials and equipment in the immediate work area.

5.57.4. **Hot Work.**

5.57.4.1. Don't use flame or heat-producing equipment inside the facility unless facility contents are protected from the flame, sparks and heat by physical separation or shielding.

5.57.4.2. Keep flame or heat-producing equipment used outside the facility as far as practicable from all explosives (to include explosives in nearby facilities). When needed, use baffles and screens to confine sparks and flames.

5.57.4.3. Meet applicable requirements of AFOSH Standard 91-5, *Welding, Cutting, and Brazing***.**

5.57.4.4. Notify the fire department before work begins.

5.57.5. Maintenance personnel must wear conductive footwear in areas with conductive floors.

5.57.6. Ensure RF hazards presented by maintenance and repair operations are evaluated and controlled in accordance with Chapter 9.

5.58. Maintenance of Explosives Facilities.

5.58.1. Annually check the depth of the earth cover on ECMs to ensure it is at least 2 feet. MAJCOMs may require more frequent inspections based on environmental conditions. ECMs with a suitable material finish (e.g., geotextiles, gunite, asphalt) do not require a depth check as long as there are no signs of the earth cover washing out from underneath the suitable material. If the earth cover erodes to less than 2 feet, repair as soon as practical (not to exceed 90 days) or classify as an above-ground magazine (Note: Barricaded above-ground magazine criteria may be used if the remaining earth cover meets the barricade criteria of Section 6E).

5.58.2. Periodically check ventilators to ensure they function properly. Ventilators may be closed where blowing snow or humid air would increase condensation. They may also be closed to protect supplies from blowing sand. Set up controls to make sure heat does not build up within the storage space.

5.58.3. Periodically check fusible links to ensure they are unpainted, serviceable, properly installed, and temperature-rated per paragraph 5.42.2.

5.59. Maintenance and Repair in Hazardous Locations. Before beginning maintenance and repair in a hazardous location, a weapons safety representative will ensure the area is inspected for the presence of explosives residue. Maintenance personnel must provide for the removal of all hazardous materials, to include removal of all explosive residue material from equipment, crevices beneath floors, within walls and pipes, and under fittings where explosives may have collected. The area should be washed down thoroughly.

5.60. Maintenance and Repair of Hazardous Location Equipment and Electrical Installations. Extraordinary care will be taken in the maintenance and repair of equipment and electrical installations in hazardous locations.

5.60.1. Equipment and electrical installations must be periodically inspected and maintained by qualified personnel, with a written record kept of the inspections and maintenance. Where inspection frequency is not prescribed in a TO, technical manual (TM), or other directive, the inspection period will be decided by the local fire chief on the basis of the existing situation.

5.60.2. Before repairs are allowed on any equipment or electrical installation that has been exposed to explosive residue contamination, clean the equipment and tag it. The operating supervisor must sign the tag, certifying that all explosives have been removed. If it has been impossible to clean some part, note this on the tag, together with clear instructions to maintenance personnel on how to handle it safely.

5.61. Maintenance and Repair of Electrical Equipment. Only qualified persons are authorized to maintain and repair electrical equipment. Where the equipment may have been exposed to contamination from explosives, the explosives will be removed or neutralized before repairs are started.

5.62. Post-Maintenance and Repair of Explosives Facilities and Equipment.

5.62.1. Inspect the facility after completion of the work to ensure it is safe for resumption of explosives storage or operations.

5.62.2. Examine and test newly repaired equipment to ensure its safe operating condition before resuming use of the equipment.

Table 5.1. Lightning Sideflash Policy for Nuclear Weapon Configurations

Weapon	Configuration	Sideflash Policy Requirement
W80, W84, W78, W87	All TO 11N-WXX-1 Configurations[1]	No separation distance required
B83	Less than a fully-assembled forward assembly[1,2]	Apply separation distance IAW paragraph 5.23.4
B61	Major Maintenance[1,3]	Apply separation distance IAW paragraph 5.23.4

Notes for Table 5.1.

1. Maintenance Actions accomplished IAW Special Procedures, Alts or Mods must be reviewed and approved IAW AFI 91-103. Sideflash policy requirements must be determined on a case-by case basis and properly documented via Special Procedures, Alts or Mods.
2. See 11N-B83-1A, *Assembly, Test, Maintenance, and Storage Procedures with Illustrated Parts Breakdown; B83-0/-1 (Supplement).*
3. “Major Maintenance” is defined as any activity in which any of the major sub-assemblies are separated.

Chapter 6

PROTECTIVE CONSTRUCTION AND SPECIFIC EXPLOSIVES FACILITY DESIGNS

Section 6A—Introduction

6.1. General. This chapter contains standards for construction of earth-covered magazines (ECM), barricaded open storage modules, barricades, ARMCO revetments, substantial dividing walls, firewalls, and multicube or segregated magazines. Facilities constructed per this chapter:

6.1.1. Are permitted to use reduced separation distance criteria as shown in Chapter 12.

6.1.2. Must meet all the other design criteria of Chapter 5.

6.2. Above Ground Magazines. There are no construction criteria for AGMs other than the electrical and LPS design criteria in Chapter 5.

6.3. Special Structures. The DDESB has approved reduced NEWQD and reduced QD for AGM and containers listed in DDESB TP 15, *Approved Protective Construction*. Use and siting of these AGM and containers must meet all conditions or restrictions specified in the design and approval documentation as described in the referenced document.

6.4. High Performance Magazines and Underground Explosives Facilities. See DoD 6055.09-M, *DoD Ammunition and Explosives Safety Standards*, for information on High Performance Magazines and underground explosives facilities.

Section 6B—Protective Construction

6.5. Purpose of Protective Construction. Construction features and location are important safety considerations when planning facilities. Potential explosions' effects may be altered significantly by construction features that limit the amount of explosives involved, attenuate blast overpressure or thermal radiation, and reduce the quantity and range of hazardous fragments and debris. (Note: Proper location of ES in relation to PES helps minimize unacceptable damage and injuries in the event of an incident.) The major objectives in facility planning will be to:

6.5.1. Protect against explosion propagation between adjacent bays or buildings and protect personnel against death or serious injury from incidents in adjacent bays or buildings. The construction of separate buildings to limit explosion propagation, rather than the use of either protective construction or separation of explosives within a single building, shall be considered when safety would be greatly enhanced or cost would be significantly reduced.

6.5.2. Protect assets, when warranted.

6.6. Requirements for Use of Protective Construction. Hardening an ES or constructing a PES to suppress explosion effects and provide an appropriate degree of protection may allow a reduction of the separation distances required by QD tables.

6.6.1. Design of explosion resistant facilities shall be accomplished by an organization or individual experienced in the field of structural dynamics using design procedures accepted by professionals in the field. Unified Facilities Criteria (UFC) 3-340-02, *Structures to Resist*

the Effects of Accidental Explosions, (formally known as TM-5-1300), is an appropriate source of effects data and design methods.

6.6.2. **Existing, Approved Protective Construction Designs.** DDESB TP 15 documents previously approved protective construction designs. Explosives site plan submissions utilizing approved protective construction designs shall:

6.6.2.1. Reference the DDESB approval memorandum.

6.6.2.2. Identify the design or drawing numbers used, if available.

6.6.2.3. Specify that the protective construction will be used in the same manner as that stated in the referenced in the DDESB approval memorandum.

6.6.2.4. State that the structural design has not been altered in any manner that impacts the design's integrity or its ability to provide the required level of protection.

6.6.2.5. State that the site specific adaptations of the design have been reviewed and are appropriate for the site conditions.

6.6.3. **Modifications to Previously Approved Protective Construction Designs.** For a protective construction design previously approved by the DDESB, where a structural aspect of the protective design has been modified by a structural engineer with experience in designing blast resistant structures, the submitting MAJCOM shall provide:

6.6.3.1. A complete description of the structural modifications made, the reasons for the modifications, and any explosives safety impact resulting from the modifications.

6.6.3.2. The basis of design and the explosives safety protection being afforded by the modified design.

6.6.3.3. The following protective construction design and MAJCOM review data:

6.6.3.3.1. For preliminary DDESB approval, concept structural design drawings that are at least 35 percent complete. For final DDESB approval, the structural design drawings must be at least 60 percent complete, with all protective construction design modifications sufficiently developed for validation.

6.6.3.3.2. Design calculations for all critical structural elements.

6.6.3.3.3. All applicable electrical, grounding, and LPS details.

6.6.3.3.4. Supporting blast analyses, experimental data reports, blast design calculations, and other technical information. Blast analysis and design calculations must satisfy UFC 3-340-02 requirements.

6.6.3.3.5. A memorandum from the submitting MAJCOM civil engineering office verifying that the protective construction design modifications comply with DoD 6055.09-M and UFC 3-340-02 requirements. This verification will be based upon a quality control review (unless a more detailed independent technical review is warranted based upon either the lack of experience by the designer or the use of a new, unvalidated blast analysis or design approach) by a competent DoD blast design agency such as the Naval Facilities Engineering Services Center (NAVFAC ESC) or the US Army Engineering and Support Center, Huntsville (USAESCH). AFSC/SEWC will provide appropriate contact information upon request.

Because both of these organizations operate on a cost reimbursable basis, projects must arrange payment for these organization's services.

6.6.4. **New Protective Construction Designs.** For a new protective construction design, the submitting MAJCOM shall provide:

6.6.4.1. The criteria being met; a complete description of both the design's capabilities and the basis for the design, and the level of explosives safety protection level it affords.

6.6.4.2. The following protective construction design and MAJCOM review data:

6.6.4.2.1. For preliminary DDESB approval, concept structural design drawings that are at least 35 percent complete. For final DDESB approval, the structural design drawings must be at least 60 percent complete, with all protective construction design modifications sufficiently developed for validation.

6.6.4.2.2. Design calculations for all critical structural elements.

6.6.4.2.3. All applicable electrical, grounding, and LPS details.

6.6.4.2.4. Supporting blast analyses, experimental data reports, blast design calculations, and other technical information. Blast analysis and design calculations must satisfy UFC 3-340-02 requirements.

6.6.4.2.5. A memorandum from the submitting MAJCOM civil engineering office verifying that the protective construction design complies with DoD 6055.09-M and UFC 3-340-02 requirements. This verification will be based upon a quality control review (unless a more detailed independent technical review is warranted based upon either the lack of experience by the designer or the use of a new, unvalidated blast analysis or design approach) by a competent DoD blast design agency such as the Naval Facilities Engineering Services Center (NAVFAC ESC) or the US Army Engineering and Support Center, Huntsville (USAESCH). AFSC/SEWC will provide appropriate contact information upon request. Because both of these organizations operate on a cost reimbursable basis, projects must arrange payment for these organization's services.

6.6.4.3. Once approved, a standard protective construction design can be site-adapted, provided the conditions and limitations of the DDESB approval are met. The DDESB will document new standard approved protective construction designs in DDESB TP 15.

Section 6C—Earth-Covered Magazines

6.7. Earth-Covered Magazines. An ECM's primary purpose is to protect AE. To qualify for the default IMD in Table 12.1, an ECM, acting as an ES, must not collapse. Although substantial permanent deformation of the ECM may occur, sufficient space should be provided to prevent the deformed structure or its doors from striking the contents.

6.8. Earth-Covered Magazine NEWQD Limits. ECMs may be approved for storage of up to 500,000 lbs NEWQD of HD 1.1 in accordance with paragraph 12.6.1.

6.9. Earth-Covered Magazine Design Load Criteria. ECMs must be designed to withstand the following: (Note: Undefined ECMs must meet the criteria of paragraphs 6.9.1 through 6.9.3 only.)

6.9.1. Conventional (e.g., live, dead, snow) loads for the barrel of an arch-shaped ECM.

6.9.2. Conventional (e.g., live, dead, snow) and blast-induced loads for the roof of a flat-roofed ECM.

6.9.3. Conventional (e.g., live, dead, snow) loads for the rear wall of an arch-shaped ECM and for the rear and side walls of a flat-roofed ECM.

6.9.4. Expected blast loads, as applicable:

6.9.4.1. On the head wall and door of 3-Bar ES ECM is a triangular pulse with peak overpressure of 43.5 psi and impulse of $11.3W^{1/3}$ psi-ms.

6.9.4.2. On the head wall and door of 7-Bar ES ECM is a triangular pulse with peak overpressure of 101.5 psi and impulse of $13.9W^{1/3}$ psi-ms.

6.9.4.3. On the roof of a flat-roofed ES ECM is a triangular pulse with peak overpressure of 108 psi and impulse of $19W^{1/3}$ psi-ms.

6.10. Earth-Covered Magazine Earth Cover Criteria.

6.10.1. Earth cover will be reasonably cohesive and free from harmful (toxic) matter, trash, debris, and stones heavier than ten pounds or larger than six inches in diameter. Solid or wet clay or similar types of soil will not be used as earth cover because they are too cohesive. The larger of acceptable stones shall be limited to the lower center of fills and shall not be used for earth cover over magazines. The earthen material will be compacted and prepared, as necessary, for structural integrity and erosion control.

6.10.2. If it is impossible to use a cohesive material (e.g., in sandy soil), or where vegetation growth is ineffective in preventing erosion, the earth cover over ECM will be finished with 2-3 inches of a suitable material (e.g., geotextiles, gunite, asphalt) that will not produce hazardous debris, but will ensure structural integrity. The important consideration for these materials is that they pulverize in the event of an accidental explosion. A mixture combined with straw, bark, or comparable material would be suitable. Wire mesh may be used in the finishing material. Aggregate may not be added to the finishing material. Consider means of validating earth cover depth as part of the design of the finishing material. Reference TM 5-630, Natural Resources and Land Management, for further information.

6.10.3. Select vegetation for ECM so that their weight or root system will not damage the structure.

6.10.4. The earth fill or earth cover between ECM may be either solid or sloped. A minimum of 2 ft of earth cover will be maintained over the top of each ECM. (Note: If the specified thickness and slope of earth on the ECM is not maintained, the ECM must be sited as an AGM. Barricaded AGM criteria may be used if the remaining earth cover meets the barricade criteria of Section 6E.)

6.10.5. See **paragraph 5.58.1** for maintenance of earth cover on ECMs.

6.11. Earth-Covered Magazine Drawings.

6.11.1. DDESB TP 15 provides listings of the various types of ECM that have been constructed over the years and identifies their structural strength designator (i.e. 7-Bar, 3-Bar, or Undefined). This reference also lists the 7-Bar and 3-Bar ECM designs that are currently approved for new construction.

6.11.2. If an ECM's drawing number or numbers are not listed in DDESB TP 15 it will be treated as an Undefined ECM, until a structural analysis is performed to show that the ECM qualifies for another structural strength designation, or support documentation is provided to prove the ECM had been approved by the DDESB with a different structural strength designation.

6.11.3. For existing, arch-shaped Undefined ECM, U. S. Army Corps of Engineers (USACE) Report HNDED-CS-S-95-01, *Guide For Evaluating Blast Resistance Of Nonstandard Magazines*, may be used to determine if an Undefined ECM could qualify as a 7-Bar or a 3-Bar ECM.

6.11.4. DDESB approval is required prior to any change in an ECM's structural strength designator.

6.11.5. Certain ECMs have been approved with reduced NEWQD and reduced QD and these are also listed in DDESB TP 15. Use of these ECMs requires that their use and siting meet all conditions and restrictions specified in the design and approval documentation, as described in the referenced document.

6.11.6. New construction of previously DDESB-approved 7-Bar and 3-Bar ECM must meet the minimum requirements of the current revisions of the approved drawings.

Section 6D—Barricaded Open Storage Modules

6.12. Barricaded Open Storage Modules. Modules allow the same amount of explosives to be stored using far less land space. However, in the event of an unplanned detonation in a cell, AE in an adjacent cell will be covered with earth and unavailable for use until extensive uncovering operations and possibly maintenance are completed. To reduce the MCE expected from an explosion in one cell, buffered storage arrangements may be used as described in paragraph 12.71.

6.13. Barricaded Open Storage Modules NEWQD and AE Type Limits.

6.13.1. The maximum NEWQD permitted to be stored within each cell is 250,000 lbs. Normal mixing rules (see paragraph 12.7) apply. HD 1.4 is not additive to the NEWQD.

6.13.2. Storage will be limited to AE that will not promptly propagate explosions or mass fire between modules, and that are not susceptible to firebrands and fireballs. These restrictions allow storage at K1.1 separation. Intermagazine (IM) distance for HD 1.2.x. and 1.4 for module to module separation is based on total NEWQD. MCE and Largest Single Round Net Explosive Weight for Quantity Distance (LSRN) are not used to calculate IM distance between modules. Only the following AE are approved for modular storage:

6.13.2.1. HE bombs (fuzed or unfuzed, with or without fins), and similarly cased HD 1.1 AE when stored on nonflammable pallets.

6.13.2.2. The below items when contained in nonflammable shipping containers:

6.13.2.2.1. 30 mm and smaller AE.

6.13.2.2.2. CBU.

6.13.2.2.3. Inert AE components.

6.13.2.2.4. HD 1.4 AE.

6.13.3. Module storage of AE items in flammable outer-packaging configurations will be minimized. AE items in flammable outer packaging configurations must be covered with fire retardant material. Combustible dunnage or other flammable material will not be stored either in, or within, 100 ft of modules.

6.13.4. When fire retardant materials are used to cover AE items stored in modules, ventilation will be provided between the covers and the stored AE items to minimize the effects of solar heating upon the stored AE.

6.13.5. AE stored in each module will be limited to one type of item, unless the MAJCOM/SEW authorizes mixed storage. Mixed storage of high explosive (HE) bombs and CBUs presents an extreme fragment hazard and should be avoided.

6.14. Barricaded Open Storage Module Design Criteria.

6.14.1. As depicted in Figure 6.1, a module is a barricaded area composed of a series of connected cells with hard surface (e.g., concrete, packed earth, engineered materials, etc.) storage pads separated from each other by barricades.

6.14.2. The only restriction on the arrangement of cells within a module and of groups of modules is that cell openings may not face each other, unless they are either barricaded or meet QD criteria for an unbarricaded AGM (see Table 12.1).

6.14.3. Although a light metal shed or other lightweight fire retardant cover may be used for weather protection for individual cells, heavy structures (e.g., reinforced concrete, dense masonry units) or flammable material will not be used.

6.14.4. Table 6.1 provides the minimum pad sizes necessary to store the NEWQD indicated. The pad's size may need to be adjusted to accommodate specific AE. This adjustment will impact the required barricade height (see Table 6.1, Note 3).

6.14.5. Barricade requirements:

6.14.5.1. All barricades used in forming the module will meet the requirements in Section 6E. The width or length of the stack of AE (controlled by the pad size of the cell) and the distances between the stack and the top of the barricade influences the minimum barricade height requirement. The heights listed in Table 6.1 are the minimum requirement for barricade locations. These minimum heights are based upon both the storage pad sizes and the separations shown. When feasible, barricade heights shall be increased (see paragraph 6.16.2).

6.14.5.2. The centerlines of barricades between cells of the module will be located at a point halfway between adjacent AE storage pads. Back and end (outside) barricades will be located at the same distance from the pads as those between the cells.

6.14.5.3. When selecting a site for a module, maximum advantage should be taken of natural topographical barriers. When used, natural barriers will provide the same level of protection as the barricade shown in Figure 6.1.

Section 6E—Barricades

6.15. Barricades.

6.15.1. Properly constructed and sited barricades, and undisturbed natural earth have explosives safety applications for protecting against low-angle fragments. Barricades provide no protection against high-angle fragments or lobbed AE; some of these high-angle fragments may travel to the outer limits of protection areas set up for PTR and inhabited building (IB) distances. If the barricade is destroyed in the process of providing protection, then secondary fragments from the destroyed barricade must also be considered as part of a hazards analysis.

6.15.2. To reduce hazards from high-velocity, low-angle fragments, the barricade must be placed between the PES and the ES so that the fragments of concern impact the barricade before the ES. The barricade must both be thick enough so that it reduces fragment velocities to acceptable levels and high enough so that it intercepts the ballistic trajectories of the fragments of concern.

6.15.3. A barricade must interrupt all direct lines of sight between the ES and PES, and, in addition, meet the height and length requirements per paragraphs 6.16. and 6.17. respectively.

6.15.4. Barricades around the exposed site can be used to reduce minimum separations required by Table 12.1 or fragment distances from 1.2 munitions if tests or engineering analysis show the barrier will stop the low-angle, high-velocity fragments and the building will provide protection from the high-angle fragments that can be expected from the PES. The distance cannot be reduced below that required to provide adequate overpressure protection to the ES.

6.15.5. A secondary barricade at sites of mission-essential equipment and personnel (such as wing communications and trim pads) can provide some additional protection; however, high-angle, low-velocity fragments will still impact the exposed site.

6.15.6. Barricades meeting the requirements of paragraph 6.15.7. may be modified by substituting a retaining wall for the slope on one side. The slope and thickness of the retaining wall (preferably of concrete) must ensure a wide enough top to hold the earth firmly in place.

6.15.7. The slope of an earthen barricade must be two horizontal to one vertical, unless erosion controls are used. Earthen barricades with slopes no greater than one and one half horizontal to one vertical that were approved prior to 1976 may continue to be used. However, renovations to these facilities will meet the above criteria, when feasible.

6.16. Barricade Size and Orientation to Prevent Prompt Propagation Due to High-Velocity, Low-Angle Fragments. The location, height, and length of a barricade to prevent prompt propagation due to high-velocity, low-angle fragments shall be determined as follows:

6.16.1. **Location.** The barricade may be placed anywhere between the PES and the ES; however, placing it closer to either the PES or ES will provide slightly greater asset protection. For AE stacks of different height (elevation), the location shall determine the barricade 's required height.

6.16.2. **Height.** To determine the required barricade height:

6.16.2.1. Establish a reference point at the top of the far edge of one of the two AE stacks between which the barricade is to be constructed. When both stacks are of equal height, the reference point may be established on either stack. If the tops of the two stacks are not of equal height (elevation), the reference point shall be on the top of the lower stack. (NOTE: To preclude building excessively high barricades between AE stacks of different height (elevation), the barricade should be located as close as possible to the lower stack (see Figure 6.2.).)

6.16.2.2. Draw a line from the reference point to the highest point of the other stack (line-of-sight).

6.16.2.3. The barricade's height shall be such that the entire width of the barricade crest is at least 1 ft **[0.3** m] above the line-of-sight as established in paragraph 6.16.2.2. (NOTE: The barricade height shall be measured at the time of construction as prescribed in paragraph 6.16.2. If the specified thickness and height of the barricade are not maintained, the AE stack height shall be reduced as necessary or the AE stacks shall be resited appropriately. Consideration should be given to making the barricade higher than required for safety purposes in order to account for accuracy of storage practices regarding AE stack heights, potential mission changes (requiring higher AE stacks), and barricade settling/erosion/etc. that could seriously degrade AE storage capability.)

6.16.3. **Length.** The barricade's length will be determined per Figure 6.2.

6.17. Barricade Size and Orientation for Barricaded ILD Protection. The location, height, and length of a barricade shall be determined as follows:

6.17.1. **Location.** The barricade may be placed anywhere between the PES and the ES. The location shall determine the barricade's required height.

6.17.2. **Height.** To determine the required barricade height:

6.17.2.1. Establish a reference point at the top of the far edge of one of the two AE stacks between which the barricade is to be constructed. When both stacks are of equal height, the reference point may be established on either stack. If the tops of the two stacks are not of equal height (elevation), the reference point shall be on the top of the lower stack. (NOTE: To preclude building excessively high barricades, the barricade should be located as close as possible to the stack on which the reference point was established (see Figure 6.3.).)

6.17.2.1.1. When the exposed site is not a PES, measure to the top of the ES. If the ES is an uninhabited PES (i.e., a service magazine), measure to the top of the stack. If the ES is an inhabited PES (i.e., operating location), measure to the top of the ES.

6.17.2.2. Draw a line from the reference point to the highest point of the other stack.

6.17.2.3. Draw a second line from the reference point forming an angle of two degrees above the line.

6.17.3. **Length.** The barricade 's length shall be determined per Figure 6.3.

6.18. Barricade Size and Orientation for Protection Against Overpressure. General procedures to predict pressure mitigation versus barricade design and location have not been developed. However, based on direct-experimental work, the overpressure loading on a surface area shielded by a barricade is reduced by approximately 50 percent when the following conditions are met:

6.18.1. Overpressure barricades are only approved for use when placed at the front of 7-BAR ECMs as an ES and a fragment barricade is placed at the PES.

6.18.2. **Location.** The barricade's standoff is within two barricade heights of the protected area.

6.18.3. **Height.** The top of the barricade is at least as high as the top of the protected area.

6.18.4. **Length.** The length of the barricade is at least two times the length of the protected area.

6.19. Barricade Construction Materials. Materials for earthen barricades will be reasonably cohesive and free from harmful (toxic) matter, trash, debris, and stones heavier than ten pounds [4.54 kg] or larger than six inches [152 mm] in diameter. The larger of acceptable stones will be limited to the lower center of fills. Earthen material will be compacted and prepared, as necessary, for structural integrity and erosion control. Solid or wet clay or similar types of soil will not be used in barricades because they are too cohesive. If it is impossible to use a cohesive material (e.g., in sandy soil) the barricade will be finished with a suitable material (e.g., geotextiles, gunite) that will not produce hazardous debris, but will ensure structural integrity.

6.20. Barricade Designs.

6.20.1. DDESB TP 15 lists DDESB-approved designs and construction materials for barricades. Use of these barricades satisfies barricading criteria.

6.20.2. Alternate barricade designs (e.g., earth filled steel bin) may be approved by the DDESB provided that testing or analysis demonstrates their effectiveness in stopping high velocity, low angle fragments.

6.21. Natural Barricades. Natural barricades (e.g., hills) meeting the requirements of this section are acceptable as barricades. Submit information in the explosives site plan to demonstrate compliance with barricade design requirements, and include topographical maps of the terrain.

6.22. Inspection of Barricades. Inspect barricades at least annually to determine the degree of settling or erosion. MAJCOMs may require more frequent inspection based on environmental conditions. Barricades finished with a suitable material (e.g., geotextiles, gunite, asphalt) do not require a depth check as long as there are no signs of the earth fill washing out from underneath the suitable material. Add fill if a barricade has deteriorated and it no longer provides effective protection. Also inspect wood riveted barricades and replace rotten timbers or planking. Maintain barricades so as to prevent erosion or fire hazards. If the magazine's earth cover erodes

to less than 2 feet repair as soon as practical (not to exceed 90 days) or classify as an aboveground unbarricaded magazine.

Section 6F—Earth-Filled, Steel Bin-Type Barricades for Outside Storage

6.23. Earth-Filled, Steel Bin-Type Barricades for Outside Storage.

6.23.1. These barricades, also known as ARMCO, Inc. revetments, are earth-filled steel bins used to separate AE awaiting scheduled processing (e.g., AE on a flight line associated with aircraft parking or loading operations; or the temporary positioning of AE awaiting transfer to preferred, long-term storage). These barricades, which are also used to separate explosive-loaded aircraft, are normally used to form a series of cells. They are designed to limit the MCE, for QD siting purposes, of AE properly positioned in separate cells by preventing prompt detonation transfer to adjacent cells.

6.23.2. When properly sited, these cells prevent prompt detonation transfer; however; all assets in the series of cells are at risk of loss. Although a revetment is effective in limiting the blast loading of an adjacent ES to that produced by the largest contents of a single cell, there is a significant probability that the contents of many of the cells will be damaged or destroyed by the initial and subsequent fire and explosion events. The extent of such losses increases with the amount of explosives present.

6.24. ARMCO, Inc. Revetment HD Limits. ARMCO, Inc. revetments cells are approved for storage of any HD 1.1 and HD 1.2 AE assigned to SG 1 through 4 (as discussed in paragraph 3.22). In addition, storage of HD 1.3, HD 1.4, or HD 1.6 items is approved.

6.25. Types of ARMCO, Inc. Revetments.

6.25.1. Type A revetments, which must be a minimum of 7 feet [2.1 m] thick, can be used to limit a MCE in a series of cells to the largest quantity in a single cell, provided the quantity in the single cell does not exceed 30,000 pounds NEW [13,608 kg NEQ].

6.25.2. Type B revetments, which must be a minimum of 5.25 feet [1.6 m] thick, can be similarly used to limit the MCE, provided no cell contains more than 5,000 pounds NEW [2,268 kg NEQ].

6.26. Requirements for ARMCO, Inc. Revetments. For ARMCO, Inc. revetments to be used effectively, the following conditions must be met:

6.26.1. The criteria shown in Figure 6.2.

6.26.2. AE will be positioned no closer than 10 feet [3.1 m] from cell walls, no closer than 3 feet [0.9 m] from the end of the wing walls, and no higher than 2 feet [0.6 m] below the top of cell walls.

6.26.3. AE will be distributed over the available area within the cell, rather than being concentrated in a small area.

6.26.4. AE stored in a cell in quantities near the maximum NEW limit will not be configured into a single row of pallets, stacks, or trailers.

6.26.5. The storage of AE in flammable outer-pack configurations will be minimized.

6.27. ARMCO, Inc. Revetment Designs. See DDESB TP 15 for ARMCO, Inc. revetment designs.

Section 6G—Substantial Dividing Walls and Blast Doors

6.28. Substantial Dividing Walls. These walls are one way of separating explosives into smaller groups to minimize the effects of an explosion and allow a reduction in Q-D separation. To receive credit as a dividing wall, reinforced concrete walls must either meet Substantial Dividing Wall criteria or be designed in accordance with the criteria in UFC 3-340-02. These walls may be used to comply with the compatibility group mixing rules given in Chapter 7 provided the required intermagazine separation distance between the substantial dividing walls are maintained as discussed below. Note: Dividing walls filled with earth or sand, used to compartmentalize magazines must be at least 5 feet thick with earth or sand packed between retaining walls. Sand-bag type dividing walls will be at least 5 feet thick, except where approved for other uses as in TO 11N-20-7. See DDESB TP 15, *Approved Protective Construction*, for all storage requirements.

6.28.1. Definition of an SDW. An SDW is a reinforced concrete wall having the following characteristics: (Note: Existing 12-inch reinforced concrete walls originally constructed for explosives operations, explosives storage, or remotely controlled explosives operations are considered adequate for meeting requirements listed in 6.28.1.1. through 6.28.1.6. only)

6.28.1.1. A minimum thickness of 12 inches.

6.28.1.2. A minimum steel reinforcing bar size of ½-inch (0.50) diameter (#4).

6.28.1.3. Steel reinforcing bars are spaced not more than 12 inches on center horizontally and vertically, on both faces of the wall, with bars on one face staggered with the bars on the opposite face.

6.28.1.4. Concrete cover over the steel reinforcing bars in approximately 2 inches thick.

6.28.1.5. Concrete has a minimum compressive strength of 2,500 pounds per square inch (psi).

6.28.1.6. SDW main steel is continuous into supports as follows:

6.28.1.6.1. If the SDW is used for prevention of either prompt detonation or propagation of burning reactions, it must, at a minimum, be adequately supported at the floor.

6.28.1.6.2. If the SDW is used for personnel protection, from either detonation or burning reactions, for remotely-controlled operations, it must, at a minimum, be adequately supported on at least two sides (e.g., the SDW is supported at the floor and with at least one adjacent SDW.

6.28.2. When an SDW described above is incorporated into a room or cubicle, additional structural considerations must be addressed in order to limit internal pressure build-up within the room or cubicle and assure the capability of the SDW to provide prompt propagation protection to munitions in adjacent rooms or cubicles. For this reason, the following additional criteria apply to a room or cubicle incorporating one or more SDW:

6.28.2.1. A minimum of two surfaces (wall or roof) of the room or cubicle must be open and frangible. A surface is considered frangible if its unit weight $\leq$ 10 lbs/ft^2. If a roof is treated as one of the frangible surfaces, then any potential additional dead load must be considered when calculating the roof's unit weight. In areas where the design ground snow load, p_g, in ASCE 7, "Minimum Design Loads for Buildings and Other Structures" (latest version) or UFC 3-310-01, "Structural Load Data," exceeds 20 lbs/ft^2, the calculation of a roof's unit weight must include consideration of potential snow load. To avoid undue conservatism, the snow load contribution to a roof's unit weight may be taken as 42% of the average roof design snow load, calculated in accordance with ASCE 7.

6.28.2.2. A minimum scaled vent area ($A_v/V^{2/3}$) of 1.85 will be provided; where A_v = total area of frangible and open surfaces (ft^2) and V = volume of room (ft^3).

6.28.2.3. When used as a firewall for prevention of propagation of burning reactions, the SDW must be continuous from the floor to the roofline to mitigate thermal effects unless otherwise required by local fire codes to extend above the roof. When used to prevent a prompt detonation reaction, the SDW must be at least two feet higher than the AE stacks on either side of the SDW.

6.28.2.4. Those rooms or cubicles containing only materials that are expected to exhibit burning reactions will have adequate venting area; that is, a frangible wall or roof.

6.28.3. Application and use of SDW for prevention of prompt detonation or propagation of burning reactions. The following conditions apply to the use of SDW for the prevention of prompt detonation or propagation of burning reactions. When these conditions are not met, individual NEWQD of each room or cubicles will be summed together and QD will be based on the summed NEWQD.

6.28.3.1. To prevent a prompt detonation reaction in any acceptor room or cubicle separated by an SDW from adjacent donor rooms or cubicles, each adjacent donor room or cubicle containing material that will detonate is limited to a maximum of 425 pounds NEWQD or to a loading density (NEWQD/room volume (ft^3)) of < 0.20 pounds/ft^3, whichever is attained first. Each adjacent donor room or cubicle containing HD 1.2.1 material is limited to a maximum NEWQD of 5,000 pounds, and to a maximum credible event (MCE) of 425 pounds or a loading density of (MCE/room volume (ft^3)) of < 0.20 pounds/ft^3, whichever is attained first. Each adjacent donor room or cubicle containing HD 1.2.2 material is limited to a maximum NEWQD of 5,000 pounds. Each adjacent donor room or cubicle containing HD 1.2.3 material is limited to a maximum NEWQD of 5,000 pounds, and to a largest single item NEWQD of 425 pounds or a loading density of (largest single item NEWQD/room volume (ft^3)) of < 0.20 pounds/ft^3, whichever is attained first. For HD 1.1 and HD 1.2.1 located in acceptor rooms or cubicles, storage is limited to SG 1, 2, 3, and 4 AE only. HD 1.1 and HD 1.2 AE will be placed no closer than 3 feet from the nearest wall.

6.28.3.2. To prevent a prompt detonation reaction involving SG 5 in an acceptor room or cubicle separated by an SDW from adjacent donor rooms or cubicles, each adjacent donor room or cubicle containing material that will detonate is limited to a maximum of 20 pounds NEWQD, or to a loading density (NEWQD/room volume (ft^3)) of < 0.01 pounds/ft^3, whichever is attained first. Each adjacent donor room or cubicle containing

HD 1.2.1 material is limited to a maximum NEWQD of 5,000 pounds, and to an MCE of 20 pounds or a loading density of (MCE/room volume (ft^3)) of < 0.01 pounds/ft^3, whichever is attained first. Each adjacent donor room or cubicle containing HD 1.2.2 material is limited to a maximum NEWQD of 5,000 pounds. Each adjacent donor room or cubicle containing HD 1.2.3 material is limited to a maximum NEWQD of 5,000 pounds, and to a largest single item NEWQD of 20 pounds or a loading density of (largest single item NEWQD/room volume (ft^3)) of < 0.01 pounds/ft^3, whichever is attained first. HD 1.1 and HD 1.2 AE will be placed no closer than 3 feet from the nearest wall.

6.28.3.3. To prevent propagation of a burning reaction (i.e., HD 1.3) between adjacent rooms or cubicles separated by an SDW, the NEWQD in each room or cubicle is limited to 5,000 pounds of packaged materials or 300 pounds for unpackaged materials. No standoff distance from the wall is required for HD 1.3.

6.28.3.4. When HD 1.2 and HD 1.3 are mixed together within a room or cubicle, their combined NEWQD shall be restricted to 5,000 pounds packaged or 300 pounds unpackaged. The MCE for HD 1.2.1 and the largest single item NEWQD for HD 1.2.3 shall comply with the paragraphs above.

6.28.3.5. Mission essential quantities of HD 1.4 located in donor or acceptor rooms or cubicles do not affect the prevention of a prompt detonation reaction or propagation of a burning reaction. No standoff distance from the wall is required for HD 1.4.

6.28.4. Application and use of SDW for personnel protection during remotely controlled AE operations. The following apply to the use of SDW for personnel protection during remotely controlled AE operations:

6.28.4.1. Personnel will be separated from operations involving materials that will detonate either by the shorter K24 separation distance when measured over or around an SDW or by the shortest distance that provides 2.3-psi level of protection to personnel. For HD 1.1, the NEWQD shall be used; for HD 1.2.1, the MCE shall be used; for HD 1.2.2, an NEWQD of 1.6 pounds shall be used; for HD 1.2.3, the largest single item NEWQD shall be used.

6.28.4.2. Personnel will be separated from operations involving only material where a burning reaction is expected by the shorter K8 separation distance when measured over or around an SDW or by the shortest distance that limits the thermal flux to personnel to 0.3 calories/cm^2/sec.

6.28.4.3. Personnel will be protected from fragments and debris having energies of 58 foot-pounds or greater (hazardous fragments). An SDW that is properly supported on two sides (such as a reinforced concrete floor and another SDW) will provide such personnel protection from a maximum credible event involving up to 300 pounds of AE expected to burn or up to 8 pounds of AE expected to detonate. The maximum credible event for HD 1.1 shall be the NEWQD; for HD 1.2.1, the MCE shall be used; for HD 1.2.3, the largest single item NEWQD shall be used. (Note: For HD 1.2.2, the maximum credible event is less than 8 pounds, by definition.)

6.28.5. If any of the SDW criteria discussed above cannot be met, then the wall or room design and explosives scenario will be separately analyzed to determine if equivalent

protection is provided by the available wall or room arrangement (e.g., a four wall cubicle, an alternate reinforced concrete wall design, a larger room, a greater standoff, or a smaller quantity of SG 5). The engineering analysis must address the specific conditions according to UFC 3-340-02 criteria to determine the proper wall construction or explosives weight and spacing limitations. DDESB approval is required for any analysis performed.

6.28.6. Intraline distance (ILD) level of protection is not addressed by this section. The requirement remains K18 or ILD, as specified in the appropriate tables for the HD in question. Presently, there is no consideration that an SDW or any type of wall provides an equivalent ILD level of protection. However, if an SDW is determined to provide the required personnel protection from a remotely controlled operation, then by default, it can be assumed that K18 protection is also provided by that SDW. Refer to UFC 3-340-02 and Mil-Std 398, *Shields, Operational for Ammunition Operations, Criteria for Design and Tests for Acceptance,* for personnel protection standards.

6.28.7. For special weapons, the criteria in TO 11N-20-7, *Nuclear Safety Criteria,* when more restrictive, will be the limiting factor and override the above criteria.

6.28.8. The provisions of paragraph 4.19 apply.

6.29. Blast Doors. Blast Doors may be required for openings through SDWs. When required, design these doors to be at least equal in strength to the SDW. See UFC 3-340-02 for design factors for new structures. Take care to ensure these doors are not installed as a matter of convenience. Avoid blast doors when a continuous SDW would not unnecessarily interfere with operations.

Section 6H—Multicube or Segregated Magazines

6.30. Multicube or Segregated Magazines. See Section 6G for guidance. If the NEWQD limit is exceeded in any one cell, compatibility must be maintained throughout the facility and the total NEWQD of all cells is used to compute QD requirements. See paragraph 12.7 for rules when combining mass detonating with non-mass detonating explosives.

6.30.1. See paragraph 12.7 for determining MCE. When using the provisions in this paragraph, each cell may be considered a separate facility with equivalent IM distance between cells, for determining NEWQD in QD calculations.

6.30.2. A substantial dividing wall that is continuous from the floor to the roofline, unless otherwise required by local fire codes to extend above the roof, may be used to meet equivalent HD 1.3 intermagazine protection for 5,000 pounds of packaged (shipping or transportation configuration) or 300 pounds of unpackaged HD 1.3 materials.

Figure 6.1. Typical Eight-Cell Barricaded Open Storage Module.

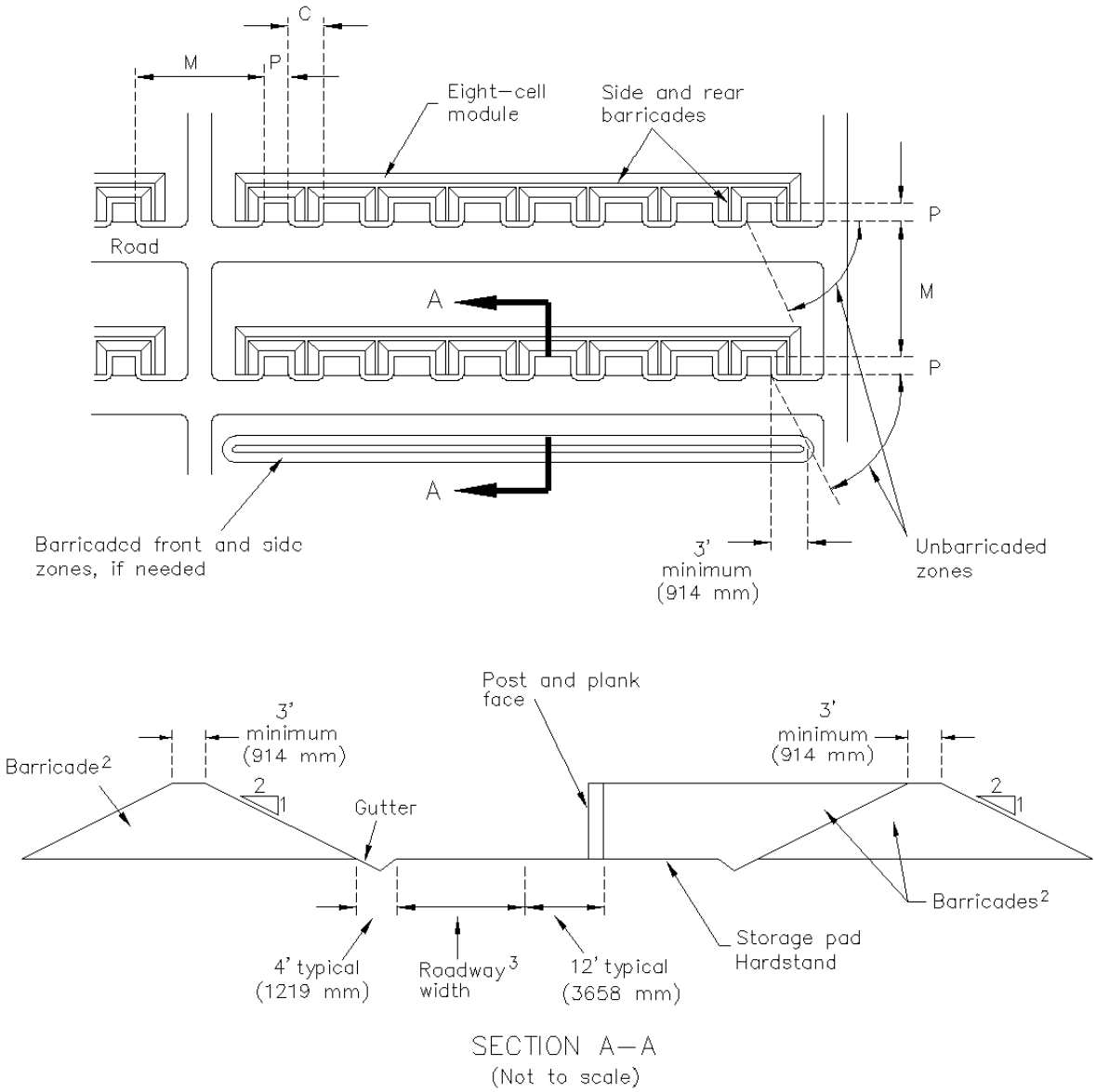

NOTES:

1. Number of cells, cells' NEWQD, pad sizes (P), distances between cells (C) and modules (M), and minimum barricade heights can vary (see Table 6.1).
2. Refer to Section 6E–Barricades for barricade design criteria and for alternate barricade designs.
3. Determined by the installation.

Figure 6.2. Determination of Barricade Length and Height to Prevent Prompt Propagation Due to High-Velocity, Low-Angle Fragments.

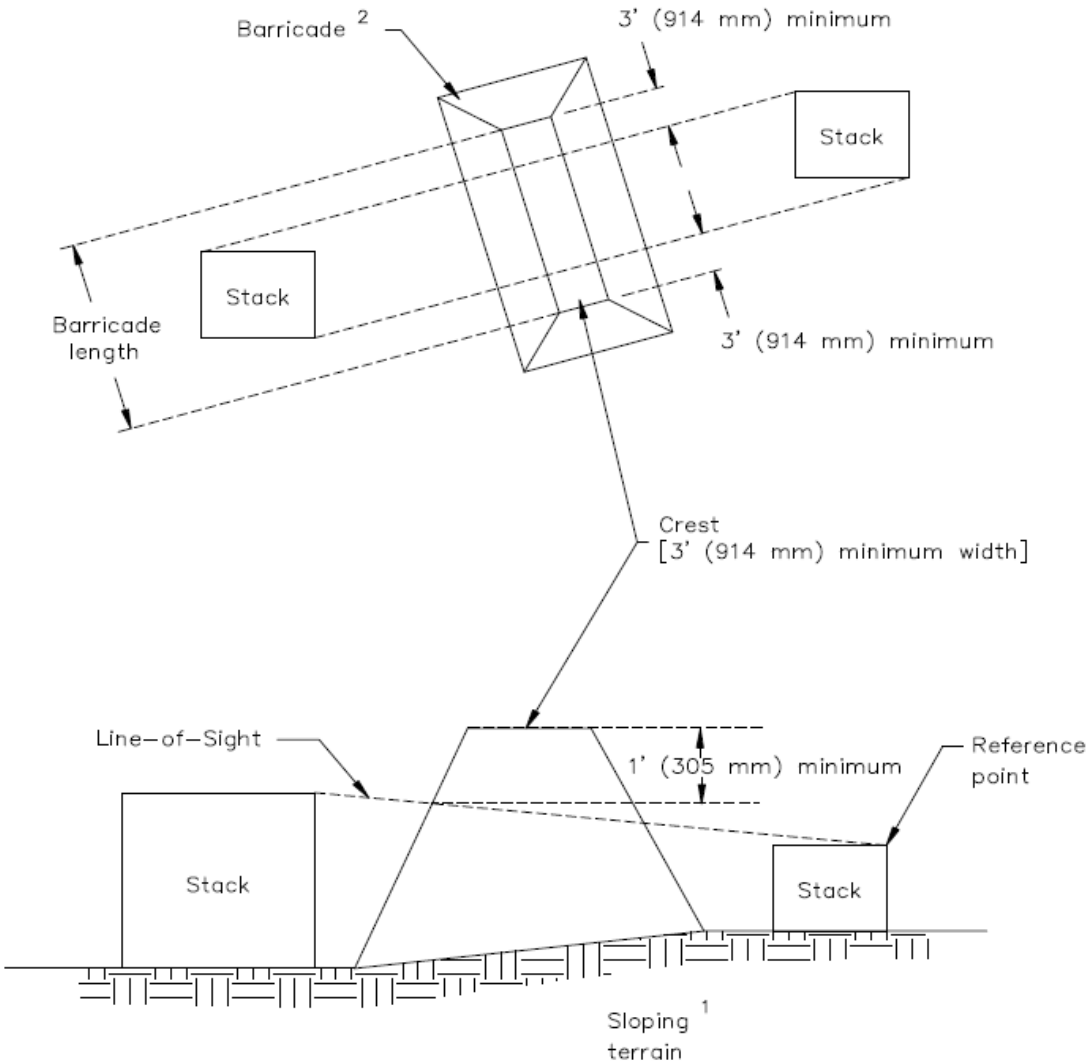

Notes:
1. This illustration is for sloping terrain; however, a similar approach is used for level terrain.
2. Barricade must meet construction and siting criteria of section 6E-Barricades

Figure 6.3. Determination of Barricade Length and Height for Barricaded ILD Protection.

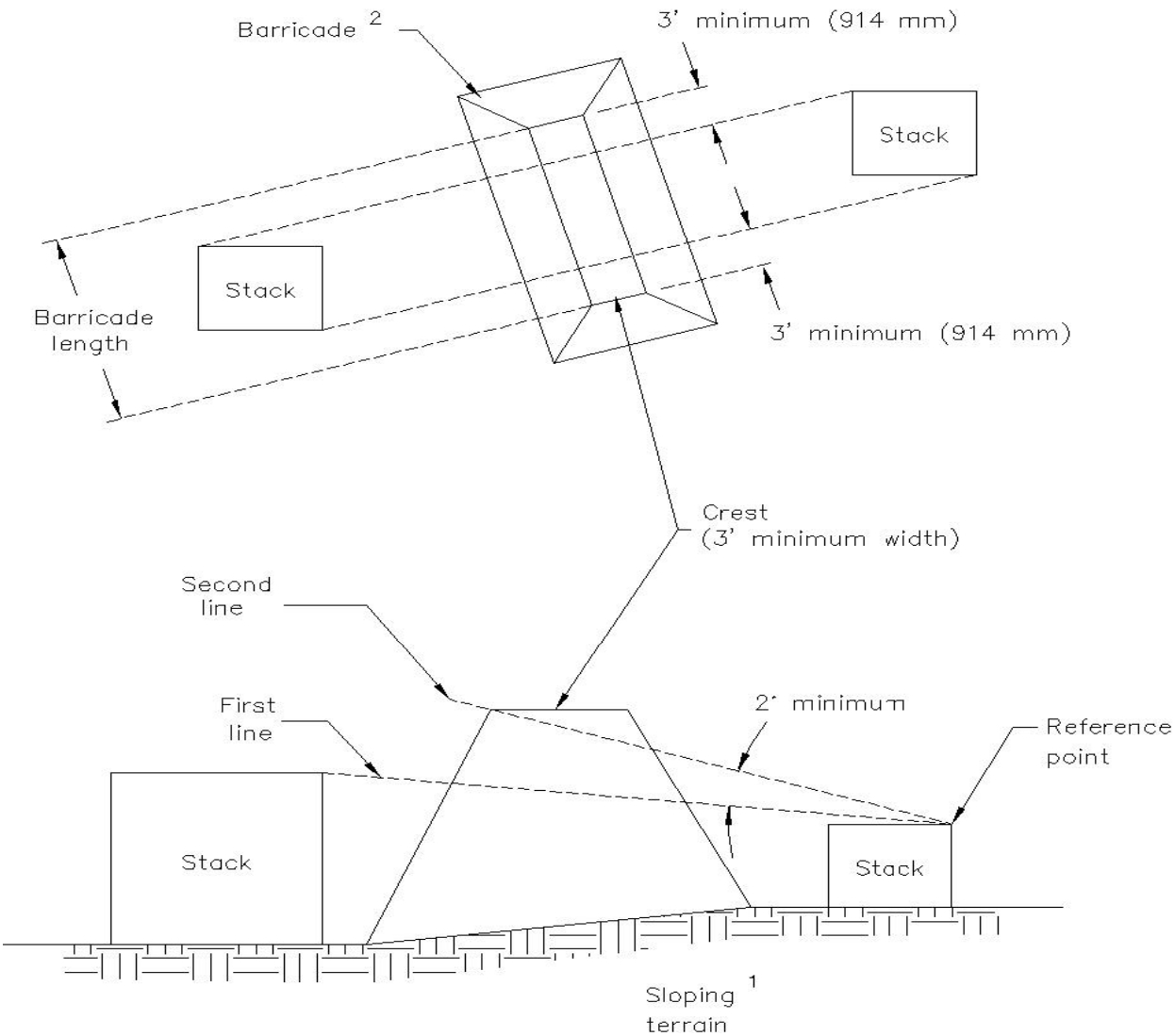

Notes:

1. This illustration is for sloping terrain; however, a similar approach is used for level terrain.
2. Barricade must meet construction and siting criteria of section 6E-Barricades

Table 6.1. HD 1.

NEWQD (lbs)	MINIMUM STORAGE PAD-TO-PAD SEPARATION DISTANCE ("C" IN FIGURE 6.1) [1,2] (ft)	MAXIMUM PAD DIMENSION ("P" IN FIGURE 6.1) WIDTH OR DEPTH (ft)	MINIMUM HEIGHT ABOVE TOP OF STACK [3] (ft)
50,000	41	30	2
70,000	45	30	2
100,000	51	30	2
150,000	58	30	2
200,000	64	30	2
200,000	64	40	2.5
250,000	69	40	2.5
250,000	69	50	3

NOTES:

1. D in ft, W in lbs

$$D = 1.1W^{1/3}$$

$$W = D^3/1.33$$

2. AE will not be stored beyond the boundaries of the storage pad.
3. Barricade height based upon size of storage pad. When P exceeds 50 ft, then the barricade height will be increased 6 in for each 10 ft increase.

Chapter 7

EXPLOSIVES OPERATIONS AND STORAGE

Section 7A—Introduction

7.1. Introduction. This chapter provides general information about explosives and safety requirements for operations involving explosives and explosives storage requirements, to include compatibility principles and mixed compatibility storage. The absence of specific guidance on a particular explosives operation does not imply that safeguards are not applicable.

Section 7B—Locally Written Instructions

7.2. Locally Written Instructions. All explosives operations must be conducted in accordance with written instructions. Item TOs generally fulfill this requirement, but may not address all local conditions. Locally written instructions may be required to address the items in paragraph 7.3. Locally written instructions may take the form of crew briefings, safety briefings, local operating instructions, etc. The items in paragraph 7.3 may be addressed by one or more of these methods.

7.2.1. Locally written instructions will be:

7.2.1.1. Approved by the squadron commander or equivalent.

7.2.1.2. Coordinated with the weapons safety office and all other involved organizations.

7.2.1.3. Available at the work site.

7.2.1.4. Written in the language workers understand.

7.2.1.5. Briefed to all workers prior to beginning an explosives operation. Ensure workers understand the instructions prior to beginning the operation.

7.2.2. Locally written instructions are not required for EOD emergency operations in connection with approved render safe procedures.

7.2.3. Locally produced checklists and work cards concerning nuclear operations require approval according to TO 00-5-1, *Air Force Technical Order System*.

7.2.3. **(ACC)** Send through command channels to HQ ACC/SEW for coordination and approval.

7.2.4. Locally produced operating instructions will be developed and processed according to AFI 33-360, *Publications and Forms Management*.

7.2.5. **(Added-ACC)** Any inerting procedures to be conducted by Explosive Ordnance Disposal (EOD) units will be first approved locally by the squadron commander, base environmental, and Wing Safety, using the procedures in para 7.2. and 7.3. of AFMAN 91-201. Forward procedures to the ACC Explosives Ordnance Disposal Branch (HQ ACC/A7XE) prior to commencing inerting operations, who in turn will provide their concurrence/approval to the ACC Munitions Division (HQ ACC/A4W) and HQ ACC/SEW for final approval. An inert munition is authorized only if required to support an official

mission objective when the support cannot be provided by Air Force Material Command (AFMC) or the System Program Office (SPO).

7.3. Contents of Locally Written Instructions. Include the following information, as applicable, in locally written instructions. The MAJCOM will determine if additional items are required.

7.3.1. Personnel limits (see paragraph 7.5.).

7.3.2. Explosives limits, including HD and CG of the explosives involved (see paragraph 7.6.).

7.3.3. Exact locations where operations will be done.

7.3.4. Safety requirements, to include special requirements for personal protective clothing and equipment.

7.3.4. **(ACC)** Ensure personnel handling and grounding requirements in AFMAN 91-201 para 7.13. are addressed in operating instructions (O.I.) if electro-explosive devices (EED) are stored or handled (to include in licensed locations). O.I.s will also include requirements to verify inspections and tests are current on the grounding systems being used.

7.3.5. Step-by-step procedures for doing the task (refer to specific steps in the TO for applicable portions of the operation).

7.3.6. Actions to be taken during an emergency.

Section 7C—General Requirements for Operations Involving Explosives

7.4. Personnel Qualifications. Personnel who work with explosives will be trained in accordance with AFI 91-202, *The US Air Force Mishap Prevention Program*, and qualified in the tasks to be performed. They must understand all safety standards, requirements, and precautions that apply to the operation. The supervisor must be knowledgeable of all hazards involved in the operation, convey emergency procedures to workers, casuals, and visitors, and maintain strict housekeeping standards. The supervisor must also know what steps to take when abnormal conditions arise.

7.4. (ACC)Personnel Qualifications. Units managing explosives storage locations (including licensed locations) will give safety briefings to all personnel who are exposed to the hazards of explosives in their work-center. Safety briefings will at minimum cover hazards in the immediate area, evacuation distances, cell phone and radio communications, and other pertinent information unique to the location.

7.5. Personnel Limits. Design explosives operations to ensure minimum exposure of personnel to explosives, in compliance with the cardinal principle (see paragraph 1.1.2). Supervisors are responsible for enforcing personnel limits.

7.5.1. **Buddy System.** Good industrial safety practices may dictate use of the buddy system even though only one person may be required to perform the work. Use of the buddy system does not violate the cardinal principle.

7.5.2. **EOD Procedures.** Performance of EOD procedures requires a minimum of two EOD-qualified people (one worker and one for safety back-up and to detect errors in

procedures). If sent on a mission where performance of EOD procedures is likely, use a minimum of two EOD-qualified people. One EOD-qualified person (with an appropriate safety back-up capable of rescue actions) can provide site assessments, evaluations, and other on-site analysis as long as no procedures are performed and ordnance or explosives are not disturbed.

7.5.3. **Casuals.** Casuals are persons not normally part of an explosives operation but have duties that require their presence, such as quality assurance, medical, safety or inspection personnel. **Note:** When conducting intentional detonation operations,(e.g., EOD operations, range clearance, or other demolition and munitions destruction) emergency medical support must be available within 30 minutes while the operations are being performed. The medical support must be analogous to the expected trauma resulting from an accident.

7.5.4. **Visitors.** Visitors are non-essential personnel with limited access. Stop operations when visitors are present.

7.5.5. **Posting Personnel Limits.** Clearly post personnel limits for the operations being conducted at each explosives operating location. Posted limits will distinguish between supervisors, workers, and casuals. Locally written instructions containing personnel limits will suffice in lieu of posting.

7.5.5.1. Do not post personnel limits at aircraft parking locations, even if used for uploading or downloading explosives.

7.5.5.2. Do not post personnel limits at storage locations or licensed explosives storage locations.

7.6. Explosives Limits. Design explosives operations to ensure minimum exposure of personnel to explosives in compliance with the cardinal principle (see **paragraph 1.1.2**). Only the explosives needed to ensure a safe and efficient work flow will be present in an operating location when operations are being conducted; this should normally be limited to a one day supply. Attempt to comply with compatibility group mixing requirements (see Section 7K), if possible, to minimize the likelihood and severity of a mishap. Supervisors are responsible for enforcing explosives limits.

7.6.1. **Posting Explosives Limits.** Clearly post the authorized HD and NEWQD at all explosives locations, to include MCE for HD 1.2.1, NEWQD of the largest single round for HD 1.2.3, and (xx) for HD 1.2.3. A properly displayed explosives license (see Chapter 11) fulfills this requirement for licensed explosives storage locations. For all other explosives storage locations, locally written instructions (see Section 7B) containing authorized HD and NEWQD will suffice if posting is impractical. Locally written instructions containing HD and NEWQD will suffice in lieu of posting for all explosives operating locations.

7.6.2. **Posting Operating Limits.** For explosives operating locations, clearly post the HD and NEWQD limits (to include MCE for HD 1.2.1, NEWQD of the largest single round for HD 1.2.3, and (xx) for HD 1.2.3) for the operation being conducted, if less than the authorized explosives limits. These limits may be expressed in terms of the specific explosives items, such as “two AIM-9 missiles.” Locally written instructions (see Section 7B) containing HD and NEWQD will suffice in lieu of posting.

7.7. Housekeeping. The following are minimum precautions:

7.7.1. Non-explosives Waste Materials.

7.7.1.1. Do not commingle non-explosives waste materials (e.g., oily rags, combustible scrap, wood, paper, and flammable packing materials) with explosives residue.

7.7.1.2. Place non-explosives waste materials in approved, properly marked containers.

7.7.1.3. Place non-explosives waste material containers outside of explosives facilities, except for containers required at work locations during operations.

7.7.1.4. Empty non-explosives waste material containers at working locations as often as needed, but at least once each workday or shift.

7.7.1.5. Contact the base environmental management office for additional guidance for hazardous materials.

7.7.2. **Explosives Residue.**

7.7.2.1. Provide grounded, covered, self-closing containers for explosives residue and materials containing explosives residue (e.g., rags, clothing).

7.7.2.2. Cover explosives residue and waste materials containing explosives residue with water or oil, if this does not add to the hazard. Number 10 mineral oil is useful for covering pyrotechnic, tracer, flare, and similar mixtures. If using water, immediately immerse the items to reduce production of dangerous gases.

7.7.2.3. Remove explosives residue and materials containing explosives residue at frequent intervals and before leaving at the end of the duty day or shift. Place in the disposal area or an isolated temporary collection point.

7.7.2.4. When using isolated temporary collection points, set up time and quantity limits to ensure timely movement of collected material to the disposal area. Do not store collected material in the disposal area.

7.7.2.5. Dispose of explosives residue and materials containing explosives residue in accordance with environmental standards and locally written instructions (see Section 7B) approved by the base environmental management office.

7.7.3. Cleaning Compounds.

7.7.3.1. Do not use cleaning compounds containing wax or oil on conductive floors or surfaces.

7.7.3.2. Do not use cleaning agents that include caustic alkalis in locations containing explosives residue (sensitive explosives compounds may be formed).

7.7.3.3. Remove explosives residue in accordance with the item TO.

7.7.3.4. Use non-abrasive cleaning compounds; such compounds are often combustible but not volatile. Closed cup flash point of cleaning compounds must not be less than 230° F.

7.8. Smoking. AFOSH 91-100, *Aircraft Flight Line - Ground Operations and Activities*, Chapter 1, governs smoking on the flightline. For all other explosives locations, the following requirements apply:

7.8.1. Allow smoking in an explosives storage area or operating location only in specifically designated locations, where "authorized smoking areas" signs are posted.

7.8.2. A "No Smoking Except in Designated Areas" or "No Smoking" sign will be posted at each entrance to an explosives storage area.

7.8.3. In an explosives storage area or operating location containing exposed explosives, include a notice that flame-producing devices must be turned over to the entry controller or placed in a container provided.

7.8.4. **Requirements for Designated Smoking Locations.**

7.8.4.1. Do not place within 50 feet of any explosives locations (to include conveyances or material handling equipment loaded with explosives items).

7.8.4.2. Coordinate proposed location with weapons safety, and obtain installation fire chief or delegate approval. Approval will address whether a fire extinguisher must be available. Display a certification of approval in each designated smoking location.

7.8.4.3. Provide suitable self-closing or self contained properly marked receptacles for extinguishing smoking materials.

7.8.4.4. Provision of an electrical push-button type lighter that cuts off when pressure is released, or when the lighter tips over, is recommended.

7.8.4.5. Persons wearing clothing contaminated with flammables, explosives or other hazardous materials are not allowed in designated smoking areas.

7.8.5. Do not smoke in, on, or within 50 feet of any conveyance or material handling equipment loaded with explosives items.

7.9. Handling of Explosives. This paragraph applies to the handling of explosives and movement of explosives within the immediate vicinity of an explosives operation.

7.9.1. Only trained personnel under the supervision of an individual who understands the hazards and risks involved in the operation are to handle explosives.

7.9.2. Handle detonators, initiators, squibs, and other such electrically or mechanically initiated devices in protective containers during storage, transportation, and inspection. Use containers designed to prevent item-to-item contact. Mark to identify the contents.

7.9.3. Do not use bale hooks to handle explosives.

7.9.4. Do not use nails to secure covers or make repairs on explosives containers unless there is no hazard to the explosive item or danger of penetrating protective coverings. Exercise special care when using pneumatic- or cartridge-activated nail guns (see AFI 21-201, *Conventional Munitions Maintenance Management*).

7.9.5. Do not tumble, drag, drop, throw, roll, or "walk" munitions. Containers designed with skids may be pushed or pulled for positioning.

7.9.6. Do not roll un-palletized conventional high explosive bombs or other explosives unless authorized by the item TO and lugs or other projections have been removed or if they are protected by dunnage rails.

7.9.7. Do not use conveyors, chutes, hand trucks, or forklifts in atmospheres and locations where they will create hazards.

7.9.8. Interlock and support sections of roller conveyors used to move explosives. Do not use boxes containing explosives or munitions to support conveyors.

7.9.9. Always consider vehicle and handling equipment type, type of load, and prevailing weather and surface conditions when determining if safe movement is feasible.

7.9.10. Restraining devices designed for use with vehicle and handling equipment will be used in accordance with applicable TOs.

7.9.11. Do not move explosives rapidly across any non-conductive surface.

7.10. Portable Equipment.

7.10.1. Ensure portable electronic equipment introduced to a hazardous location meets the requirements of paragraph 5.4.

7.10.2. UL-listed floodlight systems, mounted on heavy portable stands and placed outside the magazine door or the outdoor working area, may be used where required. Service cords must be placed or protected so that they cannot be walked on or run over by equipment.

7.10.3. Flexible cords should be type SO hard service cord. Splices are not allowed. All flexible cords, receptacles, and attachment plugs must be equipped with three prongs so that the third prong (green wire) acts as ground. Place or protect each electrical cord so that it cannot be walked on or run over by equipment. Flexible cords will not be used in place of fixed or installed electrical wiring. Damaged flexible cords will be immediately removed from service.

Section 7D—Static Grounding

7.11. Static Electricity. Static electricity is created when two different materials come in contact and then are separated again; this includes when the two materials are rubbed against each other. Separated charges accumulate on the two materials, creating a voltage potential that can be discharged when either of the materials is moved close to an uncharged or grounded object. This discharge can cause a mishap if it occurs through, or in the presence of, a hazardous substance susceptible to electrostatic initiation. For this reason, precautions shall be taken against performing unnecessary actions that lead to the buildup of static voltages, actions shall be taken to avoid the prolonged storage of static voltages on personnel or equipment, and actions shall be taken to discharge static voltages in a safe and controlled manner during operations involving explosives. See Section 5E for the static grounding and bonding system design and inspection requirements.

7.12. Requirement for Static Grounding. See paragraph 7.15 for static grounding techniques and paragraph 7.16 for methods to reduce the buildup of static electricity. Static grounding is required for:

7.12.1. Personnel, equipment, and explosives, when the responsible engineering function has determined grounding is necessary for specific maintenance or electrical test operations; grounding requirements will normally be included in the item TO.

7.12.2. Weapons systems in storage as required in the item TO.

7.12.3. Personnel and equipment in hazardous locations (see Section 5C).

7.12.4. Personnel handling EEDs (see Electro-Explosive Device in Attachment 1). Note: Always avoid directly touching an electrical primer. See **paragraph 7.13** for static grounding requirements for handling unpackaged EEDs.

7.12.5. Personnel handling exposed explosives (see exposed explosives in Attachment 1); this does not apply to C-4.

7.12.6. Explosive components which incorporate an electrical initiating system when undergoing maintenance; assembly to, or disassembly from, an all-up-round (AUR) configuration; or electrical connection or disconnection. **Note**: Unless required by TO, static grounding is not required when replacing components of AURs which incorporate an electrical initiating system when the replacement operation does not require electrical connection or disconnection.

7.12.7. Aircraft, when explosives are being loaded or unloaded, as required in paragraph 7.14.

7.13. Static Grounding for Handling Unpackaged EEDs. When EEDs are unpackaged and handled follow item TO requirements for static grounding and comply with the following:

7.13.1. Personnel must periodically ground themselves. Post signs at entrances and in the room reminding personnel that periodic grounding is required, except where compliance would create any additional personnel safety hazard. Install one or more static grounding bars or device (see **paragraph 5.12.2**) and require personnel to touch the grounding device before handling the EED and at frequent intervals while working to discharge any static potential.

7.13.2. Where feasible, comply with paragraphs 7.15.1.1 and 7.15.1.3.

7.13.3. Adhere to the precautions in paragraph 7.16.

7.13.4. Every person who handles exposed EED's must be careful not to allow the EED's electrical contacts to touch any of the metal surfaces of aircraft and missile skin or structure. Additionally, the handler must actively take precautions against allowing the build up or discharge of static electric energy through the EED's electrical contacts.

7.14. Static Grounding for Aircraft During Explosives Loading and Unloading. Combat and cargo aircraft will be grounded during explosives loading or unloading operations, except as noted in paragraphs 7.14.1 and 7.14.2. See TO 00-25-172, *Ground Servicing of Aircraft and Static Grounding/Bonding* and applicable aircraft TO for grounding procedures. Personnel handling the explosives will equalize their static electrical potential to that of the aircraft, vehicle or handling equipment, before beginning operations and at frequent intervals thereafter to discharge any static buildup. Ensure the aircraft being loaded or unloaded is not within the hazard zone of any operating transmitters (see Chapter 9).

7.14.1. Cargo aircraft do not require grounding during engine running on/off (ERO) operations.

7.14.2. Grounding of aircraft during explosives loading or unloading is recommended but not required where there are unusual parking problems in operating from bare or limited bases, nonmilitary airfields, host nation airfields, etc. This exception does not relieve

commands from responsibility for providing proper grounding in locations where operations continue or where parking facilities are required on a recurring basis. Where static grounding facilities are not available at a suitable parking location, commands should use the best alternate method of reducing the hazard in the following order or precedence:

7.14.2.1. Keep static grounding to 10,000 Ohms or less by using ground rods.

7.14.2.2. Equalize the static electrical potential between the aircraft and the vehicle or handling equipment used in loading or unloading by bonding them together with an approved static ground wire, cable, or strap (see paragraph 5.14). **Note:** It might not be feasible to bond the handling equipment to the aircraft if the handling equipment must move during the operation.

7.15. Static Grounding Techniques. In the absence of TO guidance, this paragraph provides techniques for accomplishing static grounding (see **paragraphs** 5.13 through 5.15 for further guidance).

7.15.1. Protective clothing is not a substitute for personnel static grounding. Static grounding of personnel will be accomplished by any of the following:

7.15.1.1. Through the use of wrist-straps connected to the facility ground.

7.15.1.2. By periodically touching a grounded surface (such as an airframe) or a grounding bar.

7.15.1.3. By wearing conductive footwear on conductive floors, mats or runners (see Section 5F), if the floor, mat, or runner is properly grounded.

7.15.2. Static grounding of equipment will be accomplished by any of the following:

7.15.2.1. Through the use of a static ground wire, cable, or strap (see paragraph 5.14) between the item to be grounded and the facility ground.

7.15.2.2. By using conductive tabletops, or conductive material coverings on the tabletop, if the conductive surface or material is properly grounded.

7.15.3. When making a grounding connection, attach the ground wire, cable, or strap to the item requiring grounding first, then connect the other end of the ground wire, cable, or strap to the approved facility grounding system. This ensures that if a spark occurs, it will occur at the connection to the facility grounding system instead of at the item.

7.15.3.1. If the existing static grounding or bonding reels were permanently attached to the facility ground when installed, a temporary grounding connection using an additional cable should be made first (when possible) following the procedure in paragraph 7.15.3 before connecting the item to the permanent system.

7.15.3.2. When static grounding or bonding reels are installed, either in new or existing facilities, do not permanently attach them to the facility grounding system.

7.15.4. When a different or new ground is needed for an item, always make the new ground connection first (in the same manner as described in paragraph 7.15.2) before disconnecting the existing ground connection (make-before-break grounding). This ensures that the item will be grounded at all times while transitioning from one ground connection to another.

7.16. Methods to Reduce the Hazards of Static Electricity. Personnel can minimize the possibility and severity of both the buildup and discharge of hazardous static electric potentials by observing the following guidance.

7.16.1. Whenever possible, personnel should avoid using rags or wearing outer garments made of materials which have high static-generating characteristics (e.g., 100% polyester, nylon, rayon, silk, wool, etc.). Wool socks, glove inserts, and caps as well as undergarments of synthetic fabrics are less of a hazard than outer garments such as jackets or pants.

7.16.2. Whenever possible, personnel should use rags or wear outer garments made of cotton or a cotton-synthetic blend.

7.16.2.1. Clothing materials acceptable for flightline use (per Allowance Standard 016, *Special Purpose Clothing and Personal Equipment*) are acceptable for handling munitions; this includes Gortex even though it is 100% nylon.

7.16.2.2. When clothing is worn which has a high static-generating characteristic, such as Gortex or some flak vests, the techniques listed for controlling the discharge of any generated potentials shall be further emphasized.

7.16.3. Minimize exposure to conditions which aid the buildup of static electricity such as cold, dry climates or dry, windy climates.

7.16.4. Minimize activities which aid the buildup of static electricity such as physical motion or contact with moving non-conductive substances.

7.16.5. Control the discharge of any generated static electric potential by touching a static grounding bar or device (or by equalizing it to that of the system being handled) prior to touching the system and at frequent intervals during operations.

7.16.6. Minimize activities which can cause an uncontrolled discharge of static electric potential such as the quick or repeated removal of outer garments.

Section 7E—Testing, Procedures Verification, Disassembling and Modifying Explosives Items

7.17. Requirements for Test, Disassembly, and Modification of Explosives Items.

7.17.1. Modify, test, or disassemble explosives items only under the following circumstances:

7.17.1.1. When authorized by item TO.

7.17.1.2. When MAJCOM and either the Air Force Materiel Command (AFMC) item manager or System Sustainment Manager (SSM) grant approval.

7.17.1.3. When EOD personnel perform render safe operations, technical intelligence gathering, or for special projects authorized per AFI 32-3001, *The Air Force EOD Program*.

7.17.2. Allow only technically qualified personnel to test, disassemble, or modify explosives items.

7.17.3. Before starting operations, supervisors must ensure all requirements of Section 7B have been met.

7.17.4. Dry run all new procedures with inert or simulated explosives items when possible.

7.17.5. Handling new or test munitions (versus operational munitions) requires personnel certification. Use inert items when possible for certification.

7.17.6. Suspended munitions (code condition J) must not be used unless specifically authorized by the item manager for:

7.17.6.1. Dry runs.

7.17.6.2. Personnel or test procedure certification, verification, or validation.

7.17.6.3. Electrical testing of aircraft or other weapons systems.

7.17.7. Comply with paragraph 7.18 for electrical testing of explosives items.

7.17.8. Comply with paragraph 7.19 for weapons system testing involving live explosives.

7.17.9. Comply with paragraph 4.17 to determine the need for protective shielding and remotely controlled operations.

7.18. Electrical Testing of Explosives Items.

7.18.1. Follow instructions in specific weapon or weapons system TOs for testing individual explosives items or weapon systems containing explosives items. Where there is doubt about the safety or adequacy of any test procedure or instrumentation, submit a request to the responsible technical agency (prime AFMC element) for advice or assistance.

7.18.2. Ensure electrical test equipment introduced to a hazardous location meets the requirements of paragraph 5.4.

7.18.3. In developing specific weapon and weapons system TOs, the responsible engineering function should consider the following guidance:

7.18.3.1. Electrical or electronic test equipment should normally use the weakest possible power source. If feasible, require the use of battery-powered equipment instead of a 110-volt source.

7.18.3.2. The test power source should be incapable of initiating the explosive item being tested. Where greater power must be used, provide positive safeguards to prevent delivery of enough power to initiate the item.

7.18.3.3. Unless the test equipment is incapable of initiating the item being tested, operational shields (see **paragraph 4.17**) should be provided, where needed, to protect personnel from injury.

7.18.3.4. Special attention should be given to the ventilation requirements of equipment containing vacuum tubes and the possibility of malfunction of equipment using resistors and other devices for limiting testing power.

7.18.3.5. The explosive item, test equipment, and leads should be protected from exposure to electromagnetic (induction and radiation fields) and electrostatic energy of more than an order of magnitude less than that required to initiate an explosion (see Chapter 9).

7.19. Use of Live Explosives for Weapons System Testing. Do not use live explosives items for verification, validation, or electrical testing of aircraft or other weapons systems except as follows:

7.19.1. The conduct of research, development, test and evaluation (RDT&E) and operational test and evaluation (OT&E) flight testing or "Built-In Test" (BIT) checks or other low-current aircraft testing with live explosives installed, as long as doing so does not conflict with other applicable guidance such as T.O. 11A-1-33, *Handling and Maintenance of Explosives-Loaded Aircraft*.

7.19.2. If an inert item is available but a live item is scheduled to be used, provide MAJCOM/A4W/SEW/A3T with the test plan and a risk assessment that includes appropriate personnel protection (see Section 4F) for their approval.

7.19.2. **(ACC)** ACC POC is HQ ACC/SEW.

7.19.3. If an inert item is not in the inventory and a live item must be used, tests will only be performed by qualified personnel with test squadron commander approval. Coordinate test plans with the weapons safety office.

7.19.4. If an inert item is not in the inventory and a live item must be used, operational command personnel can perform the test provided approval is obtained from, and the test plan and a risk assessment (including appropriate personnel protection) is approved by MAJCOM/A4W/SEW/A3T (see Section 4F).

7.19.4. **(ACC)** ACC POC is HQ ACC/SEW.

Section 7F—Requirements for Specific Situations

7.20. Places of Public Assembly. In-use small arms ammunition HD 1.4S may be carried into places of public assembly. Because of varying circumstances, authorization to carry all other in-use AE (except HD 1.1) into places of public assembly will be determined by MAJCOM and incorporated into the MAJCOM supplement to this Manual. HD 1.1 AE will not be taken into places of public assembly except when required by immediate security needs.

7.20. (ACC)Places of Public Assembly. HC/D 1.2/1.3 munitions are not normally carried into public places (morale, welfare and recreation facilities, dining facilities, base exchange, etc.) for non-operational needs. If a local decision is made to pursue the possibility of allowing HC/D 1.2 or 1.3 to be carried into public places, the using organization along with the wing safety office will develop a risk management assessment (reference AFPAM 90-902, *Risk Management (RM) Guidelines and Tools*) and risk mitigation procedures to compensate for this practice. Approval authority rests with the installation commander.

7.21. Static or Public Displays.

7.21.1. Refer to AFI 11-209, *Aerial Event Policy And Procedures*, and TO 00-80G, *Make Safe Procedures For Public Static Display*, for procedures concerning display of aircraft.

7.21.2. Do not display, load, or install live explosives items on display aircraft. Do not render explosives items inert for this purpose unless authorized by the specific AFMC item manager or System Sustainment Manager (SSM).

7.21.3. Remove live or expended ammunition from aircraft gun systems or safe the gun systems mechanically and electrically before placing the aircraft on display.

7.21.4. Operational aircraft may be displayed without removing egress and aircrew flight equipment explosive components, including captive missiles with HD 1.4 items only, provided:

7.21.4.1. Proper TO safety precautions are followed.

7.21.4.2. Visiting personnel do not have access to explosives items or their actuating controls. Ensure constant surveillance of visiting personnel to prevent such access.

7.21.5. Remove ejection cartridges from external stores release systems and ensure safety pins and devices cannot be easily removed.

7.21.6. Munitions displays must be marked in accordance with TO 11A-1-53, *Identification of Empty and Inert Loaded Ammunition Items and Components*, and certified in accordance with TO 11A-1-60, *Inspection of Reusable Munitions Containers and Scrap Material*.

7.22. Fireworks Displays and Airshow Events. Commercial fireworks are extremely hazardous, even in the hands of trained experts. Safety personnel will ensure all safety requirements are provided to the base contracting office prior to the selection of the commercial firm that will be conducting the demonstration.

7.22.1. Active duty Air Force personnel (on- or off-duty) and on-duty Air Force civilian personnel must not take part in the transportation, storage, setup or functioning of commercial fireworks for on-base fireworks displays.

7.22.2. Units must contract with properly licensed commercial firms to provide all necessary transportation, storage and security, setup, and functioning of fireworks for on-base displays. Contractors must comply with safety guidelines in NFPA 1123, *Code for Fireworks Display* and AFI 91-202, paragraph 3.5, Contract Monitoring.

7.22.3. All off-base opportunities to store commercially purchased explosives intended for use in USAF sponsored (on-base) air-shows must be exhausted prior to considering use of the Munitions Storage Area (MSA) or other sited on-base facilities (see **paragraph 3.13**. and **paragraph 12.88**.). Off base storage for airshows will be at the contractors expense.

7.22.3.1. Commercial explosives must have a MSDS, DOT or other federally recognized certification identifying the items HD and NEW.

7.22.3.2. Commercial explosives must be packaged in the original shipping configuration.

7.22.3.3. Commercial explosives will be physically segregated in storage from DoD explosives.

7.22.3.3. **(ACC)** Explosives will remain in storage/transportation configuration until arrival at detonation site.

7.22.3.4. Commercial explosives will be handled, stored and transported by the commercial firm responsible for the explosives demonstration. Munitions personnel will only escort contract personnel to/from the storage facility and open the facility for contractor access.

7.22.4. Commercially purchased explosives will not be handled or transported by DoD (civilian or military) personnel on or off-duty. Exception: EOD personnel providing emergency assistance (life saving attempts or in order to preserve high value military resources or when operating under specific approval from MAJCOM).

7.22.5. Commercial firms responsible for the explosives demonstration must be properly licensed and insured.

7.22.5.1. Commercial firms will comply with all established DoD safety regulations.

7.22.5.2. Commercial firms will take all unused and expended munitions items with them off-base at the completion of the demonstration.

7.22.5.3. Commercial firms will ensure fire extinguishers and properly equipped vehicle for explosives transportation are provided.

7.22.6. Demonstration site will meet the requirements of paragraphs 7.23., 12.73.,12.74. and the following:

7.22.6.1. Will be freshly mowed or pre-burned within 48 hours of the demonstration.

7.22.6.1.1. If the area is mowed, it is highly recommended the demonstration area be saturated with water the night prior to the show.

7.22.6.1.2. Area will be inspected for rock and other debris which could contribute to a secondary fragment hazard. Items discovered will be removed from the site.

7.22.6.2. Fuel required at the demonstration site will be provided by the contractor. If USAF resources are to be used, they will be delivered in portable (fuel bowser) delivery systems prior to the explosives being delivered to the site. The responsible Installation Commander must accept the risk for the loss of the fuel bowser if this option is elected.

7.22.6.3. Crowd lines for air show demonstrations will not be less than 1,250 feet from the intentional detonation site.

7.22.6.3. **(ACC)** The 1250’ crowd line should not extend beyond base boundary. If the 1250’ zone extends beyond the base boundary, that area will be treated as an exception or restrictive easement and must be addressed in the air show O.I. with appropriate documentation.

7.22.7. Installation Weapons Safety Managers with the assistance of Munitions, EOD, Base Operations, Legal and Fire Department personnel will complete a comprehensive explosives risk assessment for the scheduled explosives demonstration event and forward to the MAJCOM for approval. The assessment will include:

7.22.7. **(ACC)** Forward risk assessments to HQ ACC/SEW for coordination and approval 30 days prior to the demonstration.

7.22.7.1. A scaled map of the demonstration site with applicable safe zones depicted.

7.22.7.2. A list of all compensatory measures used in the Risk Assessment to meet required safety standards.

7.22.7.3. A list of explosives being used in the demonstration. (Nomenclature, HD and NEW, Quantity)

7.22.7.4. Scheduled sequence of events for the demonstration Cradle to grave timeline and explanation of event).

7.22.7.5. Severe weather action/evacuation plan.

7.22.7.6. Misfire or dud procedures.

7.22.7.7. Responsible Commanders acceptance of risk.

7.22.8. Over flight of the explosives demonstration site will be restricted to no closer than 500' Above Ground Level (AGL) by either DoD or commercial aircraft.

7.23. Live-fire Demonstrations.

7.23.1. For DoD-conducted live-fire demonstrations, the MAJCOM may provide additional requirements in their supplement to this Manual to ensure safety of personnel. As a minimum, address the following:

7.23.1. **(ACC)** See the requirements of AFMAN 91-201 para 7.22.7. and para **7.22.7** of this supplement.

7.23.1.1. Essential personnel required for the live-fire demonstrations.

7.23.1.2. Safety considerations (e.g., personnel withdrawal distances and acceptable exposures). Consider applying the requirements of paragraphs 12.73 and 12.74 for separation of non-essential personnel.

7.23.1.3. Risk assessment requirements (see Chapter 4).

7.23.1.4. Documentation, coordination, and approval requirements.

7.23.2. For contractor-conducted live-fire demonstrations, the MAJCOM may provide additional requirements in their supplement to this Manual to ensure safety of personnel. As a minimum, address the following:

7.23.2. **(ACC)** See the requirements of Paragraph AFMAN 91-201 para 7.22.7. and para **7.22.7** of this supplement.

7.23.2.1. Address safety considerations (e.g., personnel withdrawal distances and acceptable exposures). As a minimum, apply the requirements of paragraphs 12.73 and 12.74 except as follows:

7.23.2.1.1. Ensure the demonstration explosives are not located in an active explosives clear zone.

7.23.2.1.2. Ensure the explosives clear zone of the demonstration explosives does not encompass Air Force facilities.

7.23.2.1.3. Apply "not essential" separation criteria to all non-contractor personnel. Contractors will determine required separation and safety criteria for their own personnel.

7.23.2.2. Risk assessment requirements (see Chapter 4).

7.23.2.3. Documentation, coordination, and approval requirements.

7.24. Hunting.

7.24.1. Ensure hunting will not hazard explosives stored on open pads or in light structures.

7.24.2. Hunting may be permitted in and around the munitions storage area if PTR distance is maintained from all sited explosives facilities. This paragraph does not apply to Bird/Wildlife Aircraft Strike Hazard (BASH) and Entomology functions. The local commander issues written permission and develops local operating instructions for hunting around munitions storage areas on an installation.

7.24.3. Because of varying conditions and circumstances, procedures and additional restrictions will be determined by MAJCOM and incorporated into the MAJCOM supplement to this Manual.

7.24.3. **(ACC)** Include the following information in local instructions and coordinate it with base safety.

7.24.3.1. **(Added-ACC)** List exact areas where hunting is authorized as well as prohibited areas.

7.24.3.2. **(Added-ACC)** Provide safety requirements; include any special requirements pertaining to local conditions.

7.24.3.3. **(Added-ACC)** All hunting will conform to applicable local, state and federal regulations.

7.25. Training Involving Blank Ammunition. Firing weapons (.50 caliber or less) using blank ammunition is permitted (including within an explosives storage area) but is subject to safety/operational requirements found in the specific weapons T.O., AFMAN 31-229, *USAF Weapons Handling Manual*, and the following:

7.25.1. Develop written procedures containing the following provisions:

7.25.1.1. Use of a designated disinterested official to certify only blanks are loaded.

7.25.1.2. Provision of readily available fire extinguishers.

7.25.1.3. Misfire procedures.

7.25.1.4. Expended brass turn-in procedures.

7.25.1.5. Notification of appropriate agencies (i.e., safety, munitions flight chief, fire department, hospital, and Security Forces).

7.25.2. Coordinate written procedures with the installation weapons safety office. Obtain approval from the explosives storage area commander or flight chief when blanks are used within an explosives storage area.

7.25.3. Except for security forces conducting required training, all other training will be done at a minimum of PTR separation from sited explosives facilities.

7.26. Exercises and Training Involving Simulators and Smoke Producing Munitions. See **paragraph 11.11** for licensed explosives storage requirements for simulators and smoke producing munitions used for training and exercises. The following requirements apply to the use of these devices during exercises and training:

7.26.1. Only United States Air Force stock-listed items are authorized for use by Air Force personnel. Other military services will use DoD approved items only, when using United States Air Force ranges or facilities. Planning for joint training and exercises should ensure no exposure of Air Force personnel to non-United States Air Force stock-listed items.

7.26.2. Only trained personnel can prepare and activate these devices.

7.26.2.1. This training must be provided by qualified personnel on an annual basis.

7.26.2.2. Qualified personnel who can provide training will be determined locally but may be from EOD, munitions, or weapons safety. These personnel must have classroom instruction, pass a written test, be qualified to handle, maintain and inspect the items for which they will provide training, and be retrained annually.

7.26.2.2. **(ACC)** Qualified EOD personnel will provide initial certification for other agencies authorized to provide similar training, (i.e., weapons safety, munitions).

7.26.2.3. It is the responsibility of the user organization to request training and maintain training records.

7.26.2.4. Higher headquarters evaluation teams using these devices must present proof of training to the installation weapons safety office.

7.26.3. These devices present a fire hazard. Remove all combustible material from within a 10-foot radius of the initiation point. Consider winds and fire hazards such as dry grass or fire bans. Consider using a barrier (baffle or screen) to control the spread of heat during functioning.

7.26.4. Ground burst and hand grenade simulators also present a blast, debris or fragment hazard.

7.26.4.1. Comply with the following minimum distances unless greater separation distances are prescribed in the item TO for use of ground burst or hand grenade simulators:

7.26.4.1.1. Maintain a minimum separation of 125 feet from personnel and vehicles. Personnel who initiate these munitions may be closer than 125 feet, but they should be as close to 125 feet as possible and have their back to the munitions.

7.26.4.1.2. Maintain a minimum separation of 100 feet from facilities without a facing window.

7.26.4.1.3. Maintain a minimum separation of 200 feet from facilities with a facing window.

7.26.4.1.4. Maintain a minimum separation of 50 feet from hardened facilities, including hardened aircraft shelters.

7.26.4.1.5. Maintain a minimum separation of 200 feet from petroleum, oil and lubricants storage.

7.26.4.1.6. Maintain a minimum separation of 100 feet from aircraft in the open, or 200 feet if aircraft are explosives loaded.

7.26.4.1.7. Maintain a minimum separation of 200 feet from explosives operating locations, holding areas, open storage areas or butler-type storage facilities.

7.26.4.1.8. Maintain a minimum separation of 50 feet from above-ground magazines of block, brick, or concrete construction and from ECMs.

7.26.4.2. The required distances in paragraph 7.26.4.1 may be reduced by barriers or shields designed in accordance with UFC 3-340-02, *Structures to Resist the Effects of Accidental Explosions* or MIL-STD 398, *Shields, Operational for Ammunition Operations, Criteria for Design and Tests for Acceptance*. Provide the design criteria to AFSC/SEW for approval.

7.26.4.3. Monitor items for proper functioning, and notify EOD or other qualified personnel when an item malfunctions. The on-scene commander will determine minimum withdrawal distances for malfunctioned items; these distances will never be less than the separation distances required by paragraph 7.26.4.1.

7.26.5. Smoke-producing munitions can present a toxic hazard in high concentrations.

7.26.5.1. Comply with the item TO for separation and personnel protective equipment requirements. If no requirements are specified in the item TO, avoid the smoke or follow actions required in Table 10.3.

7.26.5.2. Contact Environmental Management and the Fire Department prior to use of these items.

7.26.6. Dispose of expended items in accordance with environmental standards and TO 11A-1-60, *General Instructions Inspection of Reusable Munitions Containers and Scrap Material Generated from Items Exposed to, or Containing Explosives*.

7.27. Training and Exercises Involving Explosives.

7.27.1. The Exercise Team Chief will prepare a plan for training and exercises involving explosives. Include weapons safety personnel in development of the plan.

7.27.1. **(ACC)** Higher headquarters (HHQ) inspection teams will follow their approved lesson plans/procedures when handling pyrotechnic simulators. HHQ Inspection teams will review local exercise plans with regard to restricted locations for actuation of simulators and smoke producing devices.

7.27.2. The plan will include:

7.27.2.1. A risk assessment (see Chapter 4) of explosives operations for the training or exercise.

7.27.2.2. A list of all explosives to be used in the training or exercise, to include NSN, HD, and explosives weights.

7.27.2.3. A detailed list of locations where explosives will be deployed for the training or exercise (see **paragraph 7.20** for restrictions on taking explosives into places of public assembly).

7.27.2.4. A procedure for accountability and reconciliation of all items used in the training.

7.27.2.5. Required separation distances per paragraph 7.26.

7.27.2.6. **(Added-ACC)** Exercise plans will include personnel protective equipment (PPE) and fire extinguishers requirements.

7.27.3. The responsible commander will approve the plan in writing, ensuring personnel not normally associated with explosives operations and exercises are not exposed to explosives hazards.

7.28. Military Working Dog Explosives. Military Working Dog explosives training aids (including HD 1.1) may be transported and handled by qualified personnel in areas that provide realistic and effective training. See AFI 31-202, *Military Working Dog Program*.

7.28.1. Preclude exposure of personnel not related to the training through prudent scheduling and selection of training sites. Provide non-essential personnel separation per paragraph 12.79.4.

7.28.2. Post proper fire symbols and explosives operation signs at training sites (see Chapter 10).

7.28.3. Train using locally written instructions (see Section 7B). These instructions must include a documented post-training inventory of explosives samples ensuring no explosives are inadvertently left at the training site or discarded.

7.28.4. Inform the weapons safety office, Fire Department, and EOD (if applicable) before conducting operations.

7.29. Repairing Containers. Except as allowed in paragraph 7.32, do not repair containers of explosives in storage facilities which contain other explosives.

7.30. Remotely Controlled Operations. Provide personnel protection per paragraph 4.17 and site per Chapter 12. Develop locally written instructions (see Section 7B) to ensure operations are terminated when operating or related personnel must perform duties at distances or locations which do not provide the required protection.

7.31. Flightline Munitions Holding Areas. Identify these areas by a physical boundary (such as rope and stanchions). Post signs to keep unauthorized personnel out of the area and to prohibit smoking within 50 feet. Post explosives limits and ensure authorizations are not exceeded. Provide fire extinguishers and post fire symbols. If providing permanent shelter for personnel, position missiles so the shelter is out of radial alignment with the warheads. Secure according to AFI 31-101 and DoD 5100.76-M, *Physical Security Of Sensitive Conventional Arms, Ammunition, And Explosives,* or return munitions to MSA for storage.

Section 7G—Operations in Explosives Storage Spaces

7.32. Operations in Explosives Storage Spaces Containing Explosives. AE containers will not be opened for the purpose of issuing items from storage locations. The following operations are authorized in explosives storage spaces:

7.32.1. Palletizing, removing and replacing shipping crates incidental to transportation.

7.32.2. Replacing unserviceable strapping on boxes.

7.32.3. Necessary functional testing or sampling specifically authorized by technical data for performance in a storage location (e.g., example checking color-coded humidity indicators). Testing engineers will coordinate proposed testing and sampling authorizations with the NNMSB.

7.32.4. Opening bolted or latched special storage containers housing self-contained weapons or missiles for authorized testing, missile reprogramming, sampling or transfer to transport trailer or vehicle, and installing control surfaces and argon bottles on AIM-9 series missiles.

7.32.5. Minor repair, cleaning, painting or re-stenciling of AUR or containers. Solvents and paints used must not create a hazardous atmosphere (see chapter 5) within the storage space. Bioenvironmental or fire department services will evaluate the potential for hazardous atmospheres.

7.32.6. Removing bomb or CBU fuze well plugs for inspection if they can be easily unscrewed as prescribed in the TO. Remove plugs from the storage location for cleaning. If the plug binds or there is evidence of exposed explosives, move bombs to an operating location before starting repairs. Clean threads and cavities with approved cleaning solvents.

7.32.7. Opening outer containers to remove inner packages. Complete any further processing of these items in an approved operating location.

7.32.8. Opening "lite" boxes for inventory purposes.

7.32.9. Opening containers of HD 1.4 explosives to allow inventory. Unpack, inspect, and repack in the storage location if building content is limited to HD 1.4 items.

7.32.10. Install only those fuzes authorized for prefuzing by TO 11A-1-63, *Munitions Assembly Procedures, Inspection and Assembly of Non-nuclear Munitions*, in the storage facility. Before moving prefuzed bombs, inspect for safe configuration.

7.32.11. Some repairs and minor modifications of large missile motors may be accomplished in missile storage facilities. A risk assessment, reviewed by weapons safety, must be accomplished showing the risk to move the motor is greater than the risk to perform the work in the storage location (see **paragraph 4.3**).

7.32.12. Nuclear weapons maintenance in a WSV-configured HAS or PAS, consistent with applicable weapon system safety rules.

7.32.13. Other operations as approved by AFSC/SEW based on a risk assessment and mission requirements (see Chapter 4).

7.32.13. **(ACC)** Send requests and risk assessments through command channels to HQ ACC/SEW.

Section 7H—Procedures in the Event of Electrical Storms

7.33. Local Lightning Warning System. Local base weather stations provide lightning watch and warning support for the installation to allow units time to take precautionary measures. Supervisory personnel will consult with the supporting weather unit and/or review the local weather support plan to ensure watches/warnings provide coverage for their working areas and become familiar with the base notification processes.

7.34. Procedures in the Event of Lightning. The following guidelines apply when a lightning watch or warning is issued for the base:

7.34.1. A *Lightning Watch* will be in effect 30 minutes prior to thunderstorms being within a 5 nautical mile (nm) radius of the predetermined location.

7.34.1.1. Initiate controlled termination procedures for all explosives operations at outdoor locations equipped with an LPS, at locations (outdoor and indoor) not equipped with an LPS, and facilities containing exposed explosives, explosive dust, or explosive vapor.

7.34.1.1. **(ACC)** Operations will be terminated efficiently and safely. Do not begin new operations while in a lighting watch status.

7.34.1.2. Deleted.

7.34.2. A *Lightning Warning* will be in effect whenever any lightning is occurring within a 5 nm radius of the predetermined location.

7.34.2.1. Immediately provide personnel protection equivalent to PTR distance from explosives facilities containing exposed explosives, explosive dust, or explosive vapor, regardless of whether the facility is equipped with an LPS; this includes providing protection equivalent to PTR for all locations within the PTR arc. PTR distances will be based on airblast overpressure only (minimum fragment distances do not apply).

7.34.2.2. Explosives operations in facilities equipped with an LPS (including HAS/PAS/WMT) may continue (except where noted in paragraph 7.34.2.1.); however, assess the need and urgency for doing so. Operations involving exposed EEDs shall cease and the maintenance bay where these operations are located shall be vacated. Evacuation of the non-maintenance administrative areas is not required.

7.34.2.3. Deleted.

7.34.2.4. Immediately provide personnel protection equivalent to PTR distance from explosives locations (indoor and outdoor, to include parked explosives-laden conveyances and flightline PES locations) which do not have an LPS; this includes providing protection equivalent to PTR for all locations within the PTR arc of a facility which does not have an LPS. PTR distances will be based on airblast overpressure only (minimum fragment distances do not apply).

7.34.2.5. When intercontinental ballistic missile (ICBM) operations cannot be immediately evacuated, e.g. due to protection level resources or a transporter-erector being in its upright position and the missile being raised or lowered, technical orders should be used to ensure the safety and security of personnel and weapons.

7.34.2.6. Cease all explosives operations at outdoor locations equipped with an LPS and not specifically mentioned in the paragraphs above.

7.34.3. See section 5H for additional LPS information.

Section 7I—Explosives Storage Requirements

7.35. Selection of Explosives Storage Method.

7.35.1. ECM storage is preferable for all types of explosives (see Section 6C). From an explosives safety and reliability standpoint, priority will be given to the use of ECMs for items requiring protection from the elements, long-term storage, or high security protection.

7.35.2. Indoor storage is preferable for all types of explosives and is mandatory for bulk high explosives, solid propellants and pyrotechnics, except as allowed by paragraph 7.40.2.2.

7.35.3. Outdoor storage is considered a temporary expedient. Use only when approved by the MAJCOM, or as allowed per Section 6D barricaded modules.

7.35.3. **(ACC)** HQ ACC/A4W and HQ ACC/SEW approves the types of munitions assets authorized for outdoor storage. Request for outdoor storage must be properly coordinated at wing level and include:

7.35.3.1. **(Added-ACC)** Quantity and type of munitions.

7.35.3.2. **(Added-ACC)** Packaging configuration.

7.35.3.3. **(Added-ACC)** A new or previously approved explosives site plan.

7.35.3.4. **(Added-ACC)** Required duration of outside storage.

7.35.3.5. **(Added-ACC)** Corrective actions or programs initiated to provide proper indoor storage.

7.35.4. Where outdoor storage is approved, consider the use of barricaded open storage modules for high-density storage in a limited land area (see Section 6D).

7.35.5. Any magazine or warehouse-type building that gives protection from the weather and meets QD and security requirements is allowed for storing explosives HD 1.3 and 1.4 material.

7.35.6. Units may use other types of standard magazines which are built according to approved drawings. MAJCOMs may approve use of existing magazines of other descriptions (including contractors' facilities) if they provide the proper degree of protection and safety.

7.36. Explosives Storage in Operating Locations. Explosives may be stored in an operating location when operations are not being conducted, provided all other storage criteria are met.

7.36. (ACC)Explosives Storage in Operating Locations. Storage in an operating building is permitted under the following circumstances/ conditions.

7.36.1. **(Added-ACC)** The munitions storage area flight chief/commander deems overnight storage in operating locations necessary to meet mission requirements and prevent unnecessary delays caused by repeated warehousing of material.

7.36.2. **(Added-ACC)** Overnight storage will be limited to one shift working quantity.

7.36.3. **(Added-ACC)** Approved explosives limits will not be exceeded.

7.36.4. **(Added-ACC)** All applicable security requirements can be met.

7.37. Explosives Storage Facility Maintenance.

7.37.1. Practice good housekeeping in all locations.

7.37.2. Keep structures in good condition and suitable for the storage of munitions types and hazard divisions involved.

7.37.3. Certain items which contain explosives have stringent temperature limitations (see applicable TO). Take precautions to ensure these limits are not exceeded.

7.38. Explosives Stocks Maintenance.

7.38.1. Keep outer containers in good condition and securely closed.

7.38.2. Stacks of containers must be stable and arranged in magazines or other approved locations according to storage drawings or directives.

7.38.3. Provide ventilation when required by civil engineering, logistics and health directives.

7.38.4. Block storage is allowed if stack ventilation is maintained when required by civil engineering, logistics or health directives.

7.38.5. Maintain aisles so each stack may be inspected.

7.38.6. **Inert and live AE or munitions components may be stored together.** However, training items must be physically separated from the live items they represent.

7.39. Marking of Explosives Stocks.

7.39.1. Keep boxes properly closed and clearly marked to show contents and quantity. Requirements of TO 11A-1-10, *General Instructions--Munitions Serviceability Procedures* and the item TO apply.

7.39.2. For dangerously unserviceable, unserviceable, or suspended lots, mark each package or stack to show its exact status. The markings must be clear to prevent inadvertent issue or loss of information.

7.39.3. Properly packed AE may not be stored with loose AE items, single inner packages (nonmetal), or explosives in unserviceable containers.

7.39.4. Properly packed AE may be stored with nonstandard boxes of AE in accordance with the CG.

7.40. Munitions in Austere Areas.

7.40.1. The austere area provisions of paragraph 7.40.2 for explosives storage areas are authorized for use in:

7.40.1.1. All zones where hostilities exist.

7.40.1.2. Areas approved by Pacific Air Forces (PACAF), United States Air Forces in Europe (USAFE) and United States Central Command Air Forces (AFCENT), where arrangement under paragraph 13.5 will allow their application.

7.40.1.3. All bare or limited bases.

7.40.1.4. Other areas as may be approved by AFSC/SEW.

7.40.2. Austere Area Provisions.

7.40.2.1. Minimum separations should prevent simultaneous detonation of explosives on opposite sides of an approved barricade and minimize the possibility of later, non-simultaneous propagating explosions. Use greater separations where possible.

7.40.2.2. Open storage is authorized for all HD of munitions and explosives. Give priority for cover to items requiring protection from the elements, considering the type of packing material involved.

7.40.2.3. Avoid single stacks of large quantities of mass-detonating explosives. Smaller stacks may limit losses due to accident or enemy action and often result in decreased land area requirement. Smaller stacks reduce the distance required between the explosives storage area and other exposures, such as flightline areas, inhabited buildings, or bulk petroleum, oils, and lubricants (POL) storage.

7.40.2.4. When normal aboveground magazine separation is not feasible, use barricaded open storage modules (see Section 6D). Large quantities of explosives may be stored in this manner with relative safety.

7.40.2.5. If land is scarce and covered storage is required, consider the use of approved steel arch ECMs. These sectionalized, corrugated-arch structures allow storage of maximum amounts of mass-detonating explosives with minimum space between ECMs. They are available in any practical length in widths up to 30 feet. The commonly-used earth cover gives acceptable protection against propagation of an explosion from one ECM to another.

7.40.2.6. Site tri-service or joint-use storage facilities using DoD 6055.09-M, *DoD Ammunition and Explosives Safety Standards*.

7.41. Privately-owned Ammunition. Privately-owned ammunition allowed on an Air Force installation (see **paragraph 3.13.1.1**) will be stored as follows:

7.41.1. Base housing residents (i.e., military families living in government-provided family housing) can store their privately-owned ammunition in their quarters.

7.41.2. Billeting and dormitory residents cannot store their privately-owned ammunition in their quarters.

7.41.3. Privately-owned ammunition stored on an Air Force installation must be stored in a licensed or sited explosives storage location (except as noted in paragraph 11.25).

7.41.3. **(ACC)** Base dormitory and billeting residents desiring to store privately owned ammunition on base will store such ammunition in the Security Forces (SF) armory.

7.41.4. Privately-owned ammunition will not be stored in a munitions storage area (MSA).

7.42. Government Arms and Ammunition. MAJCOMs may authorize the storage of DoD firearms in explosives storage areas to meet operational commitments. Refer to AFI 21-201 for general requirements.

7.42. (ACC)Government Arms and Ammunition. Send requests for joint storage of firearms with explosives to HQ ACC/SEW, for coordination with HQ ACC/A4W and ACC Security

Forces Operations Branch (HQ ACC/A7SO). Requests must include project number to correct the storage shortfall with an estimated completion date.

Section 7J—Storage and Compatibility Principles

7.43. Storage and Compatibility Principles.

7.43.1. AE may not be stored with dissimilar substances or articles (e.g., flammable or combustible materials, acids, or corrosives) that may present additional hazards to the AE unless they have been assessed to be compatible.

7.43.2. AE may not be stored with unrelated non-AE items (e.g., powered lift trucks, dunnage, empty boxes, unused pallets, excess packing material).

7.43.3. AE may be stored with related noncombustible equipment as necessary to support approved contingency or war plans requiring ready use of such equipment.

7.43.4. Not-Regulated AE and AE assigned to Classes 2 through 9 may have a CG assigned. When so assigned, the AE may be stored with Class 1 AE in accordance with the CG.

7.43.5. AE in damaged packaging, in suspect condition, or with characteristics that increase risk in storage, are not compatible with other AE and will be stored separately as CG L.

7.43.6. Treat AE received without an assigned hazard classification as HD 1.1L and place in segregated storage. Contact AFSC/SEW for assistance.

7.43.7. Segregate serviceable AE from unserviceable AE, including lots suspended from issue and use. Put them in a separate facility or segregate them physically within the same facility. If they remain in the same facility, clearly separate the unserviceable items using ropes, tape, painted lines or other highly visible means.

7.44. Found-on-Base AE. Treat *found-on-base* AE of an unknown hazard division as HD 1.1L. If local munitions or EOD technicians can identify a *found-on-base* AE item sufficiently to determine that it is the same as a stock listed, hazard classified item, then it may be stored in accordance with that hazard classification. Ball cartridges, .50 cal and smaller, and all gauge of shotgun shells, may be treated as HD 1.4C; these same items may be treated as HD 1.4S if this hazard classification can be definitely established. Recognize that unidentified AE may contain viable chemical or biological warfare agents, including recovered munitions from historic burial or off-shore disposal sites. If AE is suspected to contain chemical or biological warfare agents, activate local incident management system and wait for confirmation from the appropriate agency (Fire Department, Emergency Management, Bioenvironmental Engineering). Contact the MAJCOM Treaty Compliance Officer if the item is identified as a chemical or biological munitions item.

7.45. Dangerously Unserviceable AE. Treat dangerously unserviceable AE as CG L and store in an isolated location separated from other AE storage facilities by intermagazine distance. Dangerously unserviceable items are those which have a substantially greater probability of inadvertent or unintentional activation than a normal item. Examples: Unexploded Ordnance (UXO), discarded military munitions (DMM), and components thereof, even when rendered safe; or other unserviceable explosives or components that have undergone abnormal or unknown environments (e.g., aircraft crash, natural disaster, or other unknown conditions).

Section 7K—Mixed Compatibility Group Storage

7.46. Mixed Compatibility Group Storage. Separate storage of AE by HD and type provides the highest degree of safety. Because such storage is generally not feasible, mixed storage—subject to compliance with this Manual—is normally implemented when such storage facilitates safe operation and promotes overall storage efficiency. The CG assigned to AE indicates what can be stored with the AE without increasing significantly either an accident's probability or, for a given quantity, the magnitude of an accident's effects. AE of different CG may only be mixed in storage as indicated in Table 7.1, or as follows:

7.46.1. Compliance with compatibility and mixing requirements is desirable, but not mandatory, during contingencies, combat operations, MOOTW, or associated training.

7.46.2. AE packaged and configured for rapid response (e.g., Rapid Deployment Force) may be mixed without complying with the compatibility and mixing requirements, as operationally required to achieve the optimum load needed by the intended receiving troops. The maximum credible event allowable at any of these storage sites shall be limited to 8,818 lbs NEWQD. When computing QD requirements for such sites, Chapter 12 applies. However, the following AE will be excluded for NEWQD determination at such storage sites:

7.46.2.1. Propelling charges in HD 1.2 fixed, semi-fixed, mortar, and rocket AE.

7.46.2.2. The NEWQD of HD 1.3 items, except at sites that contain only HD 1.3 items. At such sites, HD 1.3 QD applies. (Note: In the application of this paragraph, to separate loading AE, the explosive weight of propelling charges is generally excluded when matched pairs of projectiles and propelling charges are at the site. However, if the quantity of propelling charges at the site exceeds the maximum usable for the quantity of projectiles at the site, the explosive weights of all propelling charges and projectiles at the site must be summed for NEWQD determination.)

Table 7.1. Storage Compatibility Mixing Chart.

CG	A	B	C	D	E	F	G	H	J	K	L	N	S
A	X	Z											
B	Z	X	Z	Z	Z	Z	Z					X	X
C		Z	X	X	X	Z	Z					X	X
D		Z	X	X	X	Z	Z					X	X
E		Z	X	X	X	Z	Z					X	X
F		Z	Z	Z	Z	X	Z					Z	X
G		Z	Z	Z	Z	Z	X					Z	X
H								X					X
J									X				X
K										Z			
L													
N		X	X	X	X	Z	Z					X	X
S		X	X	X	X	X	X	X	X			X	X

NOTES:

1. An "X" at an intersection indicates that the groups may be combined in storage. Otherwise, mixing is either prohibited or restricted per Note 2 below.

2. A "Z" at an intersection indicates that when warranted by operational considerations or magazine non-availability, and when safety is not sacrificed, mixed storage of limited quantities (less than 8,818 lbs total NEWQD) of some items from different groups is acceptable subject to approval from at least the munitions storage area commander. Approval must be in writing and must be kept on site. Mixed storage of items within groups where no X or Z exists at that pair's intersection, requires a deviation (see **paragraph 1.4**). Examples of acceptable storage combinations are:

a. HD 1.1A initiating explosives with HD 1.1B fuzes not containing two or more effective protective features.

b. HD 1.3C bulk propellants or bagged propelling charges with HD 1.3G pyrotechnic substances.

3. Equal numbers of separately packaged components of hazard classified complete rounds of any single type of AE (i.e., missiles, general purpose bombs, etc.) may be stored together. They may also be stored with assembled rounds made up from these components. When so stored, compatibility is that of the complete round. That is, group H for WP rounds; group D, E, or F, as appropriate, for HE rounds. (The "equal number" provision is intended to limit the material stored to enough packaged components to make up the desired number of complete rounds. It is not necessary to unpack extra components from normal packaging to make an "equal numbers" condition.)

4. CG K requires not only separate storage from other groups, but also may require separate storage within the group. AFSC/SEW will determine which items under CG K may be mixed with other items and which must be kept separate, when such a requirement develops. Request AFSC/SEW determination through MAJCOM/SEW.

5. AE classed outside Class 1 may be assigned the same CG as Class 1 AE containing similar hazard features, but where the explosive hazard predominates. Non-Class 1 AE and Class 1 AE assigned the same CG may be stored together.

6. Ammunition designated "Practice" or "Target Practice" by NSN and nomenclature may be combined with the fully-loaded ammunition that it simulates (e.g., 2.75-inch target practice rockets with WP rockets).

7. For purposes of mixing, all AE must be packaged in its standard storage and shipping container. AE containers will not be opened for issuing items from storage locations. Outer containers may be opened in storage locations for inventorying and for magazines storing only HD 1.4 items, unpacking, inspecting, and repackaging the HD 1.4 ammunition. (See **paragraph 7.32**)

8. When using the “Z” mixing authorized by Note 2 for articles of either CG B or CG F, each will be segregated in storage from articles of other CG by means that prevent propagation of CG B or CG F articles to articles of other CG.

9. If dissimilar HD 1.6N AE are mixed together and have not been tested to ensure non-propagation, the mixed AE are individually considered to be HD 1.2.1 D or HD 1.2.2 D based on their NEWQD or overriding fragmentation characteristics for purposes of transportation and storage. When mixing CG N AE with CG B through CG G or with CG S, see Section 12C to determine the HD for the mixture.

10. Articles in group L must be segregated in a separate facility or meet the requirements of paragraph 6.30 - multicubes. Group L articles are not compatible with other articles in group L unless they are identical items.

Chapter 8

EXPLOSIVES TRANSPORTATION

Section 8A—Introduction

8.1. Introduction. This chapter gives safety requirements for transporting explosives and for operating vehicles and materials handling equipment in explosives locations. In-use ammunition items that must accompany security forces or other defense forces are not governed by transportation rules. QD criteria does not apply to munitions and explosives in the transportation mode. Take precautions to ensure minimum exposure of people and property during all phases of transportation. The time munitions and explosives are in the transportation mode must be limited to the absolute minimum necessary to complete the task.

Section 8B—Explosives Transportation Standards

8.2. Federal Regulation. Title 49 of the Code of Federal Regulation (CFR) regulates commercial shipment of hazardous material, including explosives, by rail, motor vehicle, cargo aircraft and ship within the United States (except maritime explosives). Rules in Title 49 CFR only apply on military installations when specifically prescribed. For transporting explosives and munitions on an Air Force installation use the criteria is this Manual. For transporting military explosives and munitions not on an Air Force installation, but in an Air Force conveyance, operated by Air Force personnel, the rules in Title 49 CFR must be applied to the extent they are prescribed in United States Air Force and Department of Defense directives. See **paragraph 8.3** for examples, but not an exhaustive list, of such publications.

8.3. DoD Directives. In addition to this Manual, the following directives apply to military shipments of hazardous materials within the defense transportation system: AFJI 11-204, *Operational Procedures for Aircraft Carrying Hazardous Material;* AFMAN 24-204, *Preparing Hazardous Materials for Military Air Shipment*; T.O. 11N-45-51 series, *Transportation of Nuclear Weapons, Materiel, General Shipping, and Limited Life Components (LLC) Data; Defense Transportation Regulation* **(**DTR) 4500.9R *Part 2* and AFJI 24-210, *Packaging of Hazardous Material;* AFI 24-203, *Preparation and Movement of Air Force Cargo;* AFI 24-301, *Transportation Vehicle Operations,* MILSTD 129, *Military Marking for Shipment and Storage.*

8.4. Local Laws Regulating Transportation of Explosives and Dangerous Articles. Each state and nearly all local and foreign governments have laws or ordinances regulating transportation of explosives and other dangerous articles within their jurisdiction. Obey local laws where state, local or host nation governments have jurisdiction. Where there is exclusive federal jurisdiction, local laws may not apply. Where there is a conflict, contact your MAJCOM for clarification.

8.4. (ACC)Local Laws Regulating Transportation of Explosives and Dangerous Articles. Movement of munitions off-installation must initially be coordinated with the Base Traffic Management function. Place procedures in local written guidance when applicable.

Section 8C—Hazard Classification for Explosives Transportation

8.5. Hazard Classification Requirements for Transportation. Explosives, to be acceptable for transportation by any mode, must have an assigned hazard classification (HD; storage compatibility group; DOT class, markings, shipping name and label; and United Nations serial number), except as noted in paragraph 8.6. Developmental items, test articles, components, and certain commercial items that contain explosives, but without a final classification must be assigned an interim hazard classification. See Chapter 3 for hazard classification procedures.

8.6. Commercial Explosives Hazard Classification Requirements for Transportation. Commercial explosive items purchased for official use must have a hazard classification assigned in accordance with T.O. 11A-1-47 before transportation and use, except as provided in this paragraph. Store, transport, or offer for transportation, commercial explosives that have not been examined, hazard classified, and approved by DoD in accordance with Title 49 CFR 173.56(b)(2) provided one of the following paragraphs is complied with:

8.6.1. The explosive has been designated, in writing, by the Associate Administrator for Hazardous Materials Safety (AAHMS), Research and Special Programs Administration, DOT, as "Not Regulated."

8.6.2. The explosive has been approved for transportation, in writing, by the AAHMS in a Classification of Explosives, Competent Authority Approval, or in a Confirmation of Acceptability of a foreign Competent Authority Approval, and the hazard classification of the explosive is HD 1.4S.

8.7. Compatibility of Explosives During Transportation. Part 177, Subpart C, Title 49 CFR provides guidance for separating and segregating hazardous materials, including different explosives, in the various modes of commercial transportation. Explosives transported on a public highway by Air Force motor vehicles, operated by Air Force personnel, will be separated and segregated using the rules in Title 49 CFR, except as otherwise provided in this Manual or other applicable military directives. When an item containing explosives is assigned to other than hazard class 1 because of the predominant hazard, a compatibility group is still assigned (see **paragraph 3.5.1.2**). For these items, compatibility for transportation, and temporary storage incident to transportation, must be based on rules for the assigned hazard class, not on the compatibility group. The compatibility group for these items applies only to long term storage. Cargo-configured items that may be shipped in the same Air Force aircraft are listed in AFMAN 24-204 and T.O. 11N-45-51 series. Procedures for submitting a compatibility waiver for air transportation of explosives is contained in AFMAN 24-204. The following exceptions to the above standards are permitted:

8.7.1. Development of new items for transportation by combining previously hazard classified components into an increased state of assembly to meet a valid military need. Use normal hazard classification procedures (T.O. 11A-1-47) to obtain the hazard classification approval for transportation applicable to the new configuration.

8.7.2. Movement of assembled or partially assembled explosive items between servicing explosives locations and aircraft loading points or other such locations on the same military installation, when the assembly has not been classed and approved as provided in T.O. 11A-1-47, but is necessary to meet valid operational requirements. If the operational requirement is expected to continue or can be anticipated, seek hazard classification approval.

8.7.3. Movement in a military vehicle of minimum quantities of explosive items necessary for demolition operations, to include proficiency training. Blasting caps, demolition explosives and unserviceable (but not dangerously unserviceable) munitions may be transported by the same vehicle, provided MAJCOM approves the mixing of all applicable compatibility groups. See **paragraph 8.22** for restrictions concerning the carrying of explosives inside passenger compartments.

8.7.3. **(ACC)** Mixing of compatibility groups is authorized for EOD proficiency training and disposal operations as long as blasting caps and demo charges are separated to the maximum extent possible.

8.7.4. Transport dangerously unserviceable munitions in a separate military vehicle. If transport in a separate military vehicle is not possible, segregate and sandbag from other explosives being transported. Transport dangerously unserviceable munitions according to **paragraph 8.11** provided the munitions have been determined safe for transportation by qualified personnel as specified by the MAJCOM.

8.7.4. **(ACC)** Only qualified EOD personnel can make the determination as to whether dangerously unserviceable munitions are safe for transportation.

8.7.5. Movement by a DoD-owned vehicle, operated by DoD personnel, of mixed loads consisting of components (not otherwise compatible for transportation), in the numbers and of the types necessary to assemble a number of complete rounds of a single type, when essential to meet operational requirements, and when separate (unmixed) movement is not feasible. See DoD 4500.9R, *Defense Transportation Regulation,* for procedures where such exceptions to compatibility rules are required.

8.7.6. Movement by a DoD-owned vehicle, operated by DoD personnel, or a mixed load of small quantities of items (not to exceed 1,000 pounds total NEWQD) from compatibility groups B through J, N, and S. The NEWQD of HD 1.4S items need not be included.

8.7.7. Movement by Security Forces of mixed loads of ammunition in performance of their duties.

8.8. Compatibility of Explosives During Temporary Storage. Table 7.1, Title 49 CFR, or AFMAN 24-204 criteria may be used for temporary mixing of explosives while undergoing packing and unpacking operations or while in temporary storage awaiting shipment. Do not store other dangerous articles with these explosives. Shipping, receiving and storage facilities must comply with QD criteria of this Manual for the HD involved.

Section 8D—Packaging for Explosives Transportation

8.9. Packaging. Packaging of explosives offered for shipment must comply with T.O. 11A-1-10, Title 49 CFR, Part 173, or AFMAN 24-204 specifications, as appropriate. Follow these instructions:

8.9.1. Locally made packaging must meet the construction and marking requirements in Title 49 CFR, or must conform with a military Certification of Equivalency for the item being packed.

8.9.2. Mark each package to identify contents. The DOT marking consist of the Proper Shipping Name; United Nations Identification Number; and the EX-number, national stock

number or other product code as specified in the hazard classification. See AFMAN 24-204, T.O. 11N-45-51, or the Joint Hazard Classification System (JHCS), as appropriate. For Transportation Protective Service Material, mark in accordance with Defense Transportation Regulations and MIL-STD-129.

8.9.3. If an item is not listed in above references, contact 505 CBSS/GBBA, Hill AFB UT 84056-5609 for the required data.

8.9.4. Do not open or repair a package in a railcar, motor vehicle, or aircraft unless it is essential for inflight safety or to safely unload a damaged package. Avoid re-nailing boxes because of the potential to strike the explosives with the nail.

8.9.5. If a package is damaged or defective, remove it from the transporting vehicle at the earliest opportunity for repair.

8.10. Shipment of Explosives Which Have Been Damaged or Failed To Function. If it is necessary to ship an explosive item that has been damaged, subjected to abnormal force or has failed to function, ask the responsible AFMC (prime ALC) element for shipping, packing, marking and safety instructions. For damaged or failed-to-function AE, EOD must determine that it is safe to ship prior to munitions requesting shipping instructions from ALC.

8.11. Transporting Dangerously Unserviceable Explosive Items for Disposal. Package and mark dangerously unserviceable items and explosive residue such as partially burned signals as specified in the item T.O. or EOD technical publications. Consult EOD before transporting dangerously unserviceable items and explosive residue other than as approved by DOT. DoD personnel who are properly trained in procedures to be followed and specific hazards of the material may routinely transport dangerously unserviceable items and explosive residue. Inspect vehicles using DD Form 626, Motor Vehicle Inspection (Transporting Hazardous Material).

Section 8E—Explosives Movement Routes on Base

8.12. Explosives Movement Routes on Base. Designate the safest possible primary and alternate explosives movement routes to cover all phases of movement. Identify routes and any limitations on explosives quantities by hazard class/division on base maps. Avoid built-up areas and key, mission-oriented facilities and equipment to the maximum extent possible. Movements of munitions within a munitions storage area, airfield or to and from licensed storage locations and transportation of explosives in support of the training of working dogs are not restricted to designated routes.

8.12. (ACC)Explosives Movement Routes on Base. Post on-base explosives movement routes at the emergency control center or fire alarm control center, munitions and maintenance operations control, readiness, Base Defense Operations Center (BDOC), EOD, and weapons safety. Maintain radio communication with respective control/dispatch during munitions movements.

Section 8F—Incoming and In-transit Explosives Shipments

8.13. Incoming Explosives Shipments. Review guidance in the Transportation Facilities Guide maintained by Surface Deployment and Distribution Command (SDDC). Contact the base transportation officer for this guide. The base transportation officer is responsible for

maintaining the base information current in the SDDC database. Clearly state in notification procedures the NEWQD (and MCE if applicable), by HD, that can be received at unloading facilities (i.e., railheads, ports, hot cargo pads, etc).

8.14. In-transit Explosives Shipments/Secure Holding. When the SDDC or carrier requests temporary storage for in-transit shipments of explosives, the responsible commander may authorize explosives laden carriers to temporarily store their cargo at a Secure Explosives Holding Area, or Secure Non-explosives Holding Area for HD 1.4S materials (see **paragraph 12.64**). Furthermore, DoD installations and activities shall provide a secure holding or safe haven for A&E shipments during emergency conditions (vehicle breakdowns, criminal/terrorist threat, etc.). Coordinate with the base transportation officer to ensure the Transportation Facilities Guide correctly reflects the NEWQD (and MCE if applicable), by HD, that can be held at the Secure Explosives Holding Area. See Defense Transportation Regulation (DTR), Part II, Chapter 205.Q, AFI 31-101, *Integrated Defense, integrated defense plans* and AFI 10-2501, *Air Force Emergency Management (EM) Program Planning and Operations,* for information. For guidance on SAFE HAVEN and SAFE parking, refer to AFMAN 32-4004, *Emergency Response Operations,* for information.

8.15. Inspection of Incoming Explosives Shipments. All incoming motor vehicles carrying hazard class 1 explosives and other hazard class items that carry an explosives compatibility group, to include HD 1.4 shipments more than 1,001 lbs (in accordance with 49 CFR 172.504), will be inspected at a designated inspection station by a representative of the Logistics Readiness Squadron (LRS) commander before further routing on base.

8.15.1. Inspection stations do not require explosives siting if they are limited to the activities described in paragraph 12.58. If the inspection station is also used as an explosives storage or suspect vehicle holding area, it must meet QD criteria per Chapter 12. Do not perform vehicle inspections at the station if it is in use as an explosives storage area or suspect vehicle holding area. The inspection station may be used as an interchange yard. Vehicles shall be removed promptly.

8.15.2. Inspections will be done using DD Form 626.

8.15.3. Once a vehicle has passed the initial inspection, a visual inspection of the external condition of the cargo may be done at any suitable location, including the unloading point.

8.15.4. Any vehicle found or suspected to be in a hazardous condition will be moved to a suspect vehicle holding area which is isolated from other locations by the proper QD criteria per paragraph 12.63, unless it is more hazardous to move the vehicle.

8.16. Inspection of Outgoing Explosives Shipments. This paragraph does not apply to the departure of in-transit explosives shipments. All vehicles to be used for off-base shipments of explosives will be inspected by shipping activities before and after loading for compliance with safety regulations.

8.16.1. Complete DD Form 626 according to DTR 4500.9R, Part 2, Chapter 204.

8.16.2. Maintain a record of the vehicle number, the type of explosive cargo, and the number of each seal applied to the vehicle.

8.16.3. Drivers must be qualified to operate the vehicle and knowledgeable of the explosives being transported and associated hazards. In addition, Air Force civilian drivers must have a

Commercial Drivers License, with a hazardous materials endorsement, to transport explosives off a military installation. See AFI 24-301, *Vehicle Operations*.

8.16.4. DD Form 836, Dangerous Goods Shipping Paper/Declaration And Emergency Response Information for Hazardous Materials Transported By Government Vehicles, will be used to instruct drivers on the nature of their cargo, firefighting methods, and other specific precautions for the particular shipment. Information on the preparation and use of DD Form 836 is in DTR 4500.9R, Part 2.

8.16.5. Overseas units shall use bilingual instructions on the DD Forms 626 and 836 where needed.

8.16.6. Where special purpose vehicles are authorized to transport explosive loads, applicable technical data will be used.

8.16.7. Written procedures will be developed with the base Logistics Readiness Squadron to ensure procedures and requirements for military vehicles or drivers transporting explosives (assembled or partially assembled in a delivery mode) across or on public highways from one part of a base to another are compliant with the Defense Transportation Regulation 4500.9R, Volume II, Chapters 204 and 205. Examples may include the transportation of munitions from a preparation area across the highway to the main base flightline, or on the highway to a nearby auxiliary field. If this is a daily operation, there shall be an agreement with local authorities on any local restrictions to be imposed. OCONUS locations must comply with Host Nation requirements, including any notice requirements contained in host nation law or applicable international agreements.

8.16.8. Commercial carriers used to move explosives over public highways from one area to another area of an installation will be externally inspected before entering the second area. Inspection is not required if the carrier was escorted or under surveillance en route.

8.17. Interchange Yards. This location will be used for the exchange of tractor-trailers between the common carrier and the base activity involved. Interchange yards do not require explosives siting if they are limited to the activities described in paragraph 12.59. If the inspection station is also used as an explosives storage or suspect vehicle holding area, it must meet QD criteria per Chapter 12. Do not perform vehicle interchange operations at the yard if it is in use as an explosives storage area or suspect vehicle holding area. The interchange yard may be used as an inspection station. Vehicles should be removed promptly.

8.18. Holding Yards. If the explosives-loaded vehicles cannot be dispatched to unloading points promptly, they must be moved to a holding yard. See **paragraph 12.60** for holding yard siting requirements. Holding yards may be used for interchange and inspection activities.

8.19. Classification Yards. Where the volume of vehicle traffic necessitates, establish a classification yard primarily for receiving, classifying, switching, and dispatching explosives-laden vehicles. Classification yards do not require explosives siting if they are limited to the activities described in paragraph 12.61. If the classification yard is also used as an explosives storage or suspect vehicle holding area, it must meet QD criteria per Chapter 12. The classification yard may be used as an interchange yard. Vehicles should be removed promptly.

8.20. AE Transportation Mode Change Locations. Transportation mode change locations require explosives siting as per paragraph 12.62.

Section 8G—Transportation and Movement of Explosives by Motor Vehicle and Material Handling Equipment

8.21. General. This section covers the transport and handling of explosives by DoD motor vehicle and material handling equipment. The requirements of this section also apply to DoD rental vehicles when used to transport DoD explosives on military installations. Do not transport DoD explosives in POVs under any circumstance.

8.21. (ACC)General. ACC Inspector General (IG) personnel using the trunk of passenger vehicles to transport explosives in the performance of military duties will not transport more ground burst simulators or smoke generators than required for a single ability to survive and operate exercise event.

8.21.1. Chock explosive loaded vehicles and material handling equipment (MHE) when parked and the driver is not behind the wheel. Chocking MHE is not required if the explosives load is lowered and completely resting on the ground.

8.21.2. Other forms of explosives loaded MHE (trailers, universal ammunition loading systems (UALS), etc.) will be chocked when parked and/or left unattended.

8.22. Transporting Explosives in Passenger Compartments. Do not transport explosives in a passenger compartment of a vehicle, except as authorized below.

8.22.1. Minimum essential personnel and limited quantities of HD 1.4, 1.3, and 1.2.2 explosives, as approved by the local OI, may be transported together in cargo portion of vehicles (including Metro type vans used on flightlines) or in vehicles used as runway supervisory units.

8.22.2. Egress system assembled components may be transported in the cargo compartment of Metro-type vehicles.

8.22.2. **(ACC)** Licensed egress components (any HC/D) may be transported in Metro-type vehicles.

8.22.3. For emergency responses in vehicles without separate cargo compartments (e.g., robot vans, Metro-type vehicles, HMMWV, EOD Base Support Emergency Response Van (BSERV), Mine Resistant Ambush Protected (MRAP) family of vehicles), EOD units are authorized to transport minimum essential quantities of all HDs inside the vehicle. Separate incompatible explosives to the maximum extent possible.

8.22.4. Basic load munitions issued to emergency response personnel in the performance of their duties are exempt from these requirements. Basic loads can include HD 1.1 40mm grenades, LAW rockets, etc. However, transportation of re-supply stocks must comply with all the requirements of this paragraph.

8.22.5. When units responsible for demolition operations are issued vehicles without separate cargo compartments, such vehicles may be used to transport minimum quantities of explosives necessary to support demolition. Trailers will be used to the maximum extent possible.

8.23. Transporting Electro-Explosive Devices. When transporting items containing EEDs, fully consider EMR hazards discussed in Chapter 9. Vehicles with plastic bed liners may be used to transport EEDs that are in their original sealed outer package, box, or container. Metal

ammo-type containers may be used to transport EEDs in vehicles with plastic bed liners if the containers provide the protection required by paragraph 7.9.2 and are bonded to the metal body of the vehicle.

8.24. Transporting Aircraft Seats and Survival Kits. Aircraft seats and survival kits with explosive devices installed must contain required safety pins and devices and be secured to prevent movement during transit.

8.25. Packaging. Transport explosives in their approved storage and shipping packaging. If less than a single shipping package must be transported, pack the explosives separately from other items in enclosed, clearly marked metal or wooden containers.

8.26. Placarding.

8.26.1. Use DOT placards as outlined in Subpart F of Title 49 CFR, Part 172. When transporting munitions off the installation in a foreign country comply with host nation requirements.

8.26.2. Commanders may omit placards on base where necessary to avoid attention of hostile forces. Instruct all personnel in proper emergency actions.

8.26.3. Where tow vehicle and trailer combinations are used on base, placard the lead vehicle on the front and the last vehicle on the rear. Placard loaded vehicles in between on each side. Placards may be omitted for transporting HD 1.4 material on base.

8.26.4. Placard materials handling equipment only when used in the same manner as a transport vehicle or trailer.

8.26.5. Compatibility group letters may be omitted from the placard if the vehicle remains on the installation.

8.26.6. Placards are not required when transporting nuclear weapons or on any explosives loaded vehicle in a nuclear weapons storage area.

8.26.7. Vehicles transporting Military Working Dog Explosives Search Training kits must be properly placarded.

8.27. Motor Vehicle Inspection. Prior to use, inspect motor vehicles used to transport explosives to determine that:

8.27.1. Fire extinguishers are available, filled, and in good working order (see **paragraph 10.23**).

8.27.2. Electric wiring is in good condition and properly attached.

8.27.3. Chassis, motor, pan, and underside of body is reasonably free of oil, grease, and fuel.

8.27.4. Fuel tank and feed lines are secure and not leaking.

8.27.5. Brakes, steering, lights, horn and windshield wipers are functioning properly.

8.27.6. Tires are properly inflated and serviceable IAW T.O. 36-1-191.

8.28. Load Protection and Stability.

8.28.1. Cover exposed ferrous metal in the cargo compartment before transporting explosives that are not packaged in DOT specified containers or equivalent.

8.28.2. Use only static resistant and noncombustible or flameproof tops or coverings.

8.28.3. Fasten safety chains between towing vehicles and trailers carrying explosives when lunette and pintle fastenings are used. Safety chains are not required when using specifically designed breakaway control safety features prescribed by the pertinent T.O.

8.28.4. Ensure lifting devices on vehicles or handling equipment have a serviceable mechanism designed to prevent sudden dropping of the load in the event of power failure.

8.28.5. Loads on the tines of a forklift must not extend more than one-third of the height of the top tier of containers above the backrest.

8.28.6. Ensure forklifts use skids or pallets to move containers of explosives, except when containers are designed with fully enclosed stirrups (360 degrees) for forklift tines.

8.28.7. Munitions may be carried on forklift tines when the weapon body is long enough to be firmly supported on both tines and strong enough to prevent damage.

8.28.8. Ensure munitions loads (AE and inert AE components) on all types of vehicles and handling equipment are stable and secure before movement. Load stability is required for all movements, to include rewarehousing or other activities conducted between one or more storage magazines, storage pads or other operating location. For on base movements, munitions loads (AE and inert AE components) must be restrained, blocked, braced, tied down or otherwise secured to the vehicle to prevent movement and must not damage explosives or containers. "Secure" means the load is protected by an effective restraining system. Restraining devices may include chains and binders, cargo nets and tie-down straps, sideboards and tailgates, etc.

8.28.9. Consider vehicle and handling equipment type, type of load, and the prevailing weather and road conditions when determining if safe transport is feasible. This guidance pertains to munitions storage area as well as applicable flightline operations.

8.29. Loading and Unloading.

8.29.1. Chock explosives loaded vehicles and MHE (trailers, UALS, etc.) during loading or unloading operations.

8.29.2. To the maximum extent possible, position munitions cargo vehicles to permit loading and unloading from each side of the cargo bed. Munitions will be accessed from the side closest to the load unless access can only be obtained from one side.

8.29.3. Except as required in the event of an electrical storm (see Section 7H), do not leave explosives-laden vehicles unattended unless they are parked in a properly designated area, such as the weapons storage area, holding yard or flightline munitions holding area.

8.29.4. Do not load or unload explosives from a motor vehicle while the engine is running, except under the following conditions:

8.29.4.1. Where the engine is required to provide power to vehicle mechanical handling equipment used in loading and unloading the vehicle.

8.29.4.2. Where necessary for emergency operations or timing for exercises simulating execution of emergency plans. In this case, small loads or packages of explosives

delivered to aircraft, requiring only momentary unloading time, may be removed from a vehicle while the motor is running.

8.29.4.3. Engines of diesel-powered vehicles may continue to run during loading or unloading of explosives except when exposed explosives or hazardous locations are involved.

8.29.4.4. Adequate ventilation is provided to prevent unnecessary build-up of exhaust gases.

8.29.5. Do not leave vehicles at aircraft or storage locations longer than needed to complete explosives loading or unloading. If a delay occurs, move the vehicle from location.

8.29.6. Refuel trucks before loading explosives.

8.30. Vehicle Refueling.

8.30.1. Refuel non-explosives loaded vehicles and equipment at least 100 feet from structures or sites containing explosives.

8.30.2. When refueling explosives-loaded vehicles, maintain a bonded path between the tank being filled and the tank being emptied. Ground the entire system. Refer to Section 7D for further guidance on static grounding.

8.30.2. **(ACC)** Vehicles will be fueled before transporting explosives. For example, personnel will not load explosives and then proceed to the base service station.

8.30.2.1. When refueling is completed, remove refueling vehicle from the storage area.

8.30.2.2. Use the smallest available size of refueling unit.

8.30.2.3. One person must be present during the entire operation.

8.30.2.4. During refueling, stop motors of vehicle being refueled and refueling truck (unless refueling truck motor drives the pump).

8.30.2.5. In event of a fuel spill, immediately notify the base fire department. Do not start motors of refueling truck or unit being refueled until area is rendered safe.

8.31. Battery-Powered Materials Handling Equipment. Battery-powered equipment is preferred for handling explosives and should be used when possible.

8.31.1. Electrical cables will be mounted to prevent catching on stationary objects or damage by cutting or abrasion. Cables will be protected to prevent short-circuiting as far as is practicable.

8.31.2. Batteries will be securely fastened. Battery boxes will give ample ventilation, with ventilation openings that prevent access to the cell terminals from the outside.

8.31.3. Equip with a dead-man switch and a main service switch that can be operated from the driving position.

8.32. Gasoline or Diesel-Powered Materials Handling Equipment.

8.32.1. Equip with a standard muffler and air cleaner.

8.32.2. Ensure gas caps are in place.

8.32.3. If necessary, install a deflector plate to prevent overflow from the fuel tank from reaching motor or exhaust pipe.

8.32.4. On gravity feed fuel systems or on pump systems that can be siphoned, install an emergency shutoff valve at fuel tank or in the feed line.

8.32.5. Protect fuel lines from rupture due to vibration.

8.32.6. Securely fasten electrical connections to prevent accidental disconnection that might result in sparks or fire.

8.32.7. Do not use equipment in areas classified as hazardous locations

8.33. Liquefied Petroleum and Compressed Natural Gas Fueled Vehicles. Motor vehicles or other equipment used to transport explosives which use Liquefied Petroleum (LP) or Compressed Natural Gas (CNG) for propulsion must have a fuel system which complies with the current edition of the National Fire Protection Agency, Standard 58, Section 8.2.6, Engine Fuel Systems.

8.34. Exposed Explosives Precautions. Do not use battery, gasoline or diesel-powered vehicles and materials handling equipment inside any structure or building containing exposed explosives. Vehicles or equipment may be used within the vicinity of structures containing exposed explosives providing:

8.34.1. Gasoline or diesel-powered units have exhaust system spark arrestors and, where applicable, carburetor flame arrestors (standard air cleaners).

8.34.2. Spark arrestors meet military specifications for the particular equipment and are installed so they will not become clogged in normal operation (AFOSH Standard 91-66, *Occupational Safety General Industrial Operations*, and T.O. 38-1-23, *Inspection and Installation of Exhaust Spark Arrestors and Exhaust Purifiers (Catalytic Mufflers) on Non-Aircraft Engines*).

8.34.3. Vehicle operators inspect spark arrestors before each daily use and clean them if there is an excess of carbon particles.

8.35. Storage of Powered Materials Handling Equipment. Battery, gasoline, LP, CNG, or diesel-powered equipment may be stored in a magazine, storehouse or other suitable location that contains only non-explosives materials. Keep equipment at least 10 feet from combustible material. Keep aisles clear at all times and space to minimize spread of fire from one unit to another. Equipment essential to day-to-day operations may be parked in fire-resistive buildings containing explosives. The following minimum requirements must be met:

8.35.1. Use properly rated fire walls and closed doors to completely separate equipment from bays, rooms or cubicles containing explosives.

8.35.2. Ensure designed fire-resistant ratings for the enclosures containing explosives are not degraded.

8.35.3. Battery charging must comply with AFOSH Standard 91-66.

8.35.4. Weapons safety and fire protection personnel must review the local situation for any additional measures necessary to enhance safety.

8.36. Operating Powered Materials Handling Equipment Inside Structures. Concentration of carbon monoxide in the operating area must not exceed the current occupational exposure limit. Consult the local bioenvironmental engineer for a determination of exposure levels, applicable exposure standards, and recommended controls.

8.37. Maintenance of Vehicles Carrying Explosives.

8.37.1. Only operator inspection and maintenance normally related to the operation of a vehicle will be done on explosives-laden vehicles. Such maintenance includes servicing with fuel, oil, air, lubrication and water, changing tires, fuses, hoses and drive belts, etc.

8.37.2. No maintenance will be done on an explosives-loaded vehicle or trailer that would increase the probability of fire or would require the use of heat-producing equipment.

8.37.3. No restrictions are imposed on tractor maintenance when the tractor is separated by at least 100 feet from an explosives-loaded trailer.

8.37.4. When tires are being changed, the vehicle or trailer must not be elevated so as to shift the load or place an excessive strain on the tiedowns.

8.37.5. Vehicles carrying nuclear weapons are subject to the maintenance restrictions in T.O. 11N-45-51 series.

Section 8H—Transportation of Explosives by Rail

8.38. General.

8.38.1. 49 CFR, Part 174 and DOT safety regulations for safety devices, safeguards, design of equipment, etc., are mandatory for railway equipment transporting materials outside an installation. These regulations should also be followed within an installation.

8.38.2. Special attention should be given to rail clearances to buildings, loading docks, overhead lines, etc.

8.38.3. **Locomotives.** Portable fire extinguishers will be carried on all locomotives and other self-propelled rail vehicles as directed in paragraph 10.23.2.

8.38.4. **Track Layout.** Railroad lines serving explosives areas should be looped to give at least two ways of exit.

8.38.5. Control vegetation along the railroad right-of-way on the base as directed in paragraph 10.16.

8.39. Movement of Railcars Containing Explosives.

8.39.1. **By Engine.** Secure load and cut in air brakes before movement. Cars should not be uncoupled while in motion or pulled apart by locomotive power.

8.39.2. **By Car Mover.** Station an individual at the hand brake during any manual movement of a car.

8.40. Spotting Railcars.

8.40.1. Set hand brakes and properly chock wheels when spotting single cars. When more than one car is spotted and the engine detached, set hand brakes on the downgrade end of the cut of cars. Do not rely on the automatic air brakes to hold spotted cars.

8.40.1.1. Locomotives will not stop in front of buildings and loading docks containing hazardous materials longer than needed to spot cars for loading or unloading.

8.40.2. Cars at a magazine or building should be located so that personnel may evacuate the building or car rapidly if necessary.

8.41. Switching Railcars.

8.41.1. Special care will be taken to avoid rough handling of cars.

8.41.2. Cars must not be cut off while in motion. Cars will be coupled carefully to avoid unnecessary shocks. Other cars will not be cut off and allowed to strike a car containing explosives.

8.41.3. Place cars in yards or on sidings so they can be quickly removed from the danger of fire and handled as little as possible. They will not be placed under bridges or alongside passenger sheds or stations. Engines on a parallel track should not be allowed to stand opposite or near them.

8.41.4. Dropping, humping, kicking, or use of the flying switch is prohibited.

8.42. Marking Railcars with Blue Flags or Signals. Place blue flags or signals at both ends of a car when personnel are working in, on, or under the cars, except as noted below. Do not move or couple cars marked in this manner. The supervisor or foreman in charge of the personnel loading or unloading the cars is responsible for placing and removing the blue flag or signal. Inform train crews in the use of blue flags or signals.

8.42.1. Flags are not required when flat cars are involved and the presence of a working party is clearly evident.

8.42.2. Flags or signals may be omitted from the end of a car located against or toward a dead end spur. This also applies to a loading ramp where no other rolling stock can approach from that direction.

8.43. Loading Railcars.

8.43.1. Inspect car thoroughly, inside and out, to determine its suitability to carry the type of explosives involved.

8.43.2. Broom clean the interior of the car before loading explosives.

8.43.3. Remove or cover protruding nails and bolt heads to prevent damage to packages.

8.43.4. Provide substantial gangways.

8.43.5. Remove any obstructions that may prevent free entry to the car.

8.43.6. Clear immediate area of leaves, dry grass, and other flammable materials.

8.43.7. Close the car and magazine doors during loading operations when engines or speeders are passing.

8.43.8. Do not leave cars partly loaded unless it is impossible to finish loading at one time. In this case, lock car doors.

8.43.9. If it becomes necessary to move a partially loaded car, brace the load.

8.43.10. During and after loading, properly brace and stay the shipment per paragraph 8.44.

8.43.11. After loading, seal the car per paragraph 8.49.

8.44. Loading and Bracing. When loading freight cars, consult Bureau of Explosives Pamphlets 6 and 6A and 49 CFR, Part 174 for guidance unless specific instructions or car loading drawings are available for the items involved. These pamphlets govern the method of loading, staying, and bracing of carload and less-than-carload shipments of explosives. Refer to Bureau of Explosives Pamphlet 6C for guidance in securing truck bodies or trailers on flat cars. Also see this pamphlet for loading, blocking, and bracing of the cargo within, or on, such vehicles or containers. The carrier or cargo must not shift under an impact of 8 miles per hour from either end. Obtain Bureau of Explosives pamphlets by writing: Bureau of Explosives, 50F St. NW, Washington DC 20336.

8.45. Placarding of Railcars.

8.45.1. Placard railcars transporting explosives according to paragraph 8.26.1.

8.45.2. Display placards when the first container of explosives is loaded in the railcar. Remove placards when the last container of explosives is removed from the railcar.

8.45.3. Four placards are required for each railcar. It is the responsibility of the shipper to furnish the needed placards.

8.45.4. Where necessary, to avoid attention of hostile forces, commanders may omit placards when arrangements are made with the host nation or governmental agency involved. Instruct all involved (including essential train crews) in proper emergency actions.

8.46. Railcar Requirements.

8.46.1. Cars used for the shipment of material requiring placarding under Title 49 CFR, Part 172, must meet standards for the class of material being shipped as specified in Title 49 CFR, Part 172.

8.46.2. Inspect cars for HD 1.1 explosives before and after loading.

8.46.3. Accomplish, distribute, and affix car certificates according to Title 49 CFR, Part 174.104.f.

8.47. Leaking Packages in Railcars.

8.47.1. Continually be alert to detect leaking packages or leaking tank cars.

8.47.2. Remove and repair leaking packages from cars. In the case of tank cars, transfer the contents.

8.47.3. Switch leaking tank cars containing compressed gases to a location distant from habitation and highways. The on-scene commander should determine the appropriate distance. Take action to transfer contents.

8.47.4. Protect cars containing leaking packages or leaking tank cars to prevent ignition of liquid or vapors.

8.47.5. Hold to a minimum the movement of a leaking car until the unsafe condition is corrected.

8.47.6. If artificial light is necessary, use only approved explosion proof electric lights.

8.48. Tools for Loading and Unloading Railcars. Steel tools, used with reasonable care, may be used inside cars if explosives are not exposed. When explosives are exposed, special care will be taken to prevent sparks.

8.49. Sealing Railcars.

8.49.1. Seal cars containing explosives with railway-type car seals stamped with an identifying number. The shipper will keep a record of car numbers and seals (see DoD 4500.9R, *Defense Transportation Regulation*, for additional car seal regulations).

8.49.2. When a car seal is changed on a car of explosives, record the following information:

8.49.2.1. Railroad.

8.49.2.2. Place.

8.49.2.3. Date.

8.49.2.4. Number or description of seal broken.

8.49.2.5. Number or description of seal used to reseal car.

8.49.2.6. Reason for opening car.

8.49.2.7. Condition of load.

8.49.2.8. Name and occupation of persons opening car. Document this record on waybills or other forms or memorandum that accompanies car to destination.

8.50. Processing Incoming Loaded Railcars.

8.50.1. A competent representative will inspect railcars containing explosives at a designated inspection station. Inspection stations do not require explosives siting if they are limited to the activities described in paragraph 12.58. If the inspection station is also used as an explosives storage or suspect vehicle holding area, it must meet QD criteria per Chapter 12. The inspection station may be used as an interchange yard. Railcars should be removed promptly.

8.50.2. Inspect the outside and underside of each car to detect damage (such as defective brakes, couplings, wheel flanges, or hot boxes) or unauthorized and suspicious articles.

8.50.3. If pits are not available, conduct inspections from ground level. Provide pits if sabotage is possible.

8.50.4. If rail traffic is heavy enough or in an emergency, a pit will help in inspecting and moving cars rapidly.

8.50.5. Isolate cars of explosives for prompt corrective actions when foreign and suspicious articles have been attached outside or underneath the car. Also isolate when there is a defect that could affect installation safety or car contents.

8.50.5.1. Move car, unless the problem prohibits, over the safest route to a location separated from other areas by proper inhabited building distances.

8.50.5.2. Correct the unsatisfactory conditions before the car and cargo are released from the designated suspect car site, unless a determination is made that they are safe to move.

8.50.6. Check individual car numbers and seal numbers against bills of lading. If the seal numbers on a car do not correspond to the numbers shown on the bill of lading, or a seal is not in place, treat as a suspect car. Remove it to the suspect car siting for additional inspection.

8.50.7. Visual inspection of the external condition of the cargo in cars that pass the initial inspection may be done at any suitable place, including the unloading point. Such cars may be considered reasonably safe. However, exercise care in breaking seals and opening doors because of the potential for shifted loads or leaking containers.

8.50.8. If warranted by the inspection results, promptly remove cars from the inspection station.

8.50.9. Externally inspect commercial carriers used to move explosives through a public access route, from one area to another area of the installation, before entering the second area. This is not needed if it is escorted or under surveillance enroute.

8.51. Rail Interchange Yards. This location will be used for the exchange of railcars between the common carrier and the base activity involved. Interchange yards do not require explosives siting if they are limited to the activities described in paragraph 12.59. If the inspection station is also used as an explosives storage or suspect vehicle holding area, it must meet QD criteria per Chapter 12. The interchange yard may be used as an inspection station. Railcars should be removed promptly.

8.52. Rail Holding Yards. If explosives-loaded railcars cannot be dispatched to unloading points promptly, they must be moved to a holding yard. See **paragraph 12.60** for holding yard siting requirements. Holding yards may be used for interchange and inspection activities.

8.53. Rail Classification Yards. Where the volume of rail traffic necessitates, establish a classification yard primarily for receiving, classifying, switching, and dispatching explosives-laden railcars. Classification yards do not require explosives siting if they are limited to the activities described in paragraph 12.61. If the classification yard is also used as an explosives storage or suspect vehicle holding area, it must meet QD criteria per Chapter 12. The classification yard may be used as an interchange yard. Railcars should be removed promptly.

8.54. Trailers on Flat Cars or Piggyback Explosives Loading and Unloading. The following instructions govern use of explosives Trailers on Flat Cars (TOFC) railheads:

8.54.1. Control loading or unloading operations to reduce exposures to a minimum.

8.54.2. Quickly remove trailers from the railroad car and send at once to their destination or schedule for prompt loading on arrival at the site. If there is an unforeseen delay in loading or unloading, an explosives-loaded trailer may be kept at the site for a period not exceeding one working day.

8.54.3. Don't open piggyback shipping trailers and containers at the site except for emergency or suspected emergency situations, except as for Shipping and Storage Containers, Ballistic Missile (SSCBM). SSCBM received by TOFC may be opened at the site for inspection and road transport preparation as required by pertinent T.O.s.

8.54.4. Ensure adequate tie-down of trailers to railcars and blocking and bracing of explosives in the trailer. Cargo stability in transit is essential.

8.54.5. Apply safety rules in this chapter on explosives-laden motor vehicles and their operation.

8.54.6. The provisions of Bureau of Explosives Pamphlet 6C apply to explosives piggyback operations (the pamphlet lists railcars and hitches approved for TOFC service).

8.54.7. Except for those just discussed, do not conduct operations on explosive items or explosives-laden containers, trailers, cars, etc., unless applicable QD criteria are met.

Section 8I—Transportation of Explosives by Air and Water

8.55. Transportation of Explosives by Air. Air transportation of explosives by commercial aircraft is regulated by the DOT regulations that are incorporated into Title 49 CFR. Instructions about explosives-laden military aircraft (and certain DoD contract airlift operations) are in AFJI 11-204, *Operational Procedures for Aircraft Carrying Hazardous Material*, AFMAN 24-204, *Preparing Hazardous Materials for Military Air Shipments*, applicable aircraft T.O.s, and other parts of this Manual. Transportation of impulse cartridges (HD 1.4 only) in aircraft travel pods or bomber aircraft equipment bays is permitted if these cartridges are packed correctly in the original DOT shipping containers. This procedure will be governed by locally approved operating instructions IAW paragraph 7.2. More hazardous explosives (such as aircraft flares) are not authorized by this Manual for this type of carriage. See guidance in paragraph 8.2 for using NEWQD during transportation.

8.56. Transportation of Explosives by Water. Transportation of explosives and other hazardous materials by water in vessels engaged in commercial service is regulated by the United States Coast Guard. Shipments overseas must be made according to the regulations of the carrier, the United States Coast Guard or the Department of the Army.

Chapter 9

PROTECTION OF ELECTRO-EXPLOSIVE DEVICES FROM HAZARDS OF ELECTROMAGNETIC RADIATION TO ORDNANCE (HERO)

Section 9A—Hazards of Electromagnetic Radiation to Electro-Explosive Devices

9.1. Chapter Overview. This chapter is consistent with Air Force policy under DoDD 3222.3_AFPD 33-5, *DoD Electromagnetic Environmental Effects (E3) Program*, paragraph 4.1.3, which states "Hazards of Electromagnetic Radiation to Ordnance HERO…shall be mitigated prior to the conduct of all military exercises, operations, and activities." It also addresses the requirement in DoD 6055.09-M, Volume 2, *HAZARDS OF ELECTROMAGNETIC RADIATION TO ORDNANCE (HERO)*, that "Military Munitions…shall be…protected such that electromagnetic radiation (EMR) does not cause their inadvertent initiation, degradation or disablement." In addition to electro-explosive devices (EEDs) installed in ordnance and ordnance components, the protective methods described in this chapter will be applicable to individual EEDs, as well as all EEDs installed in aircraft. Throughout this chapter the term EED can be used interchangeably with munitions or ordnance.

9.2. Conducted Electromagnetic Energy. Conducted electromagnetic energy is imposed on circuits from other subsystems or sources by various methods. Examples are inductive or capacitive coupling from other cabling, sneak ground circuits, defective components or wiring, or errors in design. Protection of EEDs from conducted electromagnetic energy should be designed into a weapons system as part of the system safety design process.

Section 9B—Definitions and Conversion Formulas

9.3. Antenna Gain (G_t). Antenna gain is a measure of the power channeled by a directional antenna. It is usually provided in decibels (dB). Sometimes it is provided as a unitless number, G_t. Use the following formula to convert between G_{dB} and G_t:

$$G_t = \log^{-1}\left(\frac{G_{dB}}{10}\right) = 10^{[G_{dB}/10]}$$

9.4. EED Susceptibility Terms. Two types of EMR susceptibility can be defined for each EED.

9.4.1. **Maximum No Fire Current (MNFC).** The MNFC is a value statistically determined by experimental testing that quantifies the largest current amplitude that can be induced in the EED leads without initiating a reaction. The units for MNFC are usually milliamperes (mA).

9.4.2. **Maximum No Fire Power (MNFP).** The MNFP is a value statistically determined by experimental testing that quantifies the largest power that can be absorbed by the EED without initiating a reaction. The units for MNFP are usually milliwatts (mW).

9.4.3. **Bridgewire Resistance.** The two susceptibility values (above) are related by a third value with units of Ohms (□). This value is considered equivalent to the EED's bridgewire resistance value. The MNFP is equal to the resistance multiplied by the MNFC squared. If

only a single susceptibility is known, a bridgewire resistance of 1 can be assumed and used to calculate the other value.

9.5. Effective Isotropic Radiated Power (EIRP). The EIRP is equal to the actual transmitted power level (P_t) multiplied by the antenna's gain (G_t). The EIRP is defined as the amount of power an emitter would have to transmit equally in all directions (isotropically; if $G_t = 1$) to equal the power levels at the maximum point of the antenna pattern.

9.6. Electromagnetic Environment (EME). The EME is defined by the frequencies and power levels the EED will be exposed to at a given location due to all known sources of EMR.

9.7. Far Field/Far Field Distance (R_{ff}). The Far Field of an antenna is any location farther from the antenna than the Far Field Distance. The Far Field Distance is the point where the equations for the radiated electromagnetic field can be replaced with simpler equations and the difference has dropped below a threshold margin of error accepted by engineers. The simpler Far Field EMR equations describe a more consistent power density environment and the propagation and coupling of the EMR to a receiving antenna is easier to apply to the EED scenario.

9.7.1. Use the greater resultant from the following formulas to determine where the far field begins:

$$R_{ff} = L^2(f/c)$$

$$R_{ff} = 3(c/f)$$

R_{ff} = distance, in meters (or feet), from transmitting antenna where the far field begins
L = largest dimension of the antenna, meters (or feet)
f = frequency (Hz)
c = speed of light, $3x10^8$ m/s (or $984x10^6$ ft/s)

9.7.2. When the size or dimensions of the emitter aperture are not known, the following equation should be used to determine the worst-case aperture size:

$$L = (c/f)\sqrt{\frac{G_t}{2.8\pi}}$$

9.8. Frequency (f). Frequency is measured in hertz (Hz) or cycles per second. Use the following formulas to convert between kHz (1000 Hz), MHz (1,000,000 Hz), and GHz (1,000,000,000 Hz):

1 kHz = 0.001 MHz

1 GHz = 1000 MHz

9.9. HERO Certification. DoD 6055.09-M, defines HERO certification as "exposure, without adverse effects, of the munitions to the electromagnetic environment (EME) relevant to all life cycle configurations, including packaging, handling, storage, transportation, checkout, loading and unloading, and launch." This definition is dependent on the EME and the configurations of the munitions during operations.

9.10. HERO Classifications. Three possible HERO Classifications are available. The choice of classification is based upon the EED's susceptibilities to EMR, the configuration of the EED, and the EME the EED will experience during the planned operational event. The EME for EIDs is given in MIL-STD-464C, paragraph 5.9.3. and tables 9 and 10. HERO Classification is a temporary label used only to determine the proper procedures to follow to achieve the level of protection the EED requires to safely complete the planned operations.

9.10.1. **HERO SAFE.** If the EED is incapable of being initiated by EMR in its expected EME, either by design or by shielding, the EED shall be classified as HERO SAFE and no further protection is necessary.

9.10.2. **HERO SUSCEPTIBLE.** If the EED could potentially be initiated by EMR in its expected EME, the EED shall be classified as HERO SUSCEPTIBLE and protective efforts are required.

9.10.3. **HERO UNSAFE.** If susceptibility data for the EED is known to be less than the values used to establish the "worst-case" protective requirements (54mW MNFP and/or less than 85mA MNFC), the EED shall be classified as HERO UNSAFE and additional protective efforts are required. Examples of HERO UNSAFE EEDs include items not classified as SAFE or SUSCEPTIBLE, those with internal wiring exposed, items with exposed wire leads when handled in untested conditions, items being assembled or disassembled, and items with damage causing exposure of internal wiring.

9.11. Modern Mobile Emitters (MME). The term MME is used to describe all RF emitters that have the capability of moving with regard to the location of the EED, as well as any other low power emitters that are part of modern communication and data systems that include mobile emitters. This potentially invalidates the "far-field" approximations used to simplify the radiation theory and coupling models used when EMR safety requirements were analyzed with regard to these emitters. This category includes cellular phones, Personal Digital Assistants (PDAs), barcode readers and RFID devices, wireless computers and network access points, and any other transmitter that can potentially be brought close to EEDs, even to distances less than the emitter antenna's far-field distance

9.12. Near Field. The Near Field of an antenna is any location closer to the antenna than the Far Field Distance. In the Near Field, the equations for the radiated electromagnetic field must be used without simplification and calculating the coupling of EMR to a receiving antenna becomes very complicated and difficult. For example, in the Near Field of an aperture antenna, there is a reduction of antenna gain that can possibly provide some safe separation distance (SSD) relief, however, in the Near Field of a dipole antenna, there is an increase in antenna gain that increases the SSD. For a more detailed explanation of near-field calculations, see TO 31Z-10-4, Air Force EMR Hazard Program (Chapter 6, Section II, Calculating Power Density and Hazard Distance).

9.13. Safe Separation Distance (SSD). The SSD is the calculated distance from an emitter beyond which the radiated power density from that emitter has decreased to a level which is too low to couple enough energy into an EED to initiate detonation. Measurement of the SSD may take into account the vertical difference in height between the emitter and the EED or weapon meant to be protected.

9.14. Traditional Fixed-Location Emitters (TFE). The term TFE is used to describe all RF emitters that have been traditionally tracked by the Installation Spectrum Manager. These emitters are in a fixed location, usually mounted on a tower, mast or rooftop, and usually radiate a fairly high EIRP, hundreds if not thousands of Watts. These features often allow the application of "far-field" approximations to simplify the radiation theory and the application of coupling models when EMR safety requirements are being analyzed with regard to these emitters.

9.15. Transmitted Power (P_t). Transmitted power, P_t, is expressed in Watts (W). For continuous systems, the peak radiated power should be used. For pulsed systems, calculate P_t as follows:

$P_t = P_{pk}$ x PW x PRF
P_{pk} = Peak radiated power, in Watts
PW = Pulse Width, the duration of the pulse, in seconds
PRF = Pulse Repetition Frequency, the number of pulses transmitted each second, in Hz (1/sec)

Section 9C—HERO Protection Overview

9.16. Radiated Electromagnetic Energy. EEDs are typically designed to be initiated by low levels of electrical energy injected directly into the lead wires of the device. As such, they are susceptible to unintentional ignition by many forms of direct or induced electrical energy, such as from lightning discharges, static electricity, or the coupling of radio frequency (RF) energy into the lead wires. This RF energy can be transmitted by ground based or airborne emitters (antennas), both from fixed or mobile locations, and at a range of power levels and frequencies that can vary over several orders of magnitude. Once transmitted, EMR propagates at the speed of light and all electrically conducting objects in its path can potentially act as receiving antennas for this energy.

9.17. EMR Protection Information. The only way to guarantee protection of an EED from the hazards of EMR is to ensure that the EED is never located where the RF power density is sufficiently high to couple enough electrical energy into the device to initiate detonation. This seemingly simple prescription involves knowing several critical pieces of information: the RF power density present, the capability of the energy to couple into the EED, and the threshold energy required to put the EED at risk for initiation. This information is in turn dependent on the type of EED under consideration, the specific location of the EED, the configuration of the EED, and the operational tasks being performed. The complexity and layered nature of this information quickly complicates the protection process.

9.18. EMR Information Categories. All the information required to guarantee the protection of EEDs from EMR hazards can be organized into five categories of knowledge, depicted in Figure 9.1.

9.18.1. **Category A.** The location, frequency, transmitting power levels and transmitting pattern (gain) of all antennas that could potentially affect the EED.

9.18.2. **Category B.** The fundamentals of radiation theory.

9.18.3. **Category C.** The coupling models used to describe the interaction of EMR with the EEDs.

9.18.4. **Category D.** The susceptibility of the EEDs and their physical configuration when protection efforts are being considered.

9.18.5. **Category E.** The location where the operations are planned

Figure 9.1. Categories of EMR Information involved in protecting EEDs.

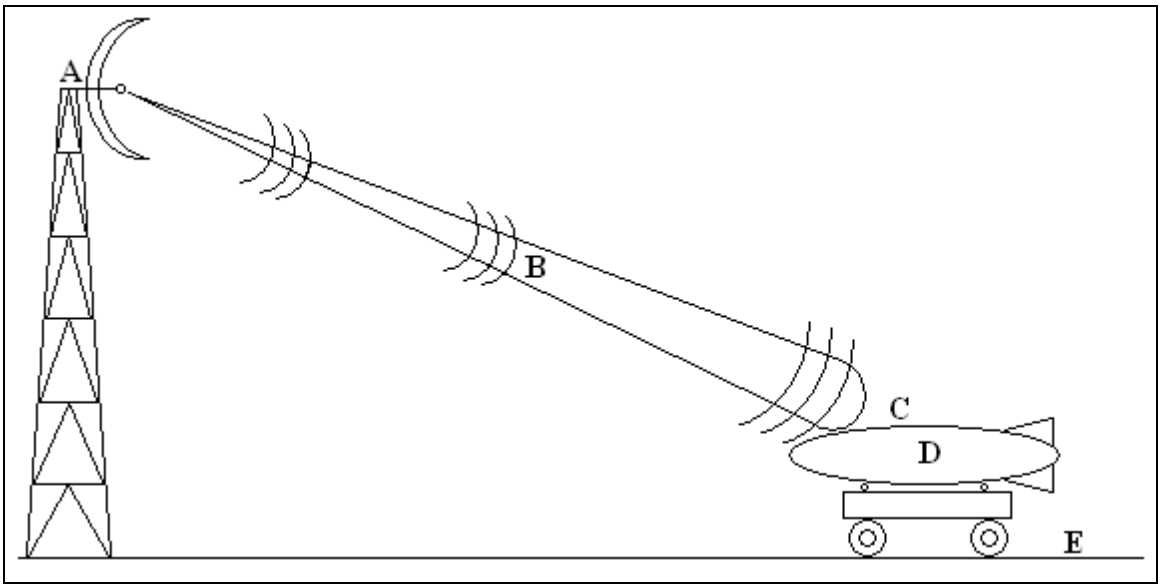

9.19. Use of EMR Information. The information in Categories A, D and E are the only ones over which the operator will have any level of control, so they will be the primary focus of this document. The Category B and C information has been predetermined by the universe we live in. However, these theories and models can and have been analyzed and applied to HERO situations using conservative approximations that simplify them to the point of being useful and fairly easy to understand. While a few of these fundamental concepts are reviewed in this document, they are presented in much more detail in other publications, including TO 31Z-10-4, Air Force EMR Hazard Program (Chapter 3, Section III, EED Hazards and Chapter 6, Section I, RF Propagation, and Section II, Calculating Power Density and Hazard Distance).

Section 9D—Responsibilities for EMR Analyses

9.20. Base-level Safety Office. The Base Safety Office (BSO) personnel at each base are responsible for:

9.20.1. Maintaining a database of RF Emitter data (Category A information) for their base.

9.20.2. Preparing and maintaining an EMR survey for their base installation. An update of this survey will be provided to munitions operators whenever changes are made and whenever HERO concerns apply.

9.20.3. Annually reviewing Category A information against munitions procedures performed on their base (see chapter 9, AFI 91-202).

9.20.4. Ensuring HERO safety procedures are conducted for EEDs on their base.

9.21. Command-level Safety Office. Command Safety Office personnel are responsible for:

9.21.1. Understanding HERO safety procedures for all operations performed by their units.

9.21.2. Providing assistance to base safety and munitions operators when requested.

9.21.3. Distributing updated HERO information to their units when it becomes available.

9.22. Communications Squadron and Installation Spectrum Manager (ISM). The Communications Squadron personnel and the Installation Spectrum Manager at each base are responsible for:

9.22.1. Assisting in the collection of Category A Info.

9.22.2. Providing base Safety Offices with RF emitter data (Category A) necessary to perform EMR Surveys and HERO safety analyses.

9.22.3. Coordinating with the base safety office prior to locating new RF emitters on the installation.

9.22.4. Coordinating with the base Safety Office prior to relocating RF emitters, or changing frequency, gain, or power characteristics of existing RF emitters on the installation.

9.22.5. Preparing and maintaining Spectrum Assignment records for their base installation. A copy of frequency authorizations will be provided to the base Safety Office.

9.23. Headquarters Air Force Safety Center/Weapons Division (AFSC/SEW). Weapons Safety personnel are responsible for:

9.23.1. Responding to all requests for assistance with the application of safety requirements in this chapter.

9.23.2. Updating SSD tables and charts when AF safety policies or regulations change.

9.23.3. Checking Federal Communications Commission (FCC) guidance at least quarterly for changes that might effect MME safety guidance.

9.23.4. Analyzing and distributing information on a case-by-case basis regarding decisions, approved use guidelines and SSD calculations for MME devices not specifically presented in this chapter.

9.24. Civil Engineering Office (CE). CE Office personnel at each base are responsible for:

9.24.1. Reporting any plans/efforts to install new emitters to the ISM and Safety Office for their base.

9.24.2. Reporting any plans/efforts to relocate any existing RF emitters, or change the frequency, gain, or power characteristics of any existing RF emitters on their base.

9.25. Munitions Squadron/Flight. The Munitions Support Squadron personnel at each base are responsible for:

9.25.1. Supplying their base Safety Office with current munitions procedures and Category E information. See **paragraph 9.18** for EMR information categories.

9.25.2. Knowing Category D info for all munitions maintained.

9.25.3. Applying Category A Info (from BSO) and Category D information into procedural planning to ensure EMR safety.

Section 9E—Emitter Categories and Assumptions

9.26. Traditional Fixed-Location Emitter (TFE) Analysis. The application of radiation theory and coupling models have historically been based on a few underlying assumptions. Emitters that meet these key assumptions will be referred to as Traditional Fixed-Location Emitters (TFEs).

9.26.1. There are two basic assumptions for most RF emitters that need to be considered for EED safety.

9.26.1.1. The emitters are in a fixed location, usually mounted on a tower, mast or rooftop.

9.26.1.2. The emitters are radiating a fairly high power level; hundreds if not thousands of Watts.

9.26.2. These assumptions allow the application of "far-field" approximations to simplify the radiation theory and coupling models when EMR safety requirements are analyzed. The resulting EMR safety requirements for EEDs were simplified to the calculation of a "Safe Separation Distance (SSD)," often hundreds of feet.

9.26.3. The choice of equations used to calculate the SSD for a TFE depends on the HERO classification of the EED (see **paragraph 9.28.1**), the frequency of the transmitted RF energy and the total EIRP of the emitter. Different equations are required for different operations because safety threshold levels vary depending on the configuration of the EED (see Table 9.1).

9.26.4. If this minimum distance (SSD) is maintained between the EED and the emitter, then the RF power density at the location of the EED, even under the most optimal transmission and the most efficient coupling conditions, will be too low to provide sufficient energy to initiate the EED.

9.26.5. HERO protection for EEDs will continue to follow this approach for TFEs.

9.27. Modern Mobile Emitter (MME) Analysis. The validity of the traditional approach for SSD determination (see paragraph 9.26) has come under increased scrutiny as the proliferation of low-power, mobile data and communications systems has undermined the assumptions at the foundation of that approach.

9.27.1. Cellular phones, Personal Digital Assistants (PDAs), barcode readers, RFID devices, wireless computers and network access points transmit at much lower power levels than more conventional emitters (TFEs), but they can also be brought much closer to EEDs, even into the near field of their antennas.

9.27.2. All low power, mobile emitters, and any low power fixed-location emitters that are part of the same system, will be referred to as Modern Mobile Emitters (MMEs).

9.27.3. While this is not an entirely new hazard for EEDs, it does require a new approach for analyzing and calculating SSDs and related safety requirements (see paragraph 9.30).

9.27.4. When unsure of the classification for an emitter, assistance should be requested (see paragraph 9.32).

Section 9F—Methods for Protecting EEDs from EMR Hazards

9.28. TFE Safety Procedures for Conventional Weapons and Individual EEDs. The following steps outline the procedures for insuring the EMR from a Traditional Fixed-location Emitter does not cause inadvertent EED initiation. This is done by maintaining a Safe Separation Distance (SSD) between the emitter and the EED.

9.28.1. **Preparation and HERO Classification.**

9.28.1. **(ACC)** Perform these steps on explosives operations that are exposed to traditional fixed-location emitters.

9.28.1.1. The following information shall be collected and reviewed prior to performing any operation involving conventional weapons or individual EEDs.

9.28.1.1.1. The configurations of the EED during the planned operation shall be determined.

9.28.1.1.2. When available, the susceptibilities of the EED in these configurations shall be obtained.

9.28.1.1.3. The EME at the location of the planned operations shall be determined. This information should be available from the ISM or the BSO.

9.28.1.2. Once this information has been collected, the HERO classification applicable to the EED for the planned operations can be determined as one of the three possibilities listed below. The EME for EIDs is given in MIL-STD-464C, paragraph 5.9.3. and tables 9 and 10. These HERO designations apply only to the planned operation that was analyzed. Any change in the operation, the EME or the EED's configuration will require reassessment of the HERO classification.

9.28.1.2.1. **HERO SAFE.** If the EED has been determined, by previously conducted engineering and scientific analysis, to be incapable of being initiated by EMR in the planned configuration and the expected EME, the EED shall be classified as HERO SAFE and no further protection from TFEs is necessary.

9.28.1.2.2. **HERO SUSCEPTIBLE.** If the EED is vulnerable to possible initiation by EMR in the planned configuration and the expected EME, the EED shall be classified as HERO SUSCEPTIBLE and protective efforts are required (see paragraph 9.28.2.2).

9.28.1.2.3. **HERO UNSAFE.** If susceptibility data for the EED in the planned configuration is available and the sensitivities of the EED are less than 54mW MNFP and/or less than 85mA MNFC, the EED shall be classified as HERO UNSAFE and additional protective efforts are required (see paragraph 9.28.2.3).

9.28.2. Determining Protection Requirements.

9.28.2.1. For EEDs classified as HERO SAFE no further protection from TFEs is necessary in its expected EME (for information about protection from MMEs, see paragraph 9.30).

9.28.2.2. For EEDs classified as HERO SUSCEPTIBLE, an SSD from each known TFE shall be determined using Table 9.1 and the expected configuration of the EED. The planned operations must be located at a distance greater than the SSD from each TFE.

9.28.2.3. For EEDs classified as HERO UNSAFE, assistance shall be requested to determine the protection requirements necessary (see paragraph 9.32).

9.28.2.4. If any of the calculated SSDs are too large for the planned operations, and if the specific susceptibility values for the EED are known, a new distance can be calculated using software available from the Joint Spectrum Center and AFSC/SEW (see paragraph 9.33).

9.28.2.5. Approximate calculations for the safe separation distances for EEDs in conventional munitions can also be made using the nomographs in Figure 9.2 and Figure 9.4.

9.28.2.6. Additional safety criteria are required if MMEs are present for munitions regardless of HERO classification. See paragraph 9.30 for guidance.

9.28.2.7. Examples of safe separation distance calculations for TFEs:

9.28.2.7.1. Scenario:

Condition of EED: HERO SUSCEPTIBLE, Exposed
Transmitter frequency = 300 MHz
Average transmitter power = 1000 watts
Antenna gain = 15dB

9.28.2.7.2. Using Table 9.1:

Step 1. Find the proper configuration and formula from Table 9.1.

Since the EED is exposed and the frequency is 300 MHz, the applicable formula is:

$$D = \left(\frac{448.625}{f}\right)\sqrt{P_t G_t} \quad \text{ft}$$

Step 2. Determine $P_t G_t$ where

Pt = 1000 watts (given),
GdB = 15
Gt = log -1 (GdB/10) = 31.6:
PtGt = (1000) (31.6) = 31,600 Watts

Step 3. Substitute these values into the formula:

$$D = \left(\frac{448.625}{300}\right)\sqrt{31600} \cong 266\ ft$$

9.28.2.7.3. Using Figure 9.2:

Step 1. Mark the point where 300 MHz lies on the frequency scale.

Step 2. Determine the effective radiated power (ERP) by multiplying PtGt where

Pt = 1000 watts (given)
Gt = log-1 (GdB/10) = log-1 (15/10) = log-1 1.5 (or Gt = 31.6):
PtGt = (1000) (31.6) = 31,600 watts.

Mark this spot on the effective radiated power scale.

Step 3. Draw a straight line through the points established in steps 1 and 2 to the distance scale. (see Figure 9.3) The recommended SSD, about 260 feet, is read where the line intersects the distance scale.

9.29. TFE Safety Procedures for Nuclear Weapons. The following steps outline the procedures for insuring the EMR from a Traditional Fixed-location Emitter does not cause inadvertent EED initiation. This is done by maintaining a Safe Separation Distance (SSD) between the emitter and the EED.

9.29.1. **Preparation/Planning.**

9.29.1.1. The following information shall be collected and reviewed prior to performing any operations involving nuclear weapons.

9.29.1.1.1. The configurations of the nuclear weapon during the planned operation must be determined.

9.29.1.1.2. The EME at the location of the planned operations shall be determined. This information should be available from the ISM or the BSO.

9.29.2. Determining Protection Requirements.

9.29.2.1. The SSD from each known TFE shall be determined using Table 9.2 and the configuration of the weapon. The planned operations must be conducted at locations greater than the SSD for each TFE.

9.29.2.2. Additional safety criteria are required if MMEs are present. See paragraph 9.30 for guidance.

9.30. MME Safety Procedures and Considerations. If any commercial, common-use transmitters fitting the category of MMEs are present in the location where EED operations are planned, the following additional guidelines shall be applied.

9.30.1. Base and Command Safety Offices may require separation distances for individual categories of MMEs greater than those listed in this paragraph. However, they may not allow the use of MMEs at distances less than the values listed below without AFSC/SEW approval (see Section 9H).

9.30.2. **General Assumptions.** Most of the emitters considered MMEs are governed by the Federal Communications Commission (FCC) and the Code of Federal Regulations (CFR), Title 47. Common, commercially obtained sources of RF energy, such as cellular phones, remote key fobs, etc., are normally governed for emission levels by FCC Part 15 or Part 22 and are identified accordingly. If compliance cannot be ascertained via markings on the device or within the owner's/user's manual, or if the planned operations occur outside

CONUS where FCC regulations are not applicable, assistance should be requested (see paragraph 9.32).

9.30.3. **"Worst-Case" Assumptions.** All guidance for MMEs is based on the same "worst case" assumptions for EED susceptibility; MNFC = 85mA, MNFP = 54mW and an additional "firing consequence factor" of -16.5dB. If the EED involved is known to have susceptibilities below these values or if the MME performance exceeds any of the Pt or Gt values listed below, assistance should be requested (see paragraph 9.32).

9.30.4. The transmission of modern mobile emitters is not authorized within 10 feet of any exposed EED, or any weapon system containing an EED except for those items specifically listed below and those specific items that have been individually researched and addressed in writing by AFSC/SEW. When a lesser distance is allowed, MMEs should still be kept at least 10 feet away whenever possible. Using any emitter closer than 10 feet should only take place if required for the proper use of the transmitting device or if required to complete the planned and approved operations, and is not justified by issues of convenience or for the sole purpose of ease of operations.

9.30.4.1. **Cellular telephones.** The SSD for all cellular telephones is 10 ft from all EEDs, regardless of configuration. This guidance assumes all cellular phones are in compliance with Title 47 CFR 22.905 which defines the allowable frequency range for cellular phones as 824 MHz to 849 MHz and Title 47 CFR 22.913 which requires a maximum equivalent isotropically radiated power (EIRP) of 7 Watts.

9.30.4.2. **Radio Frequency Identification/Automatic Identification Technology (RFID/AIT) Devices.** All HERO issues for RFID and AIT devices are being addressed by the Product Manager Joint-Automatic Identification Technology Office (PM J-AIT). The PM J-AIT is HERO certifying RFID and AIT equipment for near field operation using "worst case" guidance limitations. All SSDs calculated, approved and published by PM J-AIT for individual pieces of equipment applicable to munitions operations may be considered approved and shall be observed. Contact AFSC/SEWN for a current list of approved AIT devices.

9.30.4.3. **Wireless Computer Network Equipment.** The SSD for all wireless equipment is 2.5 ft from all EEDs, regardless of configuration. This guidance assumes all wireless computer network cards, wireless network access points, personal digital assistants, and any other similar devices present are in compliance with Title 47 CFR 15.247 which requires all wireless equipment has a maximum EIRP of 4 Watts, transmission is at or above 2.4GHz, and antennas have a maximum gain of 6dBi.

9.30.4.4. **Remote Keyless Entry Devices.** The SSD for all remote keyless entry devices (also known as "key fobs") is 0.5 ft from all EEDs, regardless of configuration. This guidance assumes all these devices are in compliance with Title 47 CFR 15.231.

9.30.5. If the operator is unsure if a device should be defined as an MME or if the operator has an MME device of a type not specifically addressed in this section, assistance should be requested (see paragraph 9.32). AFSC/SEW will analyze and distribute information regarding decisions, approved use guidelines and SSD calculations for specific devices on a case-by-case basis.

9.31. Maximum Power Density Criteria. When the minimum safe separation distances cannot be achieved, because of lack of real estate or any other limitations, a power density and field intensity survey should be made at the location where the operations are planned to occur.

9.31.1. Compare the measured power density with the recommended maximum power density calculated from Table 9.1 for conventional munitions or Table 9.2 for nuclear weapons. The measured power density must be no greater than the maximum power density provided in the table.

9.31.2. Example of power density calculation:

9.31.2.1. Scenario:

Condition of EED: HERO SUSCEPTIBLE, in nonmetallic container
Actual measured power density = 450 W/m^2
Frequency = 200 MHz

9.31.2.2. Using Table 9.1:

Step 1. Find the proper column and formula in Table 9.1.
Since the frequency is 200 MHz, the proper formula to determine maximum safe power density is:

$$P_o = 10 \times \left(\frac{f}{485}\right)^2 \frac{W}{m^2}$$

Step 2. Solve the equation:

$$P_o = 10 \times \left(\frac{200}{485}\right)^2 \frac{W}{m^2} \cong 1.7 \frac{W}{m^2}$$

Step 3. Compare the maximum safety power density to the actual measured power density.
The EED is being exposed to 450 W/m^2.
The maximum safe power density is 1.7 W/m^2.
This situation is unacceptable.

Section 9G—Assistance for EMR Analyses

9.32. Assistance Requests. When a hazardous situation is suspected or the minimum safe separation distances for a particular location are in question, request assistance from MAJCOM/SEW personnel. When classification of an emitter as a TFE or an MME is unclear or the use of an MME is desired but not specifically referenced in paragraph 9.30.4, request assistance from AFSC/SEW personnel.

9.32.1. MAJCOM/SEW personnel may request assistance from AFSC/SEW.

9.32.2. Assistance requests must include all information needed for a complete understanding of the situation. Minimum requirements are:

9.32.2.1. **Category A Information.**

9.32.2.1.1. Operating frequencies, pulse widths, pulse repetition frequencies, peak power and average power of each transmitter.

9.32.2.1.2. Gain characteristics (main and sidelobe), focal length, largest dimension, scan characteristics (rates, dwell times, angles, etc.), and height above the ground for each antenna.

9.32.2.2. **Category D Information.** Type of aircraft, ordnance, and applicable EED involved, along with available characteristics of EED (no-fire power or energy levels).

9.32.2.3. **Category E Information.** Base layout and contour map of the area. Show transportation routes of EED and ordnance subsystems, location of ordnance and EED maintenance, storage, and assembly and disassembly areas, and location of all transmitting antennas.

9.32.3. Decisions will be sent to the originating base or command, with information copies sent to all agencies involved in the decision process, and an additional copy to AFSC/SEW, if applicable.

9.33. Software Tool. The Joint Spectrum Center has an automated EMR analyses process using a software tool titled *Maximum Allowable Environment Analysis Program*. This software can generate charts for determining the maximum power density and Safe Separation Distance based on specific antenna characteristics and known EED susceptibility values. The reasoning and decision to use any SSD calculated with this software program shall be documented in local procedural instructions. Copies of this software are available from AFSC/SEWN.

Section 9H—Deviations to EMR Requirements

9.34. Deviations to EMR Requirements. Use the criteria in this chapter unless a deviation has been authorized for a given hazard in accordance with paragraph 1.4. If a deviation to the guidance given in this chapter has been authorized, take the following action as appropriate:

9.34.1. When the findings apply to a given weapon system, piece of equipment, or explosive item, the applicable weapons system or other TO must be changed to include the criteria. The agency requesting assistance will notify the command and activity responsible for the TO of the required changes, with information copies to all concerned parties.

9.34.2. When circumstances make it appropriate, details of the situation and the authority and basis of the approved criteria will appear in permanent base or unit publications.

Table 9.1. Recommended Power Densities and SSDs for HERO SUSCEPTIBLE Munitions.

"Worst-Case"	Maximum Allowable Power Density	Safe Separation Distance (SSD)
$f < 0.005\,\text{MHz}$	$P_o = 100\,\frac{W}{m^2}$	$D = 0.0925\sqrt{P_t G_t}$ ft
$0.005\,\text{MHz} < f < 2\,\text{MHz}$	$P_o = \left(\frac{0.05}{f}\right)^2 \frac{W}{m^2}$	$D = 18.5\,f\sqrt{P_t G_t}$ ft
$2\,\text{MHz} < f < 80\,\text{MHz}$	$P_o = 6.25\text{x}10^{-4}\,\frac{W}{m^2}$	$D = 37.0\sqrt{P_t G_t}$ ft
$80\,\text{MHz} < f < 32000\,\text{MHz}$	$P_o = \left(\frac{f}{3200}\right)^2 \frac{W}{m^2}$	$D = \left(\frac{2960}{f}\right)\sqrt{P_t G_t}$ ft
$32000\,\text{MHz} < f$	$P_o = 100\,\frac{W}{m^2}$	$D = 0.0925\sqrt{P_t G_t}$ ft
"Exposed EED"	Maximum Allowable Power Density	Safe Separation Distance (SSD)
$f < 0.02\,\text{MHz}$	$P_o = 100\,W/m^2$	$D = 0.0925\sqrt{P_t G_t}$ ft
$0.02\,\text{MHz} < f < 2\,\text{MHz}$	$P_o = \left(\frac{0.2}{f}\right)^2 \frac{W}{m^2}$	$D = 4.625\,f\sqrt{P_t G_t}$ ft
$2\,\text{MHz} < f < 48.5\,\text{MHz}$	$P_o = 0.01\,W/m^2$	$D = 9.25\sqrt{P_t G_t}$ ft
$48.5\,\text{MHz} < f < 4850\,\text{MHz}$	$P_o = \left(\frac{f}{485}\right)^2 \frac{W}{m^2}$	$D = \left(\frac{448.625}{f}\right)\sqrt{P_t G_t}$ ft
$4850\,\text{MHz} < f$	$P_o = 100\,W/m^2$	$D = 0.0925\sqrt{P_t G_t}$ ft
"In Storage or Ground Transport in a Non-Metallic Container"	Maximum Allowable Power Density	Safe Separation Distance
$f < 0.06325\,\text{MHz}$	$P_o = 100\,W/m^2$	$D = 0.0925\sqrt{P_t G_t}$ ft
$0.06325\,\text{MHz} < f < 2\,\text{MHz}$	$P_o = 10 \times \left(\frac{0.2}{f}\right)^2 \frac{W}{m^2}$	$D = 4.625\,f\sqrt{\frac{P_t G_t}{10}}$ ft
$2\,\text{MHz} < f < 48.5\,\text{MHz}$	$P_o = 0.1\,W/m^2$	$D = 2.925\sqrt{P_t G_t}$ ft
$48.5\,\text{MHz} < f < 1533.7\,\text{MHz}$	$P_o = 10 \times \left(\frac{f}{485}\right)^2 \frac{W}{m^2}$	$D = \left(\frac{448.625}{f}\right)\sqrt{\frac{P_t G_t}{10}}$ ft
$1533.7\,\text{MHz} < f$	$P_o = 100\,W/m^2$	$D = 0.0925\sqrt{P_t G_t}$ ft
"In Storage or Ground Transport in a Metallic Container" Or "In or On an Aircraft"	Maximum Allowable Power Density	Safe Separation Distance
All Frequencies	$P_o = 100\,W/m^2$	$D = 0.0925\sqrt{P_t G_t}$ ft
Leadless EED	Maximum Allowable Power Density	Safe Separation Distance
All Frequencies	N/A	$D = 10$ ft

Notes for Table 9.1:

1. For the formulas in this table:

f = frequency (MHz)

P_t = transmitter power (W); calculate P_t as defined in paragraph 9.15.

G_t = antenna gain (see **paragraph 9.3** to convert from G_{dB})
Power Density conversion: 10 W/m^2 = 1 mW/cm^2.

2. When more than one transmitter is operating in an area, each at a different frequency, the maximum allowable power density is the greatest power density calculated for each of the transmitters.

3. Formulas in this table apply to the far field of the antenna only. Far field is determined as stipulated in paragraph 9.7. For near field requirements, see TO31Z-10-4, Air Force EMR Hazard Program (Chapter 6, Section II).

4. For frequencies outside the ranges specified in this table, assistance should be requested (see **paragraph 9.32**).

5. Recommended Maximum Allowable Power Densities for HERO SUSCEPTIBLE Munitions do NOT include personnel exposure limit considerations. While "Exposed EED" values are all below personnel exposure limits as specified in AFOSHSTD 48-9, "*Radio Frequency Radiation (RFR) Safety Program,*" additional guidance should be reviewed for operations involving EEDs "In Storage or Ground Transport in a Non-Metallic Container," for EEDs "In Storage or Ground Transport in a Metallic Container,"or for EEDs "In or On an Aircraft".

6. Configuration Descriptions:

Worst-Case. When EEDs are unshielded, or the leads or circuitry could inadvertently be formed into a resonant dipole or loop antenna, or the configuration of the EEDs is unknown.

Exposed EED. When EEDs are exposed due to maintenance, assembly, or disassembly or the item or munition which contains the EED is exposed due to maintenance, assembly, or disassembly.

EEDs in Storage or Ground Transport in a Non-Metallic Container. When EEDs are stored or in a ground transport configuration inside a non-conductive (non-metallic) container such as wood or plastic.

EEDs in Storage or Ground Transport in a Metallic Container. When EEDs are stored or in a ground transport configuration inside a conductive (metallic) container. This includes EEDs assembled in a weaponized configuration when the weapon case provides a conductive shield.

EEDs In or On an Aircraft. When EEDs or the item or munition containing them are in a transport configuration inside cargo aircraft or externally loaded on an aircraft.

Leadless EEDs. When EEDs don't have lead wires and are in original shipping configurations and/or containers.

7. When handling or installing EEDs, use "Exposed EED" configuration even though leadless EEDs are involved, since weapon systems wiring could form a resonant antenna during installation.

8. When unclear about the appropriate configuration to apply, use the most conservative, i.e., the greatest distance or largest power density.

9. Approximate calculations for the safe separation distances for EEDs in conventional munitions can also be made using the nomographs in Figure 9.2 and Figure 9.4

Table 9.2. Recommended EED Power Densities and SSDs for Nuclear Weapons.

"Exposed"	Maximum Allowable Power Density	Safe Separation Distance (SSD)
$f < 0.0132\,\text{MHz}$	$P_o = 100\,\text{W/m}^2$	$D = 0.0925\sqrt{P_t G_t}$ ft
$0.0132\,\text{MHz} < f < 8\,\text{MHz}$	$P_o = \left(\frac{0.132}{f}\right)^2 \frac{\text{W}}{\text{m}^2}$	$D = 7.01 f \sqrt{P_t G_t}$ ft
$8\,\text{MHz} < f < 4850\,\text{MHz}$	$P_o = \left(\frac{f}{485}\right)^2 \frac{\text{W}}{\text{m}^2}$	$D = \left(\frac{448.625}{f}\right)\sqrt{P_t G_t}$ ft
$4850\,\text{MHz} < f < 45000\,\text{MHz}$	$P_o = 100\,\text{W/m}^2$	$D = 0.0925\sqrt{P_t G_t}$ ft
"In Storage or Transport"	Maximum Allowable Power Density	Safe Separation Distance
$f < 1\,\text{MHz}$	$P_o = 100\,\text{W/m}^2$	$D = 0.0925\sqrt{P_t G_t}$ ft
$1\,\text{MHz} < f < 18.42\,\text{MHz}$	$P_o = 26.53\,\text{W/m}^2$	$D = 0.18\sqrt{P_t G_t}$ ft
$18.42\,\text{MHz} < f < 30\,\text{MHz}$	$P_o = \frac{9000}{f^2} \frac{\text{W}}{\text{m}^2}$	$D = \left(\frac{f}{102.5}\right)\sqrt{P_t G_t}$ ft
$30\,\text{MHz} < f < 300\,\text{MHz}$	$P_o = 10\,\text{W/m}^2$	$D = 0.2925\sqrt{P_t G_t}$ ft
$300\,\text{MHz} < f < 3000\,\text{MHz}$	$P_o = \frac{f}{30} \frac{\text{W}}{\text{m}^2}$	$D = 5.066\sqrt{\frac{P_t G_t}{f}}$ ft
$3000\,\text{MHz} < f < 45000\,\text{MHz}$	$P_o = 100\,\text{W/m}^2$	$D = 0.0925\sqrt{P_t G_t}$ ft

Notes for Table 9.2:
Notes 1 through 4 for Table 9.2 are exactly the same as Notes 1 through 4 for Table 9.1.

5. Recommended Maximum Allowable Power Densities for Nuclear Weapons include considerations for personnel exposure limits as specified in AFOSHSTD 48-9, "*Radio Frequency Radiation (RFR) Safety Program.*"

6. Configuration Descriptions:

Exposed EEDs. EEDs exposed due to maintenance, assembly, or disassembly.

EEDs in Storage or Transport. EEDs assembled in a weaponized configuration for storage or ground transportation.

Figure 9.2. Recommended SSD for HERO SUSCEPTIBLE Munitions; "Exposed" Configuration.

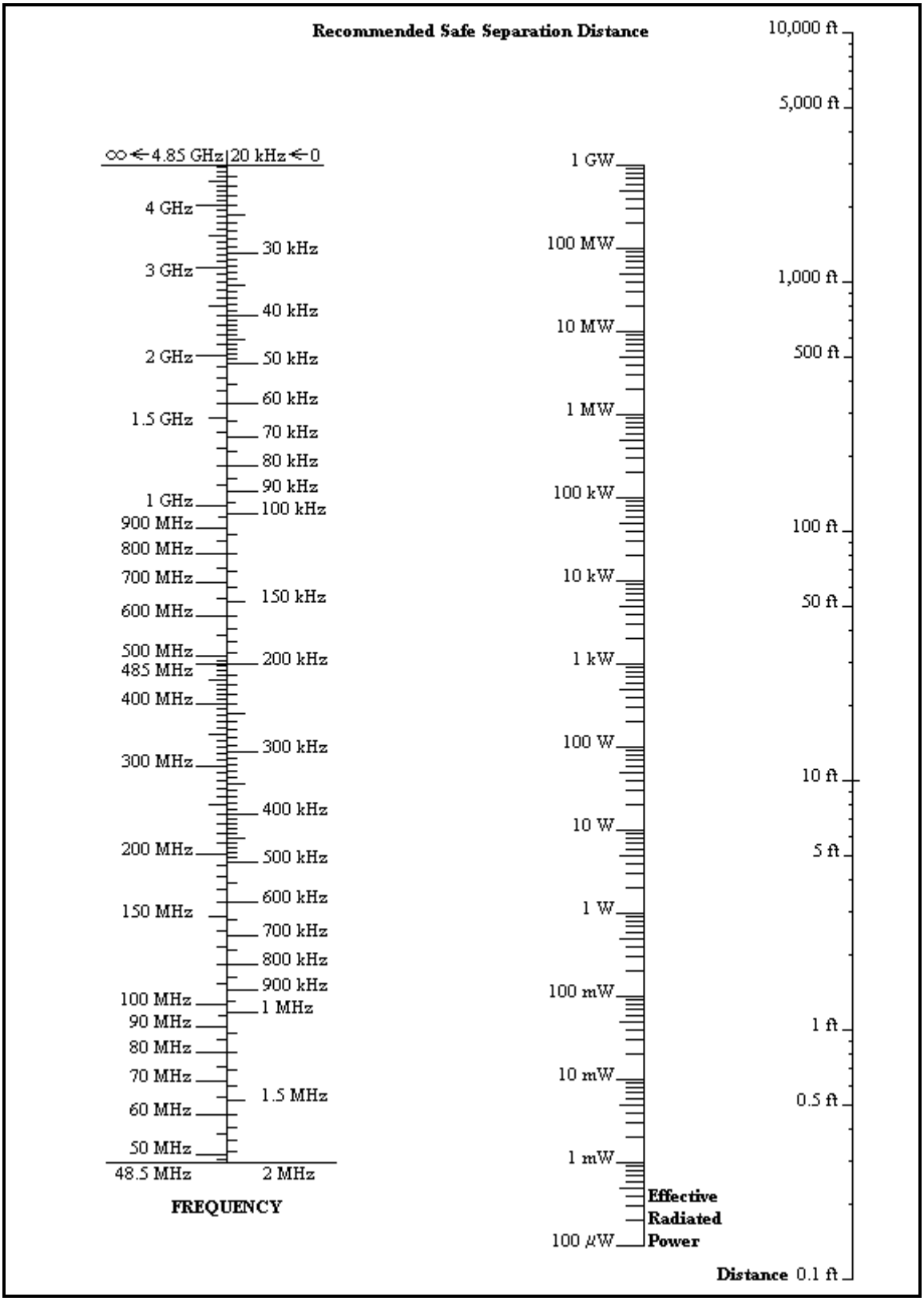

Figure 9.3. Example: Recommended SSD for HERO SUSCEPTIBLE Munitions; "Exposed" Configuration.

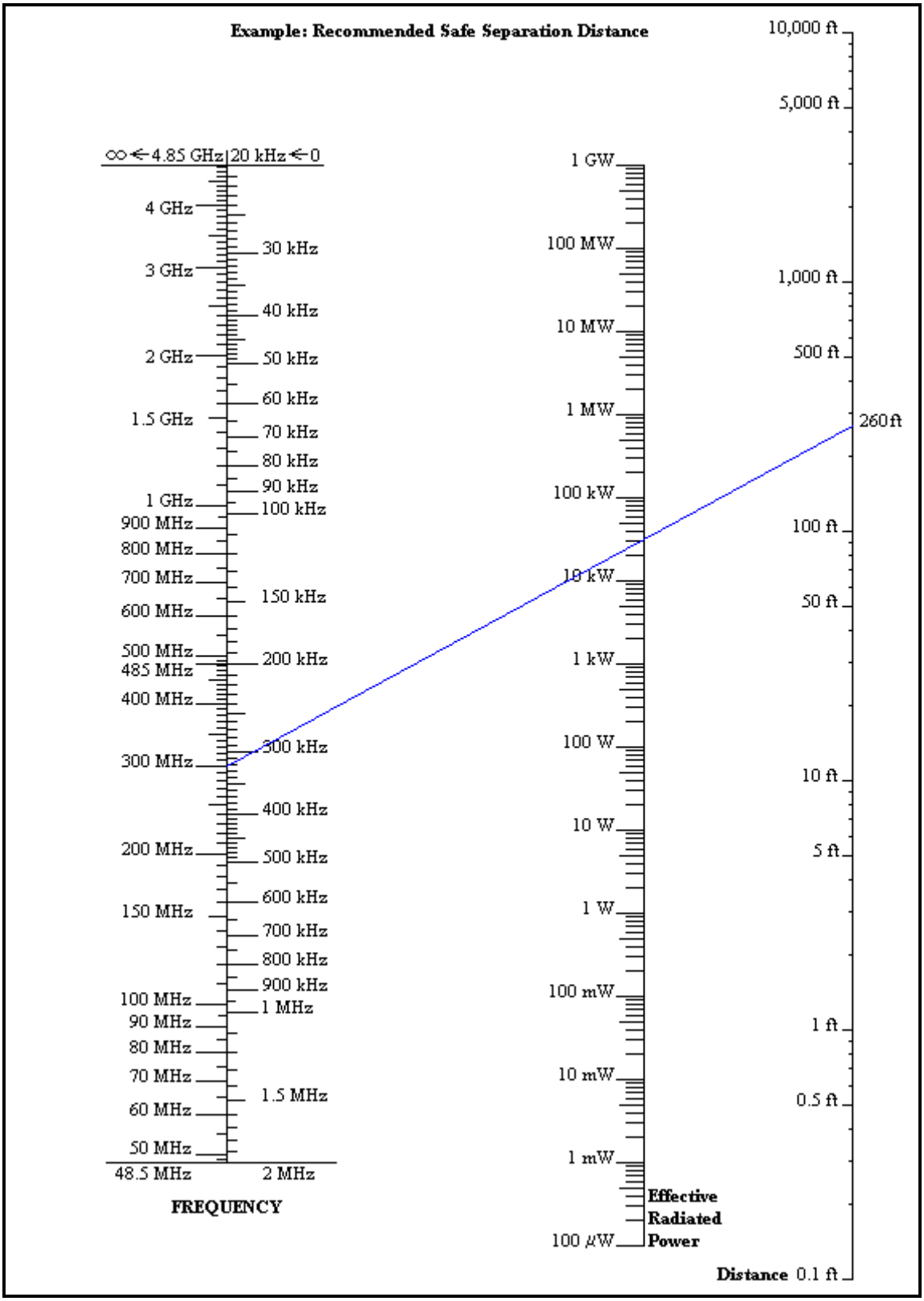

Figure 9.4. Recommended SSD for HERO SUSCEPTIBLE Munitions; "In Storage or Ground Transport in a Non-Metallic Container" Configuration.

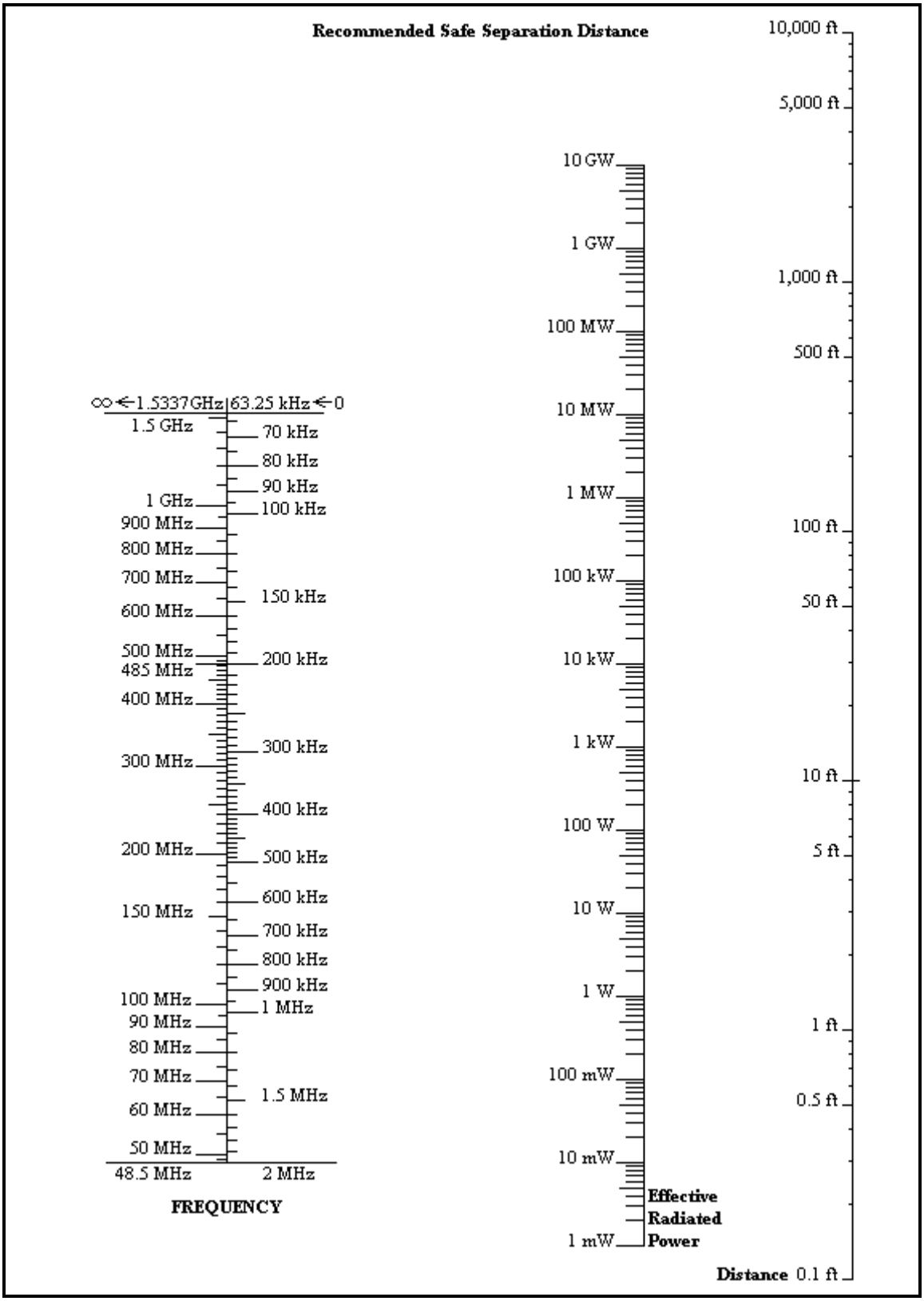

Chapter 10

FIREFIGHTING, EMERGENCY PLANNING AND FIRE PREVENTION

Section 10A—Hazard Identification for Firefighting and Emergency Planning

10.1. Scope and Applicability.

10.1.1. This section establishes standard firefighting hazard identification measures to ensure a minimum practicable risk in fighting fires involving AE. These identification measures are based on the classification of AE fires into four fire divisions according to their predominant hazard.

10.1.2. AE hazard symbols and supplemental symbols including chemical agent symbols (see paragraph 10.4) are for firefighting situations.

10.2. Fire Divisions. There are four fire divisions. Fire division 1 indicates the greatest hazard. The hazard decreases with ascending fire division numbers from 1 to 4, and are related to HD as shown in Table 10.1. The hazard is based on the burning or explosives characteristics of the material. Fire symbols do not apply to liquid propellants, except for symbol 1, which is used to indicate a detonation hazard of Group IV propellant. Fire protection for insensitive high explosives (both bulk and filled items) is based on their equivalent storage classification.

10.3. Fire Division Symbols.

10.3.1. The four fire divisions are represented by four distinctive symbols so that firefighting personnel can recognize the hazards. A fire division number is shown on each symbol. For the purpose of identifying these symbols from long range, the symbols differ in shape as shown in Figure 10.1.

10.3.2. The shape and dimensions of the symbols are shown in Figure 10.1. This shape and color scheme is consistent with the requirements of the North Atlantic Treaty Organization (NATO), United Nations Organization (UNO), and International Maritime Organization (IMO).

10.4. Chemical Agent and Chemical Munition Hazard Symbols.

10.4.1. The storage of chemical agents and chemical munitions requires the use of chemical hazard symbols. These symbols (see Figures 10.2 and 10.3) will be used in conjunction with fire symbols, where appropriate. Some of the common chemical agents used in AE, the CG of that AE, and the chemical hazard symbols required in storage are specified in Table 10.2.

10.4.2. The following sections describe these symbols, the hazards indicated by the symbols, and the recommended protective clothing and equipment to be used for fighting fires involving these chemical agents and chemical munitions. Where respiratory protection (SCBA and protective masks) are used, personnel must implement a workplace respiratory protection program IAW AFOSH Std 48-137, *Respiratory Protection Program.* (Reference the item T.O., or contact Bioenvironmental Engineering for protective clothing requirements for situations other than firefighting. The self-contained breathing apparatus (SCBA) and other protective clothing and equipment prescribed in this paragraph must be used if required for use by other applicable technical orders or other Department of Defense or Air Force

publications. See AFI 10-2501, *Air Force Emergency Management (EM) Program Planning and Operations* for further guidance.)

10.4.2.1. Set 1 of Chemical Hazard Symbol 1 requires full protective clothing (see Figure 10.2 and Table 10.2) and indicates the presence of highly toxic chemical agents that may cause death or serious damage to body functions. The following full protective clothing will be used: Level A encapsulating suit IAW T.O. 14P3-1-7, *Toxicological Protective Apron, M-2.*

10.4.2.1.1. SCBA.

10.4.2.1.2. Impermeable suit.

10.4.2.1.3. Impermeable hood.

10.4.2.1.4. Impermeable boots.

10.4.2.1.5. Impermeable undergarments.

10.4.2.1.6. Impermeable coveralls.

10.4.2.1.7. Impermeable protective footwear.

10.4.2.1.8. Impermeable gloves.

10.4.2.2. Set 2 of Chemical Hazard Symbol 1 requires full protective clothing (see Figure 10.2 and Table 10.2) and indicates the presence of harassing agents (riot control agents and smokes). The following protective clothing will be used:

10.4.2.2.1. Protective gas masks or SCBA.

10.4.2.2.2. Permeable coveralls.

10.4.2.2.3. Protective gloves.

10.4.2.2.4. Firefighting personnel equipped with normal heat-resistant clothing (e.g., bunker suit) and gas mask or SCBA do not require the set 2 protective clothing.

10.4.2.3. Set 3 of Chemical Hazard Symbol 1 requires full protective clothing (see Figure 10.2 and Table 10.2) and indicates the presence of white phosphorous (WP) or other spontaneously combustible material. The following protective clothing will be used:

10.4.2.3.1. Protective gas masks or SCBA.

10.4.2.3.2. Flameresistant coveralls.

10.4.2.3.3. Flameresistant gloves.

10.4.2.3.4. Firefighting personnel equipped with normal heat-resistant clothing (e.g., bunker suit) and gas mask or SCBA do not require the set 3 protective clothing.

10.4.2.4. Chemical Hazard Symbol 2 requires the wearing of breathing apparatus (see Figure 10.2 and Table 10.2) and indicates the presence of incendiary or readily flammable chemical agents that present an intense radiant heat hazard. Protective masks will be used to prevent inhalation of smoke from burning incendiary mixtures.

10.4.2.5. Chemical Hazard Symbol 3 warns against applying water (see Figure 10.2 and Table 10.2) and indicates a dangerous reaction will occur if water is used in an attempt to extinguish fire.

10.5. Obtaining Firefighting Symbol Decals. Decals for fire and chemical hazard symbols may be obtained through normal Air Force supply channels. National stock numbers (NSN) of standard and half-size decals are listed in Figures 10.1, 10.2 and 10.3. Make backing for fire symbol decals the shape of the decal and out of non-combustible material. If heat from the fire burns off the numbers, the fire department can act on the shape. AFVA 91-216, *USAF Explosives Fire and Chemical Hazard Symbols*, is available through publication channels.

Section 10B—Posting Firefighting Symbols

10.6. Purpose of Posting Firefighting Symbols. Firefighting symbols are used as a back-up precaution for alerting response personnel to explosives or chemicals present. Firefighting symbols posted on nuclear, chemical, or conventional weapon storage sites will comply with paragraph 10.7, unless otherwise directed by the Base Fire Chief (direction must be in writing). These written directions notify personnel that local conditions (e.g., security considerations) may make it undesirable to identify munitions with fire symbols at the actual storage locations.

10.7. Posting Requirements for Firefighting Symbols.

10.7.1. Post the fire symbol and chemical symbol that applies to the most hazardous material present at non-nuclear explosives locations.

10.7.2. When non-class 1 hazardous items or materials are stored or used in a facility, without other items of class 1, identify the predominant hazard to guide emergency response personnel. In this case, placards are required in accordance with NFPA and OSHA regulations. (Do not display NFPA and OSHA placards concurrently with class 1 fire symbols.)

10.7.3. Post firefighting symbols when AE or chemical agents are placed in a facility or location, and remove the symbols when the AE or chemical agents are removed. The person in charge of the operation is responsible for posting or changing the symbols.

10.7.4. Notify the Emergency Communication Center (ECC) each time firefighting symbols are changed.

10.7.5. Half-sized symbols may be used on doors or lockers inside buildings.

10.7.6. Licensed Explosives Storage Locations.

10.7.6.1. Post symbols on exterior and interior entrances to small rooms licensed for storing AE.

10.7.6.2. Post symbols on lockers or containers licensed for storing AE.

10.7.6.3. Posting symbols on the exterior of buildings containing licensed storage locations are optional, provided the Base Fire Chief approves in writing. When posted, ensure symbols are visible from all approach roads.

10.7.7. Non-Flightline Sited Explosives Locations.

10.7.7.1. Ensure symbols are visible from all approach roads.

10.7.7.2. When one symbol applies to all AE within a storage area or on a service road, it may be posted at the entry control point or row entrance.

10.7.7.3. Post individual symbols on each door of a multicube storage magazine. Post the symbol for the highest hazard and applicable sets to be visible from all approach roads.

10.7.8. Flightline Sited Explosives Locations.

10.7.8.1. Identify aircraft loaded with non-nuclear weapons with symbols posted at each aircraft or aircraft shelter.

10.7.8.2. One fire symbol may be posted at the entry point (point of entry for fire-fighting personnel) to an aircraft area.

10.7.8.3. Notify the ECC when each aircraft is loaded or unloaded. Give aircraft parking location and type of explosives involved.

10.7.8.4. During mass loading of three or more aircraft, when a fire truck is present, notify the ECC as soon as the last loading is complete.

10.8. Exceptions to Posting Firefighting Symbols.

10.8.1. Locations with aircraft having only exempted devices according to paragraph 12.47. This exception does not apply to explosives cargo.

10.8.2. Missile sites with a single type of weapon system, such as ICBM sites.

10.8.3. Locations with 1,000 rounds or less of HD 1.4 small arms ammunition.

10.8.4. When, by agreement, host nation symbols are used.

10.8.5. When the responsible commander temporarily orders them removed for emergency security purposes.

10.8.6. Locations storing or maintaining nuclear weapons or both nuclear and non-nuclear weapons. Maintain a map or listing of munitions locations. Use line numbers or symbols from T.O. 11N-20-11, *General Firefighting Guidance*, for nuclear weapons. Provide this information to the Fire Department. Update as changes occur.

10.8.7. Aircraft loaded with nuclear weapons or with non-nuclear and nuclear weapons within the same designated area.

10.8.8. Aircraft in a designated explosives parking area if described in a local publication. Include the class/division, governing symbol, emergency procedures and the requirement to notify the Fire Department.

Section 10C—Firefighting Measures and Withdrawal Distances

10.9. Firefighting Measures.

10.9.1. Fires involving conventional munitions cannot be definitized to any one set of circumstances and environmental conditions. This precludes development of reliable standardized test criteria and reliable specific item fire fighting and withdrawal times. The conclusion to be reached from available data is that a munitions reaction to fire is a function of case thickness and type of explosive filler which can be varied by environmental

conditions. Since the circumstances of a fire cannot be predicted, specific item by item fire fighting and withdrawal times cannot be determined with any degree of reliability.

10.9.2. Firefighters shall have a thorough knowledge of the hazards associated with AE fires and expected AE reactions. The firefighting forces and other essential personnel will be briefed before approaching the scene of the fire. They will be informed of the known hazards and conditions existing at the fire scene prior to proceeding to the fire location.

10.9.3. Fires involving AE will be fought according to the HD, fire division, the progression of the fire, and the procedures specified in this Manual.

10.9.4. All fires starting in the vicinity of ammunition or explosives shall be reported and fought immediately with all available means to prevent the spreading of fire and munitions involvement. However, if fire engulfs explosives material or is supplying heat to it, or if the fire is so large that it cannot be extinguished with the equipment on hand, personnel involved shall evacuate and seek safety. See table 10.1 for additional information and when required, evacuate personnel per paragraph 10.10.

10.10. Fire Withdrawal Distances. Commanders are responsible for developing evacuation plans that include the applicable withdrawal distances as part of the installation's emergency planning (see paragraph 10.13).

10.10.1. **Non-essential personnel.** These emergency withdrawal distances apply in emergency situations only and are not to be used for facility explosives siting.

10.10.1.1. The initial withdrawal distance for non-essential personnel will be at least IBD for the PES involved. If the fire involves AE, AE involvement is imminent, or the fire is or may become uncontrollable, then use the fire withdrawal distances listed in Table 10.3. The fire withdrawal distances depend on fire involvement and on whether or not the HD, fire division and quantity of explosives are known.

10.10.1.1. **(ACC)** Use **Table 10.3** for withdrawal distances in lieu of the potential explosive site clear zone.

10.10.1.2. Structures or protected locations offering equivalent protection for the distances in Table 10.3 may be used in lieu of relocating personnel from the structure or location to the specified fire withdrawal distance.

10.10.2. **Essential personnel.** Emergency authorities on-site will determine who qualify as, and the withdrawal distance for, essential personnel at accidents.

10.10.3. **Chemical Agents.** AE containing both explosives and chemical agents (see Table 10.2) requires special attention and precautions in firefighting. Fires involving such AE will be fought in accordance with their fire division characteristics. Responding personnel must consider the additional hazards and precautions for the chemical agents involved.

10.10.4. **Underground Explosives Facilities.** Entry to underground explosives facilities following a fire or explosion requires special precautions. Emergency personnel will monitor for the presence of toxic fumes or oxygen depleted atmospheres, and will evaluate structural damage during initial entry following an accident. Commanders will develop written procedures that define actions in such emergency situations (see paragraph 10.13).

10.10.5. **Nuclear Weapons.** Nuclear weapons fire withdrawal distances are listed in T.O. 11N-20-11, *General Fire Fighting Guidance*.

10.11. Improvised Explosive Device Withdrawal Distances. Withdraw all non-essential personnel in accordance with AFPAM 10-100, *Airman's Manual*. Personnel shall be behind or under cover. Withdraw to the following MINIMUM distances: 500 feet if the IED is a small item or box (up to 2 cu ft), 1,000 feet if the IED is a barrel or car (up to 15 cu ft), 1,500 feet if the IED is a van or truck, or 2,000 feet and beyond if the IED is a vehicle larger than already described. Responding command authorities and EOD teams will evaluate and adjust these distances if needed. Distances are for initial evacuation until command authorities and EOD teams evaluate the incident.

10.12. Withdrawal Distances for AE Not Involved in Fire. The initial decision to evacuate non-essential personnel will be based on the type of AE involved and its susceptibility to become more unstable, armed, or hazardous. Good judgment, with regards to protecting personnel from the hazards of the AE or surrounding area, must be exercised. When evacuation is considered necessary, or is required by other technical guidance, clear the area to a distance of 300 feet (125 feet for simulators and smoke producing devices). Withdrawal distances may be adjusted by the incident commander.

Section 10D—Emergency Planning

10.13. Emergency Planning. Commanders will develop an emergency management plan designed to provide safety, security, and environmental protection for accidents involving AE. Plans will be coordinated with the applicable federal, state, and local emergency response authorities (e.g., law enforcement, fire departments, hospitals, etc.) and any established Local Emergency Planning Committees (LEPC). In addition to requirements prescribed in AFI 10-2501, *Air Force Emergency Management (EM) Program Planning and Operations*, the plan will include the following:

10.13.1. Specific sections and guidance that address withdrawal distances, emergency preparedness, contingency planning, and security. The developed EM plan will limit access to accident sites to trained and authorized personnel.

10.13.2. Procedures that minimize the possibility of an unpermitted or uncontrolled detonation, release, discharge, or migration of AE out of any storage unit when such release, discharge, or migration may endanger human health or the environment.

10.13.3. Provisions for prompt notification (to include withdrawal distances) to emergency response and environmental agencies and the potentially affected public for an actual or potential detonation or uncontrolled release, discharge, or migration of AE that may endanger human health or the environment.

10.13.4. Provisions for complying with the Emergency Planning Community Right-To-Know Act (EPCRA) and Air Force implementing policies.

10.13.5. Each unit and installation fire protection agency with AE storage and operations must develop pre-fire plans as prescribed by AFI 32-2001, *Fire Emergency Services Program.* Include all AE locations and operations, to include licensed explosives storage locations.

10.13.6. Each ECC will have an area map or computer-generated display showing all AE locations and operations and their firefighting symbols, to include licensed explosives storage locations. This map must also show adjacent facilities at risk from explosives. Whenever possible, ensure all sites have a CE real property identification number.

10.14. Fire Drills. Drills are conducted to train firefighting forces and unit personnel, and to ensure all other personnel involved understand their duties. They are also conducted to evaluate fire alarm systems, firefighting equipment, and evacuation procedures.

10.14. (ACC)Munitions Control will maintain at a minimum a record of the last two fire drills.

10.14.1. Fire drills will be held within the explosives storage area at intervals not to exceed 6 months.

10.14.1. **(ACC)** The Fire Department will participate in at least one fire drill during the year.

10.14.2. Coordinate fire drills with the Base Fire Chief if a Fire Department response is involved. This does not preclude unannounced drills of a Fire Department's response capabilities, provided coordination with the Base Fire Chief is accomplished at least 30 minutes before starting the drill.

10.14.3. Personnel responsible for conducting drills will ensure all involved are aware that the drill is an exercise, and not an actual fire.

Section 10E—Fire Prevention

10.15. Heat-Producing Devices. In any explosives area, use devices that produce temperatures higher than 228o F (109o C) temporarily and only when essential. Develop written safety procedures for these devices and include details on the location, purpose, and duration of use. Coordinate the procedures through the installation safety office and the Fire Department for approval. Properly installed, approved furnaces and electrical space heaters are exempt. Heat-producing devices are not allowed where exposed explosives are present. Ensure personnel are qualified on the equipment prior to use.

10.16. Vegetation Control. The primary purpose of vegetation control is to limit the probability of combustible vegetation catching fire and to slow the spread of vegetation fires.

10.16.1. Except for firebreaks, maintain grounds in or near explosives storage areas or operating locations according to AFI 32-7064, *Integrated Natural Resources*. Limit maintenance on these grounds to that which is necessary to prevent erosion or other waste of natural resources.

10.16.2. Balance the level of vegetation control with operational factors, such as cost to control, security, erosion prevention, and passive defense (camouflage).

10.16.3. Use varieties of vegetation that are resistant to burning where feasible.

10.16.4. Do not use herbicides or soil sterilants if complete removal of vegetation will tend to cause soil erosion.

10.16.5. Do not allow dead or cut vegetation to accumulate.

10.16.6. When animals are used for vegetation control on barricade surfaces and igloo earth cover, avoid overgrazing to prevent erosion.

10.17. Firebreaks. Where environmental and security factors allow, maintain 50-foot firebreaks around each PES except for ECMs. Maintain 5 feet around ECM ventilators.

10.18. Controlled Burning. The Base Fire Chief approves and provides oversight for controlled burning of vegetation.

10.18.1. Do not conduct controlled burning within 200 feet of any explosives location.

10.18.2. Close windows, doors and ventilators of facilities containing explosives within 600 feet of burning operations.

10.18.3. All controlled burns will be accomplished according to approved, site specific burn plans. See AFI 32-7064, *Integrated Natural Resources Management* for additional information.

10.18.4. The Base Fire Chief determines firefighting personnel and equipment to be present during burning operations.

10.19. Flammable Liquids for Cleaning. Do not use flammable liquids for cleaning purposes within an explosives area or near explosives, except as authorized by T.O. Confine use to specific designated work areas. In-use stocks may not exceed a one-day supply. Store in approved safety containers or dispensers.

10.20. Paint and Other Flammable Materials. The following guidance applies when using paint and other flammable materials in AE locations.

10.20.1. Comply with AFOSH Standard 91-501, *Air Force Consolidated Occupational Safety Standard.* Store flammable materials in approved flammable storage cabinets, as required.

10.20.2. Small quantities of flammable materials, such as paints, lubricants and solvents, required to support explosives maintenance operations may be stored in explosives operating locations as required. This storage must not be the primary purpose of the area. Incidental storage of flammable materials not supporting explosives maintenance operations may be authorized within 50 feet of explosives operating locations. Fire department officials shall be consulted prior to establishing flammable storage areas in or near explosives operating locations.

10.20.3. Do not store materials that add fuel sources (such as wood, paper, and rags) with flammable materials.

10.20.4. Open containers of flammable materials only when in use.

10.20.5. For outdoor storage, place flammable materials in weatherproof containers.

10.20.6. Locate flammable storage locations at least 50 feet from explosives locations or isolate flammable storage by standard fire walls approved for the type and quantity of flammables being stored.

10.20.7. Make available at least one fire extinguisher with a rating suitable for the type of material involved within the distance prescribed by AFOSH 91-501.

10.21. Operating Support Equipment. The following guidance applies when operating support equipment (not including vehicles powered by internal combustion engines in AE locations.)

10.21.1. Separation Distances.

10.21.1.1. Locate equipment at least 25 feet from AE. Equipment may be closer provided adequate ventilation and a fire-resistant dividing wall are provided.

10.21.1.2. Place aircraft ground support equipment as far away from AE as the length of the power cord, the length of the hose, or other equipment limitation will allow or as directed by applicable T.O.

10.21.2. Equipment designed into and installed as part of an operating or storage facility is exempt from paragraph 10.21.1.

10.21.3. Operations in hardened aircraft shelters are exempt from paragraph 10.21.1

10.21.4. Do not refuel equipment within 100 feet of AE.

10.22. Stacking Combustible Material. The following guidance applies when stacking combustible material in AE locations.

10.22.1. Stack containers, dunnage, lumber and so forth in an orderly manner.

10.22.2. Keep stacks stable and separated as far as practical from operations.

10.22.3. Limit stacks to 9,000 cubic feet.

10.22.4. Do not place bulk stacks of combustible materials closer than 100 feet from AE locations.

10.22.5. If necessary, stack working quantities in the vicinity of AE. Remove all of the material upon completion of the operation or at intervals that prevent hazardous accumulation.

10.22.6. Provide suitable fire protection equipment.

10.22.6. **(ACC)** The design fire protection engineer shall propose and receive specific approval from the ACC Command Fire Protection Engineer for the proposed fire protection equipment in the absence of regulatory guidance/requirements.

10.22.7. When needed to prepare for combat operations, temporarily stack in or near the AE storage site those empty containers, dunnage, and lumber that cannot be removed while the work is in progress.

10.23. Fire Extinguishers. Unless otherwise directed by the Base Fire Chief, provide a minimum of two serviceable fire extinguishers, suitable for the hazards involved, for immediate use at any location where AE is being handled, except as noted.

10.23.1. See paragraph 11.7.8 for licensed explosives storage locations.

10.23.2. Provide each explosives-laden vehicle used for transport with at least two portable 2A:10BC rated extinguishers. One extinguisher will be mounted on the exterior driver's side of the vehicle and one will be mounted inside the cab, readily accessible to the driver. If explosives-laden vehicles are parked at an explosives location, additional fire extinguishers beyond those required in paragraph 10.23 are not required. If the vehicle leaves the

explosives location, additional extinguishers are required. Refer to AFJMAN 24-306, *Manual for the Wheeled Vehicle Driver*, and AFI 24-301, *Vehicle Operations,* for further guidance.

10.23.3. Ensure at least one fire extinguisher is available for each item of powered materiel-handling equipment used to handle AE.

10.23.3.1. Individual fire extinguishers are not required for each piece of handling equipment during explosive operations if the requirements of paragraph 10.23 are met.

10.23.3.2. If handling equipment is used to transport AE to a location where a second fire extinguisher is not immediately available, two portable 2A:10BC rated extinguishers are required for the handling equipment.

10.23.4. Provide flightline fire extinguishers for aircraft according to munitions loading manuals, AFOSH Standard 91-501, and T.O. 00-25-172, *Ground Servicing of Aircraft and Static Grounding/Bonding.*

10.24. Storing Water for Firefighting. Adequate water to fight fires must be available. The capacity of the water supplies will be determined by the authority having jurisdiction (see paragraph 12.82).

10.24. (ACC)The ACC Command Fire Protection Engineer (HQ ACC/A7XF) has jurisdiction.

Table 10.1. Fire Division Hazards and Actions.

FIRE DIVISION	MATERIALS	HAZARD	ACTION/REMARKS
1	HD 1.1, HD 1.5, and Class IV liquid propellants	Mass explosion	1. Do not fight fire unless rescue attempt is planned. 2. If there is suitable separation to symbol 1 materials and fire chief approves, fire-fighting forces may attempt to extinguish the fire. 3. If personal safety is in doubt, take cover.
2	HD 1.2 and HD 1.6	Non-mass explosion, fragment producing	1. Give alarm; attempt to extinguish fire if in early stage. 2. Firefighting forces should fight fire. If not possible, prevent spread of fire. 3. Detonation of items could occur. Provide protection from fragments.
3	HD 1.3	Mass fire, no blast or fragment	1. May be fought if explosives not directly involved. 2. If WP munitions are involved, smoke is liberated. a. WP munitions may explode. b. Immerse Phosphorus in water or spray with water continuously. 3. For fires involving hexachlorethane (HC) and incendiaries use dry sand or dry powder in early stage. 4. For fires involving pyrotechnics and magnesium incendiaries. a. Protect adjacent facilities and equipment. b. Do not use carbon dioxide, Halon extinguishers or water on or near munitions. c. Allow magnesium to cool unless upon flammable material. In this case, use a 2-inch layer of dry sand or powder on the floor and rake the burning material onto this layer and re-smother.
4	HD 1.4	Moderate fire, no blast or fragment	1. Fight these fires. 2. Expect minor explosions and hot fragments.

Table 10.2. Compatibility Group and Chemical Hazard Symbols Required for Storage of Chemical Ammunition and Substances.

Chemical Agents and Munitions	CG[2]	Full Protective Clothing			Breathing Apparatus	Apply No Water
		Set 1	Set 2	Set 3		
Toxic Agents[1]	K	X				
Tear Gas, O-Chlorobenzol	G		X			
Smoke, Titanium Tetrachloride	G		X			
Smoke, Sulphur trioxide-chlorosulphonic acid solution	G		X			
Smoke, Aluminum-zinc oxide-hexachloroethane	G				X	X
White Phosphorous	H			X		
White Phosphorous plasticized	H			X		
Thermite or Thermate	G				X	X
Pyrotechnic Material	G				X	X
Calcium Phosphide	L				X	X
Signaling Smokes	G				X	
Isobutyl methacrylate with oil	J				X	
Napalm (NP)	J			X		X
Triethylaluminim	L			X		X

Notes:

1. Toxic Agents without explosives components that normally would be assigned to HD 6.1 may be stored as compatibility group K.
2. See Chapter 3 for information pertaining to CG.

Table 10.3. Fire Withdrawal Distances for Non-essential Personnel. 1

HD	UNKNOWN QUANTITY (ft)	KNOWN QUANTITY (ft)
Unknown, located in facility, truck, and or tractor trailer	4,000	4,000
Unknown, located in railcar	5,000	5,000
1.1[2] and 1.5	Same as unknown facility, truck, trailer, or railcar as appropriate	**For Transportation:** NEWQD $\leq$ 500 lb D = 2,500 ft
		NEWQD > 500 lb D = 5,000 ft for railcars D = 4,000 ft for other modes
		For bombs and projectiles with caliber 5-in or greater D = 4,000 ft
		For Facilities: NEWQD $\leq$ 15,000 lb D = 2,500 ft
		15,000 lbs < NEWQD $\leq$ 55,285 lbs D = 4,000 ft
		NEWQD > 55,285 lbs $D = 105W^{1/3}$
1.2[2] and 1.6	2,500	2,500
1.3	600	Twice IBD with a 600 ft minimum (T12.12)
1.4	300	300

NOTES:

1. Emergency withdrawal distances do not consider potential flight range of propulsion units.
2. For HD 1.1 and HD 1.2 AE, if known, the maximum range fragments and debris will be thrown (including the interaction effects of stacks of items, but excluding lugs, strongbacks, and or nose and tail plates) may be used to replace the distances given.

Figure 10.1. Fire Division Symbols.

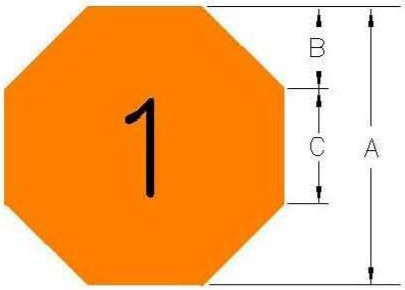

Fire Division 1 or 5

24-inch: NSN 7690-01-082-0290
12-inch: NSN 7690-01-081-9581

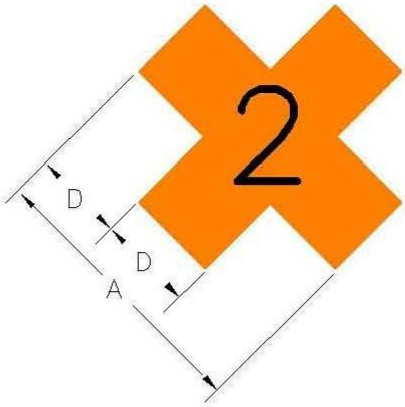

Fire Division 2 or 6

24-inch: NSN 7690-01-082-0289
12-inch: NSN 7690-01-087-7340

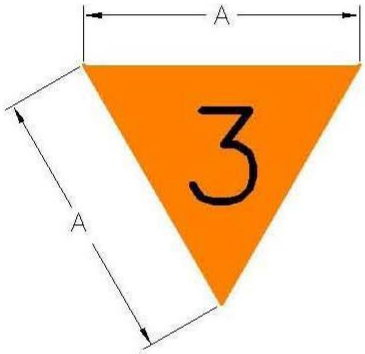

Fire Division 3

24-inch: NSN 7690-01-081-9583
12-inch: NSN 7690-01-081-9582

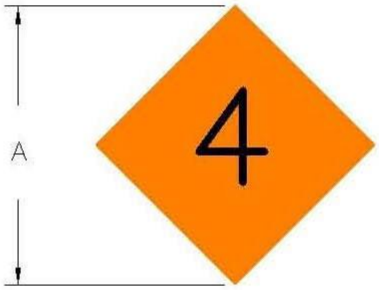

Fire Division 4

24-inch: NSN 7690-01-082-6709
12-inch: NSN 7690-01-081-9584

Dimensions	Large Symbol		Small Symbol	
	inches	metric (mm)	inches	metric (mm)
A	24	610	12	305
B	7	178	3.5	89
C	10	254	5	127
D	8	203	4	102
Letters (height)	10	254	5	127
Letters (thickness)	2	51	1	25

Colors (per Federal Standard 595B or GSA Catalog)
Background: Orange #12246
Letters: Black # 17038

Figure 10.2. Chemical Hazard Symbols.

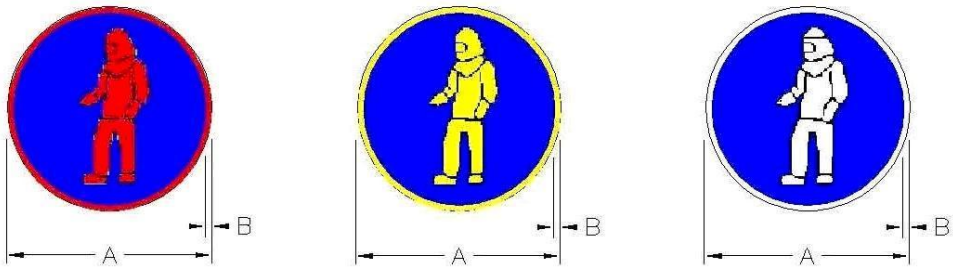

Symbol 1. Wear full protective clothing.

Background is blue, and figure and rim are as follows:

Red for Set 1 Protective Clothing:
24-inch: NSN 7690-01-081-9586
12-inch: NSN 7690-01-081-9585

Yellow for Set 2 Protective Clothing:
24-inch: NSN 7690-01-081-9587
12-inch: NSN 7690-01-082-0291

White for Set 3 Protective Clothing:
24-inch: NSN 7690-01-083-6272
12-inch: NSN 7690-01-081-9588

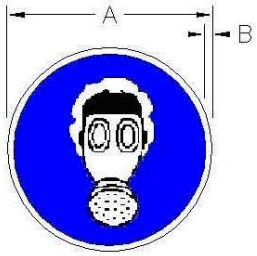

Symbol 2. Wear breathing apparatus.

Background is blue.
Figure and rim are white.
24-inch: NSN 7690-01-081-9589
12-inch: NSN 7690-01-082-6710

Symbol 3. Apply no water.

Background is white.
Circle and Diagonal are red.
Figures are in black.
24-inch: NSN 7690-01-082-2254
12-inch: NSN 7690-01-082-0292

Dimensions	Large Symbol		Small Symbol	
	inches	metric (mm)	inches	metric (mm)
A	24	6´0	12	305
B	.5	13	.25	6
C	2	51	1	25

Colors (per Federal Standard 595B or GSA Catalog)

Red #11105 White # 17875
Blue #15102 Black #17038
Yellow #13538

Figure 10.3. Supplemental Chemical Hazard Symbols.

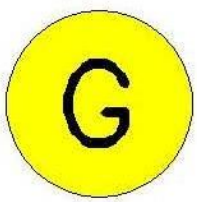

G–Type Nerve Agents

24–inch: NSN 7690–01–082–5418
12–inch: NSN 7690–01–081–7481

VX Nerve Agents

24–inch: NSN 7690–01–081–7483
12–inch: NSN 7690–01–081–7482

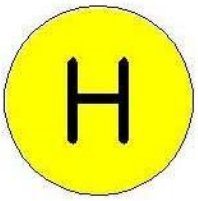

H–Type Mustard Agents

24–inch: NSN 7690–01–082–6713
12–inch: NSN 7690–01–083–1663

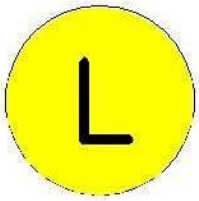

Lewisite

24–inch: NSN 7690–01–082–6715
12–inch: NSN 7690–01–082–6714

Colors (per Federal Standard 595B or GSA Catalog)
Background: Yellow #13538
Letters: Black # 17038, as follows:

(a) 12 inches [305 mm] high and 2 inches [51 mm] thick on a 24-inch [610 mm] diameter circle.

(b) 6 inches [152 mm] high and 1-inch [25 mm] thick on a 12-inch [305 mm] diameter circle.

Chapter 11

LICENSED EXPLOSIVES STORAGE LOCATIONS

Section 11A—Purpose and Limitations for Licensed Explosives Storage Locations

11.1. Purpose of Licensed Explosives Storage Locations. Storage of small amounts of AE is sometimes required in facilities or locations that are not explosives sited in accordance with Chapter 14. Such storage may be permitted in a licensed explosives storage location in accordance with the requirements of this chapter. Operations involving AE stored in explosives licensed locations and storage of AE not requiring licensing or explosives siting are also covered in this chapter.

11.1.1. Licenses do not apply to explosives operations other than those listed in this chapter.

11.1.2. Licenses are not to be used for convenience.

11.1.3. Licenses are issued by the host weapons safety office.

11.1.3. **(ACC)** IG personnel will request the host WSM approve and license a storage location for their exercise munitions prior to arrival if required.

11.1.4. Except as specified in this chapter, QD requirements do not apply to licensed explosives storage locations.

11.1.5. Local written instructions are required for each explosives license.

11.2. General Limitations on AE in Licensed Explosives Storage Locations.

11.2.1. Quantities of AE must be limited to minimum quantities necessary to support specific, mission essential, and explosives operations or missions.

11.2.2. CG A, K, and L will not be licensed. Compatibility requirements specified elsewhere in this Manual do not apply.

11.2.3. HD 1.2.1 and HD 1.2.3 will not be stored in a licensed explosives location, except as allowed per paragraph 11.15.

11.2.4. HD 1.1 will not be stored in a licensed explosives location, except as allowed per paragraphs 11.15 and 11.23.

11.3. NEWQD Limitations on AE in Licensed Explosives Storage Locations. The following quantities of AE, expressed as NEWQD, will not be exceeded on any one license.

11.3.1. Mission essential quantities of HD 1.4.

11.3.2. 100 lbs of HD 1.3.

11.3.3. 100 lbs of HD 1.2.2.

11.3.4. Deleted.

11.3.5. Turn in unserviceable explosive components or items to the base munitions storage area as quickly as possible to preclude build-up of unserviceable NEWQD. Unserviceable NEWQD must be counted against the total NEWQD of the licensed facility.

Section 11B—Requirements for Licensed Explosives Storage Locations

11.4. General Requirements for Licensed Explosives Storage Locations.

11.4.1. The structure or room used for storage must be capable of being locked to prevent pilferage and unauthorized handling. Contact Security Forces for resource protection requirements.

11.4.2. Post firefighting symbols in accordance with paragraph 10.7.

11.4.3. Provide dunnage for ventilation when required by civil engineering, logistics or bioenvironmental directives.

11.5. Separation Requirements for Licensed Explosives Storage Locations.

11.5.1. No separation requirements apply to HD 1.4 AE stored in licensed explosives storage locations.

11.5.2. A minimum separation of 25 ft is required from licensed explosives storage locations containing HD 1.3 AE to unrelated explosives operations, unrelated personnel, or other licensed explosives storage locations. Where 25 ft cannot be obtained, a 2-hour fire rated wall or 2-hour fire rated cabinet is required.

11.5.3. A minimum separation of 100 ft is required from licensed explosives storage locations containing HD 1.2.2 AE to unrelated explosives operations, unrelated personnel, or other licensed explosives storage locations. Where 100 ft cannot be maintained, a fragment barrier that provides protection equal to ¼-inch mild steel plate or one layer of sand bags is required. A substantial dividing wall (SDW) (see paragraph 6.28) is an acceptable fragment barrier.

11.5.3. **(ACC)** Ensure munitions are barricaded on all sides (top and bottom) as necessary.

11.5.4. A fragment barrier consisting of either a ¼-inch mild steel plate or one layer of sand bags is required when HD 1.2.2 is stored inside or IBD is not provided to other non-related facilities.

11.5.5. In accordance with the general explosives safety requirement to separate explosives storage and operations, the maximum separation possible shall be provided between a licensed explosives storage location and the operation and personnel it supports. The requirements of paragraphs 11.5.2 and 11.5.3 shall be complied with to the maximum extent possible.

11.5.6. Parking Areas.

11.5.6.1. POV, GOV and AGE parking areas will be located a minimum of 100 ft from a licensed location. This minimum distance of 100 ft may be reduced to 50 ft if the PES is of non-combustible construction, a barrier sufficient to prevent the vehicle from rolling within 50 ft of the PES is located between the POV parking spaces and the PES.

11.5.6.2. Temporary parking of GOVs or AGE, other than those being loaded or unloaded, will not be closer than 25 ft to any licensed location. Temporary means the length of time for which the presence of the vehicle is essential to completion of a single task (e.g., a single work order number).

11.5.6.3. Local fire and safety officials may reduce these parking requirements for each licensed location.

11.5.6.3. **(ACC)** Evaluate each facility individually for parking reductions.

Section 11C—Documentation for Licensed Explosives Storage Locations

11.6. AF Form 2047. Use AF Form 2047, *Explosive Facility License*, to document approval for licensed explosives storage locations. This form is shown in Figure 11.1. The AF Form 2047 must be displayed at the licensed explosives storage location.

11.7. Instructions for Completing AF Form 2047.

11.7.1. **Item 1.** Enter name of base.

11.7.2. **Item 2.** Enter name of requesting organization.

11.7.3. **Item 3.** Enter license number. The installation weapons safety manager will assign a number that will consist of the last two digits of the calendar year and a serial number, assigned in numerical sequence. (For example, the first license issued in 2003 would be numbered 03-1, the second would be 03-2.)

11.7.4. **Section I:**

11.7.4.1. Item 4. Enter building number as shown on TAB C-1 of the base comprehensive plan. For an unnumbered facility, insert narrative description such as outdoor storage (in-transit).

11.7.4.2. **Item 5.** Enter description of the primary use of the facility (e.g., alert hangar, small arms range, egress shop, security and administrative building, rod and gun club, life support shop).

11.7.4.3. **Item 6.** Enter identifying number of applicable written operating instructions.

11.7.4.4. **Item 7.** If applicable, enter room number of the facility where explosives will be stored.

11.7.4.5. **Item 8.** If applicable, describe the room's purpose.

11.7.4.6. **Item 9.** Enter brief description of facility construction (e.g., concrete-masonry, wood frame).

11.7.5. **.** Enter the following information for each AE item (Section II is continued on the back side of the form if more room is required):

11.7.5.1. **Column A.** HD.

11.7.5.2. **Column B.** CG.

11.7.5.3. **Column C.** Enter stocklist nomenclature and national stock number (NSN), or federal supply class and Department of Defense Identification Code (DODIC).

11.7.5.4. **Column D.** Enter number of items authorized (both serviceable and unserviceable).

11.7.5.5. **Column E.** Enter total NEWQD based on number of items authorized. This column does not apply to HD 1.4 items.

11.7.5.6. **Column F.** Enter appropriate firefighting and chemical symbols.

11.7.6. **.** The commander of organization or the functional manager requesting the license will be the certifying official.

11.7.7. **.** The individual who is assigned installation weapons safety responsibilities signs as the responsible official after:

11.7.7.1. Validating the quantity of AE to be kept.

11.7.7.2. Ensuring only the smallest quantity of AE needed to support mission requirements is authorized.

11.7.7.2. **(ACC)** Maintain justification letters at the licensed location showing how mission essential quantities were determined.

11.7.7.3. Physically inspecting the facility to ensure firefighting symbols are available for posting in accordance with paragraph 10.7.

11.7.7.4. Ensuring copies of applicable T.O. or other procedures are available at the facility.

11.7.7.5. Obtaining the coordination required in Section V.

11.7.7.6. Ensuring the installation Fire Protection Agency has completed the remarks section per paragraph 11.7.8.1.

11.7.8. **Remarks.**

11.7.8.1. The installation Fire Protection Agency will enter the specific type, quantity, and physical placement of fire extinguishers for the location, as well as any additional fire prevention practices.

11.7.8.2. If applicable, enter conditions of approval, expiration date (if other than indefinite), reasons pertaining to disapproval, comments of requesting organization, and T.O. or other procedural references.

11.7.9. **.** Enter office symbols, dates, and names of coordinators.

11.7.9.1. Coordinate through responsible Munitions Accountable System Officer, the local Security Forces Resource Protection office and the installation Fire Protection Agency prior to being approved by the installation Weapons Safety Office.

11.7.9.2. Prior to coordination, the Security Forces Resource Protection office must physically inspect the facility to ensure the requirements of paragraph 11.4.1 have been met.

11.7.9.3. For licenses involving privately-owned ammunition outside the United States and Guam, obtain the installation's judge advocate coordination to ensure no host nation laws are being violated.

11.8. Maintaining the AF Form 2047.

11.8.1. Update the AF Form 2047 each time the HD, NEWQD, CG, or quantity of AE items changes.

11.8.1. **(ACC)** Updated explosives facility licenses require coordination IAW AFMAN 91-201 para 11.7.9.1.

11.8.2. When Munitions Operations (AFK) issues suitable substitutions for stock listed items, updating the AF Form 2047 is not required as long as the HD, NEWQD, CG, and quantity of AE items does not change. Place an asterisk (*) next to the stock number listed in column "C" of the AF Form 2047 that is posted at the location and enter in the "Remarks" block, "*Suitable substitute issued."

11.8.3. Review the AF Form 2047 annually for continued requirement and applicability.

11.8.3. **(ACC)** Maintain documentation of annual review in the weapons safety office.

11.8.4. Cancel the AF Form 2047 when the requirement no longer exists.

Section 11D—Operations Involving AE Stored in Licensed Explosives Storage Locations

11.9. Operations Involving AE Stored Licensed Explosives Storage Locations.

11.9.1. The unit or squadron commander (or equivalent) approves locally-written instructions (see Section 7B) as the authorization for operations involving AE stored in a licensed explosives storage location. These instructions must be available for the operation.

11.9.2. An ESP is not required for these operations as a PES.

11.9.3. These operations must be sited as an ES if located within the IBD of a PES.

11.9.4. Separation distances for these operations must meet the minimum distances specified in paragraph 11.5.

Section 11E—Requirements for Specific Licensed Explosives Storage Locations

11.10. Mobility Storage. AE designated for mobility shall be stored within the base munitions storage area until ready for shipment, unless the deploying unit has an extremely short timeline requirement that makes it impossible to store within the MSA. License the storage of pre-positioned mobility AE only if a properly sited area is not available. The license is valid only for the duration of the mobility tasking. At host units without a designated munitions storage area, explosive items designated for mobility may be stored in a consolidated licensed location providing adherence to all Chapter 11 provisions.

11.11. Training and Exercises. Licensing AE locations used solely for exercises, such as the ground burst simulators, smoke grenade storage, etc., is permitted. This license is valid only for the duration of the exercise.

11.12. Control Tower. If required, license the storage of necessary quantities of HD 1.3 pyrotechnics needed to conduct emergency operations at fixed and mobile control towers. Do not load pyrotechnic projectors and pistols unless the operational situation demands a state of immediate readiness. The same safety and security requirements that apply to firearms apply to projectors and pistols. Place in a proper rack, locker, box or compartment to prevent damage, unauthorized handling, theft or accidental discharge.

11.13. Aircrew Flight Equipment.

11.13.1. A license is not required for assembled parachutes, aircrew flight equipment kits, life rafts and life preservers containing authorized explosives when kept in personnel equipment rooms, life rafts, and aircrew flight equipment shops.

11.13.2. A license is required for those areas in which aircrew flight equipment explosive components are stored.

11.13.3. An operating instruction, approved by the commander (see Section 7B), is required for all aircrew flight equipment shop operations involving explosive components.

11.14. Riot Control Items. If required, store riot control and smoke grenades (except WP grenades) with small arms ammunition in arms rooms and other such locations. However, if the arms room is collocated with a facility where personnel are under physical restraint or confinement, the National Fire Codes, Standard 101, *Life Safety Code*, applies. Don't store 40-millimeter grenades, pyrotechnics, tear gas or chemical irritants in the room regardless of the QD division or compatibility, unless the arms room has protective features which completely protect detainees from the effects of accidental explosives activation. Protective features include fragment barriers, blast doors, and exhaust fans. Qualified engineers must evaluate capabilities of protective features. Limit the quantity to the smallest amount needed to support approved contingency plans.

11.15. Egress Systems Maintenance Shops. When necessary, units may license a limited quantity of in-use egress explosive components of any hazard division (including HD 1.1) in the egress shop after removal from aircraft undergoing maintenance. Don't exceed the total number of complete sets for the number of aircraft in maintenance. The following special provisions apply:

11.15.1. Ejection seats, canopies, and explosives components not undergoing actual maintenance, will be stored in a separate location outside the maintenance area. Ejection seats may only be stored in the maintenance area while maintenance is being conducted on other seats if all explosive components have been removed from the seats to be stored and placed in a separate storage location.

11.15.2. Within the egress maintenance work area, the NEWQD limitations in paragraph 11.3 apply to the number of seats and spare components undergoing maintenance at any one time.

11.16. Gun Systems and Maintenance Shops. When possible, remove ammunition from guns and gun systems before they are brought into a weapons maintenance facility for repair. Gun systems using drums don’t require removal of ammunition if the feed system is mechanically safed to prevent ammunition from feeding into the gun. QD requirements do not apply to gun system maintenance operations when explosives are limited to HD 1.4 and 100 pounds of HD 1.2.2 provided the using organizations ensure:

11.16.1. MAJCOMs will establish procedures for clearing jammed guns. Consider both active and contingency bases.

11.16.1. **(ACC)** Refer to AFI 21-101 CAF Supplement, *Aircraft and Equipment Maintenance Management*.

11.16.2. Guns or gun systems loaded with ammunition will not be brought into the maintenance facility until needed to meet the work schedule and are removed immediately after repair.

11.16.3. Precautions are established to prevent inadvertent firing.

11.16.4. Gun systems with live ammunition are grounded.

11.16.5. Gun system is pointed in the least hazardous direction.

11.16.6. Downloaded ammunition is removed from the building and returned to the base munitions storage area as soon as possible.

11.16.7. Compliance with general explosives safety standards.

11.17. Incendiary Equipment and Document Destroyers. If necessary, store these items near the planned point of use to comply with emergency destruction plans. Establish quantities for each location by coordinating with base explosives safety representatives and your security representatives. The 100-pound HD 1.3 limit does not apply in this case. Limit quantity to the amount needed for emergency destruction plans. Training quantities are not authorized. Construct or protect storage rooms with noncombustible or fire-resistive material. If possible store in nearby small low-cost structures (sheds, conex, etc.). Ensure adequate ventilation is provided. Maintain 50-foot firebreaks or vegetation control zones and locate at least 75 feet from any other building. Store replacement stocks in the base explosives storage area. Only trained personnel are allowed to prepare and activate these devices.

11.18. Rod and Gun Clubs. License the explosives storage locations for clubs that hand-load ammunition on Air Force property. For skeet and trap ranges adhere to criteria established by the National Skeet Shooting Association. See also paragraphs 11.19 and 11.20. Designate a qualified member to identify and enforce criteria.

11.19. Retail Stores. Where only retail sales are made, paragraph 11.25 applies. Don't complete a license unless the store sells primers and smokeless powder. More than 100 lbs of propellant and 25,000 primers, packed in their shipping containers, may be licensed if they are segregated in such a way that the MCE does not exceed 100 lbs of propellant and 25,000 primers, i.e., if IM separation is met. Don't place HD 1.3 propellant in other containers if it would result in extreme confinement in the event of ignition. Use fire symbol 3 to designate the presence of both the propellant and primers. Keep the symbol posted during temporary periods when the propellant has been sold out, but primers are still in stock.

11.20. Hand Loading. Conduct hand-loading operations in a room or building used solely for this purpose. Don't store or reload ammunition in dormitories or bachelor officer quarters. Use retail store safety requirements as well as the following:

11.20.1. Develop and post an approved, locally-written procedure. Refer to AFI 31-101, *Integrated Defense*, for security.

11.20.2. Grant loading privileges to only authorized personnel trained in the use of hand-loading equipment, safety provisions, and hazards involved. Wear safety goggles or face shields during all loading operations.

11.20.3. Strictly supervise members in training. Keep a log showing names of certifying instructors and each person who has satisfactorily completed the training.

11.20.4. Do not permit smoking, matches or flame-producing devices in any loading or storage location.

11.20.5. Place a ground bar with a resistance of 25 Ohms or less at each entrance to the hand-loading room.

11.20.6. Post a sign requiring each person to touch the ground bar before entering the room.

11.20.7. Maintain and inspect the ground bar as outlined in Chapter 5.

11.20.8. Post explosives and personnel limits. Allow no more than 10 lbs of propellants, 10,000 primers, and 5,000 assembled rounds in the hand loading room at one time. These quantities are considered as part of the overall limits for the building.

11.20.9. Provide storage lockers for propellant and transfer to the loading point only quantities required to sustain a continuous operation.

11.20.10. Remove only one packing tray at a time from primer storage.

11.20.11. Repack unused components in their original containers and return them to the storage locker at the end of each loading operation.

11.20.12. Lock unused lockers.

11.20.13. Cover tables used for hand loading with a seamless, nonporous, non-sparking conductive material.

11.20.14. Permanently attach and bond hand-loading equipment to a 25 Ohm or less grounded tabletop.

11.20.15. Test the grounding system twice a year and when broken connectors are repaired.

11.20.16. Document grounding system test results.

11.20.17. Visually inspect ground conductors before each day's operation.

11.20.18. Keep floors and walls free of cracks that could accumulate explosive dust and foreign materials. Observe good housekeeping practices at all times.

11.20.19. In case of a spill, stop all operations until the propellant is cleaned up.

11.20.20. Put all salvaged propellant in a metal container that contains water and is marked "Scrap Explosives."

11.20.21. Put all damaged components or complete rounds in separate, properly-marked containers.

11.20.22. Separate unserviceable items from serviceable stocks.

11.20.23. Qualified personnel must dispose of unserviceable propellants, damaged rounds or components, and empty explosives containers as directed in T.O. 11A-1-42, *General Instructions for Disposal of Conventional Munitions*, and T.O. 11A-1-60, *Inspection of Reusable Munitions Containers and Scrap Material*.

11.20.24. Use only commercial-type loading tools, dies, scales, powder measures, and so forth for hand-loading operations.

11.20.25. Place personnel protection shields between each piece of permanently-attached hand-loading equipment. Shields must be large enough to protect adjacent personnel. Shields can be made of plywood, Plexiglas or similar materials.

11.20.26. Do bullet molding outside the hand-loading room.

11.21. Force Support Squadron Activities (formerly MWR Activities). Force Support Squadron activities such as aero clubs and boating activities are sometimes required to maintain and store commercial pyrotechnic signals. Control and store these items using the same criteria as the military item which they resemble. Ensure personnel are properly trained. License the storage locations. Technical data or manufacturer's data are sources for locally-written procedures.

11.22. Minuteman Handling Team Facility. The transporter erector (TE) tractor or autocar with missile in tow may require temporary storage in the Minuteman Handling Team (MHT) facility. When using this procedure, comply with the following conditions:

11.22.1. Storage is essential to meet operating requirements.

11.22.2. Vehicle is chocked and grounded.

11.22.3. Vehicle safety inspection is performed and no safety deficiencies exist.

11.23. Research and Development Laboratories for Specific Experiments. When necessary, units may license a limited quantity, not to exceed 200 grams in each licensed location, of HD 1.1 material for research use in laboratories. Licensing explosives used solely for a research project is allowed only for the length of the project. Commander-approved, locally-written procedures are required for the explosives operation.

11.24. Base Defense Support Munitions for Dispersed Locations. When required for defense against hostile forces, pre-position base defense explosives stocks in licensed temporary magazines. Store and protect licensed facilities and stocks as stated below:

11.24.1. If necessary, omit fire and hazard symbols to avoid attention of hostile forces. Post "No Smoking" signs and keep the fire department informed of each facility's location and type of explosives.

11.24.2. Follow the instructions in paragraphs 11.4 and 11.5 if the facility is stocked with HD 1.2, 1.3, 1.4, and riot control items.

11.24.3. Explosives site plans must be submitted for HD 1.1 items.

Section 11F—Items or Situations not Requiring a License

11.25. Items or Situations not Requiring a License. Licenses are not required for the storage of small arms ammunition (.50 caliber or less), commercial maritime distress signals and like items held by base exchanges and individuals in family housing. However, if the Base Exchange stores primers and smokeless powder, complete a license and apply the limitations of paragraph 11.19. This exception also applies to locations storing less than 1,000 rounds of HD 1.4 small arms ammunition or cartridges for cartridge-actuated tools (up to 5,000 feet of shock tube) and to locations storing thermal batteries. However, this exception for quantities less than 1,000 rounds of HD 1.4 does not apply to the on-base storage of bird scare ammunition, privately-owned ammunition belonging to dormitory and billeting residents, or approved commercial off-the-shelf

explosives, except as noted in this Manual. This ammunition will always be stored in approved, licensed explosives storage locations, regardless of quantity. Additionally, F/A-22 assembled pylons in storage do not require a license. See also paragraph 11.13.

Figure 11.1. AF Form 2047, *Explosives Facility License.*

EXPLOSIVES FACILITY LICENSE

1. BASE	2. ORGANIZATION *(Include initials of Parent Command in parenthesis, if in Tenant)*	3. LICENSE NO.
Anywhere, AFB	00 SFS/SFA	09 - 01

I. FACILITY DATA

4. FACILITY IDENTIFICATION
Bldg. 2047, SFS Squadron

5. PRIMARY USE	6. WRITTEN OI'S APPLICABLE
Security Forces Armory	00 FWI 91-201

7. ROOM NO.	8. ROOM USE	**9. CONSTRUCTION**
247	SFS Armory	Concrete-Masonry

II. EXPLOSIVE LIMITS REQUESTED
(If more space is needed, use second page)

CLASS/ DIVISION A	COMPATIBILITY GROUP(S) B	NOMENCLATURE C	QNTY D	EXPLOSIVE WEIGHT E	FIRE SYMBOL F
1.4	G	Ctg, 40mm, Green Smoke, M679: 1310-00-179-1159	25	N/A	4
1.4	S	Ctg, 12 Gage Shotgun: * 1305-00-147-5568	300	N/A	4
1.4	S	Ctg, .38 Cal Wadcutter: 1305-00-123-0548	3000	N/A	4
1.4	S	Ctg. 5.56mm Ball, M193 GR: 1305-00-057-1876	5000	N/A	4
1.4	G	Grenade, Hand, Riot M7/M7A1: 1330-00-219-8577	25	N/A	4(B)
1.3	G	Grenade, Rifle Illum, M27: 1330-00-028-5906	80	40 lbs	3(DE)
1.2.2	G	Ground Burst Simulator, M115A2: 1370-00-752-8126	50	5.1 lbs	2(E)
		----------Last Entry----------			

III. CERTIFICATION

I CERTIFY the above described facility is required in support of the mission of the above organization.

DATE	TYPED NAME, GRADE AND TITLE OF CERTIFYING OFFICIAL	SIGNATURE
7 Dec 09	Jed I. Knight, Capt, USAF Commander	*Jed I. Knight*

IV. ACTION OF RESPONSIBLE OFFICIAL

DATE	TYPED NAME, GRADE AND TITLE OF APPROVING OFFICIAL	SIGNATURE
10 Dec 09	Amanda B. Reckonedwith, MSgt, USAF Wing Weapons Safety Manager	*Amanda B. Reckonedwith*

REMARKS
Fire extinguisher requirements: Minimum of 2ea 2A10BC. One located near entrance to room and the other on the west wall near locker but no closer than 6 ft.

Changes to fire/chemical symbols must be coordinated with the ECC.

Vehicle parking (POV/GOV/AGE) is allowed in designated parking areas surrounding Bldg 2047 according to AFMAN 91-201, paragraph 11.5.6.

Chemical Symbol B: Full protective clothing set 2 (yellow man)
Chemical Symbol D: Breathing apparatus
Chemical Symbol E: Apply no water
* Suitable substitute issued

V. COORDINATION

00 CES/FPA	00 SFS/RPO	00 MUNS/MASO		
JFK 8 Dec 09	LBJ 8 Dec 09	FDR 8 Dec 09		

AF IMT 2047, 19980704, V1 **PREVIOUS EDITION IS OBSOLETE**

Chapter 12

QUANTITY-DISTANCE CRITERIA

Section 12A—Introduction

12.1. Introduction. The term "Quantity-Distance" (QD) refers to protection requirements from potential explosion sites (PES) to different kinds of exposed sites (ES). The QD standards were developed over many years and are based on explosives mishaps, tests and analyses. QD separations are based on an acceptable level of damage between a PES and an ES.

12.1.1. The damage or injury potential of explosions is normally determined by the separation distance between the PES and ES; the ability of the PES to suppress blast overpressure, primary and secondary fragments; and the ability of the ES to resist explosion effects. This chapter:

12.1.1.1. Defines permissible exposures for both accidental and intentional detonations.

12.1.1.2. Sets minimum standards for separation distances between PES and ES by taking into account anticipated explosion effects, suppression, and resistance.

12.1.1.3. Establishes explosives safety siting criteria (QD relationships) for PES and ES, based on blast, fragment, firebrand, thermal, and groundshock effects. QD is determined by the effect requiring the greatest distance.

12.1.2. When an appropriate degree of protection can be provided either by hardening an ES or construction of a PES to suppress explosion effects, these factors may be taken into account and the distance required by the standard QD tables may be reduced. Submit construction designs with rationale or test results with the explosives site plan (ESP). See Chapter 6.

12.1.3. QD separation does not apply to AE in the transportation mode (reference Chapter 8).

Section 12B—Quantity-Distance Principles

12.2. General. The bases for determining required separation distances (QD) are:

12.2.1. The construction and type of PES.

12.2.2. The HD types and NEWQD of AE present in the PES.

12.2.3. The construction and type of ES.

12.2.4. The distance separating the PES from the ES.

12.2.5. In some instances, the orientation of the PES and the ES.

12.3. Types of Separations.

12.3.1. **Inhabited Building Distance (IBD).** This is the minimum distance required to protect facilities and personnel not directly related to explosives storage and operations. At

this distance, some damage and personnel injury may still be expected (see Chapter 2 for reaction effects).

12.3.2. **Public Traffic Route Distance (PTRD).** This is the minimum distance required to protect public traffic routes (see paragraph 12.16.3 for on-base roads) and other designated exposures. At this distance, damage and personnel injury is expected (see Chapter 2 for reaction effects). For HD 1.1 and 1.2, PTRD is normally 60% of IBD. For HD 1.3 and 1.4, PTRD is the same as IBD. Public traffic routes are classified as high, medium, and low traffic density. The traffic density will be averaged over a normal (non-holiday) week in terms of number of passengers during a 24-hour period. (Note: In applying criteria other than the default values given below (which are based on car (and rail) speed of 50 mph, and a ship speed of 10 mph), considerations such as the following will be taken into account to establish exposure levels: speed of vehicles, number of passengers per vehicle, protection afforded by the vehicle, variation in daily traffic levels in relation to AE activities, and seasonal traffic trends. The default value of two passengers per car may be used to estimate traffic density.)

12.3.2.1. **High Traffic Density.** Routes which have 10,000 or more car or rail passengers per day, or 2,000 or more ship passengers per day. IBD separation is required for high traffic density routes per paragraph 12.15.1.19.

12.3.2.2. **Medium Traffic Density.** Routes which have at least 400 but less than 10,000 car or rail passengers per day, or at least 80 but less than 2,000 ship passengers per day. As a minimum, medium traffic density route criteria apply to any recreational activity that is extensive and occurs on a regular basis. PTRD separation is required for medium traffic density routes per paragraph 12.16.1.

12.3.2.3. **Low Traffic Density.** Routes which have fewer than 400 car or rail passengers per day, or fewer than 80 ship passengers per day. PTRD separation (based on blast criteria only) is required for low traffic density routes per paragraph 12.16.2.

12.3.3. **Intraline Distance (ILD).** This is the minimum distance required to protect activities associated with explosives storage and operations. Applying ILD recognizes the operational need for some people to be in the proximity of explosives while at the same time preserving some mission capability in the event of an explosives accident. Unhardened facilities at this distance will be extensively damaged and occupants may be severely injured (see Chapter 2 for reaction effects). In addition to the minimal protection to related activities, ILD should prevent propagation between two explosives locations. At ILD, no propagation from the blast overpressure is expected, and the probability of propagation from low angle, high velocity fragments is significantly reduced. For HD 1.1 and 1.2, ILD is normally 36% of IBD.

12.3.4. **Intermagazine Distance (IMD).** This is the minimum distance between PESs to prevent one PES from simultaneously detonating an adjacent PES. Maintaining IMD is no guarantee that propagation from one PES to another will not occur, only that they will not simultaneously detonate. At this distance, severe structural damage approaching total destruction is expected for conventional structures, and severe personnel injury or death is expected (see Chapter 2 for reaction effects). Earth Covered Magazines (ECM) provide significant protection at IMD; maintaining IMD between ECMs will provide virtually complete protection of AE against the propagation effects of an explosion. However, AE in

adjacent ECMs may be damaged (see paragraph 2.1.5.3). When less than required IMD exists between any two or more PESs, the quantities of explosives in these locations must be added to form a single PES encompassing the area and NEWQDs of the PESs which do not meet IMD. For this reason, any separation between explosives locations less than IMD may not be waived.

Section 12C—Determining Net Explosive Weight for Quantity-Distance

12.4. Determining NEWQD of AE Items. See paragraph 3.6 for guidance on determining the NEWQD of AE items. The explosive weight of Not-Regulated AE and AE assigned to Classes 2 through 9 is not considered for QD purposes (see paragraph 3.5).

12.5. Determining NEWQD of a PES. Generally, the combined NEWQD of all AE in a PES is used as the NEWQD of the PES for explosives siting. Determine NEWQD of a PES as follows:

12.5.1. If only one HD is present, combine the NEWQD of each AE item involved.

12.5.2. If multiple HDs are authorized, but only one HD is present at a time, determine the NEWQD separately for each HD (as described in paragraph 12.5.1).

12.5.3. If more than one HD is present at the same time, determine the NEWQD per paragraph 12.7.

12.5.4. See Section 12N for determining NEWQD for energetic liquids.

12.5.5. Where explosives are located in a common facility or location and are further subdivided into cells or stacks by IMD or equivalent protection (such as for buffered storage or multicubicals), the cell or stack with the greatest NEWQD may be used for explosives siting if specifically allowed by this Manual or approved by AFSC/SEW. Where IMD or equivalent protection is not provided, use the total NEWQD of all explosives.

12.5.6. For HD 1.2.1, the MCE as outlined in paragraph 3.16.4. will also be used as the basis for determining applicable QD.

12.5.7. For HD 1.2.3, the LSRN as outlined in paragraph 14.23.6. will also be used as the basis for determining applicable QD.

12.5.8. The NEWQD of a host nation PES that may be hazarding Air Force facilities and personnel will be based on the maximum NEWQD the host nation indicates will ever be present at that PES location. If the NEWQD cannot be obtained from the host nation, the responsible safety staff must estimate the type and quantity of explosives. Base estimates on knowledge of the host nation's military mission and type of facility involved (such as ECM, aircraft shelter, or maintenance facility). As a general rule, use the maximum NEWQD that would be allowed in a similar Air Force facility per paragraph 12.6.

12.5.9. When an AE conveyance (e.g., railroad car or motor vehicle), containing AE is not separated from a PES in such a manner as to prevent mass detonation, then the conveyance and PES will be considered as a unit and their NEWQD will be summed. This does not apply to temporary staging for the purpose of loading/unloading.

12.5.10. The NEWQD of the HD requiring the greatest separation establishes the QD for the facility when it is used for multiple operations.

12.6. Maximum NEWQD. Regardless of actual separations, maximum NEWQD limitations for HD 1.1 and 1.2 are as follows:

12.6.1. ECMs (except as noted in paragraph 12.6.2) and AGMs: 500,000 lbs.

12.6.2. 7-Bar Navy Box Type: 500,000 lbs except as noted in DDESB TP 15.

12.6.3. Non-standard ECMs: 250,000 lbs. Note: Sitings of non-standard ECMs sited prior to February 1999 for explosives weights not exceeding 250,000 lbs remain valid. Future sitings, including those where these ECMs are exposed sites, must comply with this Manual.

12.6.4. Barricaded modules at K1.1: 250,000 lbs.

12.6.5. Hardened Aircraft Shelters (HASs): See para 12.51.5.

12.6.6. Some facilities may have additional limits in order to use reduced QD criteria.

12.7. Determining NEWQD for Mixed HD.

12.7.1. **General.**

12.7.1.1. The presence of HD 1.4 does not affect the NEWQD of mixed HD. However, for QD determinations, HD 1.4 criteria will be considered.

12.7.1.2. When HD 1.1 is mixed with any other HD, treat the mixture as HD 1.1 except as noted in paragraph 12.7.2.

12.7.1.3. HD 1.5 is always treated as HD 1.1.

12.7.1.4. When dissimilar HD 1.6 are mixed and have not been tested to ensure non-propagation, the mixed HD 1.6 AE will be individually considered to be HD 1.2.1 or HD 1.2.2, based on their individual NEWQD or over-riding fragmentation characteristics.

12.7.2. HD 1.1 with HD 1.2. Use whichever of the following generates the largest QD:

12.7.2.1. Sum the NEWQD for HD 1.1 and NEWQD for HD 1.2 and treat the mixture as HD 1.1.

12.7.2.2. The NEWQD of the mixture is the NEWQD of the HD 1.2 sub-division requiring the largest QD.

12.7.3. HD 1.1 with HD 1.3. Sum the NEWQD for HD 1.1 and the NEWQD for HD 1.3 and treat the mixture as HD 1.1. AFSC/SEW may grant exceptions to this guidance when analyses or test results demonstrate that the HD 1.1 (for liquid propellants) will not cause detonation of the HD 1.3.

12.7.4. HD 1.1 with HD 1.6. Sum the NEWQD for HD 1.1 and the NEWQD for HD 1.6 and treat the mixture as HD 1.1.

12.7.5. HD 1.2.1 with HD 1.2.2. The NEWQD for the mixture is the NEWQD of the sub-division requiring the largest QD.

12.7.6. HD 1.2.1 with HD 1.2.3. The NEWQD for the mixture is the NEWQD of the sub-division requiring the largest QD.

12.7.7. HD 1.2.2 with HD 1.2.3. The NEWQD for the mixture is the NEWQD of the sub-division requiring the largest QD.

12.7.8. HD 1.2.1 with HD 1.2.2 with HD 1.2.3. The NEWQD for the mixture is the NEWQD of the sub-division requiring the largest QD.

12.7.9. HD 1.2 with HD 1.3. The NEWQD for the mixture is the NEWQD of the HD requiring the largest QD.

12.7.10. HD 1.2 with HD 1.6. Treat the HD 1.6 as HD 1.2.3 and determine NEWQD in accordance with paragraphs 12.7.6 to 12.7.8, mixing rules for 1.2.3, as applicable.

12.7.11. HD 1.3 with HD 1.6. Sum the NEWQD for the HD 1.6 and the NEWQD for the HD 1.3 and treat the mixture as HD 1.3.

Section 12D—Determining Distances Between PESs and ESs

12.8. General. Separation distances are measured along straight lines. For large intervening topographical features such as hills, measure over or around the feature, whichever is the shorter.

12.9. Measuring from a PES. Measure *from* a PES, to an ES, as follows:

12.9.1. The outside of the nearest exterior wall of the PES.

12.9.2. The outside of the nearest wall of the structure or room, within the PES, containing explosives.

12.9.3. The outside of the nearest wall of the compartment containing the greatest quantity distance hazard, when the PES is subdivided so that mass detonation between compartments will not occur.

12.9.4. The stack face of an open storage PES, such as modules and revetments.

12.9.5. The explosives carried externally on an aircraft which is parked either in the open or inside an approved lightweight shelter.

12.9.6. The explosives on an AE conveyance (e.g. railroad car or motor vehicle) located in the open, and separated from other PESs in such a manner as to prevent mass detonation.

12.9.7. The nearest edge of an AE conveyance (e.g. railroad car or motor vehicle) located in the open, and not separated from other PESs in such a manner as to prevent mass detonation.

12.9.8. The nearest external wall of the shelter or stall containing explosives or explosives-loaded aircraft, in a hardened aircraft shelters (HAS).

12.9.9. The center of large missile silos, launchers or launch pads.

12.9.10. The edge of a facility pad if it will be used to hold munitions.

12.9.11. The nearest edge of the aircraft cargo hold for internally-loaded explosives.

12.10. Measuring to an ES. Measure *to* an ES, from a PES, as follows:

12.10.1. The nearest edge of a non-explosives location, building, or taxiway.

12.10.2. The outside of the nearest wall of the structure or room containing people, for an occupied ES.

12.10.3. The stack face of an open storage PES, acting as an ES.

12.10.4. The outside of the nearest wall of the structure or room containing explosives, for an ES requiring IMD.

12.10.5. The nearest edge of the tee or green or the centerline of the fairway, for a golf course.

12.10.6. The centerline of a runway.

12.10.7. The nearest edge of an open recreational area.

12.10.8. The nearest edge of the aircraft cargo hold for internally-loaded explosives.

12.10.9. The edge of the roadway or pavement, for an ES requiring PTRD.

12.10.10. The nearest point of an aircraft, if aircraft survivability is required.

12.10.11. The nearest AE (internal or external) on an aircraft, if only IMD or ILD protection is required.

Section 12E—Quantity-Distance Application

12.11. Quantity-Distance K-Factors. NEWQD is used to calculate QD separations for blast protection by means of the formula:

$$D = K \times NEWQD^{1/3}$$

Where: D = required distance (in feet)
K = protection factor depending on the degree of risk assumed or permitted
$NEWQD^{1/3}$ = cube root of the NEWQD (in pounds)

Distance requirements are sometimes expressed by the value of K, using the terminology K9, K11, K18, to mean K equals 9, K equals 11, K equals 18, etc. Tables 12.30 and 12.31 provide a listing of distances for various K-factors at various NEWQDs.

12.11.1. When performing QD calculations using formulae, resulting answers with a decimal value of 0.5 or more may be rounded up to the nearest whole number, and resulting answers with a decimal value of less than 0.5 may be rounded down to the nearest whole number. For example, if calculating the required distance:

$D = K(NEWQD)^{1/3} = 40(1500 \text{ lbs})^{1/3} = 457.89 \text{ ft} = 458 \text{ ft}$
$D = K(NEWQD)^{1/3} = 18(200 \text{ lbs})^{1/3} = 105.26 \text{ ft} = 105 \text{ ft}$

Or, if calculating the allowable NEWQD:
$NEWQD = (D/K)^3 = (1150 \text{ ft}/40)^3 = 23{,}763.67 \text{ lbs} = 23{,}764 \text{ lbs}$
$NEWQD = (D/K)^3 = (700 \text{ ft}/18)^3 = 58{,}813.44 \text{ lbs} = 58{,}813 \text{ lbs}$

12.12. Paired Relationships.

12.12.1. The quantity of explosives allowed in a PES is the most restrictive amount based on analyzing the nearest IM, IL, PTR, IB or other exposed site, subject to the NEWQD limitations in paragraph 12.6. Where there are two or more adjacent ESs, the quantity allowed at the PES is the smallest of the amounts permitted by considering each ES in turn.

12.12.2. The QD criteria for a PES-ES pair when both contain AE, are determined by considering each location, in turn, as a PES and an ES. The separation distance required for the pair is the greater of the two separation distances. An exception is permitted for service magazines supporting an AE operation; barricaded or unbarricaded (as appropriate) service magazine separation distances will be based on the NEWQD and the HD of the AE in the magazine and not that in the explosives operating location it supports.

12.13. QD Determination.

12.13.1. When all AE in the PES is HD 1.1, determine the QD using Table 12.1 and Section 12H.

12.13.2. When all AE in the PES is HD 1.2, determine the QD using Table 12.2 and Section 12I.

12.13.3. When all AE in the PES is HD 1.3, determine the QD using Table 12.3 and Section 12J.

12.13.4. When all AE in the PES is HD 1.4, determine the QD using Table 12.3 and Section 12K.

12.13.5. When all AE in the PES is HD 1.5, treat as HD 1.1 for siting purposes and comply with paragraph 12.13.1.

12.13.6. When all AE in the PES is HD 1.6, determine the QD using Table 12.3 and Section 12L.

12.13.7. When all AE in the PES is HD 6.1, determine the QD using Section 12M.

12.13.8. When all AE in the PES are energetic liquids, determine the QD using Section 12N.

12.13.9. When siting more than one type of AE, determine separately the QD criteria as required for each type of AE per paragraphs 12.13.1 through 12.13.9. Required QD separations will be based on the most restrictive QD determined.

12.13.10. TO 11N-20-7, Nuclear Safety Criteria, provides active materials storage standards for nuclear weapons and when more restrictive, those requirements override QD criteria in this Manual. Upon receipt of a Joint Test Assembly, organizations will use parent War Reserve weapon explosives criteria for storage and transportation while the assembly remains in Air Force custody.

12.13.11. If unable to verify QD criteria for a specific weapon system or a given situation, contact the appropriate MAJCOM for instructions. Such cases may include unusual circumstances, configurations, protection or hazards. Storage and handling of some ammunition items are MAJCOM unique and do not fit into any criteria contained in this Manual. In such cases, request guidance in writing through command channels to AFSC/SEW, describing the specific situation, explaining the ammunition item and how it will be stored and handled. The AFSC/SEW letter of approval may be incorporated into the MAJCOM supplement to this Manual.

12.13.11. **(ACC)** Send request to HQ ACC/SEW.

Section 12F—Allowable Exposures

12.14. General. This section identifies allowable exposures to explosives. Further specific guidance may be found in the appropriate sections of this Manual. Contact your MAJCOM/SEW for assistance in determining required separation if guidance is not provided in this Manual.

12.15. Allowable IBD Exposures.

12.15.1. Buildings inhabited by people not related to munitions or explosives work. The following facilities are not considered "related" to any PES:

12.15.1.1. Force Support Squadron (formally MWR) facilities that contain structures.

12.15.1.2. Base civil engineering headquarters.

12.15.1.3. Industrial facilities, including central base supply.

12.15.1.4. Family housing, passenger terminals, and chapels.

12.15.1.5. Military billets, including permanent party dormitories, transient quarters, and other temporary billeting facilities, such as tent cities.

12.15.1.6. Commissaries, schools, and nurseries.

12.15.1.7. Wing and base headquarters, staff agencies (i.e., plans, manpower, safety, comptroller functions, etc).

12.15.1.8. Hospitals and dispensaries.

12.15.1.9. Theaters.

12.15.1.10. Main exchanges, except for flight line annexes.

12.15.1.11. Base fire departments, except for flight line fire stations.

12.15.1.12. Law enforcement and Base Defense Operations Center.

12.15.1.13. Hydrazine servicing facilities which support multiple bases.

12.15.1.14. Recreation facilities (e.g., ball diamonds, golf courses and volleyball courts) that contain structures, such as concession stands or bleachers. Note: PTR may be applied to the field, course or court but IBD is required to the subject structures.

12.15.1.15. Flightline passenger service functions (e.g., terminal buildings).

12.15.1.16. Main powerhouses that provide vital utilities to a major portion of an installation.

12.15.1.17. Essential warehouses, shops and other facilities that by reason of their vital strategic nature, or high intrinsic value of their contents, should not be placed at risk.

12.15.1.18. Functions that, if momentarily put out of action, would cause an immediate secondary hazard by reason of their failure to function.

12.15.1.19. Public traffic routes with high traffic density as described in paragraph 12.3.2.1.

12.15.1.20. Auxiliary building when not directly related to the explosives mission and when accessed by personnel not directly related to the explosives mission. (See paragraph 12.16.9 if no structure is involved.) See **paragraph 12.68.3**.

12.15.1.21. Joint DoD or non-DoD use runway.

12.15.1.22. EOD facilities (offices, classrooms, shops) if they support multiple locations or organizations.

12.15.1.22. **(ACC)** Inhabited building distance (IBD) applies to vehicle parking and equipment storage at the permanent EOD facility.

12.15.1.23. Main base support fire stations.

12.15.1.24. Ground control approach (GCA), radar approach control (RAPCON), and air traffic control towers that support a joint use airfield, from all PESs.

12.15.1.25. GCA, RAPCON, and air traffic control towers that support a military use only airfield, from non-flight line PESs. The IBD will be based on blast overpressure only; fragment distances will not be used.

12.15.1.26. Hazardous waste collection points which do not exclusively support an explosives area.

12.15.1.27. Unoccupied structures housing weather equipment not exclusively supporting an explosives area. The IBD will be based on overpressure only; fragment distances will not be used.

12.15.1.28. Activities such as concerts, bazaars, and ceremonies (e.g. change of command, etc.) attended by people not related to munitions or explosives work.

12.15.1.29. **(Added-ACC)** IBD applies to mobility/deployment processing centers.

12.15.2. Installation boundary. If a proposed PES would create an IBD clear zone extending beyond the base boundary, the hazard becomes a legal issue and MAJCOM/JA coordination will be required prior to establishing or constructing the PES. **Note:** Restrictive easements, Memorandums of Agreement (MOAs), and Memorandums of Understanding (MOUs) do not address existing exposures encumbered by the explosives clear zone of the PES. Existing exposures must be identified in the site plan request package and approved by the DDESB or AFSC for the QD exception. An IBD arc may fall outside of the installation boundary, without causing an exception to QD requirements, provided one of the following methods of protecting the public and public property is complied with:

12.15.2.1. Off-base land owned by a Federal, State, or Municipal agency in the continental United States or its possessions or territories.

12.15.2.1.1. An existing restrictive easement, MOA, or MOU encompasses the off-base land encumbered by the explosives clear zone of the PES. Prior to establishing the PES, SE, CE, and JA representatives must review and ensure compliance with applicable in-place restrictive easement, MOA, or MOU rights. The commander will designate personnel to perform a quarterly review of the area to ensure compliance with the restrictive easement, MOA, or MOU.

12.15.2.1.2. A new restrictive easement, MOA, or MOU is obtained from the land owner for the off-base land encumbered by the explosives clear zone prior to establishing or constructing the PES. Before funding construction, the installation commander, Facility Board, and facility user must be briefed and accept the need to reduce or eliminate NEWQD in the user's facility to prevent an exception should the desired restrictive easement not be obtained. Request for preliminary explosives site plan approval may be sought prior to obtaining the restrictive easement. Documentation substantiating that the restrictive easement has been coordinated with the Air Force Real Property Agency (AFRPA) and recorded with the USACE will be submitted with the request for final explosives site plan approval. The commander will designate personnel to perform a quarterly review of the area to ensure compliance with the restrictive easement.

12.15.2.1.3. Off-base land owned by another DoD agency. In cases where an Air Force PES generates an explosives IBD clear zone encroaching onto property owned by another DoD service, the local Air Force organization responsible for submitting the site plan will obtain written acknowledgement from the exposed service component SE and CE equivalent offices for inclusion with the site plan submission package. It will be up to the acknowledging agency to update their maps to reflect the Air Force explosives clear zone for their future planning purposes and to notify the Air Force unit of any planned exposures. The MAJCOM and AFSC will coordinate with the applicable service component equivalent prior to requesting DDESB site plan approval. Recommend establishing a Memorandum of Understanding or Agreement with the other DoD agency.

12.15.2.1.4. Off-base land owned by other Federal Agencies. In cases where an Air Force PES generates an explosives IBD clear zone encroaching onto property owned by another federal agency, the local Air Force organization responsible for submitting the site plan will obtain written acknowledgement from the exposed agency SE and CE equivalent offices for inclusion with the site plan submission package. It will be up to the acknowledging agency to update their maps to reflect the Air Force explosives clear zone for their future planning purposes and to notify the Air Force unit of any planned exposures. AFSC will coordinate with the applicable agency equivalent prior to requesting DDESB site plan approval. Recommend establishing a Memorandum of Understanding or Agreement with the other Federal agency.

12.15.2.2. Off-base land owned by a private land owner requires a restrictive easement. All other requirements stated above in paragraphs 12.15.2.1.1 and 12.15.2.1.2 apply.

12.15.2.3. The off-base land encumbered by the explosives clear zone is open and manifestly unsuitable for habitation or public gatherings, is government land that is not open to the public, or access is restricted and controlled by other means. Only appropriate local government agencies for public safety, environment and health can declare land outside the base boundary unsuitable for habitation or public gatherings. Documentation determining this land unsuitable for habitation or public gatherings must be maintained with real property records. The commander, Facility Board, and facility user must be briefed and accept the need to reduce or eliminate NEWQD in the PES creating the clear zone to prevent an exception should a new encumbrance occur. The commander will designate personnel to perform a quarterly review of the area to ensure it

remains open, uninhabited and unused and he or she should periodically reconsider obtaining a restrictive easement, MOA, MOU or purchasing the land.

12.15.2.4. Establishing a clear zone beyond the installation boundary that does not involve a private land owner and where no new construction is involved: If the IBD clear zone extends past the installation boundary, an exception must accompany the explosive site plan unless the following compensatory measures can be accomplished:

12.15.2.4.1. A signed letter of agreement between the installation commander and airport manager stating that non-related personnel and activities will not be exposed when the mission generating the clear zone is implemented. Letters of Agreement are not intended to insinuate the land owner accepts the risk, but rather to confirm exposures will be eliminated when mission accomplishment dictates need.

12.15.2.4.2. Letter of Agreement must address termination terms of the LOA in writing with the appropriate parties. The LOA must be coordinated with CE and JA to validate all the terms of the agreement.

12.16. Allowable PTRD Exposures.

12.16.1. Public traffic routes with medium traffic density as described in paragraph 12.3.2. Medium traffic density criteria apply, as a minimum, to recreational activity that is extensive and occurs on a regular basis.

12.16.2. Public traffic routes with low traffic density as described in paragraph 12.3.2. The PTRD will be based on blast overpressure only; fragment distances will not be used. Normal PTRD required for HD 1.2.X.

12.16.3. On-Base Roads. On-base roads traveled by personnel not involved in munitions-related operations are now considered public traffic routes. QD criteria is based on the traffic density (see paragraphs 12.3.2., 12.16.1 and 12.16.2.). In order to prevent the generation of a significant number of QD exemptions for existing roads, the procedures below have been established for assessing, documenting, and accepting the risks associated with application of QD criteria to on-base roads for PES/on-base road relationships which existed prior to 1 Oct 00. After 1 Oct 00, any changes to a PES which increase its QD arc, construction of a new PES, construction of a new on-base road, or change in traffic density, will require application of QD criteria to on-base roads which are traveled by personnel not involved in PES-related operations (see also A5.3.) If QD criteria cannot be met, obtain an exemption per Section 1B.

12.16.3.1. For those sited (DDESB- or AFSC-approved or MAJCOM baseline-approved) PES/on-base road relationships which existed prior to 1 Oct 00, the following risk assessment and documentation must be accomplished:

12.16.3.1.1. On a copy of the installation map, identify the following:

12.16.3.1.1.1. All PESs having QD arcs (PTRD or IBD based on traffic density) encompassing on-base roads traveled by personnel not involved in munitions-related operations.

12.16.3.1.1.2. The NEWQD of the above PESs.

12.16.3.1.1.3. The applicable QD arcs (PTR or IBD) of the above PESs based on

the traffic density.

12.16.3.1.1.4. The segments of the applicable on-base roads which pass through the above arcs.

12.16.3.1.2. Perform a risk assessment of the relationships shown above in accordance with Chapter 4. Some factors that might be considered include:

12.16.3.1.2.1. Operational necessity.

12.16.3.1.2.2. The operation being performed (e.g., static storage, maintenance, and production).

12.16.3.1.2.3. Operational activity cycles.

12.16.3.1.2.4. Alternate routes.

12.16.3.1.2.5. Traffic density.

12.16.3.1.2.6. Accident records.

12.16.3.1.2.7. Time interval of exposure.

12.16.3.1.2.8. Type and quantity of munitions in proximity to the area transited.

12.16.3.1.2.9. The closest distance from the area transited to the PES.

12.16.3.1.2.10. The need for installation-related personnel to transit the QD arc.

12.16.3.1.2.11. Consideration of methods to inform transients of potential risks (e.g., written acknowledgement of the risk by vendors or others with a recurring need to transit the QD arc, warning signs, flashing lights, physical barriers, etc.).

12.16.3.1.3. Document the commander's risk acceptance through a formal memorandum. This memorandum must include the map showing the relationships for which he or she is accepting risk, a summary of the risk assessment, and a statement that the subject relationships existed as of 1 Oct 00. Upon change of approving authority, ensure the new commander is informed of the previous risk acceptance.

12.16.3.2. The commander's risk acceptance and attached map must be included in amendments to site plans (for PESs which existed prior to 1 Oct 00) or referenced if previously submitted with another site plan amendment.

12.16.4. Open-air recreation facilities (e.g., ball diamonds, golf courses and volleyball courts), which do not contain structures, used for Force Support Squadron (formally MWR) and community relations' purposes at military installations and activities. As an exception, neither blast nor fragment criteria apply, when such facilities are located near AE support operations and are used only by off-duty military or on-duty military or DoD civilians or contractors (e.g., munitions workers, security guards, firefighters) who directly support these AE operations. This total relaxation of QD requirements applies only when the PES and the ES are related closely as with a security alert force and explosives facilities for which they are responsible; it does not authorize the building of elaborate structures that substitute for properly sited recreational facilities or the collocation of unrelated military functions. Separate at ILD from other related PESs.

12.16.5. Open, military only or other combatant-type training areas. Examples include areas used for Rapid Runway Repair, Security Force exercises, and areas used by CE Red Horse personnel. If areas include fixed facilities, including small classrooms designed for occasional use coincident with the use of the training area, apply incremental IBD with a minimum of PTRD to the facility. As an exception, to allow for realism in training, this separation does not apply to AE needed for any particular exercise or on-the-job training. However, this separation or equivalent protection is required from permanent PESs.

12.16.5. **(ACC)** When IBD is not met these areas will not be used for other unrelated functions (e.g., college classrooms during non-duty hours).

12.16.6. Aircraft battle damage repair training areas.

12.16.7. Open-air aircraft passenger loading and unloading areas.

12.16.8. Parking lots for administrative areas. See **paragraph 12.67.2**.

12.16.9. Auxiliary storage located in the open (no structures involved) when not directly related to the explosives mission and when accessed by personnel not directly related to the explosives mission. (See **paragraph 12.15.1.20**. if located within a structure.) See **paragraph 12.68.2**.

12.16.10. Unmanned antenna/antenna farms when not directly related to the explosives mission. These are facilities that generate electromagnetic radiation which may or may not pose a threat to EEDs. A greater distance may be required to protect EEDs at the PES. See Chapter 9 to determine safe separation distances. PTRD will be based on blast overpressure only; fragment distances will not be used.

12.16.11. Unoccupied weather equipment (antennas, ceilometers, etc.) not exclusively supporting an explosives area and when located in the open. The PTRD will be based on overpressure only; fragment distances will not be used.

12.16.12. Joint DoD-non-DoD use taxiway. A taxiway serving both DoD and commercial aircraft. A taxiway serving solely DoD, DoD chartered, or non-DoD aircraft on DoD authorized business is not joint use.

12.16.13. Operating personnel exposed to explosives research, development and test operations that are conducted by remote control procedures will be provided protection as outlined in paragraph 4.17., 4.18.1. and 4.18.2. Non-operating personnel will be provided IBD protection.

12.16.14. Land used for agricultural purposes.

12.16.14.1. Apply PTRD without a minimum fragment distance for new PES locations or when a new site plan is required for an existing PES when the following conditions exist:

12.16.14.1.1. When the exposure is frequent or higher (as described in Table 1.2 Exposure). For example when manual methods and numerous laborers are needed for certain types of crops or locations.

12.16.14.1.2. QD is not required when the exposure is determined to be occasional or lower. See Table 1.2.

12.16.14.2. PES-ES relationships existing prior to the publication date of this AFMAN revision is not required to meet the above criteria.

12.17. Allowable Unbarricaded ILD Exposures. For the following situations, the use of unbarricaded ILD may be used:

12.17.1. Explosives operating locations (e.g., surveillance, maintenance, inspection) directly related to the PES; the PES may be an explosives storage or operating location. When necessary to conduct dissimilar concurrent operations, the operations must be arranged to provide a minimum of ILD protection either by distance or equivalent protection, or must be operations which do not require QD separation. MAJCOM supplements to this Manual will provide guidance on determining whether operations within a single facility require QD separation; factors to consider are:

12.17.1. **(ACC)** Each facility where explosive operations take place will have an O.I. addressing the specific limitations on concurrent operations at that facility. If it's determined that concurrent operations will not be performed, that decision will be documented in the O.I. Concurrent operations restrictions apply to dissimilar explosives operations. Concurrent operations restrictions do not apply when intra-line protection is met through distance or equivalent protection. Concurrent operations restrictions also do not apply to similar operations. See AFMAN 91-201 para 12.17.1.1. thru 12.17.1.4. for additional information.

12.17.1.1. Whether the same personnel are involved in both operations (e.g., AE workers are assigned to the same flight and will move between operations as required).

12.17.1.2. Whether the same AE are involved in both operations (e.g., air-to-air missiles, chaff or flare).

12.17.1.3. Whether the operations are the same type (e.g., inspection, buildup).

12.17.1.4. Whether the AE involved in both operations presents similar hazards (e.g., same HD or CG).

12.17.2. Parallel operating lines, provided the AE involved in each operating line present similar hazards. (Note: The criticality or survivability of one or more of the operating lines may require that each line be given IBD-level protection.) Successive steps within a single explosives process or operation will be provided as much protection as practical, but do not require QD separation. If the successive steps are housed in separate facilities provide ILD separation between facilities.

12.17.3. Non-explosives facilities, excluding magazine-area loading docks, that are used exclusively in support of a PES or explosives area. Such facilities include:

12.17.3.1. Gatehouses.

12.17.3.2. Field offices for branch or flight level supervision, Munitions Operations (AFK), munitions control, training, mobility, etc. (See paragraph 12.20.3.5 for offices of personnel who perform hands-on work and their first level supervisors.)

12.17.3.3. Dunnage preparation.

12.17.3.4. Small packing and shipping buildings.

12.17.3.5. Dog kennels.

12.17.3.6. Area security control (apply IBD to Base Defense Operations Center per paragraph 12.15.1.12).

12.17.3.7. Motor pool dispatch points (for vehicles supporting storage area only).

12.17.3.8. Staffed power plants and staffed non-explosive hazardous material collection points.

12.17.3.9. Response force tactical facilities (RFTF).

12.17.3.10. Lunch rooms.

12.17.3.11. Break rooms and change houses supporting multiple PESs.

12.17.3.12. Inert operations involving components of an explosive weapon system; the operation must involve support of an explosive operation such as repairing bomb fins, or the operation simulates an explosive operation.

12.17.3.13. Auxiliary fire stations (apply IBD to main base support fire stations per paragraph 12.15.1.11.).

12.17.3.14. Training facilities.

12.17.3.15. Manned facilities of a defensive or tactical missile battery.

12.17.3.16. GCA, RAPCON, and air traffic control towers that support a military use only airfield from flight line PESs.

12.17.3.17. Unmanned antenna/antenna farms. These are facilities that generate electromagnetic radiation which may or may not pose a threat to EEDs. A greater distance may be required to protect EEDs at the PES. See Chapter 9 to determine safe separation distances.

12.17.3.18. Unoccupied weather equipment facilities from the explosives area being supported.

12.17.3.19. Maintenance of military vehicles or equipment that are located outside the U.S., when the PES is a basic load or a ready storage area (see **paragraph 13.11**.). In such cases:

12.17.3.19.1. The NEWQD at each PES is limited to 8,818 lbs or less.

12.17.3.19.2. The maintenance work must be performed exclusively for the unit for which the AE is stored.

12.17.4. Auxiliary power and utilities functions including auxiliary power plants; compressor stations; electric power transformers; tool and consumable supplies storage and issue; and handling equipment service, battery charging, and minor repair. When such facilities serve an entire base complex, or when loss of the facility will cause an immediate loss of vital function, the minimum exposure level will be IBD.

12.17.5. Minimum distance between separate groups of AE-loaded, combat-configured aircraft. For QD purposes, all combat forces at a single location are considered related. This may include Air Force, Army, Navy, Marines, and host nation aircraft. One set of QD criteria applies to all combat forces at a single location (e.g., facilities or functions related to Air Force fighter aircraft are also related to Navy fighter aircraft). When the services

disagree on the required QD, forward the problem through MAJCOM channels to AFSC/SEW for action. The use of intervening barricades is required to eliminate propagation by primary fragment impact; thereby eliminating the need to total NEWQD. (Note: Loading AE aboard aircraft can be accomplished with each group of aircraft without additional protection.)

12.17.6. Combat Aircraft Related Activities. See **paragraph 12.40**.

12.17.7. Cargo Aircraft Related Activities. See **paragraph 12.41**.

12.17.8. Munitions or Weapons Storage Area Related Activities. See **paragraph 12.42**.

12.17.9. Parking areas for privately owned vehicles (POVs) supporting multiple PESs. See **paragraph 12.67.3**.

12.17.10. Exposures that are provided blast suppression and structure hardening so that equivalent ILD protection for personnel and equipment is provided. Separate the following hardened facilities at reduced intraline (related facility) distance based upon their degree of hardening. Minimum separation distances for occupied facilities from HASs (see paragraph 12.51.13.) still apply. Note: Provide definitive designs which justify reduced K-factor.

12.17.10.1. Hardened Liquid Oxygen (LOX) Generation or Bulk Storage Facilities.

12.17.10.2. Hardened POL Truck Shelters. (Use IBD for parking areas for fuel service trucks unrelated to the PES.)

12.17.10.3. Hardened Chemical Biological Radiological (CBR) Collective Protection Facility - K7.

12.17.10.4. Hardened Squadron Operations Facility - K7.

12.17.10.5. Hardened Response Force Tactical Facility (RFTF) - K9.

12.17.10.6. Survivable Collective Protection System (SCPS) with a minimum of 5 feet earth cover - K3; with a minimum of 3 ft but less than 5 feet of earth cover - K5. Note: SCPS built before 1 September 1988 at less than minimum separation distances for occupied facilities from HASs (see **paragraph 12.51.13**.) do not require a waiver or exemption.

12.17.11. Construction activities exposed by explosives facilities or operations. This separation requirement applies to all construction activities whether being accomplished by civilian, military, or host nation personnel. Document a risk assessment (see Chapter 4), including the control measures taken. Locally maintain the risk assessment documentation until operations have been completed and personnel have permanently vacated the work site. If this separation cannot be maintained, obtain a waiver per Section 1B.

12.18. Allowable Barricaded ILD Exposures.

12.18.1. Continue to use K9 to properly barricade facilities sited at K9 before 1 June 1980 until a revised siting of that facility is necessary, except as noted in paragraph 12.18.2. Comply with this Manual when resiting of such facilities is required.

12.18.2. Use Barricaded ILD for the following facilities with barricades meeting the construction and location criteria of Section 6E, or from the side or rear of ECMs per paragraph 12.24.2:

12.18.2.1. Occupied facilities of a defensive or tactical missile battery where greater distances from the PES cannot be provided for technical or tactical reasons.

12.18.2.2. Field operations in magazine areas when performing minor maintenance, packaging or surveillance inspections (from adjacent magazines).

12.18.2.3. Successive steps of a single production, renovation, or maintenance operation housed in separate facilities.

12.18.2.4. A security alert force (apply IBD to central security control per paragraph 12.15.1.12).

12.18.2.5. Break rooms and change houses that are part of an operating line, used exclusively by personnel operating the line, and are not integral to the PES.

12.18.2.6. Dunnage preparation or similar non-AE operations, if used only by personnel employed at the PES.

12.18.2.7. Temporary holding areas for AE conveyances servicing production or maintenance facilities.

12.18.2.8. Service magazines supporting an explosives operating location.

12.18.3. Unoccupied auxiliary utility functions (e.g., transformer stations, water treatment and pollution abatement facilities) that serve an explosives area, but are not an integral function in the explosives area, and that would not create an immediate secondary hazard if lost. Such unmanned facilities need not be barricaded.

12.19. Allowable IMD Exposures.

12.19.1. Container stuffing and unstuffing operations in magazine areas that provide routine support to multiple PESs.

12.20. Other Allowable Exposures.

12.20.1. Facilities that exclusively support an explosives area may be separated from the PESs in the explosives area as follows:

12.20.1.1. Unmanned hazardous material collection points may be located at fire protection distance (50 ft for non-combustible structures, 100 ft for combustible structures).

12.20.1.2. When essential for security purposes, site one-person guard towers at 50 feet (fire break distance) from explosives locations.

12.20.1.3. Unmanned auxiliary power generation or conversion facilities (e.g., power plants, transformers, etc.) that exclusively supply power to an explosives area or security fence lighting may be located at fire protection distance (50 ft for non-combustible structures, 100 ft for combustible structures.

12.20.1.4. Small latrines may be located at fire protection distance (50 ft for non-combustible structures, 100 ft for combustible structures). This facility type is limited to toilets and sinks and do not contain showers, clothing lockers, or other conveniences.

12.20.2. The following facilities that exclusively support a single PES may be located at fire protection distance (50 ft for non-combustible structures, 100 ft for combustible structures) from the PES they support; provide separation to all other PESs:

12.20.2.1. Transformers.

12.20.2.2. Low pressure boilers. Some specially designed operating buildings have attached rooms for low-pressure boilers and other facilities. These buildings have safety features such as protective concrete separating walls (without openings) between boiler and working areas, light roof and frangible exterior walls for boiler enclosures. Such buildings, built according to Air Force definitive drawings, require no separation. This exception applies only where equipment installed or contained in attached rooms meets or exceeds original specifications and does not create additional hazards.

12.20.2.3. Paint storage buildings.

12.20.2.4. Auxiliary facilities such as heating plants, line offices, break areas, briefing rooms for daily work schedules or site safety matters, joiner shops, security posts, and similar functions.

12.20.3. The following facilities require no QD or fire protection distance separation:

12.20.3.1. One-person security structures for weapons-loaded aircraft; provide fire protection distance separation when possible.

12.20.3.2. Guard (sentry) shelters.

12.20.3.3. Defensive fighting positions.

12.20.3.4. Break rooms, supply rooms, and change houses integral to a PES.

12.20.3.5. Offices, integral to a PES, of personnel who perform hands-on work in the PES (e.g., assemble, maintain, inspect, and test), and the NCOIC and first level supervisors (crew chiefs) of those who do hands-on work.

12.20.4. The following facilities require no QD but fire protection distance separation applies:

12.20.4.1. Abandoned facilities. These facilities may or may not be scheduled for demolition.

Section 12G—Hazard Zones for ECMs and HASs

12.21. Hazard Zones for ECMs and HASs. QD criteria for ECMs and HASs are dependent upon the orientation of these PESs. The QD criteria in this Manual refer to “front,” “side,” and “rear” relationships for ECMs and HASs.

12.21.1. Use Figure 12.1 to determine whether an ES is exposed to the front, side or rear of an ECM.

12.21.1.1. The forward sector, or “front,” for an ECM is that area 60 degrees either side of the ECM's centerline (120 degrees combined angle), with the vertex of the angle placed so that the sides of the angle pass through the intersection of the headwall and sidewalls.

12.21.1.2. The rear sector, or "rear," of an ECM is that area 45 degrees either side of the magazine centerline (90 degrees combined angle) with the vertex of the angle placed so that the sides of the angle pass through the intersection of the rear and side walls

12.21.1.3. All other orientations are considered "side" sectors.

12.21.2. Use Figure 12.2 to determine ECM to ECM orientation effects on IMD.

12.21.3. Use Figure 12.3 to determine whether an ES is exposed to the front, side or rear of a HAS.

Section 12H—HD 1.

12.22. HD 1.1 Hazardous Fragment Distances. The minimum distance for protection from hazardous fragments will be based on primary and secondary fragments from the PES and the population or traffic density of the ES. The hazardous fragment distance (HFD) is defined as the distance at which the density of hazardous fragments becomes 1 per 600 ft^2. (Note: This distance is not the maximum fragment range.)

12.22.1. The HFD may be determined by:

12.22.1.1. Default values, such as those shown in Table 12.4 for primary fragments or Tables 12.4 and 12.10 secondary fragments.

12.22.1.2. Some items have been evaluated for minimum HFD with results shown in Table 12.5.

12.22.1.3. Some items, through testing, have been hazard classified with a specific HFD presented in the format HD (xx)1.1. The HFD for these items is specified in hundreds of feet (in parenthesis). These items may or may not be listed in Table 12.5.

12.22.1.4. DDESB-approved analyses and approved tests may be used to determine minimum distances for both primary and secondary fragments. DDESB TP 13, *Prediction of Building Debris for Quantity-Distance Siting* is an example of a method to determine minimal distances for building debris, while DDESB TP 16, *Methodologies for Calculating Primary Fragment Characteristics* and DDESB TP 10, Change 3, *Methodology For Chemical Hazard Predictions* provide similar information for primary fragments.

12.22.2. Examples when minimum hazardous fragment and firebrand distances need not apply are:

12.22.2.1. Recreation or training facilities when such facilities are located near AE support operations and are used by off-duty military or on-duty military or DoD civilians or contractors (e.g., munitions workers, security guards, firefighters) who directly support these AE operations.

12.22.2.2. Related and support DoD-controlled functions for which IMD and ILD would normally apply.

12.22.2.3. Maintenance, supply, training facilities, and operations offices for logistical or operational support of combat aircraft, battalion-size or smaller delivery or AE supply

units, separate air defense firing batteries, or a single pier or wharf for which the AE in a PES is intended.

12.22.2.4. Between a PES and inert storage, whether in a facility or in the open.

12.22.2.5. Between facilities in an operating line; between operating lines; and between operating lines and storage locations.

12.22.3. Minimum hazardous fragment distances apply to:

12.22.3.1. An installation's boundary.

12.22.3.2. Administration and housing areas.

12.22.3.3. Recreation facilities (e.g., ball diamonds, golf courses and volleyball courts). (Note: See paragraph 12.22.2.1 for situations where minimum fragment distances do not apply to recreational facilities.)

12.22.3.4. Flightline passenger service functions (e.g., terminal buildings).

12.22.3.5. Utilities that provide vital functions to a major portion of an installation.

12.22.3.6. Auxiliary storage and shops that by reason of their vital strategic nature, or high intrinsic value of their contents, should not be placed at risk.

12.22.3.7. Functions that, if momentarily put out of action, would cause an immediate secondary hazard by reason of their failure to function.

12.22.3.8. Privately owned vehicles parked in administrative areas.

12.23. HD 1.1 IBD and PTRD. Table 12.1 provides a summary matrix of all the paired relationships for HD 1.1.

12.23.1. For locations provided IBD or PTRD protection per paragraphs 12.15 and 12.16, the HD 1.1 IBD and PTRD will be as follows:

12.23.1.1. HD 1.1 NEWQD $\leq$ 450 lbs.

12.23.1.1.1. For HD 1.1 in a 7-Bar or a 3-Bar ECM, use ECM Front/Side/Rear IBD and PTRD as shown in Table 12.6.

12.23.1.1.2. For HD 1.1 in an Undefined ECM where the loading density (NEWQD (lbs)/internal volume (ft^3)) is $\leq$ 0.028 lbs/ft^3, use ECM Front/Side/Rear IBD and PTRD as shown in Table 12.6.

12.23.1.1.3. For HD 1.1 in an Undefined ECM where the loading density is > 0.028 lbs/ft^3, use ECM Side/Rear IBD and PTRD as shown in Table 12.6 for side/rear exposures. For front exposures, IBD is the greater of the ECM Front IBD as shown in Table 12.6, the HFD found in Table 12.4, the specific item HFD as shown in Table 12.5, or the parenthetical fragment distance, whichever is greater. When using Table 12.4, use the "Structure" column only if the ECM headwall meets the definition of AGS (H) as defined in the legend of Table 12.2 or for non-fragment producing explosives. PTRD is 60% of the resulting IBD.

12.23.1.1.4. Where ECM, regardless of structural designation, have been designed, analyzed, or tested to have a reduced IBD and PTRD and have been approved by the DDESB, use the approved IBD and PTRD.

12.23.1.1.5. For HD 1.1 in a structure (excluding ECM) capable of stopping primary fragments, but which can contribute to the debris hazard, use the HFD listed in the "Structure" column of Table 12.4 . PTRD is 60% of HFD. Structures that are capable of stopping primary fragments include all heavy wall (H) and heavy wall/roof (H/R) AGS, as defined in the Legend for Table 12.2. Doors and other openings through which primary fragments could exit must be capable of stopping primary fragments from exiting the facility or will be barricaded in accordance with Section 6E to trap primary fragments that could exit the facility. All other structures (other than ECM) are considered incapable of stopping primary fragments.

12.23.1.1.6. Selected items have been evaluated for minimum HFD with results shown in Table 12.5. Other items, through testing, have been hazard classified with a specific HFD presented in the format HD (xx)1.1. The HFD for these items is specified in hundreds of feet (in parenthesis), and may not be listed in Table 12.5. The HFD for these two categories apply only to items in the open. When in facilities, secondary debris as well as primary fragments must be considered. If in a facility incapable of stopping primary fragments, IBD is the greater of the HFD for Open locations as shown in Table 12.4, the specific item HFD as shown in table 12.5, or the parenthetical fragment distance. For items not listed in Table 12.5 or assigned a parenthetical fragment distance, use the "Open" column of Table 12.4. PTRD is 60% of the resulting IBD.

12.23.1.1.7. For bare (non-fragment producing) explosives in any structure (excluding ECM), truck, trailer, or railcar that may contribute to the debris hazard, use the HFD listed in the "Structure" column of Table 12.4. PTRD is 60% of HFD.

12.23.1.1.8. For bare (non-fragment producing) explosives in the open, IBD is K40; PTRD is 60% of the resulting IBD.

12.23.1.1.9. For exposures not requiring fragment protection per paragraph 12.22.2, IBD is K40; PTRD is 60% of the resulting IBD.

12.23.1.2. HD 1.1 NEWQDs in the range 451 to 30,000 lbs.

12.23.1.2.1. The minimum HFD will be 1250 ft. Facilities sited at 1,235 ft or 1,245 ft per past standards will be considered to be in compliance with the 1,250 ft minimum requirement.

12.23.1.2.2. For HD 1.1 in a 7-Bar or a 3-Bar ECM, use ECM Front/Side/Rear IBD and PTRD as shown in Table 12.6.

12.23.1.2.3. For HD 1.1 in an Undefined ECM where the loading density is $\leq$ 0.028 lbs/ft^3, use ECM Front/Side/Rear IBD and PTRD as shown in Table 12.6.

12.23.1.2.4. For HD 1.1 in an Undefined ECM with minimum internal dimensions of 26 ft wide and 60 ft long, use ECM Side/Rear IBD and PTRD as shown in Table 12.6, for side/rear exposures. For front exposures, IBD is the greater of the Other PES IBD as shown in Table 12.6, or the parenthetical fragment distance if it is greater than 1250 ft; PTRD is 60% of the resulting IBD.

12.23.1.2.5. For HD 1.1 in an Undefined ECM where the loading density is > 0.028 lbs/ft^3 and internal dimensions are less than 26 ft wide and 60 ft long, use Other PES

IBD and PTRD as shown in Table 12.6 for side and rear exposures. For front exposures, IBD is the greater of the Other PES IBD as shown in Table 12.6, or the parenthetical fragment distance if it is greater than 1250 ft; PTRD is 60% of the resulting IBD.

12.23.1.2.6. For HD 1.1 in a structure (excluding ECM), use the Other PES IBD and PTRD distances as shown in Table 12.6. However, if the item has a parenthetical fragment distance that is greater than 1250 ft, use the parenthetical fragment distance as the IBD; PTRD is 60% of the resulting IBD.

12.23.1.2.7. For HD 1.1 in the open, use the Other PES IBD and PTRD distances as shown in Table 12.6. However, if the item has a parenthetical fragment distance or a specific item HFD distance as shown in Table 12.5, this value may be used in place of the 1250 ft minimum HFD. IBD is the greater of K40, or the parenthetical fragment distance or specific item HFD as shown in Table 12.5; PTRD is 60% of the resulting IBD.

12.23.1.2.8. For bare (non-fragment producing) explosives in the open, IBD is K40; PTRD is 60% of the resulting IBD.

12.23.1.2.9. For exposures not requiring fragment protection per paragraph 12.22.2, IBD is K40; PTRD is 60% of the resulting IBD.

12.23.1.3. HD 1.1 NEWQDs > 30,000 lbs.

12.23.1.3.1. For HD 1.1 in a 7-Bar or a 3-Bar ECM where internal dimensions are a minimum of 26 ft wide and 60 ft long, use ECM IBD and PTRD as shown in Table 12.6.

12.23.1.3.2. For HD 1.1 in a 7-Bar or a 3-Bar ECM where internal dimensions are less than 26 ft wide and 60 ft long, use Other PES IBD and PTRD as shown in Table 12.6 for front, side and rear exposures.

12.23.1.3.3. For HD 1.1 in an Undefined ECM where internal dimensions are a minimum of 26 ft wide and 60 ft long, use ECM Side/Rear IBD and PTRD as shown in Table 12.6 for side/rear exposures. For front exposures, IBD is the greater of the Other PES IBD as shown in Table 12.6, or the parenthetical fragment distance if it is greater than 1250 ft; PTRD is 60% of the resulting IBD.

12.23.1.3.4. For HD 1.1 in an Undefined ECM where internal dimensions are less than 26 ft wide and 60 ft long, use Other PES IBD and PTRD as shown in Table 12.6 for side/rear exposures. For front exposures, IBD is the greater of the Other PES IBD as shown in Table 12.6, or the parenthetical fragment distance if it is greater than 1250 ft; PTRD is 60% of the resulting IBD.

12.23.1.3.5. For HD 1.1 in a structure (excluding ECM) or in the open, use the Other PES IBD and PTRD distances as shown in Table 12.6. However, if the item has a parenthetical fragment distance that is greater than 1250 ft, use the parenthetical fragment distance as the IBD; PTRD is 60% of the resulting IBD.

12.23.1.3.6. For exposures not requiring fragment protection per paragraph 12.22.2, IBD is K40/50 as described in Table 12.6, note 3. PTRD is 60% of the resulting IBD.

12.24. HD 1.1 ILD. Table 12.1 provides a summary matrix of all the paired relationships for HD 1.1.

12.24.1. Unbarricaded ILD from an ECM. Testing has shown that some attenuation of airblast overpressure relative to an unconfined surface burst occurs out the sides and rear of an ECM and a slight increase occurs out the front of an ECM. The equivalent K18 unbarricaded ILD from an ECM, when accounting for this attenuation, is as shown in Table 12.7 for exposures permitted at unbarricaded ILD per paragraph 12.17. (Note: Airblast forms the bases for the equations given in the notes to Table 12.7.) Note: Per paragraph 12.17.10, some hardened structures may be sited at a reduced unbarricaded ILD.

12.24.2. Barricaded ILD from an ECM. The equivalent K9 barricaded ILD from an ECM is as shown in Table 12.7 for exposures permitted at barricaded ILD per paragraph 12.18. Use of barricaded ILD from the front of an ECM requires that a properly constructed, intervening barricade be located between the ES and the PES. This barricade must meet the construction and location criteria of Section 6E. If an ECM's earth cover meets all construction criteria of Section 6E, it will qualify as a barricade and use of barricaded ILD from the sides or rear of the ECM is permissible. Failure of the ECM's earth cover to meet the criteria of Section 6E will require use of unbarricaded ILD siting purposes.

12.24.3. Unbarricaded ILD from Other than an ECM. The unbarricaded ILD from all PESs other than ECMs is as shown in Table 12.8 for exposures permitted at unbarricaded ILD per paragraph 12.17. Note: Per paragraph 12.17.10, some hardened structures may be sited at a reduced unbarricaded ILD.

12.24.4. Barricaded ILD from Other than an ECM. The barricaded ILD from all PESs other than ECMs is as shown in Table 12.8 for exposures permitted at barricaded ILD per paragraph 12.18. Use of barricaded ILD requires that a properly constructed, intervening barricade be located between the ES and the PES. This barricade must meet the construction and location criteria of Section 6E.

12.25. HD 1.1 IMD. IMD from magazines is as shown in Table 12.1. The IM distances given for 100 lbs NEW in tables 12.30. and 12.31. constitute the minimum magazine separations permitted.

12.25.1. Barricaded IMD from an ECM. Use of barricaded IMD from the front of an ECM requires that a properly constructed, intervening barricade be located between the ES and the PES. This barricade must meet the construction and location criteria of Section 6E. If an ECM's earth cover meets all construction criteria of Section 6E, it will qualify as a barricade and use of barricaded IMD from the sides or rear of the ECM is permissible. Failure of the ECM's earth cover to meet the criteria of Section 6E will require use of unbarricaded IMD siting purposes.

12.25.2. Barricaded IMD from an AGM. Use of barricaded IMD from an AGM requires that a properly constructed, intervening barricade be located between the ES and the PES. This barricade must meet the construction and location criteria of Section 6E.

Section 12I—HD 1.2 QD Criteria

12.26. HD 1.2.1 and 1.2.2 QD Criteria.

12.26.1. Small quantities of HD 1.2.1 (≤ 450 pounds NEWQD), in certain packaging configurations, will react in a manner more typical of an HD 1.1 event. When located in structures that stop primary fragments, but which generate a secondary debris hazard (e.g. certain ECM and hardened structures), the structural damage and debris hazards produced from these events are more characteristic of an HD 1.1 explosion, rather than the progressive nature of an HD 1.2.1 event. When the NEWQD and the MCE of the packaged HD 1.2.1 items fall within the ranges specified in the equation NEWQD ≤ MCE ≤ 450 lbs (which means that there will only be a single HD 1.2.1 event and it will involve less than or equal to 450 lbs), the HD 1.2.1 will be treated as HD 1.1 and the criteria of paragraph 12.23.1.1 will be used.

12.26.2. The QD criteria for HD 1.2.1 items are based on the hazards from primary fragments and secondary debris. Structures that may contribute secondary debris include: frontal exposures from ECMs; cargo aircraft (with internally loaded AE); all above ground structures, including heavy wall (H), heavy wall/roof (H/R), and light wall (L) as defined in Table 12.2; trucks, trailers, and railcars (with internally loaded AE). All structures are presumed to produce secondary debris unless data or analyses are provided, and approved by AFSC/SEW, to show that the structural debris contribution is less than that shown in Table 12.10. Secondary debris evaluation is not required for externally-loaded AE on aircraft, and stacks of AE on open trucks, trailers, or railcars.

12.26.3. The QD criteria for HD 1.2.2 items are based on the hazards from primary fragments.

12.26.4. Table 12.2 provides a summary matrix of all the paired relationships for HD 1.2.1 and 1.2.2.

12.26.4.1. HD 1.2.1 IBD in the open is given in Table 12.9. When HD 1.2.1 items are stored in structures that may contribute to the debris hazard, the IBD is determined by using the larger of the following two distances: either that given in Table 12.9 for the appropriate Explosive Weight (number of items x NEWQD) or that given in Table 12.10 for the appropriate MCE. (Note: Hazardous debris distance (HDD) specified in Table 12.10 equates to IBD.)

12.26.4.2. HD 1.2.2 IBD is given in Table 12.11.

12.26.4.3. PTRD given in Tables 12.9 through 12.11 give consideration to the transient nature of the exposure in the same manner as for HD 1.1. PTRD is computed as 60% of the IBD for items in this HD, with minimum distances specified in Table 12.2.

12.26.4.4. ILD given in Tables 12.9 through 12.11 take into account the progressive nature of explosions involving these items (normally resulting from fire spread), up to the magnitude of the MCE, and the ability to evacuate personnel from endangered areas before the progression involves large numbers of items. Exposed structures may be extensively damaged by projections and delayed propagation of explosions may occur due to the ignition of combustibles by projections. ILD is computed as 36% of the IBD

for items of this HD, with a minimum distance equal to the IMD given in Table 12.2 for the applicable PES-ES combination.

12.26.4.5. IMD given in Table 12.2 are dependent upon the types of structures acting as both the PES and the ES.

12.27. HD 1.2.3 QD Criteria.

12.27.1. When siting HD 1.2.3, cap the NEWQD of the largest single round at ≤ 450 pounds, and cap the parenthetical fragment distance (xx) at 1300 feet. These caps are for simplicity in siting and may be exceeded with AFSC/SEW approval.

12.27.2. Table 12.2 provides a summary matrix of all the paired relationships for HD 1.2.3.

12.27.2.1. The IBD for HD 1.2.3 is determined using Table 12.12 (HD 1.3 QD) for the NEWQD of the HD 1.2.3 item multiplied by the number of rounds present, but with a minimum IBD determined as follows:

12.27.2.1.1. If the items are in a heavy structure that can interrupt primary fragments and can contribute secondary debris (including side/rear exposures from ECMs), the minimum IBD is the hazardous debris distance given in Table 12.10 for an MCE equal to the NEWQD of the largest single round. A heavy structure is defined as a structure with wall thickness ≥12 inches of reinforced concrete and a roof thickness >5.9 inches of reinforced concrete.

12.27.2.1.2. If the items are in a structure that will not interrupt primary fragments and can contribute to the debris hazard including frontal exposures from unbarricaded ECMs , the minimum IBD applied is the greater of either the debris distance given in Table 12.10. for an MCE equal to the NEWQD of the largest single round or parenthetical (xx) fragment distance assigned to the HD 1.2.3 item to be stored. All structures are assumed to create secondary debris unless data or analyses are provided, and approved by AFSC/SEW, to show that the structural debris contribution is less than that shown in Table 12.10.

12.27.2.1.3. If the items are in the open the minimum IBD is the greatest parenthetical (xx) fragment distance assigned to the HD 1.2.3 item to be stored.

12.27.2.1.4. As an alternative to the criteria in paragraphs 12.27.2.1.1 through 12.27.2.1.3, when an increase in the allowable quantity or a reduction in the required distance will result, HD 1.2.3 AE may be treated as follows:

12.27.2.1.4.1. If the largest single round NEWQD is > 1.6 lbs, consider the items as HD 1.2.1. Use the total NEWQD present, with an MCE equal to the NEWQD of the largest single round to determine the maximum QD.

12.27.2.1.4.2. If the largest single round NEWQD is ≤ than 1.6 lbs, consider the items as HD 1.2.2, based on the total NEWQD present.

12.27.2.2. PTR and IL for HD 1.2.3 are computed as 60% and 36%, respectively, of the determined IBD, with a minimum distance equal to IMD given in Table 12.2.

Section 12J—HD 1.3 QD Criteria

12.28. HD 1.3 QD Criteria. Table 12.3 provides a summary matrix of all the paired relationships for HD 1.3. Table 12.12 provides QD criteria for HD 1.3. HD 1.3 includes items that burn vigorously with little or no possibility of extinguishment in storage situations. Explosions normally will be confined to pressure ruptures of containers and will not produce propagating shock waves or damaging blast overpressure beyond the magazine distance specified in Table 12.12. A severe fire hazard may result from tossing about of burning container materials, propellant, or other flaming debris.

Section 12K—HD 1.4 QD Criteria

12.29. HD 1.4 QD Criteria.

12.29.1. Table 12.3 provides a summary matrix of all the paired relationships for HD 1.4. Table 12.13 provides QD criteria for HD 1.4. HD 1.4 AE present a fire hazard with minimal blast, fragmentation, or toxic hazards.

12.29.2. In mixed storage, the NEWQD of HD 1.4 is not additive (see paragraph 12.7.1.1). However, QD criteria for each HD present, including HD 1.4, must be determined and the largest value will be used.

12.29.3. HD 1.4S AE (see paragraph 2.23) may be stored (including associated handling) without regard to the QD criteria in Table 12.13.

Section 12L—HD 1.6 QD Criteria

12.30. HD 1.6 QD Criteria. Table 12.3 provides a summary matrix of all the paired relationships for HD 1.6. Table 12.14 provides QD criteria for HD 1.6. QD separations for HD 1.6 AE will be based on the storage location and configuration. A maximum of 500,000 lbs NEWQD will be permitted at any one location. Any special storage configuration and siting approved for HD 1.1 AE may be used for storage of like explosive weights of HD 1.6 AE.

Section 12M—HD 6.1 Criteria

12.31. HD 6.1 Criteria.

12.31.1. HD 6.1 includes items that contain only toxic chemical or riot control agents. AE containing both explosives and toxic chemical or riot control agents may be hazard classified as HD 1.1 through HD 1.4, based on testing in accordance with Title 49 Code of Federal Regulations, Parts 171 to 177, *Shippers-General Requirements for Shipments and Packaging*.

12.31.2. Hazard zones for toxic chemical agents are determined by the relative toxicity of the agents, the amount released to the atmosphere and the rate at which they are released (that is, evaporation, pressure, or explosive dispersal), terrain features, and meteorological conditions. Hazard zone calculations are based on MCE, using DDESB TP 10, *Methodology for Chemical Hazard Prediction*.

12.31.3. When siting AE containing toxic chemical agents, both the explosives and toxic chemical agent hazards will be evaluated with the greatest QD governing siting.

Section 12N—Energetic Liquids QD Criteria

12.32. Scope and Application.

12.32.1. This section applies to the storage of energetic liquids, listed in Table 12.15, in all types of containers, including rocket and missile tankage. Laboratory quantities will be stored and handled as prescribed in Chapter 5 of AFOSH Standard 91-38, *Hydrocarbon Fuels--General*. (Note: The required QD are only based on the energetic liquids' energetic reaction–that is, blast overpressure and container fragmentation. These QD requirements do not consider the toxicity or potential down-wind hazard. Therefore, QD may not be the only factor that needs to be considered when selecting a location for storage and operations of energetic liquids.)

12.32.2. **Exclusion.** This section does not govern the storage or handling of energetic liquids for uses other than in space launch vehicles, rockets, missiles, associated static test apparatus, and AE.

12.33. Concept.

12.33.1. These QD standards were developed on the premise that construction materials are compatible with energetic liquids, facilities are of appropriate design, fire protection and drainage control techniques are employed, and other specialized controls (e.g., nitrogen padding, blanketing, and tank cooling) are used, when required.

12.33.2. When additional hazards associated with AE are involved, the safety distances prescribed in other sections of this standard will be applied, as required.

12.33.3. These standards are based upon the estimated credible damage resulting from an incident, without considering probabilities or frequency of occurrence.

12.34. Determination of Energetic Liquids Quantity.

12.34.1. The total quantity of energetic liquids in a tank, drum, cylinder, or other container will be the net weight of the energetic liquids contained therein. Quantity of energetic liquids in the associated piping must be included to the points that positive means are provided for interrupting the flow through the pipe, or interrupting a reaction in the pipe in the event of an incident.

12.34.2. When the quantities of energetic liquids are given in gallons, the conversion factors given in Table 12.16 may be used to determine the quantity in pounds.

12.35. Measurement of Separation Distances.

12.35.1. Measure from the closest controlling hazard source (e.g., containers, buildings, segment, or positive cutoff point in piping).

12.35.2. Measure from the nearest container or controlling sub-division, when buildings containing a small number of cylinders or drums are present or when quantities of energetic liquids are subdivided effectively.

12.36. Hazard Classification of Energetic Liquids.

12.36.1. The main UN hazard classification designators for energetic liquids are indicated below. (Note: The original liquid propellant Hazard Groups I - IV and CG A - F are no longer used.)

12.36.1.1. **Class 1:** Explosives.

12.36.1.2. **Class 2:** Compressed or liquefied gases.

12.36.1.3. **Class 3:** Flammable liquids.

12.36.1.4. **Class 4:** Flammable solids and self-reactive materials.

12.36.1.5. **Class 5:** Oxidizers.

12.36.1.6. **Class 6:** Toxic or infectious substances.

12.36.1.7. **Class 8:** Corrosive.

12.36.1.8. **Class 9:** Miscellaneous.

12.36.2. Because two energetic liquids might each be compatible with certain explosive AE stores, but incompatible with each other, a two-part compatibility group designation is assigned to an energetic liquid. (Note: The design and logistics of modern weapons sometimes require that consideration be given to permitting storage or operations involving energetic liquids in a storage structure containing solid explosives. For example, it may be necessary to store hydrocarbon-fueled cruise missiles having high explosive warheads with fueled configurations not containing explosive warheads. Another example is the storage of liquid gun propellant with explosive AE components.)

12.36.2.1. The first element is the standard storage and transportation CG designation. The alpha designations are the same as the CG designations for UN Class 1 as given in Chapter 3. However, for storage and handling on DoD facilities, a CG may also be assigned to an energetic liquid in a Class other than Class 1. The absence of a CG indicates incompatibility with solid explosives.

12.36.2.2. The second element is a new Energetic Liquid Compatibility Group (ELCG) designation. The ELCG applies to mixed storage of energetic liquids or AE containing energetic liquids. The ELCG is specified in parentheses as the last element of the hazard classification. The ELCG designations and definitions are:

12.36.2.2.1. **LA:** Energetic liquids that are strong oxidizers, mainly of acidic character. These materials may cause or contribute to the combustion of other material, possibly resulting in serious flare fires or explosions. Includes, but is not limited to, nitrogen tetroxide and mixed oxides of nitrogen (MON), inhibited red fuming nitric acid (IRFNA), liquid oxygen (LO_2), hydrogen peroxide (H_2O_2), and gels, slurries, or emulsions of the above.

12.36.2.2.2. **LB:** Energetic liquids that are readily combustible when exposed to, or ignited in the presence of an oxidizing agent, but that are not strong reducing agents. Some may be hypergolic with group LA materials. Includes, but is not limited to, hydrocarbons such as kerosene's and strained ring ramjet fuels; liquid hydrogen (LH_2); and gels, slurries, or emulsions of the above.

12.36.2.2.3. **LC:** Energetic liquids that are readily combustible when exposed to, or ignited in the presence of an oxidizing agent, and are also strong reducing agents. These will likely be hypergolic with group LA substances. Includes, but is not limited to, hydrazine's and other amines; and gels, slurries, or emulsions of the above.

12.36.2.2.4. **LD:** Energetic liquids that act mainly as combustible fuels, similar to groups LB and LC, when exposed to, or ignited in the presence of oxidizing agents but that may act as oxidizers in some combinations. They may be a monopropellant with the right catalyst, or may be pyrophoric and ignite upon release to the atmosphere. Examples are ethylene and propylene oxides, and boranes.

12.36.2.2.5. **LE:** Energetic liquids having characteristics that do not permit storage with any other energetic liquid. They may react adversely with either fuels (reducing agents) or oxidizers. Examples are nitromethane, nitrate ester based formulations such as Otto Fuel II, liquid monopropellants containing hydroxyl ammonium nitrate (HAN), halogen fluorides (ClF_3 and ClF_5) and fluorine, and gels, slurries, or emulsions of the above.

12.36.2.3. Mixing of energetic liquids.

12.36.2.3.1. Different energetic liquids in the same ELCG may be stored together.

12.36.2.3.2. ELCG-LE may not be mixed with other ELCG or dissimilar ELCG-LE.

12.36.2.3.3. Mixed storage is prohibited between energetic liquids of different ELCG designations with one exception.

12.36.2.3.3.1. ELCG-LB and -LC should not be stored together, particularly when the majority of the material stored is ELCG-LB; however, mixed storage of ELCG-LB and -LC is permitted when operationally necessary.

12.36.2.4. As an example, for the 1.3C(LE) hazard classification for HAN-based liquid gun propellant XM-46:

12.36.2.4.1. "C": indicates the propellant can be stored in the same magazine with CG-C solid propellants. Because CG-C and CG-D can be mixed, CG-D high explosive projectiles could also be stored with the energetic liquid gun propellant.

12.36.2.4.2. "LE": indicates that hydrocarbon fuels (e.g., JP-10), which is an ELCG-LB, would not be permitted in this storage scenario, because its ELCG-LB indicates incompatibility with ELCG-LE.

12.36.3. Complete DoD hazard classification assignments for current energetic liquids are shown in Table 12.15. (Note: Conversions for gallons of energetic liquids to pounds is provided in Table 12.16.)

12.36.4. Each new energetic liquid, or new non-bulk packaging configuration of an energetic liquid, developed or adopted for DoD use, must be examined and assigned a hazard classification per Technical Bulletin 700-2, Naval Sea Systems Command Instruction 8020.8B, T.O. 11A-1-47, Defense Logistics Agency Regulations 8220.1, and Department of Defense Ammunitions and Explosives Hazard Classification Procedures. The MAJCOM developing a liquid propellant (or first adopting for use any liquid propellant not listed here) must recommend the hazard classification and compatibility group designation. The

responsible MAJCOM will forward substantiated proposals for such assignments as soon as systems application planning allows or warrants to AFSC/SEW.

12.36.5. A different minimum distance may be assigned during the hazard classification process when the hazards of a particular new packaging configuration are not adequately addressed. This distance will be indicated parenthetically, in hundreds of feet, as the first element of the hazard classification. For example, if a new liquid oxidizer pressure vessel configuration is hazard classified as (04)2.2(LA), then a minimum distance of 400 ft would apply for IBD and PTRD, otherwise the prescribed liquid oxidizer QD criteria would apply.

12.36.6. **Specific hazardous locations.** The predominant hazard of the individual energetic liquids at specific hazardous locations can vary depending upon the location of the energetic liquid storage and the operations involved. These locations are listed below in the order of decreasing hazards.

12.36.6.1. **Launch pads.** Operations at these facilities are very hazardous because of the proximity of fuel and oxidizer to each other, the frequency of launchings, lack of restraint of the vehicle after liftoff, and the possibility of fallback with resultant dynamic mixing on impact. To compute the explosive equivalent for the launch pad, use Table 12.17 with the combined energetic liquids weight in the launch vehicle tanks and any energetic liquids in piping that are subject to mixing, except as indicated in paragraph 12.36.8.

12.36.6.2. **Static test stands.** Operations at these facilities are less hazardous because test items are restrained and subject to better control than launch vehicles. As with launch pads, the proximity of fuel and oxidizer presents a significant hazard. To reduce this hazard, tankage should be separated and remotely located from the static test stand. Explosive equivalents of Table 12.17 will be used, with the combined energetic liquids weight subject to mixing as determined by hazard analysis. The amount of energetic liquids held in run tanks can be excluded from consideration if the test stand meets all the following criteria, if applicable:

12.36.6.2.1. All tanks are American Society of Mechanical Engineers (ASME) certified in accordance with Wilton, C., "Investigation of the Explosive Potential of the Hybrid Propellant Combinations N_2O_4/PBAN and CTF/PBAN," AFRPL-TR-67-124, 1967 and maintained per ASME Code, section VIII, division 1 or division 2.

12.36.6.2.2. For cryogenic propellants, all tanks are constructed with double wall jacketing.

12.36.6.2.3. Run tankage is protected from fragments produced by an engine malfunction.

12.36.6.2.4. Both the fuel and oxidizer lines contain two (redundant), remotely operated valves to shut off flow in the event of a malfunction.

12.36.7. **Ready storage.** This storage is relatively close to the launch and static test stands; normally it is not involved directly in feeding the engine as in the case with run tankage, which is an integral part of all launch and test stand operations. The explosive equivalents of Table 12.17 will be used with the combined energetic liquids weight subject to mixing if the facility design does not guarantee against fuel and oxidizer mixing and against detonation propagation to, or initiation at, the ready storage facility when a mishap occurs at the test

stand, on the ground at the launch pad, or at the ready storage areas. Otherwise, fire and fragment hazards will govern (Tables 12.15, 12.18, 12.19, 12.20, and 12.21).

12.36.8. **Cold-flow test operations.** Fire and fragment hazards govern (Tables 12.15, 12.18, 12.19, 12.20, and 12.21) if the design is such that the system is closed except for approved venting, is completely airtight, fuel and oxidizer never are employed concurrently, and each has a completely separate isolated system and fitting types to preclude intermixing, and the energetic liquids are of required purity. Otherwise, explosive equivalents (Table 12.17) will be used with the combined energetic liquids weight.

12.36.9. **Bulk storage.** This is the most remote storage with respect to launch and test operations. It consists of the area, tanks, and other containers therein, used to hold energetic liquids for supplying ready storage and, indirectly, run tankage where no ready storage is available. Fire and fragment hazards govern (Tables 12.15, 12.18, 12.19, 12.20, and 12.21) except in special cases as indicated in Tables 12.15 and 12.17.

12.36.10. **Rest storage.** This is temporary-type storage and most closely resembles bulk storage. It is a temporary parking location for barges, trailers, tank cars, and portable hold tanks used for topping operations when these units actually are not engaged in the operation; and for such vehicles when they are unable to empty their cargo promptly into the intended storage container. Fire and fragment hazards govern (Tables 12.15, 12.18, 12.19, 12.20, and 12.21) except in special cases as indicated in Tables 12.15 and 12.17. The transporter becomes a part of that storage to which it is connected during energetic liquids transfer.

12.36.11. **Run tankage (operating tankage).** This consists of the tank and other containers and associated piping used to hold the energetic liquids for direct feeding into the engine or device during operation. The contents of properly separated "run tanks" (operating tankage) and piping are normally considered on the basis of the pertinent hazards for the materials involved, except for quantities of incompatible materials that are or can be in a position to become mixed. Explosive equivalents will be used (Table 12.17) for quantities of such materials subject to mixing unless provisions of paragraphs 12.36.6.2.1 through 12.36.6.2.4 are satisfied.

12.36.12. **Pipelines.** A 25-ft clear zone to inhabited buildings will be maintained, as a minimum, on each side of pipelines used for energetic liquids (excluding flammable or combustible liquids that exhibit normal fire hazards such as RP-1, JP-10, and Otto Fuel II). Tables 12.15, 12.19, 12.20, and 12.21 apply, as appropriate.

12.37. QD Standards. Since many energetic liquids are not classified as UN Class 1 explosives, conventional QD storage criteria do not generally apply to these materials. At the same time, the (non-Class 1) UN transportation hazard classifications for many energetic liquids appear to be inappropriate or inadequate for application to storage safety (based on available accident and test data). For example, hydrazine has a UN hazard classification of 8 (corrosive), while it also is subject to dangerous fire and explosive behavior. Thus, the implementation of QD criteria for energetic liquids is based on an independent determination of the predominant hazard presented by the material in the storage environment. The following standards are applicable to energetic liquids used for propulsion or operation of missiles, rockets, and other related devices.

12.37.1. Tables 12.15, 12.18, 12.19, 12.20, and 12.21 provide minimum distance requirements for storage of bulk quantities, and in some cases, pressure vessels and other commercial packaging of energetic liquids. In general, the minimum distance required by the material requiring the greatest distance will separate storage of different energetic liquids. In addition, positive measures will be taken to control the flow of energetic liquids in the event of a leak or spill, in order to prevent possible fire propagation or accumulation of flammable liquids near other storage, and to prevent mixing of incompatible energetic liquids (except for specific hazardous locations as identified in paragraph 12.36.6 above). Explosives equivalence applies for some materials as indicated in Tables 12.15 and 12.17. Fragment hazards govern for some materials in certain packaging configurations. For the more conventional fuels and oxidizers, and also where minimum blast and fragment criteria are not required due to low confinement packaging, QD standards are adopted from Occupational Safety and Health Administration (OSHA) and NFPA guidelines to account for normal fire protection principles.

12.37.2. For specific hazardous locations as defined in paragraph 12.36.6 above, explosives equivalency may apply. If so, consult Tables 12.15 and 12.17 with the combined energetic liquids weight subject to mixing and use distances found in Table 12.6 or 12.8. Enter weight of explosives equivalent in Table 12.6 or 12.8. QD standards for other conditions and explosive equivalents for any combination not contained in Table 12.15 or 12.17 will be determined by AFSC.

12.38. Contaminated Energetic Liquids.

12.38.1. Caution will be exercised in the storage and handling of contaminated energetic liquids. Such contamination may increase the degree of hazard associated with the energetic liquids.

12.38.2. Energetic liquids known to be contaminated or in a suspect condition will be isolated and provided separate storage from all other energetic liquids pending laboratory analysis for verification of contamination and disposition requirements, if any.

Section 12O—QD Criteria Specific Facilities and Systems

12.39. General Airfield Criteria.

12.39.1. **Airfield Criteria.** Reference Unified Facilities Criteria 3-260-01, *Airfield and Heliport Planning and Design* and AFH 32-1084, *Facility Requirements* for minimum airfield criteria for parked explosives-loaded aircraft. If airfield criteria deviations are required, address the status of the deviations in the ESP transmittal letter.

12.39.2. **Forward Firing Munitions.** Weapon systems such as guns, rockets, missiles, and flare dispensers pose an additional hazard (beyond their explosives hazard) because of their directional response and potential long range if inadvertently activated on the ground. QD requirements do not address this additional hazard. Comply with the following to minimize this additional hazard:

12.39.2.1. Position aircraft to present the minimum hazard to personnel and resources in the event of a mishap.

12.39.2.2. Do not unnecessarily stand or park vehicles in front of, or behind, these munitions when power is applied to the aircraft.

12.39.2.3. Comply with AFI 91-101, *Air Force Nuclear Weapons Surety Program* for PNAF missions.

12.39.3. **AE Prohibited Areas.** Areas immediately beyond the ends of runways and along primary flight paths are subject to more aircraft accidents than other areas. For this reason, AE is prohibited from Accident Potential Zones (APZ) I and II and clear zones (CZ) of all aircraft landing facilities as depicted and described in UFC 3-260-01, *Airfield and Heliport Planning and Design* and defined by the MAJCOM's.

12.39.3.1. Deviations to AE prohibited areas will be accomplished through risk acceptance documentation according to paragraph 1.4. ESP submittals must reference the approved airfield waiver as supporting justification for the deviation.

12.39.3.1. **(ACC)** Site explosives locations within prohibited areas as a last resort with HQ ACC/SEW concurrence.

12.39.4. **Munitions Loading Operations.** Uploading and downloading of munitions will be conducted at sited explosives-loaded aircraft parking areas (see paragraph 12.47).

12.40. Combat Aircraft Related Activities.

12.40.1. All facilities and functions directly involved in maintaining, servicing, controlling, and flying combat aircraft are considered related to AE on the flight line supporting those combat aircraft and may be sited at ILD from such AE (subject to minimum separation distances from HASs as specified in paragraph 12.51.13. and to guidance given in para 12.40.5). The primary test to be applied in determining combat aircraft related facilities is that the function must provide essential daily and direct support for the PES presenting the hazard. Examples of facilities and functions generally considered related to combat aircraft generation include:

12.40.1.1. Facilities that handle AE on the flight line, prepare and service armed aircraft, and those that house personnel who fly combat aircraft (e.g., alert crew shelters).

12.40.1.2. Direct flight line combat aircraft associated facilities, which may contain field offices, break rooms, unit training rooms, and equipment and supply rooms.

12.40.1.3. Maintenance Group and Operations Group functions.

12.40.1.4. POL or LOX servicing facilities, including hot pit refueling areas.

12.40.1.5. Civil engineering functions solely dedicated to maintaining the runway and taxiways.

12.40.1.6. Forward supply points.

12.40.1.7. Intelligence, debriefing, and flightline security functions.

12.40.2. Because combat aircraft generation cannot progress without their combined efforts, combat aircraft support functions and facilities involving explosives may be considered related to each other, if they are considered related to the combat aircraft. Therefore, all explosives support functions and facilities deemed related to combat aircraft generation

activities on the flight line may be located at ILD from one another (subject to minimum separation distances from HASs as specified in paragraph 12.51.13).

12.40.3. Combat aircraft related facilities must be separated from any PES they are not related to by IBD, with no minimum fragment distance. If combat aircraft related facilities are located in a HAS, this separation from unrelated PESs may be reduced to K30 to the frontal cone and K9 or K18 to the sides or rear. Some hardened facilities may be sited at lesser distances if equivalent protection is demonstrated by test or analysis and approved by AFSC/SEW.

12.40.4. Other flight line facilities or activities which do not directly support combat aircraft generation will be separated by IBD, with no minimum fragment distance, from combat aircraft and their related explosives operations.

12.40.5. Typical munitions storage area explosives operations located on the flight line (e.g. bomb build-up) may be considered related to combat aircraft, but are not necessarily related to other combat aircraft related facilities or flight line support functions (e.g. wheel and tire shop).

12.40.6. Flightline Dining Facilities. IBD with a minimum fragment distance from all PES locations is required whenever access to the dining facility is available to personnel who do not directly support flightline activities. IBD with no minimum fragment distance from MSA PES locations provided the dining facility is used exclusively by flight line personnel. ILD from flight line PES locations provided the dining facility is used by personnel who directly support flight line activities.

12.41. Explosives Cargo Aircraft Related Activities.

12.41.1. Flight line personnel who solely support explosives cargo aircraft and all munitions maintenance activities are considered related to explosives cargo and explosives cargo aircraft and may be separated at ILD from such AE.

12.41.2. Explosives cargo aircraft support functions and facilities involving explosives may be considered related to each other, if they are consider related to explosives cargo aircraft. Therefore, all explosives support functions and facilities deemed related to explosives cargo aircraft activities on the flight line may be located at ILD from one another.

12.41.3. Explosives cargo aircraft related facilities must be separated from any PES they are not related to by IBD, with no minimum fragment distance.

12.41.4. Other flight line facilities or activities which do not directly support explosives cargo aircraft operations and maintenance will be separated by IBD, with no minimum fragment distance, from explosives cargo aircraft.

12.41.5. Typical munitions storage area explosives operations located on the flight line may be considered related to explosives cargo aircraft, but are not necessarily related to other explosives cargo aircraft related facilities or flight line support functions.

12.42. Munitions or Weapons Storage Area Related Activities.

12.42.1. Activities directly associated with munitions storage or munitions operations are considered related to munitions storage area AE and may be separated at ILD from such AE.

12.42.2. Munitions support functions and facilities involving explosives may be considered related to each other (regardless of owning service, organization or country), if they are related to munitions storage area AE.

12.42.3. Munitions storage area related facilities must be separated from any PES they are not related to by IBD, with no minimum fragment distance (e.g., the munitions storage area office from a combat aircraft parking area). However, explosives operating locations may be protected by ILD from combat aircraft.

12.43. Concurrent Servicing Operations. CSO using live munitions will be conducted in sited CAPA locations. Identify inert CSO locations as ESs when they are located within a clearzone.

12.44. Hot-Pit Refueling Operations. All aircraft undergoing hot-pit refueling are considered to be in transportation mode and are exempt from QD criteria as a PES. The hot-pit refueling area and associated aircraft will be evaluated as an ES; apply the greater separation treating the location as a military use only taxiway or separation required for the POL. (See **paragraph 12.81** for QD requirements for the POL facilities associated with the hot-pit refueling area.)

12.45. End-of-Runway and Arm/De-arm Pads and Crew Shelters. All aircraft undergoing end-of-runway or arm/de-arm operations are considered to be in transportation mode and are exempt from QD criteria as a PES. End-of-runway and arm/de-arm crew shelters will be sited as military use only runways per Tables 12.1, 12.2, and 12.3. If these shelters are used as office areas for arm/de-arm crews, they must be sited at IBD, with no minimum fragment distance, from munition storage area PESs, and ILD from flight line PESs.

12.46. Aircraft NEWQD. Exclude the following AE when determining the NEWQD of explosives loaded aircraft: AE installed on aircraft (e.g., egress system components, squibs, and detonators for jettisoning external stores, enginestarter cartridges, fire extinguisher cartridges, and destructors in electronic equipment), contained in survival and rescue kits (e.g., flares, signals, explosives components of emergency equipment), and other such items or materials necessary for safe flight operations.

12.47. Explosives Aircraft Exempt from Siting as a PES. Aircraft configured with the items listed below are exempt from QD site planning requirements when evaluated as a PES; they must still be sited as ESs. This does not include AE carried as cargo. Park in a designated aircraft parking area meeting airfield criteria and treat the aircraft as explosives-loaded in all other respects. The following munitions can be uploaded and downloaded at the designated aircraft parking area provided that the quantity of munitions being loaded or unloaded is limited to a single aircraft load. Munitions delivery trailers (i.e., UALS, BDU, flare & chaff mods, captive-carry missiles) are considered in the transportation mode (QD-exempt) provided the trailers do not remain at the designated aircraft parking area longer than the loading or unloading operation being conducted.

12.47.1. HD 1.2.2 gun ammunition, 30 mm or less.

12.47.2. HD 1.3 installed aircraft defensive flares. Externally loaded munitions such as LUU-1/2 flares and 2.75" training rockets require QD.

12.47.3. HD 1.4 munitions (i.e., chaff squibs, captive-carry training missiles, BDU-33s).

12.47.4. Installed explosives necessary for safe flight operations per paragraph 12.46. See glossary and T.O. 11A-1-33 for further information.

12.48. Deleted.

12.49. Other Aircraft Configurations.

12.49.1. For F-15 and F-16 aircraft in the open with AIM/AGM series missile configurations as shown in Figures 12.4 and 12.5, use Table 12.1 to determine the type of QD separation required for exposed sites and use Figures 12.4 and 12.5 to determine the actual QD separation distances. (Note: These distances are not reduced QD separations; they are only provided to simplify determination of required QD separations for standard aircraft configurations.) For aircraft in a structure, building debris criteria must be considered in accordance with paragraph 12.23.1.1.5 or 12.23.1.1.6. Exception: Aircraft in fabric or tubular shelters or light metal structures (e.g. butler building), apply the criteria above for aircraft in the open. Other aircraft configurations with mixed missile loads may be requested through MAJCOM/SEW.

12.49.2. Internally loaded aircraft, e.g. F-117 and F/A-22, produce secondary debris; therefore, building debris criteria must be considered.

12.50. Reduced MCEs for F-15 and F-16 Aircraft with AIM Series Missiles. Testing and analysis have demonstrated an allowable reduction in MCE and QD for some F-15 and F-16 configurations. Use of these reductions is only allowed if no single trailer servicing the aircraft would present an MCE greater than the MCE used to generate the aircraft QD arcs. In most cases, this means that the trailer cannot be loaded with more than the MCE of missiles. Where test results permit, such as in the case of a single layer of AIM-120 missiles loaded in alternating directions on a single trailer, reduced trailer MCEs may be applied. In that specific case, the trailer MCE is a single AIM-120 missile. For F-15 and F-16 aircraft in the open with AIM series missile configurations as shown in Figures 12.6 and 12.7, use Table 12.1 to determine the type of QD separation required for exposed sites and use the following to determine actual QD separation distances:

12.50.1. For F-15 aircraft in the open, see Figure 12.6.

12.50.2. For F-16 aircraft in the open, see Figure 12.7.

12.50.3. For F-15 and F-16 aircraft in fabric or tubular shelters or light metal structures (e.g. butler building), apply the criteria above for aircraft in the open.

12.50.4. For any other type of structure, building debris criteria must be considered in accordance with paragraph 12.23.1.1.5 or 12.23.1.1.6.

12.51. Hardened Aircraft Shelters (HAS) and Associated AE Facilities.

12.51.1. All HAS, except Korean TAB VEE HAS fronts and Korean Flow-Through HAS fronts and rears, are structures capable of stopping primary fragments when doors are properly secured. HD 1.1 and HD 1.2.3 parenthetical (xx) fragment distances do not apply except out the front of a Korean TAB VEE and out the front or rear of a Korean Flow-Through HAS.

12.51.2. HAS will be separated according to Table 12.23 which provides IMD (or equivalent) protection. For First, Second, and Third Generation HAS, and Korean TAB VEE Modified (with hardened front closure) HAS, these distances will also provide a high degree of protection against delayed propagation of explosion when HAS doors are properly secured. However, the exposed shelter may be damaged heavily and aircraft and AE within

may be rendered unserviceable. For Korean TAB VEE HAS front, and Korean Flow-Through HAS front or rear (due to openings) at these distances there may be serious damage to aircraft and possible delayed propagation of detonation due to fragments, debris, or fire.

12.51.3. HAS separated according to Table 12.24 (and with HAS doors properly secured) will be provided a higher degree of asset preservation (K30 or equivalent overpressure) than those provided in Table 12.23. An explosion in one shelter or ready storage facility may destroy it and its contents, but aircraft within adjacent shelters will be undamaged provided the doors are closed. These aircraft may not be immediately accessible due to debris.

12.51.4. Table 12.23 and Table 12.24 criteria are based on First, Second, and Third Generation HAS doors remaining closed, except for:

12.51.4.1. Aircraft towing, fueling, servicing, run up, or taxi.

12.51.4.2. During CSO or short periods when maintenance equipment or munitions are being moved into or out of shelters. If doors are left open for extended periods, apply the following criteria:

12.51.4.2.1. For prevention of simultaneous detonation, apply default IMD to or from an open front. A HAS arch or rear wall may be considered as a barricade for application of K6. No reduction from K11 is allowed between “open door” HAS front-to-front exposures.

12.51.4.2.2. For aircraft survivability, apply Table 12.22 to or from an open front.

12.51.5. First Generation and Korean TAB VEE HAS are limited to a maximum NEWQD of 5,863 lbs [2,659.4 kg]. Second Generation, Third Generation, and Korean Flow-Through HAS are limited to a maximum NEWQD of 11,000 lbs [4,989.5 kg]. Note: W/WS3 HASs are limited to 10,000 lbs IAW AFI 91-112, *Safety Rules for US/NATO Strike Fighters*. Flow-Through HAS Pairs are limited to a maximum NEWQD of 4,800 lbs [2,177.2 kg] in each HAS. HAS Pairs with rear walls or with front and rear walls are limited to a maximum NEWQD of 2,390 lbs [1,084.1 kg] in each HAS. HAS Ready Service ECMs/AGMs are limited to a maximum NEWQD of 22,000 lbs [9,979 kg].

12.51.6. Use separation distances of Table 12.25A for separation of unhardened ES from Third Generation HAS, provided the NEWQD limitation of paragraph 12.51.5. Lesser distances may be permitted to hardened ES that provide equivalent protection, when approved by DDESB.

12.51.7. Apply Table 12.25A for separation of unhardened ES from Second Generation and Korean Flow-Through HAS as follows, provided the NEWQD limitations of paragraph 12.51.5. are met:

12.51.7.1. To the front, sides, and rear of Second Generation HAS.

12.51.7.2. To the sides of a Korean Flow-Through HAS. For the front and rear, apply default QD criteria.

12.51.8. Apply Table 12.25B for separation of unhardened ES from First Generation and Korean TAB VEE HAS as follows, provided the NEWQD limitations of paragraph 12.51.5. are met:

12.51.8.1. To the front, sides, and rear of First Generation HAS.

12.51.8.2. To the sides and rear of a Korean TAB VEE HAS. For the front, apply default QD criteria.

12.51.9. Apply Tables 12.25A or 12.25B for separation of unhardened ES from HAS Pairs, as appropriate, for the HAS Pair design involved.

12.51.10. First Generation, Second Generation, Third Generation and Korean TAB VEE HAS sited for HD 1.2, HD 1.3, or HD 1.4 explosives, as shown below, do not generate a QD clear zone out the sides or rear. Korean Flow-Through HAS sited for HD 1.2, HD 1.3, or HD 1.4 explosives, as shown below, do not generate a QD clear zone out the sides. For HAS pairs, apply the requirements for the HAS Pair design involved. Default QD criteria apply out the front of all HAS, and out the front and rear of Korean Flow-Through HAS.

12.51.10.1. HD 1.2.1, with an MCE less than 110 lbs [50 kg], and an NEWQD subject to the limitations in paragraph 12.51.5.

12.51.10.2. Mission essential quantities of HD 1.2.2.

12.51.10.3. HD 1.2.3, with a largest single round NEWQD less than 110 lbs [50 kg] and an NEWQD subject to the limitations in paragraph 12.51.5.

12.51.10.4. Mission essential quantities of HD 1.3.

12.51.10.5. Mission essential quantities of HD 1.4.

12.51.11. A HAS used solely as a maintenance facility would normally be classified as a related facility and would require ILD separation from a supported PES (except as permitted for a licensed facility or parking of explosives-loaded aircraft exempt from siting as a PES). As an ES, a First, Second, or Third Generation Maintenance HAS will provide K30 equivalent protection at the reduced distances shown in Table 12.24 with doors properly secured. If Table 12.24 is not applied for aircraft survivability, then at a minimum, ILD equivalent protection (3.5 psi) will be provided to personnel within the maintenance HAS.

12.51.12. The front, side, or rear sectors of a HAS, as either a PES or an ES, are illustrated in Figure 12.3.

12.51.13. Locate occupied, unhardened facilities no closer to a HAS than those distances given in tables 12.25A or 12.25B.

12.52. Weapons Storage Vaults in Hardened Aircraft Shelters. The special weapon contents of a weapons storage vault (WSV) will not contribute to an explosion in a HAS if certain separations are maintained. The explosives in the WSV need not be considered when computing the NEWQD of the HAS if the presence and location of conventional munitions in the HAS correctly conform to what is allowed by the applicable weapons system safety rules (WSSRs), AFI 91-112. Table 12.23 provides minimum separation distances for HASs containing WSVs from all other HASs, with or without WSVs.

12.53. Revetments.

12.53.1. A connected series of such revetments meeting the requirements of Section 6F may be sited for the explosives weight of one revetment.

12.53.2. Site flight line revetment sets for combat aircraft parking and loading as a combat aircraft parking area according to Tables 12.1, 12.2 and 12.3. These revetment sets may be

used for both aircraft parking and munitions holding. Aircraft in revetments will only be afforded equivalent IMD separation. Per Table 12.1, Note 14, two aircraft may be placed in a revetted cell at less than IMD without obtaining commander approval; the NEWQD of the two aircraft must be totaled for determining QD separations to other exposures.

12.53.3. Site flight line revetment sets used for munitions as flight line munitions holding areas according to Tables 12.1, 12.2 and 12.3.

12.53.4. Site revetment sets used solely for the storage of munitions as AGMs according to Tables 12.1, 12.2 and 12.3.

12.54. Aircraft Battle Damage Repair Sites. The maximum NEWQD charge permitted is 2 ounces of HD 1.1. When using sandbags to cover charges and prevent fragment escape, a 300 ft clear zone is required. For un-sandbagged charges, a 500 ft clear zone is necessary.

12.55. Helicopter Landing Areas for AE Operations. Helicopter landing areas for loading and unloading AE within storage sites and quick reaction alert sites will be considered AGM and may be sited at IMD based only upon the NEWQD carried by the helicopter. Such helicopter landing areas will meet the following requirements:

12.55.1. Flight clearance criteria are met.

12.55.2. Landing and takeoff approaches will not be over any AE facilities.

12.55.3. Helicopter operations are to be limited to AE support of the facilities concerned.

12.55.4. Carrying of passengers is not permitted.

12.55.5. During helicopter takeoff, landing, or loading or unloading, AE operations will not be conducted at any PES located within IBD of the helicopter landing area. During landing or takeoff, PES doors will be closed.

12.55.6. Safety precautions normal to other modes of transportation are to be observed.

12.56. Defensive or Tactical Missile Batteries. The following criteria apply to deployed defensive or tactical missile batteries (e.g., Patriot missiles) and associated support functions.

12.56.1. No separation is required between missile batteries and the security force structures exclusively supporting them.

12.56.2. Those manned functions solely providing support to defensive missile units, such as motor pools, may be sited at ILD from the missile battery and other PESs in the explosives clear zone in which they are deployed. Barricaded ILD may be applied per paragraph 12.18.2.1.

12.56.3. Site missile batteries as AGMs to other PESs in the explosives clear zone in which they are deployed. They may be treated as Flight line Munitions Holding Areas to aircraft in the explosives clear zone in which they are deployed. No separation is required to military use only runways and taxiways.

12.56.4. Missile batteries deployed within the IBD of AE storage areas may be sited at ILD to manned functions considered related to area AE operations. Likewise, missile batteries deployed in the clear zones of flight line operations may be sited at ILD to manned flight line facilities.

12.57. Tactical Missile Separations.

12.57.1. AIM-7 Missiles (Other than WAU-17 Warhead).

12.57.1.1. When these conditions are met MCE is limited to a single AIM-7 warhead with an HD of (02)1.1.

12.57.1.1.1. Separate warheads of adjacent AIM-7 missiles by 5 inches or more.

12.57.1.1.2. Separate AIM-7 warheads from all AIM-9 warheads by at least 22 inches, or ensure warheads are not radially aligned.

12.57.1.2. See Table 12.5 for HFD for missiles at less than 5 inches from each other, if they are in the open or in a light structure which cannot stop primary fragments (see legend to Table 12.2).

12.57.1.3. Containers. All missiles in an all up round container (AURC) will sympathetically detonate, therefore the MCE is all four warheads in the AURC. AIM-7 missiles that explode in an AURC will not propagate to warheads in adjacent containers, either vertically or horizontally. MCE is limited to four warheads.

12.57.1.4. In an ECM, the following configurations allow a reduced MCE:

12.57.1.4.1. Packed in AURC, the MCE is four warheads.

12.57.1.4.2. For trailers, with or without other AIM-7 (not WAU-17) or AIM-9 missiles, the MCE is the total quantity of all warheads radially aligned and at less than 100 inches from each other.

12.57.2. AIM-7 Missiles (WAU-17 Warhead).

12.57.2.1. These warheads can sympathetically detonate other HD 1.1 explosives in radial alignment of the warhead. Use radial aligned separation distance of 100 inches or more to prevent propagation of one warhead to another.

12.57.2.2. See Table 12.5 for HFD for missiles in radial alignment and at less than 100 inches from each other, if they are in the open or in a light structure which cannot stop primary fragments (see legend to Table 12.2).

12.57.2.3. Containers. All missiles in an AURC will sympathetically detonate, therefore the MCE is all four warheads in the AURC (36 lbs x 4 or 144 lbs). Detonation of warheads in an AURC will not transfer to adjacent containers side-by-side, but containers within a single vertical stack must be alternated, nose-to-tail, to prevent propagation vertically. MCE would then be four warheads.

12.57.2.4. In an ECM, the following configurations allow a reduced MCE:

12.57.2.4.1. For alternately stack containers (per paragraph 12.57.2.3) and trailers not in radial alignment, the MCE is four warheads.

12.57.2.4.2. For alternately stack containers (per paragraph 12.57.2.3) and no more than three trailers in radial alignment, the MCE is twelve warheads.

12.57.2.5. For ECM storage other than that described in paragraph 12.57.2.4, and storage in all other heavy structures capable of stopping primary fragments (see legend to Table

12.2), MCE is the total number of warheads in the structure unless a lesser MCE is approved by AFSC/SEW.

12.57.3. AIM-9 Missiles.

12.57.3.1. A warhead detonation will not cause sympathetic detonation of adjacent AIM-9 missiles provided warheads are separated by 22 inches or more, or warheads are not radially aligned. If these conditions are met, MCE is limited to a single AIM-9 warhead.

12.57.3.2. See Table 12.5 for HFD in the open.

12.57.3.3. AIM-9 missiles that detonate in AURC containers will not propagate to any adjacent container either vertically or horizontally. MCE is limited to four warheads.

12.57.4. AIM-120 Advanced Medium Range Air-to-Air Missile (AMRAAM).

12.57.4.1. Out of container, these missiles are HD 1.1. In an AURC, they are HD 1.2.1.

12.57.4.2. MCE is limited to a single AIM-120 missile when the warheads of adjacent AIM-120 missiles are separated by 100 inches or more. See Table 12.5 for single missile HFD.

12.57.4.3. See Table 12.5 for HFD for missiles in radial alignment and at less than 100 inches from each other.

12.57.4.4. Containers. All missiles in an AURC will sympathetically detonate, therefore the MCE is all four warheads in the AURC. For AIM-120s with the WDU-33/B warhead, the AURC MCE is 68 lbs. For AIM-120s with the WDU-41B warhead, the AURC MCE is 76 lbs.

12.57.5. Single container MCEs may be used for mixed storage configurations of AIM-7, AIM-9 and AIM-120 missile containers provided the following conditions are met:

12.57.5.1. Each stack of containers will contain the same type of missile and warhead.

12.57.5.2. Each stack will be no more than three containers high.

12.57.5.3. For containers of AIM-7 missiles with the WAU-l0 warhead: (1) the missiles must be oriented in the same direction within the container, (2) there is no restriction on the orientation of the containers relative to one another within a stack, (3) there is no restriction on the orientation of containers between stacks, and (4) there is no required separation between stacks. MCE of the stack(s) is 105 pounds (lbs) of HD 1.1 (based on the four warheads a single container).

12.57.5.4. For containers of AIM-7 missiles with the WAU-17 warhead: (1) the missiles must be oriented in the same direction within the container, (2) the containers within a single stack must be alternated (nose-to-tail), (3) there is no restriction on the orientation of containers between stacks, and (4) there is no required separation between stacks. MCE of the stack(s) is 144lbs of HD 1.1 (based on the four warheads in a single container).

12.57.5.5. For containers of AIM-9 missiles with the WDU-l7 warhead: (1) there is no restriction on the orientation of the missiles relative to one another within a container, (2) there is no restriction on the orientation of the containers relative to one another within a stack, (3) there is no restriction on the orientation of containers between stacks, and (4)

there is no required separation between stacks. MCE of the stack(s) is 32 lbs of HD 1.1 (based on the four warheads in a single container).

12.57.5.6. For containers of AIM-120 missiles with the WDU-33/B warhead: (1) the missiles must be oriented in the same direction within the container, (2) there is no restriction on the orientation of the containers relative to one another within a stack, (3) there is no restriction on the orientation of containers between stacks, and (4) there is no required separation distance between stacks. The stack(s) is HD 1.2.1 with an MCE of 68 lbs (based on the four missiles in a single container)

12.57.5.7. For containers of AIM-120 missiles with the WDU-41/B warhead: (1) the missiles must be oriented in the same direction within the container, (2) there is no restriction on the orientation of the containers relative to one another within a stack, (3) there is no restriction on the orientation of containers between stacks, and (4) there is no required separation distance between stacks. The stack(s) is HD 1.2.1 with an MCE of 76 lbs (based on the four missiles in a single container).

12.57.5.8. Stacks of differing missile and warhead configurations will be separated from each other by a horizontal distance of 100 inches. (For example, stacks of AIM-7/WAU-10 containers will be separated by a horizontal distance of 100 inches from stacks of AIM-7/WAU-17 containers.)

12.57.5.9. When the above conditions are met, the storage of mixed AIM-7, AIM-9 and AIM-120 missile containers (with the specified warheads) may be sited using the most restrictive of the following:

12.57.5.9.1. Site the greatest MCE present as HD 1.1 (regardless of whether the greatest MCE is for HD 1.1 or HD 1.2.1).

12.57.5.9.2. Site the total HD 1.2.1 Net Explosive Weight for Quantity-Distance (NEWQD) present.

12.57.6. AGM-65 Missiles. Explosives weights of individual AGM-65 missiles or loaded launchers need not be added together if adjacent missiles or launchers are separated by at least 130 inches and the nose of any AGM-65 missile does not point at any other missile.

12.57.7. AGM-88 Hi-Speed Anti-radiation Missile (HARM). For storage and transportation in an AURC, missiles are assigned HD 1.2.1, with an MCE <100 lbs. Out of container, missiles are assigned HD (04)1.1. A warhead detonation will not cause sympathetic detonation of adjacent warheads if they are separated by at least 6 inches, or if the warheads are not radially aligned.

12.57.8. Mixed Trailer Loads. Use criteria above and configurations as shown in T.O. 11-1-38, *Positioning and Tie-Down Procedures – Nonnuclear Munitions*, to determine MCE.

12.58. Inspection Stations for AE Conveyances.

12.58.1. Inspection stations for trucks, trailers and railcars containing AE that are used exclusively for the activities below are not subject to QD criteria. However, these stations should be located as far as practical from other hazards (e.g., explosives, POL), populated areas, and flight lines, and the AE conveyance should be removed promptly. Allowable activities are:

12.58.1.1. External visual inspection of the railcars or trucks containing AE.

12.58.1.2. Visual inspection of the external condition of the cargo packaging in vehicles that have passed the external inspection indicated in paragraph 12.58.1.1.

12.58.1.3. Interchange of trucks, trailers, or railcars containing AE between the common carrier and the DoD activity.

12.58.2. Inspection stations used for any other purpose (e.g., explosives storage, suspect vehicle holding area) will comply with applicable QD criteria.

12.59. Interchange Yards for AE Conveyances.

12.59.1. Interchange yards for trucks, trailers, and railcars containing AE that are used exclusively for the activities below are not subject to QD criteria. However, these interchange yards should be located as far as practical from other hazards (e.g., explosives, POL), populated areas, and flight lines, and the AE conveyance shall be removed promptly. Allowable activities are:

12.59.1.1. External inspection of the trucks, trailers, or railcars containing AE.

12.59.1.2. Visual inspection of the external condition of the cargo packaging in vehicles that passed the external inspection indicated in paragraph 12.59.1.1.

12.59.1.3. Interchange of trucks, trailers or railcars containing AE between the common carrier and the DoD activity.

12.59.2. Truck, trailer, or railcar interchange used for any other purpose (e.g., explosives storage, suspect vehicle holding area) will comply with applicable QD criteria.

12.60. Holding Yards for AE Conveyances.

12.60.1. Site vehicle and rail holding yards as AGM per Tables 12.1, 12.2 and 12.3.

12.60.1.1. Where possible, explosives-loaded vehicles and railcars shall be separated from each other by the applicable IMD. Distances to other exposures will then be based on the vehicle and railcar with the largest NEWQD.

12.60.1.2. If IMD between vehicles and railcars cannot be met, they shall be parked in groups, with IMD between each group. Distances to other exposures will then be based on the total amount of explosives within the group of vehicles or railcars with the largest NEWQD.

12.60.1.3. Where neither paragraph 12.60.1.1 nor 12.60.1.2 above is possible, the total NEWQD of all vehicles or railcars will be used to determine separation distances.

12.60.2. In addition to the temporary parking of railcars, trucks, or trailers containing AE, holding yards may be used to interchange truck, trailers or railcars between the commercial carrier and the DoD activity, and to conduct visual inspections, but can not be used simultaneously for these activities.

12.60.3. In developing large rail holding yards, consider the following layout guidance:

12.60.3.1. Design rail holding yards on a unit car or explosives weight group basis (e.g., 50,000, 100,000, or 250,000 net pounds of HD 1.1 explosives, regardless of the number

of cars involved). Separate each explosives quantity car group from all other groups by IMD.

12.60.3.2. Yards may be formed by two parallel ladder tracks connected by diagonal spurs or by a "Christmas tree" arrangement (a ladder track with diagonal dead-end spurs projecting from each side at alternate intervals). Other arrangements tailored to the operation are allowed. However, separate parallel tracks and spurs of all types by IMD for the quantities of AE involved.

12.61. Classification Yards.

12.61.1. Where the volume of vehicle or rail traffic necessitates, establish a classification yard primarily for receiving, classifying, switching, and dispatching explosives-laden vehicles and railcars.

12.61.2. As an ES, site classification yards at IMD from all PESs.

12.61.3. Classification yards do not require siting as a PES provided they are used exclusively for:

12.61.3.1. Receiving, dispatching, classifying, and switching of cars.

12.61.3.2. Interchanging of trucks, trailers, or railcars between the common carrier and the DoD activity.

12.61.3.3. Conducting external inspection of vehicles or railcars, or opening of free rolling doors of railcars for the purpose of removing documents and making a visual inspection of the cargo. Freeing or repairing a stuck or damaged door or doing any work inside a car is prohibited unless QD requirements can be met.

12.61.4. Specific QD separation applies if the classification yard is used for any other purpose (e.g., placing or removing dunnage or explosive items into or from vehicles or railcars).

12.62. AE Transportation Mode Change Locations.

12.62.1. Site transportation mode change locations as operating locations per Tables 12.1, 12.2 and 12.3.

12.63. Suspect Vehicle Holding Areas. Explosives-loaded vehicles or railcars found or suspected to be in a hazardous condition will be moved to a suspect vehicle holding area, unless it is more hazardous to move the vehicle or railcar. Suspect vehicle holding areas will be separated (isolated) from other PES or ES by the applicable QD treating the holding area as an AGM.

12.64. Secure Holding Areas.

12.64.1. Secure holding areas are designated for the temporary parking of commercial carriers' motor vehicles transporting DoD-owned Arms, Ammunition, and Explosives (AAE), classified (SECRET or CONFIDENTIAL) materials, and Controlled Cryptographic Items (CCI). There are two types of secure holding areas and the criteria for each are provided below. (Note: The intent of such areas is to provide a secure storage location for commercial carriers while in-transit, during emergencies or other circumstances that are beyond a carrier's control. Installations must site secure holding areas to meet known

taskings. The term Secure Holding Area is applicable to areas (CONUS, Hawaii, Alaska, and Puerto Rico) governed by Military Standard (MIL-STD)-882D, *Standard Practice for System Safety*, and DTR 4500.9-R.

12.64.1.1. **Secure Explosives Holding Area.** Site as a holding yard per paragraph 12.60.

12.64.1.2. **Secure Non-explosives Holding Area.** No siting required if located outside all QD arcs. If located within a QD arc, site at PTRD from all PESs. The holding of HD 1.4S materials, without regard to QD, is permitted at this location.

12.64.2. See paragraph 1.5 when there is no Secure Holding Area sited for the NEWQD or HD of the vehicle for unforeseen taskings.

12.65. Detached Loading Docks.

12.65.1. Detached loading docks that service multiple facilities shall be sited on the basis of use with regard to the facilities serviced, as shown below. They shall be sited as AGM with regard to all other facilities.

12.65.2. When servicing magazines, such docks must be separated from the magazines by IMD, based only on the explosives limit of the loading dock.

12.65.3. When servicing operating buildings, such docks must be separated from the operating building by ILD, based only on the explosives limit of the loading dock.

12.65.4. Loading docks that support a single PES do not require QD separation from the supported PES.

12.66. Service Magazines for Operating Locations.

12.66.1. Apply ILD from a service magazine to the operating location it supports. No QD separation is required from the supported operating location back to the service magazine. (See **paragraph 12.12.2**.)

12.66.2. Site the service magazine as an AGM per Tables 12.1, 12.2 and 12.3 to all PESs that it does not support.

12.66.3. Railcars and vehicles should not be used as service magazines for explosives operating locations, unless such use is essential.

12.67. Non-Explosives Loaded Vehicle Parking Areas.

12.67.1. Reference DoD 5100.76-M, *Physical Security of Sensitive Conventional Arms, Ammunition, and Explosives*, for parking POVs in a munitions storage area.

12.67.2. Site parking areas not supporting the explosives mission (such as parking lots for administrative areas) as PTR exposures per Tables 12.1, 12.2 and 12.3. A minimum 100 foot separation distance is required unless a greater minimum distance is specified in Tables 12.1, 12.2, or 12.3. (Note: Motor pools normally require IBD because of office, workshops, and other inhabited buildings.)

12.67.3. Site POV parking areas supporting multiple PESs as related facilities per Tables 12.1, 12.2 and 12.3 from the PESs they support. A minimum 100 foot separation distance is required. GOV and AGE parking areas supporting multiple PESs will be sited at 100 ft from

supported PESs. For GOV and AGE parking areas supporting multiple PESs, the 100 ft minimum may be reduced to 50 ft if applicable PESs within 100 ft of the parking areas, are of non-combustible construction and have a barrier, sufficient to prevent the vehicle from rolling within 50 ft of the PES, located between the parking spaces and the PES. Access for emergency vehicles must be provided. (Note: The provisions of this subparagraph do not negate the need to comply with any applicable security requirements for POV access to or parking in explosives areas. See DoD 5100.76-M.)

12.67.4. When a POV, GOV or AGE parking area supports a single PES, it may be located at 100 ft minimum from the PES it supports to protect the PES from vehicle fires. This minimum distance of 100 ft may be reduced to 50 ft if the PES is of non-combustible construction and a barrier sufficient to prevent the vehicle from rolling within 50 ft of the PES is located between parking spaces and the PES. Access for emergency vehicles must be provided. (Note: The provisions of this subparagraph do not negate the need to comply with any applicable security requirements for POV access to or parking in explosives areas. See DoD 5100.76-M.)

12.67.5. Temporary parking of GOVs or AGE, other than those being loaded or unloaded, will not be closer than 25 ft to any PES. Temporary means the length of time for which the presence of the vehicle is essential to completion of a single task (e.g., a single work order number).

12.67.6. Parking areas used exclusively for non-munitions WRM vehicles will be sited at ILD from all PESs. A minimum 100 foot separation distance is required. PTRD or IBD should be used, when possible, to prevent unacceptable damage to critical war support vehicles and equipment.

12.68. Inert Storage.

12.68.1. Unoccupied inert storage facilities that are directly related to the explosives mission, and unoccupied inert storage facilities not directly related but where control of and access to such inert storage is restricted only to personnel directly related to the explosives mission, may be located at fire protection distance from all related PESs (100 ft if the PES structure is combustible; 50 ft if the PES structure is non-combustible). Locations for such inert storage facilities will be determined only after consideration of personnel exposure, the importance of the materiel in relation to the explosives mission, the operational conditions, and the availability of space.

12.68.2. Unoccupied inert storage not directly related to the explosives mission and when accessed by personnel not directly related to the explosives mission, will be sited as a PTR exposure per Tables 12.1, 12.2 and 12.3, when located in the open (no structure involved). The PTRD will be based on blast overpressure only; fragment distances will not be used. Locate such inert storage within an explosives clear zone only after consideration of personnel exposure, the importance of the materiel in relation to the mission, the operational conditions, and the availability of space. Minimum fire protection distances given in paragraph 12.68.1. apply.

12.68.3. Unoccupied inert storage not directly related to the explosives mission and when accessed by personnel not directly related to the explosives mission, will be sited as an inhabited building per Tables 12.1, 12.2 and 12.3, when located in a structure. The IBD will

be based on blast overpressure only; fragment distances will not be used. Minimum fire protection distances given in paragraph 12.68.1. apply.

12.68.4. Site occupied inert storage facilities (e.g., warehouses) supporting the explosives mission as related facilities per Tables 12.1, 12.2 and 12.3 from the PESs they support.

12.68.5. Site occupied inert storage facilities (e.g. warehouses) not supporting the explosives mission as inhabited buildings per Tables 12.1, 12.2 and 12.3.

12.68.6. Site related non-munitions WRM storage at ILD from all PESs. PTRD or IBD should be used, when possible, to prevent unacceptable damage to critical war support assets. See paragraph 12.68.2 and 12.68.3. for non-related unoccupied non-munitions WRM storage.

12.69. Protective Shielding and Remotely Controlled Operations. For operations requiring protective shielding or remote control per paragraph 4.17., see paragraph 7.30. for operating requirements and apply the following QD separations:

12.69.1. As an ES, treat as an operating location per Tables 12.1, 12.2 and 12.3.

12.69.2. As a PES:

12.69.2.1. Provide equivalent PTRD protection for blast and thermal hazards, and equivalent IBD protection for fragment hazards, to related personnel.

12.69.2.2. Provide IBD to all other non-related occupied ESs.

12.69.2.3. Treat as an operating location per Tables 12.1, 12.2 and 12.3, for protection of unoccupied ESs; use of Table 12.1, Note 21 is not allowed.

12.70. Deleted.

12.71. Buffered Storage.

12.71.1. **Buffered Storage Concept.** Under certain conditions, propagation can be prevented between stacks of tritonal-filled MK-82 and MK-84 bombs. NEWQD for QD purposes is the explosives weight of the largest stack plus explosives weight of intervening buffer material (excluding HD 1.4). Buffered storage can be used in earth covered magazines, aboveground magazines, or open stacks. The following limitations apply:

12.71.1.1. Stacks are limited to 64 MK84 or 312 MK82 bombs. Combined stacks are limited to 60,500 lbs NEWQD.

12.71.1.2. Acceptable buffer materials are: palletized 20mm ammunition, palletized 30mm ammunition, or CBU-58s packaged two per metal container, stacked one pallet wide (one container CBU-58) and as high as the stack being protected.

12.71.1.3. Buffer materials must be positioned between the two stacks of bombs to prevent line-of-sight exposure between stacks.

12.71.1.4. Steel nose and tail plugs must be used in all bombs. Bombs are arranged so the noses of the bombs in each stack are facing the buffer.

12.71.1.5. A minimum of 38 ft is maintained between the nearest bombs of the separate stacks. For bomb stacks of 24,000 lbs NEWQD or less, 20 ft is acceptable. The stacks will be arranged within a structure so access is possible to verify the configuration.

12.71.1.6. Only serviceable munitions may be used in the bomb stacks or the buffer stacks.

12.71.1.7. Buffer material may be removed for periodic inspections without effecting sited capacities if it is returned within 24 hours.

12.71.1.8. Buffered storage is approved for storage in locations where US explosives safety standards are the only criteria applied. In locations where the host nation has established safety criteria, these principles must be accepted by the host nation before they may be applied.

12.71.2. Units wanting to use different configurations or buffer materials must submit definitive drawings through the MAJCOM to AFSC/SEW for approval. These new buffers will consist of HD 1.2, 1.4, or inert materials that have an aerial density of 500 pounds per square foot. For bomb stacks less than 24,000 lbs NEWQD, an aerial density of 250 pounds per square foot is acceptable.

12.72. Angled Storage.

12.72.1. **Angled Storage Concept.** Tests have shown that fragments from an exploding MK-82/84 bomb that are capable of initiating a nearby bomb are limited to a zone extending perpendicular to the bomb. Therefore positioning of bombs outside the fragment zone of other bombs may significantly reduce the MCE.

12.72.2. Angled Storage in HASs.

12.72.2.1. Place single bombs and loaded triple ejector racks (TER), or bomb rack units (BRU) at a 15 degree angle along one shelter wall. Angle bomb and rack away from the aircraft and point tails toward the wall.

12.72.2.2. Maintain 4-ft separation distance from MK-84s to other weapons and 30-inch separation from MK-82s to other weapons.

12.72.2.3. Do not align unfuzed cavities of bombs.

12.72.2.4. Install fuzes, boosters, steel nose and tail plugs or guidance packages.

12.72.2.5. Do not place bombs in an area on either side of another bomb bounded by two lines, 20 degrees forward and aft of lines perpendicular to the bomb centerline and starting at the nose and the tail of the bomb, respectively (see Figure 12.8).

12.72.2.6. If above criteria is complied with, the MCE is the cumulative NEWQD of one TER or BRU, or for single angled bombs, it is the NEWQD of one bomb. When an explosives loaded aircraft is in the HAS, the weight of the explosives on the aircraft and the stored weapons must be combined if either the weapons on the aircraft or the stored weapons are in the fragment zone, described above, of the other weapons.

12.72.3. Deleted.

12.73. Areas for Burning AE.

12.73.1. Check environmental compliance and Resource Conservation and Recovery Act (RCRA) requirements and permits for this operation. For overseas locations, check Status of Forces Agreement and applicable technical agreements for any applicable environmental protection requirements.

12.73.2. Burning HD 1.3 materials can generate significant internal pressures. Some HD 1.3 materials can undergo a transition from a deflagration to a detonation, in which case the effects are virtually identical to the detonation of conventional high explosives (HD 1.1). For information on an item, contact the item manager.

12.73.3. Use QD formulas described in paragraph 12.11. and site burning areas as follows:

12.73.3.1. Use K40 from burning areas to all locations involving personnel that are not essential to the planned burn or to non-explosives facilities not related to the burn. If the NEWQD of the burn material is more than 450 lbs, the minimum safe separation distance shall be at least 1,250 ft. Use table 12.4. for determining the HFD for NEWQDs less than or equal to 450 lbs.

12.73.3.2. Apply K40 with no minimum fragment distance from burning areas to locations with exposed aircraft.

12.73.3.3. Use K24 with no minimum fragment distance from burning areas to all locations involving personnel that are essential to the planned burn, explosives operating locations not related to the burn, explosives storage facilities, related non-explosives facilities, or above ground utilities.

12.73.3.4. Locate burning areas at ILD from other PESs.

12.73.3.5. Locate control sites for burning areas at PTRD from all other PESs.

12.73.4. Locate burning kettles at least 300 ft from inhabited buildings, public transport routes, and the base boundary. Separate from other explosives facilities by 300 ft or ILD, whichever is greater.

12.73.5. Lesser distances may be used if equivalent protection can be provided. Forward design and analysis information for equivalent protection to AFSC/SEW for approval.

12.74. Areas Used for Intentional Detonations. This paragraph does not apply to EOD training sites (see paragraph 12.76), off range locations (**see paragraph 12.77.3**.), emergency operations (see paragraph 4.20), or range clearance operations where the expected blast/fragmentation effects will not exceed existing range surface danger zones as defined in AFI 13-212, *Range Planning and Operations.*

12.74.1. Check environmental compliance and RCRA requirements and permits for this operation. For overseas locations, check Status of Forces Agreement and applicable technical agreements for any applicable environmental protection requirements.

12.74.2. Shaped charge jets or slugs from directed energy munitions can travel significantly greater distances than case fragments; therefore, these munitions require specific analysis. For information on an item, contact the item manager.

12.74.3. Use the following criteria from the detonation area to all locations involving personnel that are not essential to the planned detonation, non-explosives facilities not related to the detonation, locations with exposed aircraft and open explosives storage locations. If the minimum separation distance requirements for previously approved DDESB sitings or those prescribed in this section cannot be met, personnel shall be provided the protection specified in paragraph 4.18. (Note: The calculation of NEWQD for EOD intentional detonations differs from that used for transportation and storage. For intentional detonations,

NEWQD can never be less than NEW; and, TNT equivalency must be factored-in for specific high explosives being used. The NEWQD and TNT equivalent determination for EOD intentional detonation is addressed in AFTO 60A-1-1-4, *Protection of Personnel and Property*.)

12.74.3.1. For non-fragmenting AE, use K328 with a minimum distance of 200 ft.

12.74.3.2. For fragmenting AE, use the larger of the two distances given in subparagraphs 12.74.3.2.1. and 12.74.3.2.2:

12.74.3.2.1. K328 with a minimum distance of 200 feet.

12.74.3.2.2. The distances given in Table 12.26A or Table 12.26B. A calculated (using DDESB Technical Paper 16) or measured maximum fragment throw distance (including the interaction effects for stacks of items or single items, whichever applies) may also be used to replace these distances. Calculated case fragment maximum throw distances for selected munitions are listed in the **Fragmentation Data Review Form** located on the DDESB secure web page. This database is included in TP 16. (NOTE: Tables 12.26A and 12.26B, as well as the Fragmentation Data Review Form in TP 16, are for individual items. These distances do not directly apply to stacks of munitions. Further, these throw distances do not consider fragments that are produced by sections of nose plugs, base plates, boattails, or lugs. These fragments are sometimes referred to as "rogue" fragments. In addition, shaped charge jets or slugs from directed energy munitions can travel significantly greater distances than case fragments; therefore, these munitions require specific analysis.)

12.74.3.2.2.1. "Rogue" fragments produced by sections of nose plugs, base plates, or lugs, can travel significantly greater distances (more than 10,000 ft) than those shown in Tables 12.26A and 12.26B. Care must be taken either to properly orient the munition (e.g., lugs or strongbacks and nose or tail plate sections oriented away from personnel locations), or to minimize or eliminate the hazard of rogue fragments (e.g., sand bagging the munition prior to detonation). For such bombs and projectiles with a caliber exceeding 5 inches, the munition will be buried or covered according to the Buried Explosion Module procedures outlined in DDESB TP 16.

12.74.3.2.2.2. For detonation of multiple munitions, comply with the following unless an approved technical order alternative is authorized:

12.74.3.2.2.2.1. Place the munitions in a single layer with their sides touching such that their axis is horizontal.

12.74.3.2.2.2.2. Place the munitions so that the nose of each munition is pointing in the same direction.

12.74.3.2.2.2.3. Orient the munitions so that lugs or strongbacks and nose or tail plate sections are facing away from areas to be protected.

12.74.3.2.2.2.4. Initiate the stack detonation so that all munitions detonate simultaneously.

12.74.3.2.2.2.5. Use the following when the procedures outlined in

paragraphs 12.74.3.2.2.2.1 through 12.74.3.2.2.2.4 cannot be met:

12.74.3.2.2.2.5.1. If the orientation of the potential rogue fragments can be controlled, then the separation distance required by the Fragmentation Data Review Form in TP 16 shall be increased by 33 percent to account for the interaction effects and/or non-design mode initiation.

12.74.3.2.2.2.5.2. If the orientation of potential rogue fragments cannot be controlled, fragment ranges must be evaluated on a case-by-case basis.

12.74.3.2.2.2.5.3. If detonations involve stacks of mixed munitions, evaluate the distance for each munition separately using the procedures in paragraph 12.74.3.2.2 and select the largest distance.

12.74.4. Use the following criteria from the detonation area to all locations involving personnel that are essential to the planned detonation, explosives storage facilities, and above ground utilities:

12.74.4.1. For non-fragmenting AE, use K105 with a minimum distance of 200 ft. Exception: Personnel protection for essential personnel involved in EOD operations will be in accordance with AFTO 60A-1-1-4, Protection of Personnel and Property.

12.74.4.2. For fragmenting AE, use K105 with a minimum distance of 200 ft. Provide a personnel shelter that offers adequate overhead and frontal protection capable of defeating all potential fragments. Exception: Personnel protection for essential personnel involved in EOD operations will be in accordance with AFTO 60A-1-1-4.

12.74.4.2. **(ACC)** In the absence of approved fragmentation protection provide separation in accordance with paragraph **12.74.3.2**

12.74.4.3. If the minimum personnel protection distance in paragraph 12.74.4.1 or 12.74.4.2 is not available, construct a personnel shelter that will provide equivalent protection from the expected blast overpressure and fragment hazards for the types of munitions used. Locate it at least 200 ft from the detonation area. Obtain shelter design approval per paragraph 12.74.8.

12.74.5. On-site authorities designate essential personnel and determine minimum distance for equipment and unoccupied non-explosives facilities related to the detonation.

12.74.6. From the detonation area to underground utilities, use K18 with a minimum distance of 100 ft.

12.74.7. Control sites for intentional detonations for AE disposals, live-fire demonstrations and Explosive Ordnance Disposal (EOD) non-emergency operations must be at ILD from other PES, based on the PES's NEWQD.

12.74.8. Lesser distances may be used if equivalent protection can be provided. Forward design and analysis information for equivalent protection to AFSC/SEW for approval.

12.75. EOD Operational Responses. EOD operational responses require the application of public withdrawal distances to all non-essential personnel per paragraph 10.11 and 10.12.

12.76. EOD Proficiency Training Ranges.

12.76.1. Because the quantity of explosives required to maintain EOD proficiency is small, criteria for an EOD proficiency training range are not as stringent as required for a detonation area (see **paragraph 12.74**). Limit EOD training ranges to a maximum of 5 lbs of demolition explosives. Use only non-fragmenting charges (e.g., Boot Banger, bare C-4, Conical Liquid Follow Through), shaped charges (e.g., Mk 7 series, Mk 2, flex linear), ordnance penetrators (e.g., Mk 23, Mk 24), and explosive powered tools (e.g., Mk-2 dearmer, Percussion Actuated Non-electric Disruptor). A minimum of three sand bags must be placed in front of explosive penetrators to capture explosively formed penetrator and limit directional force.

12.76.2. EOD proficiency training range destruction points will be constructed to control ejection of debris by:

12.76.2.1. Constructing a barricade with two entrances, which surrounds the destruction point, that is the equivalent of at least two side-to-side sandbags, is at least 6 ft high, and is constructed within 10 ft of the destruction point.

12.76.2.2. Locating the barricade entrances at 180 degrees separation. These entrances will be barricaded, as above, to effectively block all debris.

12.76.3. Use the following criteria from the destruction point to all above ground facilities (including public traffic routes, base boundaries, runways, taxiways, parking aprons and any PES except for associated holding pads as discussed in para 12.76.8 below):

12.76.3.1. If the destruction point is at least 500 ft from these facilities, a 5 lbs NEWQD limit applies.

12.76.3.2. If the destruction point is less than 500 ft but 300 ft or more from these facilities, a 2.5 lb NEWQD limit applies.

12.76.3.3. If the destruction point is less than 300 ft but 200 ft or more from these facilities, a 1.25 lb NEWQD limit applies.

12.76.4. EOD proficiency training ranges on which explosively-operated tool kits and explosively-driven IED Defeat charges are used on inert targets. Targets may be “monitored” by non-fragmenting explosive charges that are within parameters of the established range. The tools, charges, and targets all require 100 ft separation distance from the destruction point to all above ground facilities. The destruction point will be barricaded per paragraph 12.76.2.

12.76.4.1. EOD tools (explosives devices) and inert training devices or targets are non-fragmentation producing devices. They may produce some debris, but that should not be mistaken for fragmentation. Fragmentation is specifically designed into a weapon or device; debris is not.

12.76.4.2. Vehicle-targets (for remote-opening techniques or otherwise checking for IEDs) on EOD proficiency ranges is standard practice. EOD teams are allowed to do this type of training on their proficiency ranges.

12.76.5. On-site authorities determine the minimum separation distance for essential personnel.

12.76.6. EOD proficiency training ranges used with other than bare charges or non-fragment producing items will meet the requirements of paragraph 12.74. If using the training range for operations that will produce fragments above the level expected for normal EOD proficiency training (normally open shots), meet the requirements of paragraph 12.74.

12.76.7. If the proficiency training range is located on an existing disposal range and meets the 500-foot separation distance from the detonation point to the perimeter of the disposal range in accordance with the requirements listed in TO 11A-1-42, Section 1, then barricades identified in paragraph 12.76.2 are not required.

12.76.8. Holding pads. Holding pads for additional training shots will be sited using aboveground magazine criteria. ILD must be maintained to the destruction point and to the personnel control site. IMD must be maintained between each holding pad.

12.76.9. Locate control sites and detonation points at PTRD from all other PESs.

12.77. EOD Training at Off-Range Locations.

12.77.1. EOD personnel may use procedures with explosively propelled liquids, shots, gases, slugs, or heat at off-range locations on military installations in support of unit training, inspections, and evaluations.

12.77.2. EOD teams may use the following tools:

12.77.2.1. MK 1 Remote Wrench.

12.77.2.2. MK 2 .50 Dearmer.

12.77.2.3. MK 31 Jet Remote Opening Device (JROD).

12.77.2.4. Improvised Dearmer.

12.77.2.5. Robotic Vehicle (with shotgun).

12.77.2.6. Stand-off disrupter.

12.77.2.7. Stand-off dearmer.

12.77.2.7. **(ACC)** Refer to Technical Order 6OA-2-1-3-2, *Field Fabricated Disposable Dearmer*. **Note:** Ensure projectile slug is removed from non-electric .50 cal cartridges prior to firing.

12.77.2.8. Percussion Actuated Neutralizer (PAN).

12.77.2.9. Explosively propelled water charges (commercially produced or improvised).

12.77.3. Use only the explosives items listed below for off-range unit training, inspection and evaluation operations. Quantities shown are the maximums authorized for each inspection or evaluation scenario. EOD 60-Series publications will be used to calculate appropriate standoff distances for EOD training and operations at off-range locations.

12.77.3.1. Two .50 caliber impulse cartridges.

12.77.3.2. Two .50 caliber ball, M2 cartridges (projectile extracted).

12.77.3.3. Two electric or non-electric blasting caps.

12.77.3.4. Twenty feet of standard detonating cord (DODIC M456).

12.77.3.5. Thirteen feet of safety fuse.

12.77.3.6. Three M60 fuse lighters.

12.77.3.7. Three AN-M14 thermite grenades.

12.77.3.8. Five 12 gauge shotgun shells. (Note: Do not use 00 buckshot at off-range locations. When using # 7 1/2 shot, ensure a safe distance for shot travel.)

12.77.3.9. Five stand-off disrupter blank cartridges.

12.77.3.10. Shock Tube as required.

12.77.3.10. **(ACC)** Percussion Actuated Non-Electrical Stand-off Disrupter Shock-Tube, 1000 feet.

12.77.3.11. Igniters (Shock Tube Initiators, DODIC YY35) as required.

12.77.3.12. 5 each PAN Cartridges.

12.77.3.12. **(ACC)** Use only blank cartridges and/ or disintegrating slugs (AVON.)

12.77.4. Under the following conditions, EOD personnel may conduct off-range operations using the tools and explosives described in paragraphs 12.77.2 and 12.77.3:

12.77.4.1. Coordinate specific location with the installation weapons safety office, prior to the operation.

12.77.4.2. Make proper notifications concerning anticipated noise.

12.77.4.3. Do not locate the operation in an explosives prohibited zone.

12.77.4.4. Evacuate personnel to the applicable withdrawal distances required for an actual situation.

12.77.4.5. Place a minimum of three filled sand bags in front and behind tools that project slugs, fluids or shot to limit directional force.

12.77.4.6. Use only slugs made of plaster, which will disintegrate on impact.

12.77.4.7. Select an area free of all fire hazards and use only inert training ordnance or IED concealment devices (see paragraph 12.76.4) as a target.

12.77.4.8. When operating tool sets inside a building, take positive measures to prevent secondary or collateral damage.

12.78. Static Test Firing Propellant Loaded Items.

12.78.1. Using the total NEWQD of the propellant, site static test locations using K40 with a minimum distance of 300 ft to all PESs and locations where there are non-essential personnel and operations. Maintain a minimum of 50 ft from the non-flame exposure area and 300 ft from the flame exposure area to related non-explosive exposed sites, unless an engineering analysis shows a lesser distance is adequate. The flame exposure area is 45 degrees on either side of the flame exit nozzle or port.

12.78.2. Test authorities designate essential personnel. Provide these personnel with protection as required in paragraph 4.19.

12.79. Military Working Dog (MWD) Explosives Search Training. Training of MWD involves searches to detect explosives that have been hidden in various public places. These training operations typically include handling explosives, cutting or dividing explosive training aids, removing explosives from shipping and storage containers, and repackaging explosives into other containers. For these reasons, training operations will:

12.79.1. Be conducted by qualified personnel.

12.79.2. Be conducted in facilities that meet the requirements of this Manual.

12.79.3. Store explosives in facilities that meet the requirements of this Manual.

12.79.4. Provide non-essential personnel:

12.79.4.1. K40 separation distance from the training site if more than 15 lbs NEWQD are being used for the exercise.

12.79.4.2. 100 ft separation distance from the training site for NEWQD $\leq$ 15 lbs.

12.79.5. Minimize the number of samples and the quantity of explosives for each sample. On-site authorities will determine the total quantity of explosives permitted during an exercise considering:

12.79.5.1. The value and importance of the exposed facilities.

12.79.5.2. The exercise operating conditions.

12.79.5.3. The available separation distance for non-essential personnel.

12.79.6. Separate samples a sufficient distance apart to prevent an explosion from propagating from one sample to another.

12.79.7. Not use any initiating devices or initiating explosives.

12.79.8. Not place explosives near any heat or spark producing items (e.g., bare electrical wiring, radiators, electric heaters, heating vents, etc.).

12.79.9. Not place explosives in metal containers or other means of confinement that could produce fragments in the event of an accidental explosion.

12.80. Demilitarization Operations for Expended 50-Caliber and Smaller Cartridge Casings..

12.80.1. A demilitarization operation for processing expended .50-caliber and smaller cartridge cases can be treated as a non-explosive operation provided:

12.80.1.1. Cartridge casings to be processed are screened prior to processing. (Note: Screening is intended to ensure that only .50-caliber and smaller are processed, and to remove unused .50-caliber and smaller cartridges.)

12.80.1.2. Demilitarization processing equipment is tested to be capable of containing overpressure, fragment, and thermal hazards associated with a worst-case reaction involving a single live round of the most energetic cartridge that could be processed in the equipment.

12.80.1.3. Demilitarization processing equipment is operated within the manufacturer's specifications and restricted only to the processing of expended .50-caliber and smaller cartridge casings.

12.80.1.4. Demilitarization processing equipment is inspected and maintained to ensure safe operation.

12.80.2. MAJCOMs will:

12.80.2.1. Approve the use of specific demilitarization processing equipment.

12.80.2.2. Establish and implement procedures for:

12.80.2.2.1. Screening and segregating the material to be processed.

12.80.2.2.2. Operating, inspecting, and maintaining the demilitarization processing equipment to ensure safe operation.

12.80.2.2.3. Dispositioning of processed material.

12.80.3. Demilitarization processing operation locations meeting the requirements of paragraphs 12.80.1 and 12.80.2 do not require siting as a PES. As an ES, they must be located at ILD from all PESs, except from the PES from which it is integral.

12.81. POL and Other Hazardous Materials.

12.81.1. Unprotected, aboveground bulk storage tanks ($\geq$ 5,000 gallons) for hazardous materials (e.g., POL, liquid petroleum) will be separated from all PESs by IBD. A dike system satisfying NFPA 430, *Code for the Storage of Liquid and Solid Oxidizers* is required. Aboveground storage tanks that are provided protection against rupture or collapse from blast and fragment hazards may be sited at lesser distances when supported by testing or analysis.

12.81.2. Smaller unprotected, aboveground bulk storage tanks (< 5,000 gallons) will be separated from all PESs IAW paragraph 12.81.1. When this criteria cannot be met, weigh the cost of distance or protective construction against the strategic value of the stored material, the ease of replacement in the event of an accident, and the potential environmental impact. Reduced distances may be approved if the responsible commander accepts the possible loss of the tanks and any collateral damage that a fire might cause as a result of the tanks being punctured by fragments.

12.81.3. Railroad tank car and transfer points or operations, tank trucks, POL transmission pipelines, and hydrants will be separated from all PESs by IBD. Fuel truck transfer points or operations may be separated by PTRD, with no minimum fragment distance, if the trucks are limited to less than 48 hours at the location.

12.81.4. Unprotected, aboveground service tanks , to include fuel bladders, solely supporting AE storage or operating complexes that are supplied by a pipe system designed to resist blast and fragments may be sited at incremental IBD with a minimum distance of 400 ft from supported PESs provided:

12.81.4.1. Aboveground lines, if used, must be equipped with automatic shut-off valves at the source.

12.81.4.2. A dike system meeting the requirements of NFPA 430 is provided.

12.81.4.3. Responsible commander accepts the possible loss of the tanks and any collateral damage that a fire might cause as a result of the tanks being punctured by fragments.

12.81.5. A service tank (above or below ground) supporting a single PES or ES within an explosive clear zone does not require Q-D but will comply with NFPA 30.

12.81.6. Small quantities of POL or other hazardous materials used for operational purposes require no specific separation distance for explosives safety; however, they will be separated as required by NFPA 30 or 50', whichever is greatest. An example of this facility type would be small lockers used to store operational quantities of POL and other flammable materials in support of a single PES/ES. Operating procedures will be implemented to limit adverse environmental impacts in the event of an accidental explosion. This criteria does not apply to small daily use storage lockers located in operating environments.

12.81.7. Separate parking areas for fuel service trucks by ILD with a minimum of 100 ft from related PESs, and IBD from unrelated PESs.

12.81.8. Fixed refueling points will be sited at ILD with a 100' minimum from all related PESs. An example of this type of facility is a remote, unmanned self-service station commonly located in munitions storage areas and flightline AGE shops.

12.81.9. There must be at least 100 ft between explosives and any mobile petroleum dispensing unit operating in an explosives area, except where a shorter distance is needed during transfer operations to an underground tank located at less than 100 ft or where needed to refuel a mobile explosives transporter (such as the environmental control unit for the LGM-30) with the explosives load aboard.

12.81.10. Buried tanks and buried pipelines should be separated from all PESs containing HD 1.2, HD 1.3, HD 1.4, or HD 1.6 AE by at least 80 ft. The required separation distance for HD 1.1 or HD 1.5 AE is K3 with a minimum distance of 80 ft. Keep pumps and pump houses serving underground POL at least 50 ft from all PESs. If the PES is designed to contain the effects of an explosion, then no QD is required.

12.81.11. Consider cut and cover POL tanks as underground if they have at least 3ft of earth cover (5ft recommended if the PES exposing the tank could generate large secondary debris fragments) are sited at K3. Unmanned cut and cover support facilities require ILD from all PES's.

12.81.12. The following are exempted from QD requirements:

12.81.12.1. Explosives loaded aircraft to POL hydrants set on the flight line flush with the pavement.

12.81.12.2. Ammunition and explosives to in use material-handling equipment.

12.81.12.3. Licensed locations to POL facilities.

12.82. Storage Tanks for Water and Other Non-Hazardous materials .

12.82.1. Unprotected aboveground storage tanks and towers, whose loss is unacceptable, will be separated from all PESs by IBD. (See paragraph 10.24) Aboveground storage tanks that are provided protection against rupture or collapse from blast and fragment hazards may be sited at lesser distances when supported by testing or analysis.

12.82.2. QD criteria do not apply to storage tanks and associated components if loss is acceptable to the responsible commander.

12.83. Underground Tanks or Pipelines for Water and Other Non-Hazardous Materials. Underground tanks or pipelines for non-hazardous materials whose loss is unacceptable, will meet the siting requirements of paragraph 12.81.10. QD criteria do not apply if loss is acceptable to the responsible commander.

12.84. Utilities and Services.

12.84.1. Utilities include: steam, water, natural gas, POL lines, sewage, air lines, electrical lines, communication lines, and environmental facilities or equipment. The term "utility" does not apply to services provided to individual or grouped explosives facilities when that service is not also secondarily provided to other parts of the installation or community. The following requirements apply to utilities:

12.84.1.1. Aboveground electric distribution lines carrying less than 69 kilovolt (kv), the tower or poles supporting those lines, communication lines, and unmanned electrical substations will be no closer to PESs than PTRD, with no minimum fragment distance.

12.84.1.2. Aboveground electric transmission lines carrying 69 kv or more and the tower or poles supporting them will be located no closer to PESs than:

12.84.1.2.1. IBD, with no minimum fragment distance, if the line in question is part of a grid system serving a large off-base area.

12.84.1.2.2. PTRD, with no minimum fragment distance, if loss of the line will not create serious social or economic hardships.

12.84.1.3. Aboveground electric transmission/distribution lines which can be interrupted without loss of power (i.e., power is rerouted through existing lines or networks) will be separated from explosives sites in accordance with paragraph 12.84.2.

12.84.1.4. Utilities that provide vital functions to a major portion of an installation will be no closer to PESs than IBD.

12.84.1.5. Power and utilities functions including power plants, compressor stations, and electric power transformers that serve an entire base complex, or when loss of the facility will cause an immediate loss of vital function, will be no closer to PESs than IBD.

12.84.1.6. Underground electrical and communications lines may be sited at K3 with no minimum distance required. Other underground utilities will meet the siting requirements of paragraph 12.81.10.

12.84.2. Overhead electric service lines (running past an explosives facility but not serving it) will be no closer to a combustible explosives facility or to an open explosives facility than the length of the electric lines between the nearest service poles and the length of the nearest service pole. An exception is when an effective means (e.g., line spacers, weights, etc.) is provided to ensure that energized lines on breaking cannot come into contact with the facility or its appurtenances. No separation is required for non-combustible facilities.

12.84.3. Manned auxiliary services including auxiliary power plants, compressor stations, and electric power transformers, may be located at ILD from PESs they support.

12.84.4. Unmanned auxiliary services (e.g., transformer stations, water treatment and pollution abatement facilities) that serve an explosives area, but are not an integral function in the explosives area, and that would not create an immediate secondary hazard if lost, may be located at barricaded ILD from the PESs they support, even though such services need not be barricaded.

12.84.5. Unmanned auxiliary service power generation or conversion facilities (e.g., power plants, transformers, etc.) that exclusively supply power to an explosives area or security fence lighting may be located at fire protection distance (50 ft for non-combustible ES structures, 100 ft for combustible ES structures) from all PESs in the supported explosives area.

12.84.6. Unmanned above ground utility services (e.g., water treatment, pollution abatement facilities, water pump stations, sewage lift stations, etc.) that do not serve an explosives area or an entire base complex, and when loss will not cause an immediate loss of a vital function may be located at PTRD with no minimum fragment distance.

12.84.7. See **paragraph 5.9**. for design requirements for electrical lines serving a PES.

12.85. LGM-30 (Minuteman). Use Table 12.27 to determine high explosives equivalency for the LGM-30 missile when calculating QD separations.

12.85.1. Calculate NEWQD for motor sets (Stages I, II, and III), assembled or unassembled, with HD 1.1 material, on HD 1.1 equivalency basis unless the HD 1.3 hazard is greater.

12.85.2. When only HD 1.3 motors are present, use total NEWQD of the motors, and apply HD 1.3 QD criteria. For LGM-30G motors use HD 1.3 QD criteria for shipping and storage purposes. When a warhead is added to the assembled set, the 7,400-lb high explosives equivalency applies. Safety distances are based on 7,400 lbs HD 1.1 high explosive equivalency for all LGM-30 missile motor sets (models A through G) with or without a warhead installed. IBD is 1,570 ft from buildings of public assembly and 1,200 ft from all other inhabited buildings.

12.85.3. Separations for aircraft loading and unloading sites for solid propellant motors in shipping and storage containers, Ballistic Missile Containers (SSCBM) and Payload Transporter Container: IBD is 1,200 ft (includes missile holding pads, facilities, aircraft or other equipment essential to the mission of the base; PTRD is 720 ft.

12.85.4. **Aircraft Loading and Unloading Sites.** When an aircraft loaded with these motors must be refueled, a fully staffed fire fighting truck will be on standby at the aircraft during fueling operations.

12.85.5. **Railroad Loading and Unloading Sites.** Criteria in paragraph 8.54 apply to railroad loading and unloading sites for Minuteman missile motors in the SSCBM and missile transporters shipped by the “piggyback” method.

12.85.6. **Missile Alert Facility (MAF).** Explosives-loaded vehicles (payload transporter, reentry vehicle guidance and control van, transporter erector) may be temporarily parked at the MAF, subject to the following controls:

12.85.6.1. Each instance must be approved by the wing or installation commander or his designated representative.

12.85.6.2. Allow parking if needed for severe weather, equipment breakdown and repair, crew rest, darkness (where state law prohibits vehicle travel on highways after dark) or other emergency conditions.

12.85.6.3. No smoking outside missile alert facility support buildings.

12.85.6.4. Park only one explosives-loaded vehicle.

12.85.6.5. Publish a detailed operating instruction of safety precautions and controls.

12.85.6.6. Ensure required security is maintained.

12.86. LGM-118 (Peacekeeper). Use Table 12.28 to determine high explosives equivalency for the LGM-118 missile when calculating QD separations.

12.86.1. Peacekeeper Separation. General explosives safety standards and QD criteria apply to the Peacekeeper except as follows: when stages 1, 2, and 3 are assembled at other than a silo launch facility (with or without stage 4 warheads being attached), the net explosives equivalency for the missile is 203,412 lbs HD 1.1.

12.86.2. When the missile is in a silo launch facility or during missile installation or removal from the silo, the net explosives equivalency is 20,000 lbs HD 1.1. This equivalency is to be used only for calculating IMD and ILD separations, and for use in risk assessments based on blast overpressure. Applicable distance for PTRD is 1,050 ft and for IBD is 1,750 ft.

12.87. Inter-DoD Component Support and Tactical Facilities.

12.87.1. **General.**

12.87.1.1. The separation distances in paragraph 12.87.2 will apply between facilities of one DoD Component to those of another DoD Component regardless of the location of the boundaries.

12.87.1.2. Other safety criteria (e.g., toxicity, noise, radiation, flight trajectory, etc.) may require greater distances. In these situations, the predominant hazard criteria apply.

12.87.2. The following minimum QD relationships apply:

12.87.2.1. AE storage facilities will be separated by IMD.

12.87.2.2. AE storage or operating locations of one DoD Component will be separated from AE operating locations of another DoD Component by IBD. (See paragraph 12.87.2.3 for an exception to this criteria.)

12.87.2.3. Explosive operations that present a similar degree of hazard or involve joint or support operations will be separated by ILD.

12.87.2.4. AE storage or operating locations of one DoD Component will be separated from AE tactical facilities of another DoD Component by IBD. For joint or support operations, determine the separation distance as though both facilities belonged to a single DoD Component.

12.88. Criteria for non-DoD Explosives Activities on DoD Installations.

12.88.1. Non-DoD explosives activities will only be conducted on DoD property per Table 12.29. These non-DoD explosives activities must also comply with Bureau of Alcohol, Tobacco, and Firearms (BATF), Federal Aviation Administration (FAA), and other Federal,

State, and local regulations. Definitions for the terminology used in Table 12.29 can be found in Attachment 1.

12.88.2. For these types of non-DoD explosives activities, DoD will only be responsible for ensuring that IMD requirements, as outlined in explosives site plan submissions, are met. DoD oversight of these non-DoD explosives activities is not intended.

12.88.3. Non-DoD, explosives activities will be evaluated based on IMD between multiple PES to ensure non-propagation. Where IMD is not met, then non-DoD, explosives activity's sites will be added to determine the applicable IMD or IBD to DoD sites.

12.88.4. In Table 12.29, "Check for IM" means if IMD is not maintained between each PES, explosives quantities will be totaled.

12.88.5. IBD will be determined based on this Manual.

12.88.6. The DoD site approval for non-DoD, explosives activities is limited to the area encumbered by the IBD arcs.

12.88.7. Review of building design, lightning protection, etc., is not necessary unless design features are used as justification to reduce the IBD arc.

Section 12P—-Space and Intercontinental Ballistic Missile Requirements

12.89. General Information. This section establishes explosives safety standards for storing, staging, maintaining, processing, assembling, handling, and testing large solid rocket motors (LSRM) and liquid propellants used in conjunction with space launch systems and Intercontinental Ballistic Missile (ICBM) test launches, and provides methods and criteria for mitigating the pre-launch risks associated with these operations.

12.89.1. These standards apply to Air Force locations that process, launch, and test launch vehicles or ballistic missiles containing more than 1,000 pounds of liquid propellants or more than 10,000 pounds of solid propellants. Quantity Distance criteria for space and ICBM systems is found in paragraph 12.97.

12.89.2. Space launch vehicles and ICBM class missile systems use large quantities of energetic materials as fuel and oxidizer for their propulsion systems. Typically, these propulsion systems contain liquid or solid propellants in thousand to million pound quantities. These launch vehicles and missile systems can, under launch conditions, react much more violently than during conditions such as transportation, storage, and handling. Launch conditions include vehicles in a fully pressurized configuration such as during countdowns and rehearsals, and testing on test stands. Pressurized vehicles can present a hazard to a wide area, in some cases miles of exposure. The combination of the potential for large explosions coupled with possible wide dispersion of the threat requires different methods of mitigating explosive hazards than normally used for non-dynamic hazards analysis, hazard classification, threat mitigation, and quantity-distance siting. These hazards and mitigating techniques will be contained in range or test requirement documents.

12.90. Support Facilities. These include those facilities used to store, stage, or process large rocket motors and motor segments. The same facility may be used for both staging and processing these motors. Take thermal and toxic properties as well as potential explosive effects in accordance with applicable directives such as UFC 3-340-02, *Structures to Resist the Effects*

of Accidental Explosions, into consideration prior to selecting or constructing operational maintenance and staging facilities for large rocket motors and motor segments.

12.90.1. Facility design and operational processing flow must keep the physical movement of these large rocket motors and motor segments to an absolute minimum. Limit the operations performed in these facilities to those associated with the primary function of the facility. Establish safety control areas as defined in paragraph 12.91., for all hazardous operations in these facilities.

12.90.2. There are two basic types of support facilities for large solid rocket motors (LSRM) and motor segments; a Motor Operations and Staging Facility, and a Motor Storage Facility.

12.90.2.1. **Motor Operations and Staging Facility.** This facility is primarily used to process and assemble LSRMs and motor segments for launch operations. It also has the capability for staging and maintaining motors and motor segments. Conduct operations involved with preparing LSRMs and motor segments using approved receipt-to-launch procedures or other approved technical data. Unlike many explosives operating buildings which currently exist on military installations, the large motor facilities may have many direct support personnel simultaneously performing different tasks in support of the launch preparation. These personnel must be limited to the minimum number necessary to accomplish the operation. Personnel limits will be established in the operating procedures. Scheduled and unscheduled maintenance may be performed in this facility on motors and segments in the staging area. Limit maintenance of large rocket motors and motor segments in the staging area to periodic maintenance and inspections unless a hazard risk analysis indicates other operations may be safely performed. When unscheduled or unforeseen operations must be accomplished on motor segments in the staging area, the appropriate technical team will perform an operational risk assessment in accordance with AFPAM 90-902. Air Force explosives safety personnel will then evaluate and obtain approval of the safety risk assessment at the appropriate command level.

12.90.2.2. **Motor Storage Facility.** This facility is primarily used for long term storage of motors and motor segments. Keep the movement of LSRMs and motor segments into and out of storage to an absolute minimum. Hazardous operations normally performed in these facilities involve lifting and positioning LSRMs and motor segments. Selected maintenance operations may be performed in these facilities provided they are limited to periodic maintenance inspections using approved procedures. Unscheduled operations, such as repairs or the correction of discrepancies found during periodic inspections, may be performed in these facilities if a risk assessment concludes it is less hazardous to perform the maintenance in the facility than to move the segment to another isolated facility. If Government resources are at risk, the wing commander or equivalent commander must approve the task before it begins. If only commercial resources are at risk, risk assessment is the responsibility of the commercial operator. Use only commander approved and safety reviewed/approved procedures when maintaining or repairing LSRMs and motor segments.

12.90.3. MAJCOMs will determine whether two operations involving LSRM's are dissimilar with respect to the hazards presented hence require ILD separation. Factors to consider when making this determination are:

12.90.3.1. The explosive characteristics and quantities of explosives involved in each operation.

12.90.3.2. The end use of the LSRM's undergoing preparation.

12.90.3.3. The make up of the teams performing the operations (e.g. Will the same team be performing both operations).

12.90.4. When contractor owned LSRM's undergoing preparation might be used for both DoD or commercial payloads of dissimilar programs and are within ILD, risk analysis and acceptance must be accomplished and approved by the responsible contract program offices and installation commander.

12.90.5. LSRM's earmarked for DoD weapons or specific missions directed by presidential mandate in support of national defense (currently Minuteman III and Missile Defense Agency resources) must be separated from non-DoD assets by IBD.

12.91. Safety Control Area. A safety control area is an area where personnel and equipment exposure is controlled in order to limit the risk from hazardous explosives operations. For LSRM segments, the safety control area is generally a circular area centered where the ordnance task is taking place; it has a radius of IBD based on the quantity of explosives which may become involved in a mishap. Certain engineering controls may allow a reduction or modification in the size of the safety control area. Only one hazardous explosives operation may take place in a safety control area at a time. Personnel required to be in the safety control area during an explosives operation will be considered essential personnel; conversely, people who do not meet this definition will be considered non-essential.

12.92. Simultaneous Operations. The large size of motor segments allows multiple operations to be easily conducted simultaneously on a single element, but the potential hazards that one task may present to another task must be carefully assessed before allowing more than one operations to proceed. Personnel performing processing or maintenance tasks on LSRM segments must be aware of other tasks that may be in progress on the same segment. Only a single operation may be performed within the same safety control area at a time.

12.93. Barricades. Use barricades with fixed storage tanks to prevent high velocity fragments from a ground liquid fuel propellant vapor phase confined explosion striking a test vehicle on the test stand. Design these barricades according to the criteria in paragraph 6.15.

12.94. Space Launch Complex. A space launch complex consists of a group of related facilities used for launching space vehicles. Facilities generally included are the launch pad(s), liquid propellant storage tanks, site instrumentation facilities, engineering personnel support buildings and a blockhouse. Additional facilities could also include LSRM facilities and spacecraft processing facilities. A launch complex normally involves a variety of explosive hazards, the result of the presence of various quantities of liquid and solid propellants which can produce both mass fire and detonation explosive hazards. System safety engineering hazard analyses of the complex must be performed to identify the various explosive hazards, their relationships, the safety threat zones and launch area location. . Quantity Distance criteria is found in paragraph 12.97.

12.95. Space Test Facilities. Space test facilities normally consist of a wide array of test resources to support customers including flight hardware (ballistic, space, sounding rocket

launch vehicles and satellites) and ground systems (field test, assembly and storage, launch, and on-orbit test facilities). A space test facility typically includes liquid propellant storage tanks or test site instrumentation, facility engineering personnel support buildings and a control center. The facilities normally involve a variety of liquid and solid propellants which can produce both mass fire and detonation explosive hazards. System safety engineering hazard analyses of the facilities must be performed to identify the various hazards, their relationships, the safety threat zones, etc.

12.96. Risk Management. Use the principles of Risk Management (RM) found in AFPAM 90-902, and the standard practices in Mil-Std 882, *Systems Safety Program Requirements,* to identify and assess potential hazards, then to determine and implement controls to minimize the risks associated with operations involving LSRMs and motor segments.

12.96.1. The major hazards associated with space launch vehicles and missile prelaunch and propulsion test operations involve large quantities of propellants used in propulsion systems, destruct charges, and high pressure gas systems.

12.96.2. Perform hazard assessments to measure the potential for and consequences of mishaps resulting from the undesired release of energy or inhibiting the desired release of energy. Use these assessments to define the maximum credible event (MCE).

12.96.3. Assess all launch vehicle operations to evaluate the hazards and determine the mitigating activities necessary to achieve an acceptable level of risk, both for personnel and the launch or test site.

12.96.4. Determine the expected risk before beginning any potentially hazardous operation and get approval from the appropriate supervisory level before proceeding. Risk analyses must show that the potential benefits outweigh the cost in terms of overall risk before the operation may be approved.

12.96.5. Credible Failure Modes. In order to determine the potential threat that a given launch vehicle and support system configuration poses during prelaunch or propulsive test operations, credible failure modes must be defined. The specific failure mode that occurs will have a large influence on the explosive yield and the resultant blast overpressure, fragmentation, and thermal effects and thus on the severity of the accident environments, risk to personnel, and damage to facilities. General scenario categories include the following phases and operations:

12.96.5.1. Prelaunch and Test Operations:

12.96.5.1.1. Storage

12.96.5.1.2. Handling

12.96.5.1.3. Assembly

12.96.5.1.4. Checkout (at the assembly building and at the launch or test complex)

12.96.5.1.5. Final Assembly

12.96.5.1.6. Ordnance Installation

12.96.5.1.7. Propellant Loading

12.96.5.1.8. All-up Vehicle Checkout (prior to launch and static firing)

12.96.6. General Failure Modes. Handle the failure modes for liquid propellants and solid propellants separately because their geometric and chemical configurations are different. In the case of solid propellants, the fuel and oxidizer are already mixed homogeneously, therefore the failure scenarios do not have to account for mixing. Liquid propellants, on the other hand, are configured in separate storage or launch vehicle tanks, therefore the failure scenarios must account for the type, amount, and probability of mixing propellants.

12.96.7. Typical Prelaunch Failure Mode Scenarios:

12.96.7.1. **Storage**

12.96.7.1.1. Liquid propellant scenarios primarily involve leaking or ruptured propellant tanks caused by loss of pressure control, insulation deficiencies, mechanical damage, and corrosion. Fuel and oxidizers are normally stored separately, so a maximum credible event would be limited to a fire and tank pressure rupture.

12.96.7.1.2. Solid propellant accident scenarios can be defined by the hazard classification grouping - 1.1 mass detonation, or 1.3 - mass fire. The most likely candidates to cause accidental ordnance initiation are introduction of stray electrical energy, fire, and dropping the segment with sufficient impact force to initiate the propellant or destruct charge if present.

12.96.7.2. **Handling.**

12.96.7.2.1. Handle liquid oxidizer and fuel separately using independent closed loop systems. Normally, differential pressure is used to transfer product from one holding tank to another or to load a launch vehicle. Typical accident events are limited to system leaks, vent and scrubber failures, or at worst, a tank rupture caused by over- or under-pressurization. Launch vehicle propellant loading scenarios are discussed in another section. Load liquid propellants serially to further reduce prelaunch mixing hazards.

12.96.7.2.2. Solid propellant rocket motors are handled by lifting with cranes or erectors at static test stands, the launch mount, in a processing facility, or by various transportation modes. Typically the MCE scenario involves vehicle rollover, or drop impacts during lifting or transportation. Drop impacts on hard surfaces can cause propellant ignition.

12.96.7.3. **Booster Assembly.**

12.96.7.3.1. Launch vehicle assembly processes normally do not involve liquid propellants.

12.96.7.3.2. Assembly operations for solid propellant rocket motors typically involve the same credible accident scenarios as those listed for handling.

12.96.7.4. **Booster Checkout.** Booster checkout normally does not impose additional hazards above and beyond those already listed except that the potential for inadvertent ignition of electro-explosive devices (EEDs) or inadvertent function of propellant system isolation valves is increased during certain electrical system checkouts. At-pad or test stand checkout normally is accomplished after solid propellant and hypergolic propellant stages are assembled and loaded, therefore, multi-faceted threats exist with interaction

between hypergolic and solid propellants that can result in fires, pressure ruptures, and propulsive flight.

12.96.7.5. **Final Assembly.** The launch booster, upper stages, and payload final assembly process normally is accomplished on the launch pad. Both solid propellants and hypergolic liquid propellants are present during the final assembly steps. A major threat involves the assembly and encapsulation of spacecraft and upper stages in facilities off the launch complex. These operations normally involve hypergolic propellants loaded in separate propellant tanks. Credible accident scenarios include puncture of one or more of the propellant tanks during assembly or checkout, impact caused by lifting, failure resulting in a dropped system, or over- or under pressurization. Since these propellants are hypergolic; the potential exists for a fire if the fuel comes into contact with an oxidizer. Another major threat involves the toxicity of these propellants. Credible accident scenarios primarily involve handling, lifting, and mating stages with tank rupture accident scenarios the result of impacts caused by improper handling or dropping one or more stages. The results are the same as those listed above.

12.96.7.6. **Ordnance Installation.** Ordnance installation may take place in an off-the-pad assembly building or on the launch pad. During and after installation, credible accident scenarios primarily involve inadvertent ignition of EEDs. These devices must not be capable of detonating either the solid or liquid propellant. Inadvertent ignition of these devices can result in significant damage to the vehicle and severe injury or death to personnel. Unless unavoidable, do not load cryogenic liquid propellants on a launch vehicle until after ordnance is installed.

12.96.7.7. **Propellant Loading.** Maximum credible event accident scenarios during propellant loading involve over- or under-pressurization of the propellant tanks and major spills of fuel and oxidizer. These scenarios can result in a significant explosive yield.

12.96.7.8. **All-Up Vehicle Checkout.** This occurs prior to launch or static firing. During this phase of prelaunch operations the final liquid propellant topping off is completed and in some cases the liquid propellant and high pressure gas systems are brought to flight pressure. All systems are switched to internal power and final systems checks are performed. The MCE involves the fully loaded launch vehicle and payload. Explosive yield is based on static conditions for shock impact on solid propellants and non-dynamic mixing of liquid propellant either by the Confined by Missile (CBM) mode or the Confined by Ground Surface (CBGS) mode.

12.97. Space and Intercontinental Ballistic Missile Criteria.

12.97.1. Some launch pad facilities such as mobile service towers, umbilical mast towers, launch ducts, blockhouse, and launch mounts are identified by a building number on the base master plan. But, for the purpose of explosive site planning, they are considered an “integral part of the facility” and do not require exposed site separation distances due to the nature of their function. Likewise, facilities that provide direct support to these launch pads such as maintenance and build-up shops, pressurization systems, instrumentation terminal rooms, etc., are an integral part of the facility and do not require QD separation distances from the pads they support.

12.97.2. Technical support areas may be associated with these facilities. Locate all direct support personnel at no less than IL distance or equivalent protection from the PES and dispatch them to the PES as required.

12.97.3. Locate any parking lots (GOV or POV) which exclusively serves the motor or motor storage, staging, or operations facility according to Chapter 12.

12.97.4. Locate launch complexes at Air Force launch ranges using two sets of criteria. The first set is based on QD criteria. They address pre-launch operations (including pressurized launch rehearsal) and static explosive threats. These will be defined for each facility in the explosives safety site plan. The TNT equivalencies to be used are included in Table 12.17. The second set of criteria used to locate a launch complex on the range address launch and space vehicle dynamic flight. Range safety guidance will define the criteria and flight safety analysis techniques required to determine the down range explosive threat resulting from a launch.

12.97.4.1. Separate new launch pads by at least an IL distance from each other. The larger NEW of the two launch vehicles will dictate the minimum separation between the two launch pads. For HD 1.1 launch vehicles, the minimum separation required is K-18. For HD 1.3 launch vehicles, Table 12.3, IL column. Hazardous operations in one facility may impact operations in another related facility. In order to protect personnel, IB quantity distance criteria between launch pads shall be considered for new construction, as opposed to IL distances.

12.97.4.2. Determine launch complex locations in the range launch area based on flight safety analyses including risk analysis such as the Launch Area Risk Analysis (LARA) program and other flight safety techniques described in range safety guidance. The Range Safety Office responsible for a launch area will consider explosive siting and missile flight hazards when determining the location of a launch complex in relationship with other launch complexes and support facilities.

12.97.4.3. For QD purposes, measure from the explosives at the launch mount, for a launch complex and at the test stand, for a test complex.

12.97.5. **Space Test Facilities.** During explosives site planning for new motor or motor segment test operation facilities, provide a personnel direct support facility at least ILD from the PES. Note: This separate location will permanently house direct support personnel for the PES. It will be a dispatch point, break room, and change room for these personnel. These direct support personnel facilities may be located at closer than IL distances if protective measures are used to provide minimum required overpressure and fragment protection. Use the prevailing wind direction as a primary consideration when locating test stands in relationship to other facilities that will be inhabited during testing. Non-DoD LSRM test facilities on Air Force installations must not hazard Government assets. Use Table 12.29. to determine siting criteria for non-DoD activities.

12.97.6. **Static Test Facilities.** Site and construct static test facilities for maximum flexibility to meet frequently changing technological requirements. A typical static test facility will have several test stands that share common support facilities such as ready storage tanks, pressurization systems, test control rooms, maintenance support and build-up shops, and steam-generating vacuum systems. To the extent possible, separate test stands by

intraline distance. In some cases test support requirements, such as vacuum testing, do not support QD separation if test objectives are to be achieved. To minimize the risk to adjacent test stands, only one test stand will be used at a time when QD requirements cannot be met. Remove or protect all equipment not being used to support current test operations, or obtain a waiver approved at the appropriate level. See Chapter 1 for waiver or exemption procedures.

12.97.7. **Building and Use of Non-DoD Space Explosives Facilities on Air Force Installations and Non-DoD Use of Existing Government Facilities.** Air Force guidance permits a non-DoD space user to lease land on an Air Force installation and construct explosives facilities to support non-DoD and Government space operations. Additionally, a non-DoD space user may be granted a license to use an existing Government explosives facility. These facilities include but are not limited to explosives storage facilities, explosives operations facilities, missile launch pads, test facilities, and combinations thereof. Use Table 12.29. for QD criteria for siting non-DoD activities.

12.97.8. **DoD Explosives Hazard Classification.** Apply DoD explosives hazard classifications to explosives stored or used on military installations and reflect them in all applicable facility explosives site plans. For commercial explosive items that have not been acquired and adopted for use by the Air Force, but will be stored and transported on an Air Force installation in conjunction with commercial launch programs, the following exceptions may be applied:

12.97.8.1. The items may be offered for transportation off the installation via commercial carriers using hazard classification approvals issued to the item manufacturers by the Department of Transportation (DOT).

12.97.8.2. An item may be stored, handled, and transported on the installation using the hazard classification approval issued by DOT if the local commander reviews and concurs with that hazard classification, except for articles assigned to hazard class/division 1.2. These must be stored and handled as DoD hazard class/division 1.1. Obtain approval to store non-DoD commercial items as hazard class/division 1.2 from a DoD hazard classification authority listed in TO 11A-1-47.

12.97.9. **Expanding QD and Risk Assessment.** Problems are encountered around launch pads and test stands where lack of real estate coupled with a high concentration of people, facilities, and equipment make compliance with QD standards impossible. Explosive content of a launch pad or test stand varies according to a well defined operational concept and the maximum NEW is typically present only during a short period of time just before launch or test. This allows management to take actions to protect or remove resources and personnel as the NEW is increased.

12.97.10. **Expanding QD.** Expanding QD is a process available to commanders similar to tiered siting which allows them to analyze and minimize risk to personnel, facilities, and operational capabilities. Expanding QD is a risk-based management tool that provides an organized way to evaluate risks and assess action that will mitigate the impact of an explosive mishap during periods of increased activity. In an expanding QD system, a launch pad or test stand may have different NEWs during different stages of prelaunch or test missile buildup. To maximize protection under the expanding QD approach, the responsible commander will develop and publish procedures to ensure non-essential equipment, supplies, and personnel are removed prior to increasing NEW limits.

12.97.11. **Procedures for Expanding QD Risk Management.** Determine launch pad or test stand NEW for various stages of launch vehicle buildup. For each stage, evaluate all ESs that are within the QD arc generated by the NEW. If QD criteria is not violated in the largest arc, submit a site plan for the maximum NEW. If violations exist, the following actions are required:

12.97.11.1. Evacuate non-direct support personnel from an ES falling within the QD arc generated by the NEW. A waiver or exemption is required if the ES cannot be evacuated

12.97.11.2. Publish procedures to minimize risk for stage with QD violations. Guidelines must specify:

12.97.11.2.1. The organization responsible for implementing risk reduction actions.

12.97.11.2.2. Conditions under which risk reduction actions will be directed and when they will take place.

12.97.11.2.3. On-scene inspection procedures to ensure risk management actions are being accomplished.

12.97.11.2.4. Facilities to be evacuated

12.97.11.2.5. Critical equipment and supplies to be protected or evacuated

12.97.11.2.6. Procedures to ensure the program is evaluated on a recurring basis.

12.97.11.3. On the site plan, clearly label the different QD arcs associated with the different NEW levels.

12.97.12. **Blockhouse Requirements.**

12.97.12.1. **Launch Complex Blockhouse.** In general, the Air Force is moving away from the use of hardened blockhouses located at launch complexes in favor of soft, remote launch control centers. Until all operations requiring on-site manning in the blockhouse during launch are moved to remote locations, ensure blockhouse personnel are protected to a reasonable degree of safety. In the event of detonation of a launch vehicle on the launch pad or shortly after lift-off, the blockhouse must be able to withstand a direct impact of the largest expected amount of explosive debris and also the over-pressure resulting from the initial explosion and from subsequent explosions of firebrands landing nearby.

12.97.12.2. **Test Control Blockhouse.** Blockhouses for static test stands can either be unprotected facilities at K-24 for the maximum propellant load, or be hardened facilities capable of providing K-24 overpressure protection and fragment protection from the maximum propellant load.

Figure 12.1. Hazard Zones for ECMs.

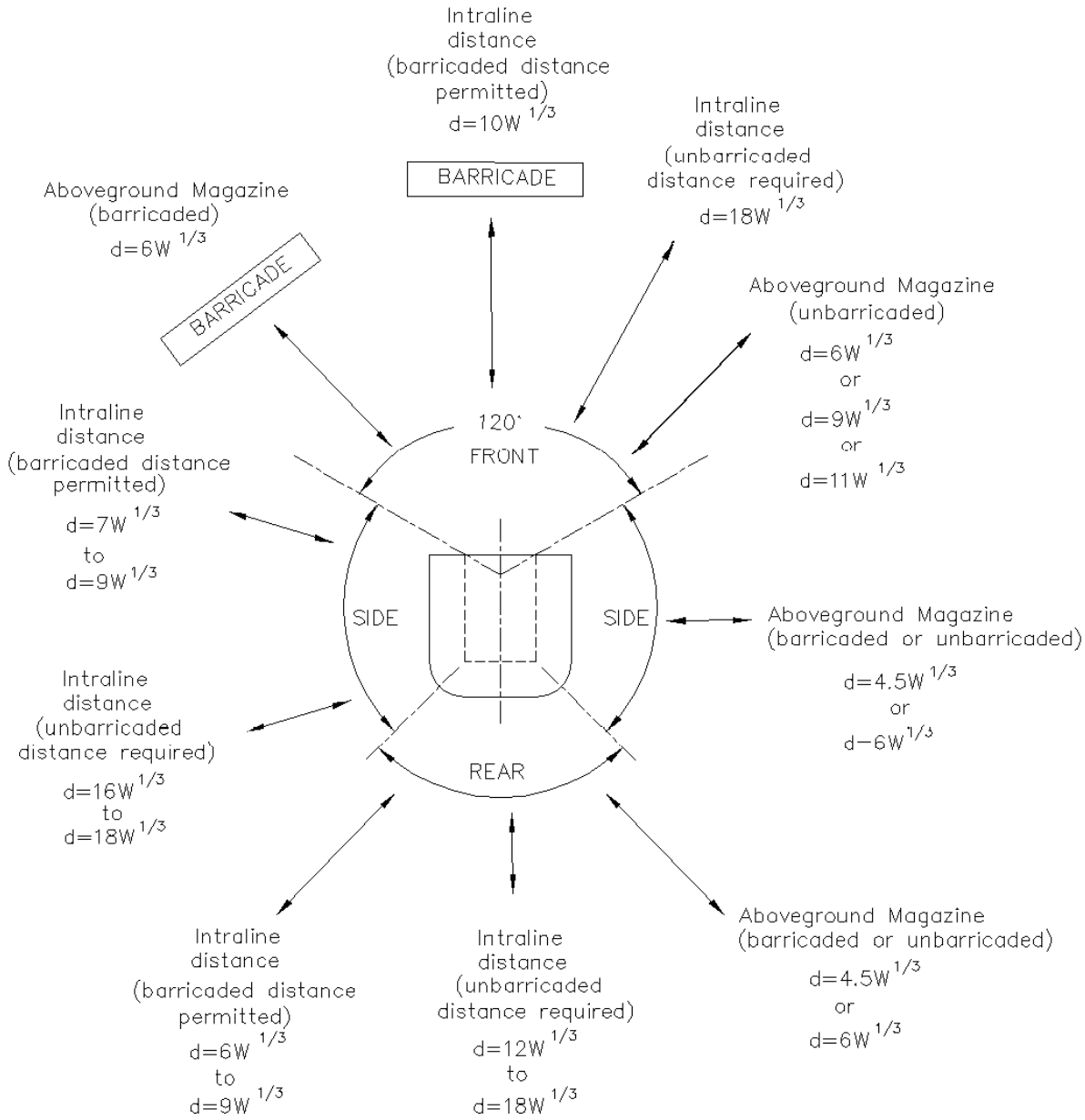

NOTES:

1. See paragraph 12.24 for application of intraline distances from an ECM.
2. See paragraph 12.24 and 12.25 for application of barricaded IMD and ILD from an ECM.
3. See table 12.1 for application of intermagazine distances between ECM and Aboveground Magazines.

ECM Orientation Effects on Barricaded and Unbarricaded IMD and ILD.

Figure 12.2. ECM Orientation Effects on IMD.

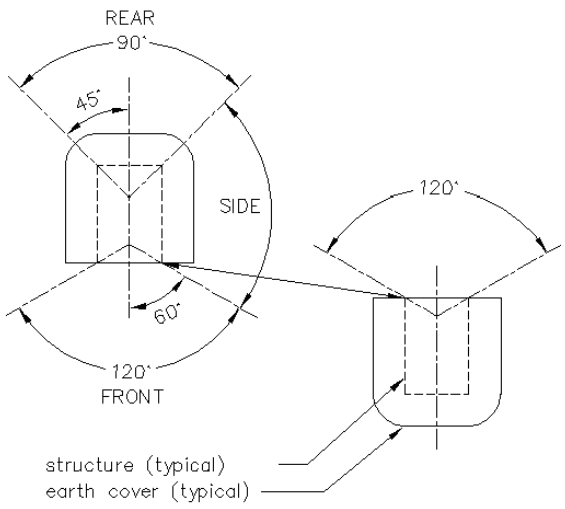

Fig 12.2A ECM Orientation Effects on IMD: Side–to–Side Orientation (see pararaph 12.25)

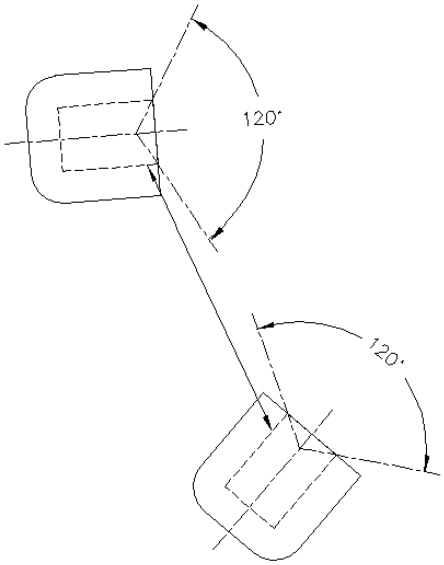

Fig 12.2B ECM Orientation Effects on IMD: Side–to–Side Orientation (see pararaph 12.25)

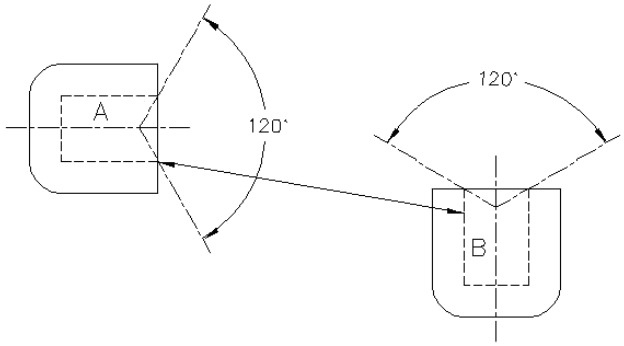

NOTES:

Site A as a Side–to–Front (unbarricaded) ES
Site B as a Front (unbarricaded)–to–Side ES

Fig 12.2C ECM Orientation Effects on IMD (see pararaph 12.25)

Figure 12.2. ECM Orientation Effects on IMD (Continued).

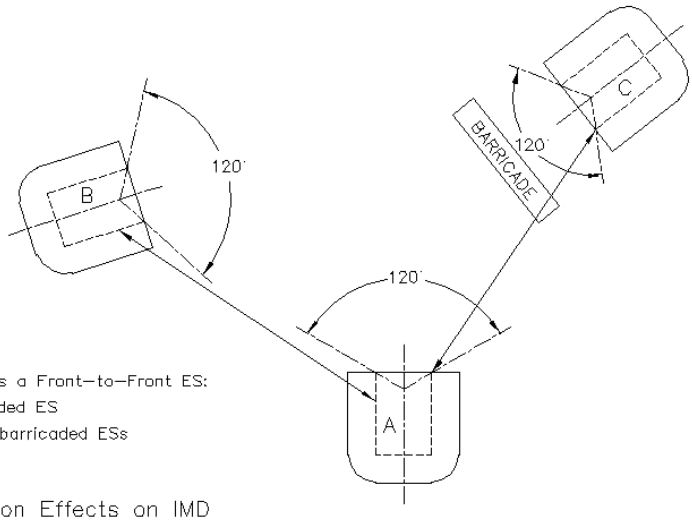

NOTE:

1. Site each magazine as a Front–to–Front ES:
   Site C as a Barricaded ES
   Site A and B as unbarricaded ESs

Fig 12.2D ECM Orientation Effects on IMD (see pararaph 12.25)

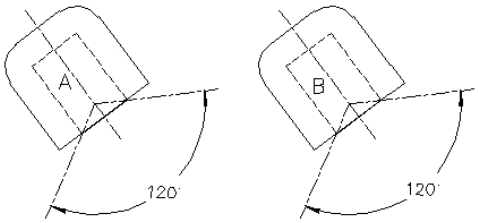

NOTES:

1. Site A as a Side–to–Front (unbarricaded) ES.
2. Site B as a Front (unbarricaded)–to–side ES.

Fig 12.2E ECM Orientation Effects on IMD: Canted ECM (see pararaph 12.25)

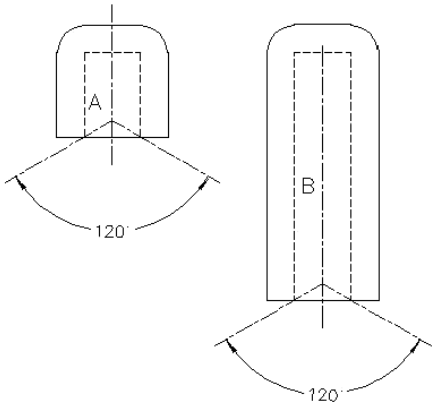

NOTES:

1. Site A as a Side–to–Front (unbarricaded) ES.
2. Site B as a Front (unbarricaded)–to–side ES.

Fig 12.2E ECM Orientation Effects on IMD: ECM of Significantly Different Lengths (see pararaph 12.25)

Figure 12.3. Hazard Zones for HASs.

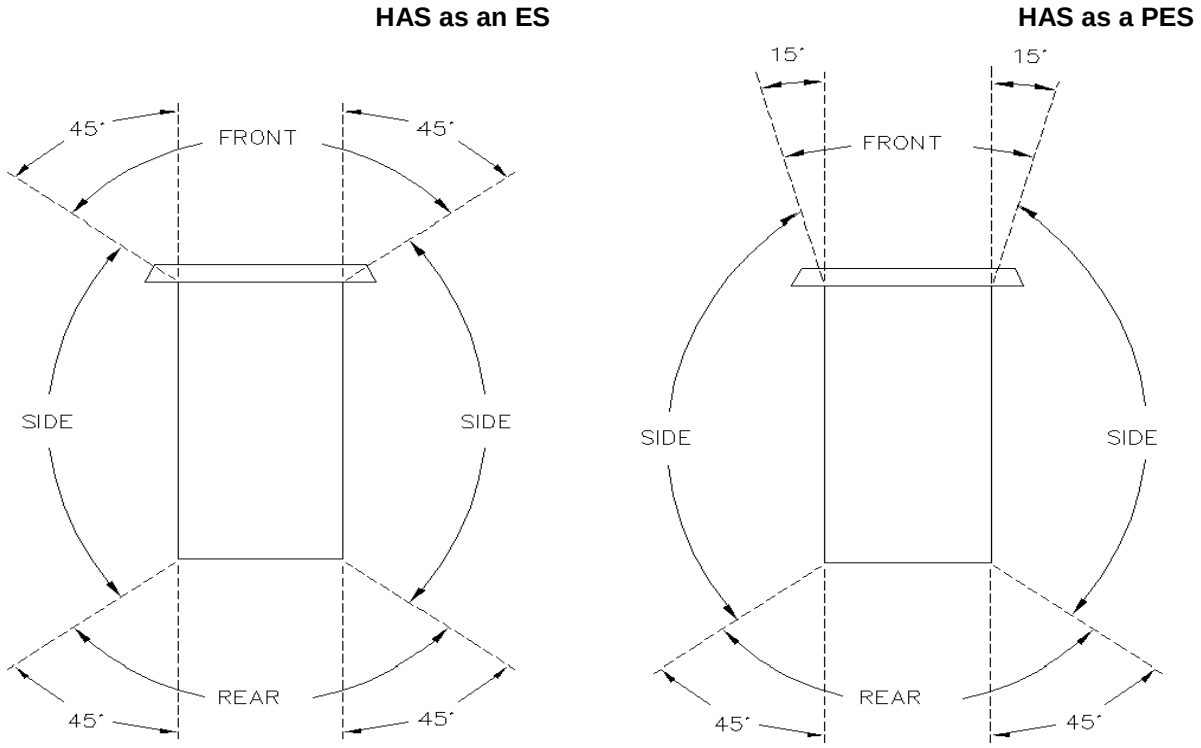

Figure 12.4. F-15 Aircraft QD Separation Distances for Selected AIM/AGM Series Missile Configurations.

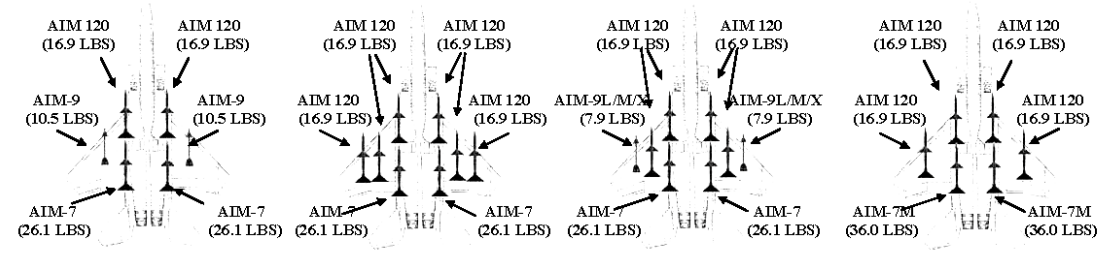

F-15
CONFIG: 1
NEW: 107
IM: 53' IL: 86'
IBD: 700'
PTR: 420'

F-15
CONFIG: 2
NEW: 153.6
IM: 59' IL: 97'
IBD: 760'
PTR: 456'

F-15
CONFIG: 3
NEW: 135.6
IM: 57' IL: 93'
IBD: 700'
PTR: 420'

F-15
CONFIG: 4
NEW: 139.6
IM: 57' IL: 94'
IBD: 700'
PTR: 420'

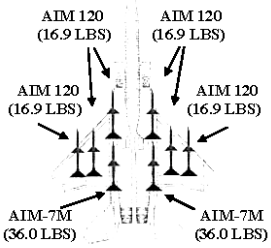

F-15
CONFIG: 5
NEW: 173.4
IM: 62' IL: 101'
IBD: 760'
PTR: 456'

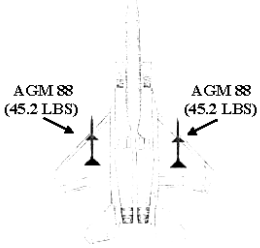

F-15
CONFIG: 6
NEW: 90.4
IM: 50' IL: 81'
IBD: 400'
PTR: 240'

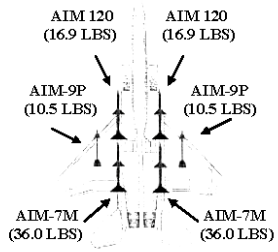

F-15
CONFIG: 7
NEW: 126.8
IM: 56' IL:91'
IBD: 600'
PTR: 360'

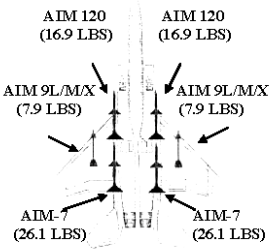

F-15
CONFIG: 8
NEW: 101.8
IM: 52' IL: 85'
IBD: 700'
PTR: 420'

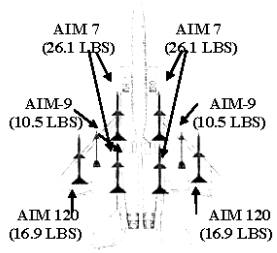

F-15
CONFIG: 9
NEW: 159.2
IM: 60' IL: 96'
IBD: 700'
PTR: 420'

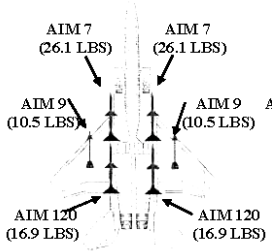

F-15
CONFIG: 10
NEW: 107
IM: 53' IL: 86'
IBD: 700'
PTR: 420'

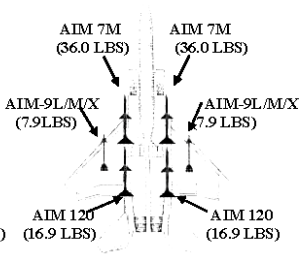

F-15
CONFIG: 11
NEW: 121.6
IM: 55' IL: 90'
IBD: 600'
PTR: 360'

Note: IM or IL criteria for the internal HD 1.2 gun ammunition and internal HD 1.3 flares do not need to be considered with these loads. The AIM-120s shown are for the 16.9 pound warhead only. AIM-120 models C4/C5 have 19 pound warheads and will require new missile configuration requests in accordance with paragraph 12.49. AIM-7s shown are 7Ms or 7Fs with WAU-10 warheads. AIM-7Ms depicted have WAU-17 warheads.

Figure 12.5. F-16 Aircraft QD Separation Distances for Selected AIM/AGM Series Missile Configurations.

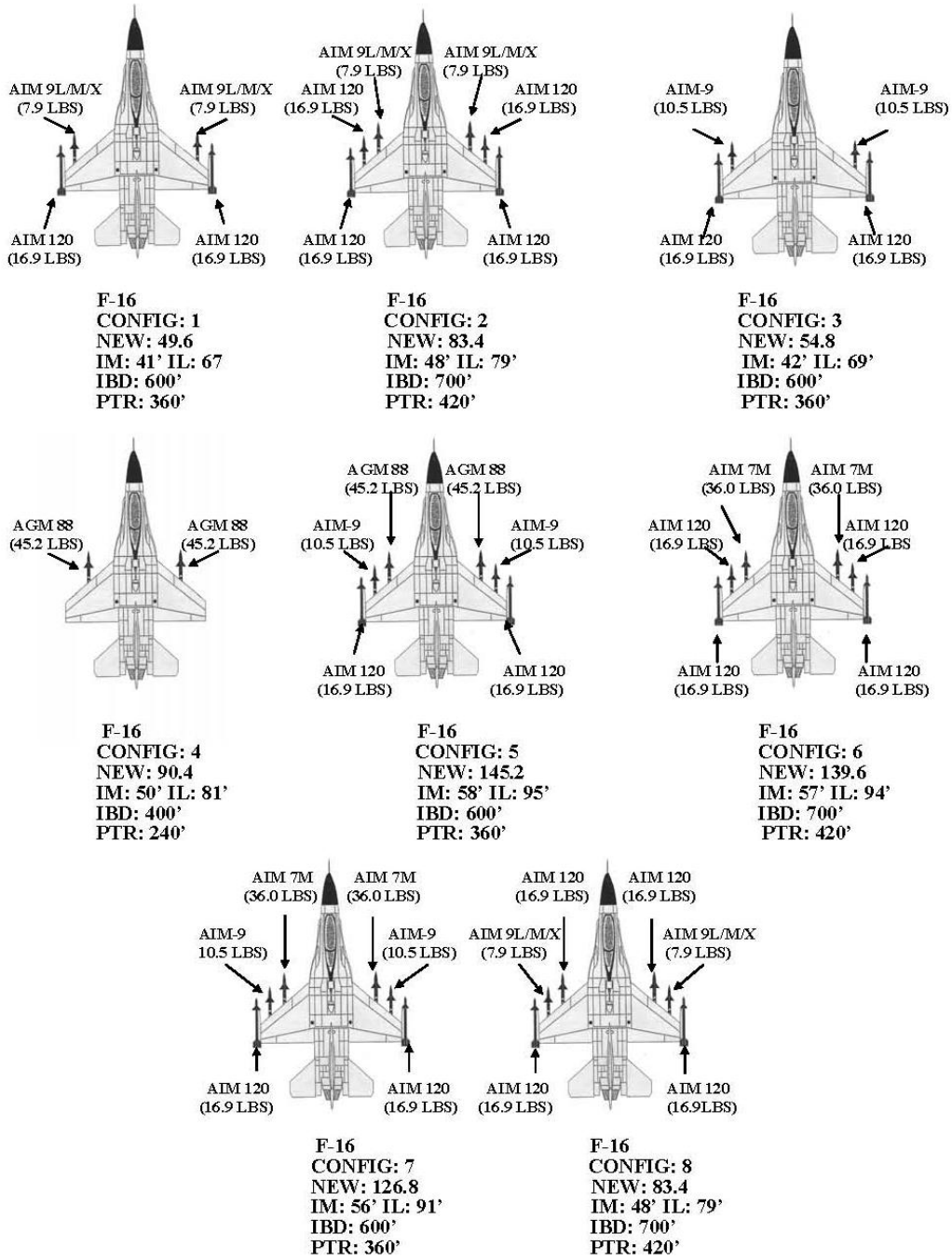

Note: IM or IL criteria for the internal HD 1.2 gun ammunition and internal HD 1.3 flares do not need to be considered with these loads. The AIM-120s shown are for the 16.9 pound warhead only. AIM-120 models C4/C5 have 19 pound warheads and will require new missile configuration requests in accordance with paragraph 12.49. AIM-7Ms depicted have WAU-17 warheads.

Figure 12.6. Reduced MCEs and QDs for F-15 Aircraft in the Open 1,2,3,4,5

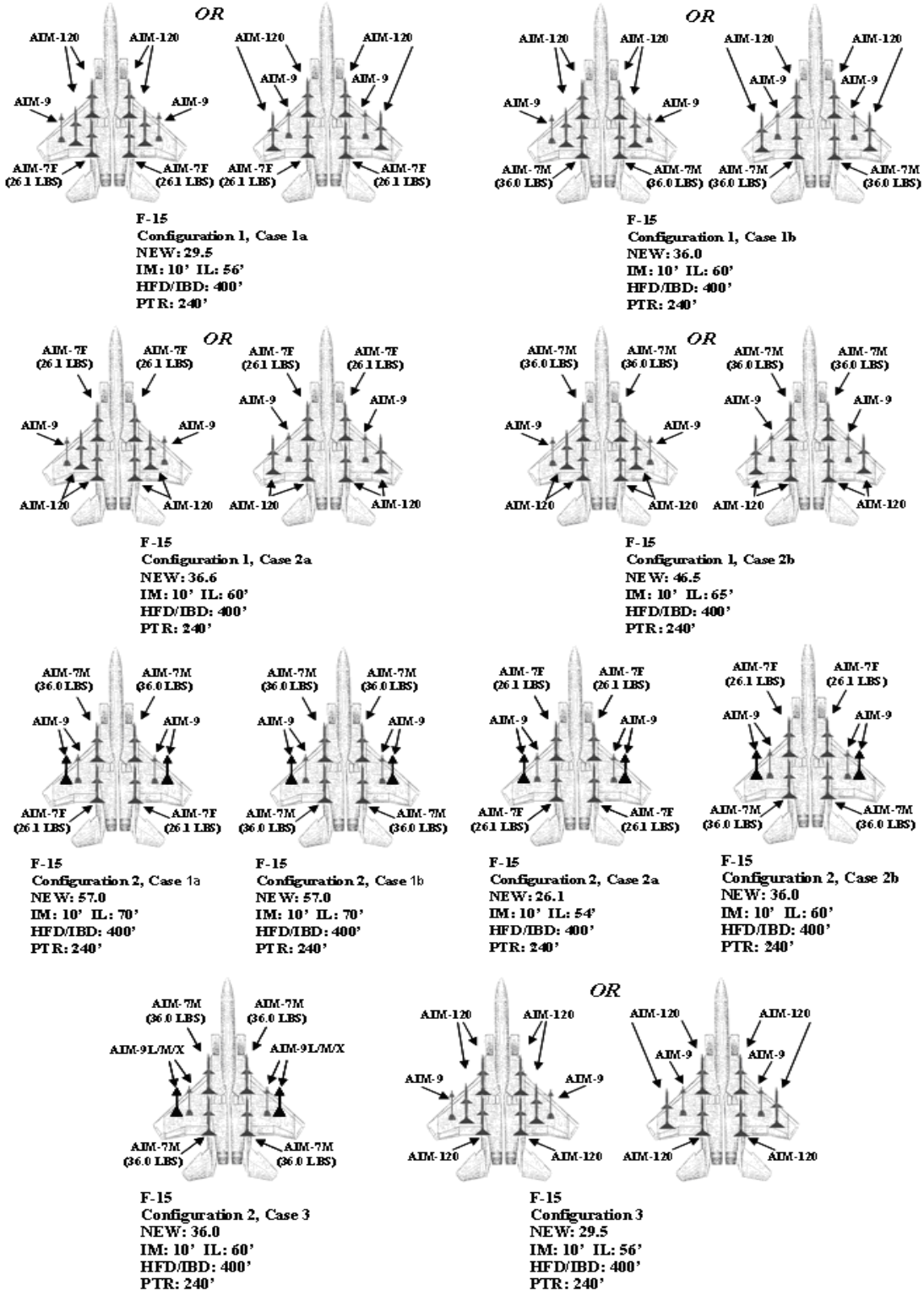

Note 1: Use of this figure is only allowed if no single trailer servicing the aircraft would present an MCE greater than the MCE used to generate the aircraft QD arcs. In most cases, this means that the trailer cannot be loaded with more than the MCE of missiles. Where test results permit,

such as in the case of a single layer of AIM-120 missiles loaded in alternating directions on a single trailer, reduced trailer MCEs may be applied. In that specific case, the trailer MCE is a single AIM-120 missile. IM or IL criteria for the internal HD 1.2 gun ammunition and internal HD 1.3 flares do not need to be considered with these loads.

Note 2: Configuration numbers do not correspond to configuration numbers in Figure 12.7.

Note 3: Unless otherwise specified,

- AIM-120s must be AIM-120, WDU-33/Bs and/or AIM-120, WDU-41/Bs
- AIM-9s must be AIM-9L/M/X WDU-17s 7.9lb Warheads and/or AIM-9P, 10.5lb Warheads
- AIM-7s must be AIM-7M, WAU-17s and/or AIM-7F, WAU-10s (treat AIM-7M with WAU-10 as AIM-7F in the table)

Note 4: Subsets of any configuration are acceptable as long as remaining missiles match type and location shown in the configuration.

Note 5: IM for all configurations is based on the minimum aircraft separation requirement of 10 ft. If circumstances require locating aircraft at less than this distance, then lesser IM distances may be approved by AFSC/SEW. Request approval through MAJCOM/SEW.

Figure 12.7. Reduced MCEs and QDs for F-16 Aircraft in the Open 1,2,3,4,5

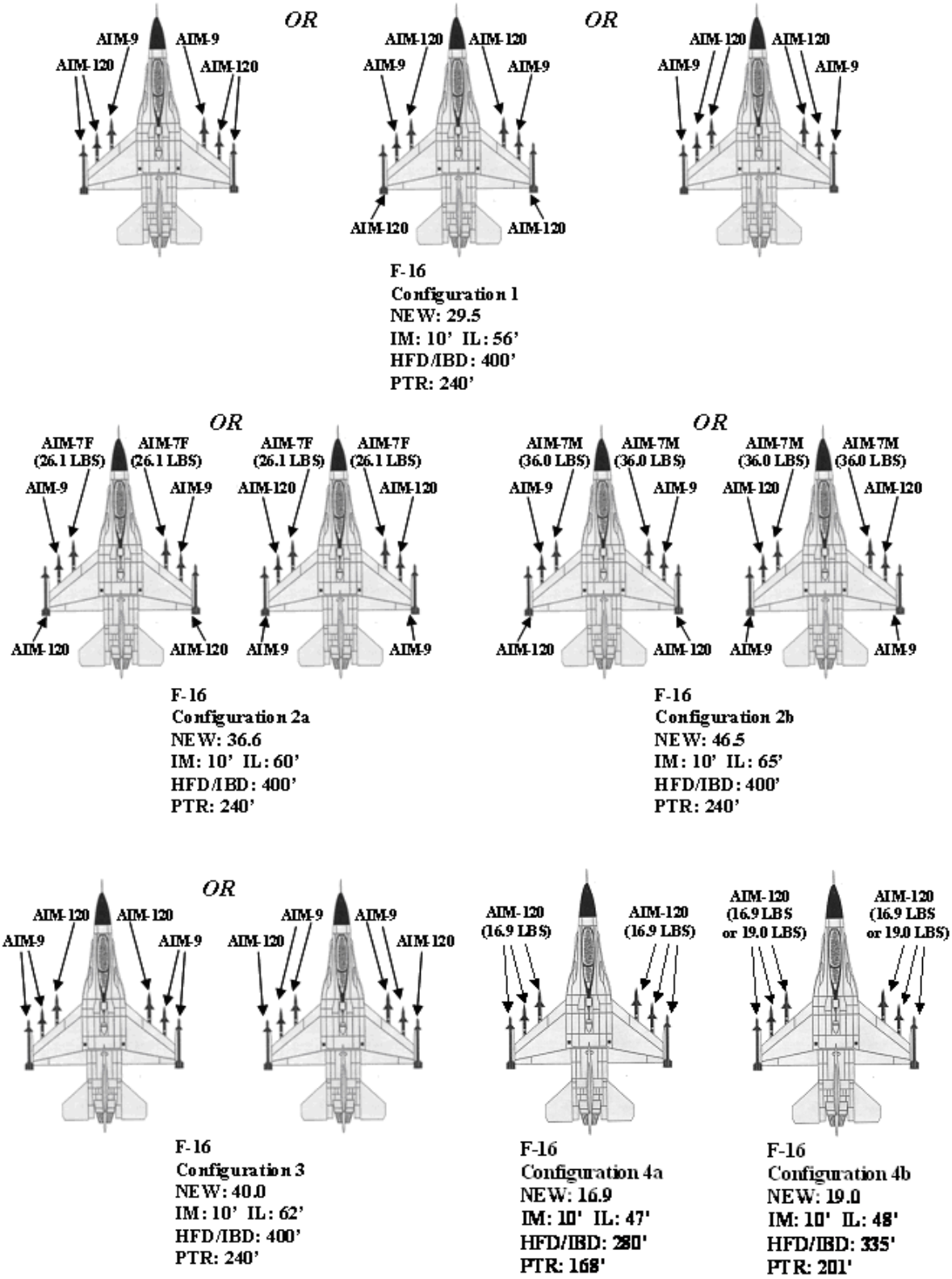

Note 1: Use of this figure is only allowed if no single trailer servicing the aircraft would present an MCE greater than the MCE used to generate the aircraft QD arcs. In most cases, this means that the trailer cannot be loaded with more than the MCE of missiles. Where test results permit, such as in the case of a single layer of AIM-120 missiles loaded in alternating directions on a single trailer, reduced trailer MCEs may be applied. In that specific case, the trailer MCE is a single AIM-120 missile. IM or IL criteria for the internal HD 1.2 gun ammunition and internal HD 1.3 flares do not need to be considered with these loads.

Note 2: Configuration numbers do not correspond to configuration numbers in Figure 12.6.

Note 3: Unless otherwise specified,

- AIM-120s must be AIM-120, WDU-33/Bs and/or AIM-120, WDU-41/Bs
- AIM-9s must be AIM-9L/M/X WDU-17s 7.9lb Warheads, and/or AIM-9P, 10.5lb Warheads
- AIM-7s must be AIM-7M, WAU-17s and/or AIM-7F, WAU-10s (treat AIM-7M with WAU-10 as AIM-7F in the table)

Note 4: Subsets of any configuration are acceptable as long as remaining missiles match type and location shown in the configuration.

Note 5: IM for all configurations is based on the minimum aircraft separation requirement of 10 ft. If circumstances require locating aircraft at less than this distance, then lesser IM distances may be approved by AFSC/SEW. Request approval through MAJCOM/SEW.

Figure 12.8. Fragment Zones for General Purpose Bombs.

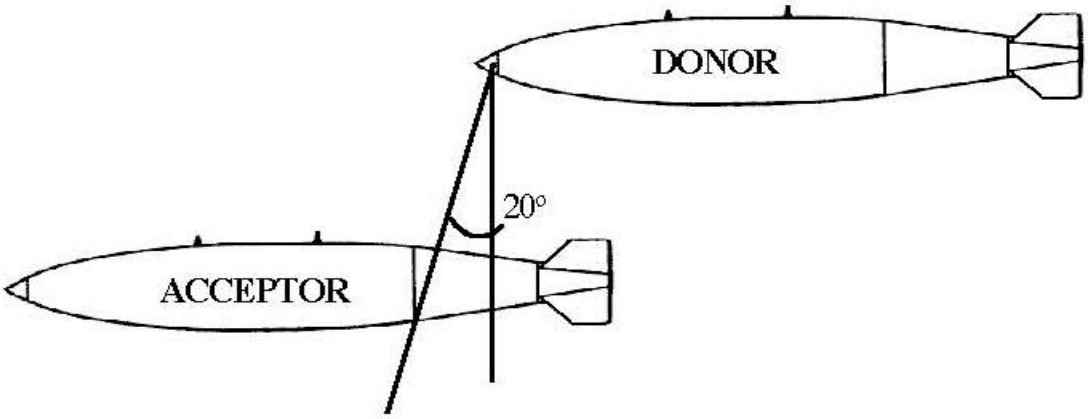

Table 12.1. HD 1.1 QD Criteria Notes (12) (24)

	COLUMN		1	2	3	4	5	6	7	8
LINE	TO: EXPOSED SITE (ES)	FROM: POTENTIAL EXPLOSION SITE (PES)	EARTH COVERED MAGAZINE (4)				ABOVE GROUND MAGAZINE (6)		BARRICADED MODULES	
			S	R	FB (3)	FU	B (3)	U	B (5)	U
1	EARTH COVERED MAGAZINE (7-BAR) (4)	S	K1.25	K1.25	K2.75	K2.75	K4.5	K4.5	K4.5	K4.5
2		R	K1.25	K1.25	K2	K2	K4.5	K4.5	K4.5	K4.5
3		FU	K2.75	K2	K6	K6	K6	K6	K6	K6
4		FB (3)	K2.75	K2	K4.5	K6	K4.5	K6	K4.5	K6
5	EARTH COVERED MAGAZINE (3-BAR) (4)	S	K1.25	K1.25	K2.75	K2.75	K6	K6	K6	K6
6		R	K1.25	K1.25	K2	K2	K6	K6	K6	K6
7		FU	K4.5	K4.5	K6	K9	K6	K9	K6	K9
8		FB (3)	K4.5	K4.5	K6	K6	K6	K6	K6	K6
9	EARTH COVERED MAGAZINE (UNDEFINED) (4)	S	K1.25 (1) K2 (2)	K1.25 (1) K2 (2)	K4.5 (1) K6 (2)	K4.5 (1) K6 (2)	K6	K6	K6	K6
10		R	K1.25	K1.25	K2	K2	K6	K6	K6	K6
11		FU	K6	K6	K6	K11	K6	K11	K6	K11
12		FB (3)	K6	K6	K6	K6	K6	K6	K6	K6
13	ABOVE GROUND MAGAZINE (6)	U	K6	K6	K6	K11	K6	K11	K6	K11
14		B (3)	K6	K6	K6	K6	K6	K6	K6	K6
15	BARRICADED MODULES	U	K6	K6	K6	K11	K6	K11	K1.1 (7)	K11
16		B (5)	K1.25	K1.25	K6	K6	K6	K6	K1.1 (7)	K1.1 (7)
17	OPERATING LOCATION	U	ILD (8)	ILD (8)	ILD (8)	ILD (8)	ILD (10)	ILD (10)	ILD (10)	ILD (10)
18		B (3)	ILD (9)	ILD (9)	ILD (9)	ILD (9)	ILD (11)	ILD (11)	ILD (11)	ILD (11)
19	COMBAT AIRCRAFT PARKING AREA	SINGLE A/C	(13)	(13)	(13)	(13)	(13)	(13)	(13)	(13)
20		A/C GROUP								
21	EXPLOSIVES CARGO AIRCRAFT PARKING AREA		(13)(16)	(13)(16)	(13)(16)	(13)(16)	(13)(16)	(13)(16)	(13)(16)	(13)(16)
22	FLIGHTLINE MUNITIONS HOLDING AREA		K6	K6	K6	K11	K6	K11	K6	K11
23	FIRST GENERATION HARDENED AIRCRAFT SHELTER (30) (29)	S/R	K5	K5	K8	K8	K8	K8	K8	K8
24		F	K18	K18	K18	K18	K18	K18	K18	K18
25	SECOND OR THIRD GENERATION HARDENED AIRCRAFT SHELTER (30) (29)		K5	K5	K8	K8	K8	K8	K8	K8
26	KOREAN TAB VEE (30) (29)	S	(13)	(13)	(13)	(13)	(13)	(13)	(13)	(13)
27		R	(13)	(13)	(13)	(13)	(13)	(13)	(13)	(13)
28		F	(13)	(13)	(13)	(13)	(13)	(13)	(13)	(13)
29	KOREAN FLOW-THROUGH (30)	S	(13)	(13)	(13)	(13)	(13)	(13)	(13)	(13)
30		F/R	(13)	(13)	(13)	(13)	(13)	(13)	(13)	(13)
31	FIRST GENERATION MAINTENANCE HAS (30) (29)	S/R	K5	K5	K8	K8	K8	K8	K8	K8
32		F	K18	K18	K18	K18	K18	K18	K18	K18
33	SECOND OR THIRD GENERATION MAINTENANCE HAS (30) (29)		K5	K5	K8	K8	K8	K8	K8	K8
34	NON-EXPLOSIVES AIRCRAFT PARKING AREA (17)	NON-DoD	IBD (19)	IBD (19)	IBD (19)	IBD (19)	IBD (19)	IBD (19)	IBD (19)	IBD (19)
35		DoD (18)	(13)	(13)	(13)	(13)	(13)	(13)	(13)	(13)
36	MILITARY USE ONLY	RUNWAY	PTRD (19) (21)	PTRD (19) (21)	PTRD (19) (21)	PTRD (19) (21)	PTRD (19) (21)	PTRD (19) (21)	PTRD (19) (21)	PTRD (19) (21)
37		TAXIWAY	ILD (8) (21)	ILD (8) (21)	PTRD (19) (21)	PTRD (19) (21)	PTRD (19) (21)	PTRD (19) (21)	PTRD (19) (21)	PTRD (19) (21)
38	JOINT MILITARY/ NON-MILITARY USE	RUNWAY	IBD (19)	IBD (19)	IBD (19)	IBD (19)	IBD (19)	IBD (19)	IBD (19)	IBD (19)
39		TAXIWAY	PTRD (19)	PTRD (19)	PTRD (19)	PTRD (19)	PTRD (19)	PTRD (19)	PTRD (19)	PTRD (19)
40	A/C PASSENGER LOAD/UNLOAD AREA	OPEN (22)	PTRD (19)	PTRD (19)	PTRD (19)	PTRD (19)	PTRD (19)	PTRD (19)	PTRD (19)	PTRD (19)
41		STRUCTURE (23)	IBD (19)	IBD (19)	IBD (19)	IBD (19)	IBD (19)	IBD (19)	IBD (19)	IBD (19)
42	COMBAT AIRCRAFT RELATED FACILITIES		IBD (38)	IBD (38)	IBD (38)	IBD (38)	IBD (38)	IBD (38)	IBD (38)	IBD (38)
43	EXPLOSIVES CARGO AIRCRAFT RELATED FACILITIES		ILD (39)	ILD (39)	ILD (39)	ILD (39)	ILD (39)	ILD (39)	ILD (39)	ILD (39)
44	MUNITIONS STORAGE AREA RELATED FACILITIES		ILD (37)(40)	ILD (37)(40)	ILD (37)(40)	ILD (37)(40)	ILD (37)(40)	ILD (37)(40)	ILD (37)(40)	ILD (37)(40)
45	RELATED FACILITY		ILD (37)(40)	ILD (37)(40)	ILD (37)(40)	ILD (37)(40)	ILD (37)(40)	ILD (37)(40)	ILD (37)(40)	ILD (37)(40)
46	PUBLIC TRAFFIC ROUTE		PTRD (36)	PTRD (36)	PTRD (36)	PTRD (36)	PTRD (36)	PTRD (36)	PTRD (36)	PTRD (36)
47	INHABITED BUILDING		IBD (36)	IBD (36)	IBD (36)	IBD (36)	IBD (36)	IBD (36)	IBD (36)	IBD (36)

Table 12.1. HD 1.1 QD Criteria Notes (12) (24) (continued)

	COLUMN		9	10	11	12	13	14
LINE	TO: EXPOSED SITE (ES)	FROM: POTENTIAL EXPLOSION SITE (PES)	OPERATING LOCATION		COMBAT AIRCRAFT PARKING AREA		EXPLOSIVES CARGO AIRCRAFT PARKING AREA	FLIGHTLINE MUNITIONS HOLDING AREA
			B (3)	U	Single A/C	A/C Group		
1	EARTH COVERED MAGAZINE (7-BAR) (4)	S	K4.5	K4.5	USE ABOVE GROUND MAGAZINE COLUMNS		USE ABOVE GROUND MAGAZINE COLUMNS	USE ABOVE GROUND MAGAZINE COLUMNS
2		R	K4.5	K4.5				
3		FU	K6	K6				
4		FB (3)	K4.5	K6				
5	EARTH COVERED MAGAZINE (3-BAR) (4)	S	K6	K6				
6		R	K6	K6				
7		FU	K6	K9				
8		FB (3)	K6	K6				
9	EARTH COVERED MAGAZINE (UNDEFINED) (4)	S	K6	K6				
10		R	K6	K6				
11		FU	K6	K11				
12		FB (3)	K6	K6				
13	ABOVE GROUND MAGAZINE (6)	U	K6	K11				
14		B (3)	K6	K6				
15	BARRICADED MODULES	U	K6	K11				
16		B (5)	K6	K6				
17	OPERATING LOCATION	U	ILD (10)	ILD (10)				
18		B (3)	ILD (11)	ILD (11)				
19	COMBAT AIRCRAFT PARKING AREA	SINGLE A/C	(13)	(13)	(13) (14) (16)	ILD (10) (13) (15)	(13) (16)	(13) (16)
20		A/C GROUP			ILD (10) (13) (15)			
21	EXPLOSIVES CARGO AIRCRAFT PARKING AREA		(13)(16)	(13)(16)	USE ABOVE GROUND MAGAZINE COLUMNS		USE ABOVE GROUND MAGAZINE COLUMNS	USE ABOVE GROUND MAGAZINE COLUMNS
22	FLIGHTLINE MUNITIONS HOLDING AREA		K6	K11				
23	FIRST GENERATION HARDENED AIRCRAFT SHELTER (30) (29)	S/R	K8	K8	K8 (26)		K8 (27)	K8 (27)
24		F	K18	K18	K18 (25)		K18 (28)	K18 (28)
25	SECOND OR THIRD GENERATION HARDENED AIRCRAFT SHELTER (30) (29)		K8	K8	K8 (26)		K8 (27)	K8 (27)
26	KOREAN TAB VEE (30) (29)	S	(13)	(13)	(13) (31)		(13) (16)	(13) (16)
27		R	(13)	(13)	(13) (31)		(13) (16)	(13) (16)
28		F	(13)	(13)	(13) (31)		(13) (16)	(13) (16)
29	KOREAN FLOW-THROUGH (30)	S	(13)	(13)	(13) (31)		(13) (16)	(13) (16)
30		F/R	(13)	(13)	(13) (31)		(13) (16)	(13) (16)
31	FIRST GENERATION MAINTENANCE HAS (30) (29)	S/R	K8	K8	K8		K8	K8
32		F	K18	K18	K18		K18	K18
33	SECOND OR THIRD GENERATION MAINTENANCE HAS (30) (29)		K8	K8	K8		K8	K8
34	NON-EXPLOSIVES AIRCRAFT PARKING AREA (17)	NON-DoD	IBD (19)	IBD (19)	IBD (19)		IBD (19)	IBD (19)
35		DoD (18)	(13)	(13)	(13) (20)		(13) (20)	(13) (20)
36	MILITARY USE ONLY	RUNWAY	PTRD (19) (21)	PTRD (19) (21)	NO QD SEPARATION REQUIRED		NO QD SEPARATION REQUIRED	NO QD SEPARATION REQUIRED
37		TAXIWAY	PTRD (19) (21)	PTRD (19) (21)				
38	JOINT MILITARY/ NON-MILITARY USE	RUNWAY	IBD (19)	IBD (19)	IBD (19)	IBD (19)	IBD (19)	IBD (19)
39		TAXIWAY	PTRD (19)	PTRD (19)	PTRD (19)	PTRD (19)	PTRD (19)	PTRD (19)
40	A/C PASSENGER LOAD/UNLOAD AREA	OPEN (22)	PTRD (19)	PTRD (19)	PTRD (19)	PTRD (19)	PTRD (19)	PTRD (19)
41		STRUCTURE (23)	IBD (19)	IBD (19)	IBD (19)	IBD (19)	IBD (19)	IBD (19)
42	COMBAT AIRCRAFT RELATED FACILITIES		(38)	(38)	ILD (37)(38)	ILD (37)(38)	IBD (38)	ILD (37)(38)
43	EXPLOSIVES CARGO AIRCRAFT RELATED FACILITIES		(39)	(39)	IBD (39)	IBD (39)	ILD (37)(39)	IBD (39)
44	MUNITIONS STORAGE AREA RELATED FACILITIES		ILD (37)(40)	ILD (37)(40)	(40)	(40)	ILD (37)(39)	ILD (37) (40)
45	RELATED FACILITY		ILD (37)(40)	ILD (37)(40)	ILD (37)(38)	ILD (37)(38)	ILD (37)(39)	ILD (37)
46	PUBLIC TRAFFIC ROUTE		PTRD (36)	PTRD (36)	PTRD (36)	PTRD (36)	PTRD (36)	PTRD (36)
47	INHABITED BUILDING		IBD (36)	IBD (36)	IBD (36)	IBD (36)	IBD (36)	IBD (36)

Table 12.1. HD 1.1 QD Criteria Notes (12) (24) (continued)

	COLUMN		15	16
LINE	TO: EXPOSED SITE (ES)	FROM: POTENTIAL EXPLOSION SITE (PES)	HARDENED AIRCRAFT SHELTER (1st Generation & Korean TAB VEE) (29) (30)	HARDENED AIRCRAFT SHELTER (2nd / 3rd GENERATION & Korean Flow-Through) (29) (30)
1	EARTH COVERED MAGAZINE (7-BAR) (4)	S	USE ABOVE GROUND MAGAZINE COLUMNS	USE ABOVE GROUND MAGAZINE COLUMNS
2		R		
3		FU		
4		FB (3)		
5	EARTH COVERED MAGAZINE (3-BAR) (4)	S		
6		R		
7		FU		
8		FB (3)		
9	EARTH COVERED MAGAZINE (UNDEFINED) (4)	S		
10		R		
11		FU		
12		FB (3)		
13	ABOVE GROUND MAGAZINE (6)	U		
14		B (3)		
15	BARRICADED MODULES	U		
16		B (5)		
17	OPERATING LOCATION	U	ILD (10) (32)	ILD (10) (33)
18		B (3)	ILD (11) (32)	ILD (11) (33)
19	COMBAT AIRCRAFT PARKING AREA	SINGLE A/C	(13) (16)	(13) (16)
20		A/C GROUP		
21	EXPLOSIVES CARGO AIRCRAFT PARKING AREA		USE ABOVE GROUND MAGAZINE COLUMNS	USE ABOVE GROUND MAGAZINE COLUMNS
22	FLIGHTLINE MUNITIONS HOLDING AREA			
23	FIRST GENERATION HARDENED AIRCRAFT SHELTER (30) (29)	S/R	(34)	(34)
24		F		
25	SECOND OR THIRD GENERATION HARDENED AIRCRAFT SHELTER (30) (29)			
26	KOREAN TAB VEE (30) (29)	S		
27		R		
28		F		
29	KOREAN FLOW-THROUGH (30)	S		
30		F/R		
31	FIRST GENERATION MAINTENANCE HAS (30) (29)	S/R		
32		F		
33	SECOND OR THIRD GENERATION MAINTENANCE HAS (30) (29)			
34	NON-EXPLOSIVES AIRCRAFT PARKING AREA (17)	NON-DoD	IBD (32)	IBD (33)
35		DoD (18)	(13) (20)	(13) (20)
36	MILITARY USE ONLY	RUNWAY	NO QD SEPARATION REQUIRED	NO QD SEPARATION REQUIRED
37		TAXIWAY		
38	JOINT MILITARY/ NON-MILITARY USE	RUNWAY	IBD (32)	IBD (33)
39		TAXIWAY	PTRD (32)	PTRD (33)
40	A/C PASSENGER LOAD/UNLOAD AREA	OPEN (22)	PTRD (32)	PTRD (33)
41		STRUCTURE (23)	IBD (32)	IBD (33)
42	COMBAT AIRCRAFT RELATED FACILITIES		ILD (10) (32) (38)	ILD (10) (33) (38)
43	EXPLOSIVES CARGO AIRCRAFT RELATED FACILITIES		IBD (32) (35) (39)	IBD (33) (39)
44	MUNITIONS STORAGE AREA RELATED FACILITIES		IBD (32) (35) (40)	IBD (33) (40)
45	RELATED FACILITY		ILD (10) (32)	ILD (10) (33)
46	PUBLIC TRAFFIC ROUTE		PTRD (32)	PTRD (33)
47	INHABITED BUILDING		IBD (32)	IBD (33)

Notes for Table 12.1

1. Use this K-factor for NEWQD in PES up to 250,000 lbs.
2. Use this K-factor for NEWQD in PES greater than 250,000 lbs.
3. These barricades serve to mitigate both fragment and overpressure hazards. See Section 6E for their requirements.
4. ECMs must meet the design requirements in Section 6C. Sectors (front/side/rear) of ECMs are defined in paragraph 12.21. The front sector of an ECM is considered unbarricaded unless barricaded per Section 6E to mitigate fragment hazards.
5. These barricades serve to mitigate fragment hazards. See Section 6D for their requirements.
6. AGMs are all types of above grade (non earth-covered) magazines or storage pads. This includes open air munitions stocks, light structures (e.g., Butler buildings), and trucks/trailers/railcars loaded with explosives.
7. Although Barricaded Modules are considered AGMs, reduced QD (K1.1) may be applied between modules provided the requirements of Section 6D are met (to include limitations on the type of AE which may be stored in them, and prohibition on the use of heavy structures). If the requirements of Section 6D are not met, use AGM criteria.
8. See **paragraph 12.24.1**.
9. See **paragraph 12.24.2**.
10. See **paragraph 12.24.3**.
11. See **paragraph 12.24.4**.
12. See Section 12F - Allowable Exposures, Section 12H – HD1.1 QD Criteria, and Section 12O - QD criteria for specific facilities and systems.
13. Use Table 12.22 (K30 with an 111 foot minimum) to provide aircraft survivability from blast overpressure. Additionally, barricades are required if protection from low-angle, high-speed fragments is desired; side/rear of an ECM, or arch of a HAS, suffice as barricades for this purpose.
14. Minimum required distance is K11, or K6 if a barricade meeting the requirements of Section 6E is between the PES and ES. Combat aircraft may be separated at less than IMD provided:
    a. Their NEWQDs are combined to determine required QD to other exposures, *and*
    b. Approval is obtained from at least the Numbered Air Force (NAF) Vice Commander owning the exposed aircraft (except for ARMCO revetted cells containing two aircraft). If separation at less than IMD is required for support of a Unified Commander, the Major Air Component Vice Commander having operational control of the aircraft will be the lowest approval.
15. For QD purposes, an aircraft group is defined as two or more aircraft loaded with combat configured explosives that are parked at less than IMD. Although they do not reduce the required separation, intervening barricades are recommended. With NAF approval, K11 between groups may be used for contingency operations, per Chapter 13.
16. This distance may be reduced to K11, or K6 if a barricade meeting the requirements of Section 6E is between the PES and ES. See note 13 if survivability is desired.
17. Consider parked aeroclub aircraft as non-DoD aircraft for QD purposes; the presence of aeroclub aircraft does not make an airfield joint-use.
18. MAJCOMs may require greater separation for unique mission or high value aircraft.
19. See **paragraph 12.23** for IBD and PTRD separation criteria.
20. These distances may be reduced with MAJCOM approval.

21. When required at overseas locations only, use K4.5 (or D=1.8Q1/3, where D is the distance in meters and Q equals the NEWQD in kilograms). The use of this reduced separation depends on operational necessity, providing the commander accepts the transient risk to military aircraft movements. If siting facilities, the MAJCOM/CC or CV must provide AFSC/SEW a letter listing all installations at which this separation distance will apply and state acceptance of transient risk to military aircraft movements.
22. Use this row for locations in the open where passengers enplane and deplane.
23. Use this row if a structure is included where passengers assemble, such as a passenger terminal building.
24. Use this table for siting HD 1.5 (see **paragraph 12.13.5**).
25. This distance provides aircraft survivability from blast overpressure. For IMD protection, this distance may be reduced to K9, or K6 if a barricade meeting the requirements of Section 6E is between the PES and ES.
26. This distance provides aircraft survivability from blast overpressure. For IMD protection, this distance may be reduced to K2.75.
27. This distance provides aircraft survivability from blast overpressure. For IMD protection, this distance may be reduced to K2.75.
28. This distance provides aircraft survivability from blast overpressure. For IMD protection, this distance may be reduced to K9, or K6 if a barricade meeting the requirements of Section 6E is between the PES and ES.
29. Separations are based on shelter doors remaining closed, except for aircraft towing, fueling, servicing, run up, or taxi, and during concurrent servicing operations or short periods when maintenance equipment or munitions are being moved into or out of shelters. If doors are left open for extended periods, normal combat aircraft parking area apply to and from the front. as a PES, parenthetical (xx) fragment distances do not apply except out the front of a Korean TAB VEE HAS and out the front/rear of a Korean Flow-Through HAS.
30. HASs must meet the category requirements in paragraph 12.51.1. Sectors (front/side/rear) of HASs are defined in paragraph 12.21. A HAS arch or rear wall may be considered as a barricade for application of K6, when applicable. The front sector of an HAS is considered unbarricaded unless barricaded per Section 6E to mitigate fragment hazards. (See para 12.51.)
31. This distance provides aircraft survivability. For IMD protection, this distance may be reduced to K11, or K6 if a barricade meeting the requirements of Section 6E is between the PES and ES.
32. Use Table 12.25B
33. Use Table 12.25A.
34. Use Table 12.24 (aircraft survivability) for separation between HASs, and between HASs and HAS Ready Service ECMs/AGMs. The MAJCOM/CC/CV may approve the use of Table 12.23 (IMD equivalent separation).
35. IBD out the side is K62; IBD out the rear is K40; IBD out the front is K50.
36. See **paragraph 12.23**.
37. See **paragraph 12.24**.
38. See **paragraph 12.40**.
39. See **paragraph 12.41**.
40. See **paragraph 12.42**.

Table 12.1. (ACC) HD 1.

LINE	COLUMN		1	2	3	4	5	6	7	8
	TO: EXPOSED SITE (ES)	FROM: POTENTIAL EXPLOSION SITE (PES)	EARTH COVERED MAGAZINE (4)				ABOVE GROUND MAGAZINE (6)		BARRICADED MODULES	
			S	R	FB (3)	FU	B (3)	U	B (5)	U
1	EARTH COVERED MAGAZINE (7-BAR) (4)	S	K1.25	K1.25	K2.75	K2.75	K4.5	K4.5	K4.5	K4.5
2		R	K1.25	K1.25	K2	K2	K4.5	K4.5	K4.5	K4.5
3		FU	K2.75	K2	K6	K6	K6	K6	K6	K6
4		FB (3)	K2.75	K2	K4.5	K6	K4.5	K6	K4.5	K6
5	EARTH COVERED MAGAZINE (3-BAR) (4)	S	K1.25	K1.25	K2.75	K2.75	K6	K6	K6	K6
6		R	K1.25	K1.25	K2	K2	K6	K6	K6	K6
7		FU	K4.5	K4.5	K6	K9	K6	K9	K6	K9
8		FB (3)	K4.5	K4.5	K6	K6	K6	K6	K6	K6
9	EARTH COVERED MAGAZINE (UNDEFINED) (4)	S	K1.25 (1) K2 (2)	K1.25 (1) K2 (2)	K4.5 (1) K6 (2)	K4.5 (1) K6 (2)	K6	K6	K6	K6
10		R	K1.25	K1.25	K2	K2	K6	K6	K6	K6
11		FU	K6	K6	K6	K11	K6	K11	K6	K11
12		FB (3)	K6	K6	K6	K6	K6	K6	K6	K6
13	ABOVE GROUND MAGAZINE (6)	U	K6	K6	K6	K11	K6	K11	K6	K11
14		B (3)	K6	K6	K6	K6	K6	K6	K6	K6
15	BARRICADED MODULES	U	K6	K6	K6	K11	K6	K11	K1.1 (7)	K11
16		B (5)	K1.25	K1.25	K6	K6	K6	K6	K1.1 (7)	K1.1 (7)
17	OPERATING LOCATION	U	ILD (8)	ILD (8)	ILD (8)	ILD (8)	ILD (10)	ILD (10)	ILD (10)	ILD (10)
18		B (3)	ILD (9)	ILD (9)	ILD (9)	ILD (9)	ILD (11)	ILD (11)	ILD (11)	ILD (11)
19	COMBAT AIRCRAFT PARKING AREA	SINGLE A/C	(13)	(13)	(13)	(13)	(13)	(13)	(13)	(13)
20		A/C GROUP								
21	EXPLOSIVES CARGO AIRCRAFT PARKING AREA		(13)(16)	(13)(16)	(13)(16)	(13)(16)	(13)(16)	(13)(16)	(13)(16)	(13)(16)
22	FLIGHTLINE MUNITIONS HOLDING AREA		K6	K6	K6	K11	K6	K11	K6	K11
23	FIRST GENERATION HARDENED AIRCRAFT SHELTER (30) (29)	S/R	K5	K5	K8	K8	K8	K8	K8	K8
24		F	K18	K18	K18	K18	K18	K18	K18	K18
25	SECOND OR THIRD GENERATION HARDENED AIRCRAFT SHELTER (30) (29)		K5	K5	K8	K8	K8	K8	K8	K8
26	KOREAN TAB VEE (30) (29)	S	(13)	(13)	(13)	(13)	(13)	(13)	(13)	(13)
27		R	(13)	(13)	(13)	(13)	(13)	(13)	(13)	(13)
28		F	(13)	(13)	(13)	(13)	(13)	(13)	(13)	(13)
29	KOREAN FLOW-THROUGH (30)	S	(13)	(13)	(13)	(13)	(13)	(13)	(13)	(13)
30		F/R	(13)	(13)	(13)	(13)	(13)	(13)	(13)	(13)
31	FIRST GENERATION MAINTENANCE HAS (30) (29)	S/R	K5	K5	K8	K8	K8	K8	K8	K8
32		F	K18	K18	K18	K18	K18	K18	K18	K18
33	SECOND OR THIRD GENERATION MAINTENANCE HAS (30) (29)		K5	K5	K8	K8	K8	K8	K8	K8
34	NON-EXPLOSIVES AIRCRAFT PARKING AREA (17)	NON-DoD	IBD (19)	IBD (19)	IBD (19)	IBD (19)	IBD (19)	IBD (19)	IBD (19)	IBD (19)
35		DoD (18)	(13)	(13)	(13)	(13)	(13)	(13)	(13)	(13)
36	MILITARY USE ONLY	RUNWAY	PTRD (19) (21)	PTRD (19) (21)	PTRD (19) (21)	PTRD (19) (21)	PTRD (19) (21)	PTRD (19) (21)	PTRD (19) (21)	PTRD (19) (21)
37		TAXIWAY	ILD (8) (21)	ILD (8) (21)	PTRD (19) (21)	PTRD (19) (21)	PTRD (19) (21)	PTRD (19) (21)	PTRD (19) (21)	PTRD (19) (21)
38	JOINT MILITARY/ NON-MILITARY USE	RUNWAY	IBD (19)	IBD (19)	IBD (19)	IBD (19)	IBD (19)	IBD (19)	IBD (19)	IBD (19)
39		TAXIWAY	PTRD (19)	PTRD (19)	PTRD (19)	PTRD (19)	PTRD (19)	PTRD (19)	PTRD (19)	PTRD (19)
40	A/C PASSENGER LOAD/UNLOAD AREA	OPEN (22)	PTRD (19)	PTRD (19)	PTRD (19)	PTRD (19)	PTRD (19)	PTRD (19)	PTRD (19)	PTRD (19)
41		STRUCTURE (23)	IBD (19)	IBD (19)	IBD (19)	IBD (19)	IBD (19)	IBD (19)	IBD (19)	IBD (19)
42	COMBAT AIRCRAFT RELATED FACILITIES		IBD (38)	IBD (38)	IBD (38)	IBD (38)	IBD (38)	IBD (38)	IBD (38)	IBD (38)
43	EXPLOSIVES CARGO AIRCRAFT RELATED FACILITIES		ILD (39)	ILD (39)	ILD (39)	ILD (39)	ILD (39)	ILD (39)	ILD (39)	ILD (39)
44	MUNITIONS STORAGE AREA RELATED FACILITIES		ILD (37)(40)	ILD (37)(40)	ILD (37)(40)	ILD (37)(40)	ILD (37)(40)	ILD (37)(40)	ILD (37)(40)	ILD (37)(40)
45	RELATED FACILITY		ILD (37)(40)	ILD (37)(40)	ILD (37)(40)	ILD (37)(40)	ILD (37)(40)	ILD (37)(40)	ILD (37)(40)	ILD (37)(40)
46	PUBLIC TRAFFIC ROUTE		PTRD (36)	PTRD (36)	PTRD (36)	PTRD (36)	PTRD (36)	PTRD (36)	PTRD (36)	PTRD (36)
47	INHABITED BUILDING		IBD (36)	IBD (36)	IBD (36)	IBD (36)	IBD (36)	IBD (36)	IBD (36)	IBD (36)
	COLUMN		9	10	11	12	13		14	

LINE	TO: EXPOSED SITE (ES)	FROM: POTENTIAL EXPLOSION SITE (PES)	OPERATING LOCATION		COMBAT AIRCRAFT PARKING AREA		EXPLOSIVES CARGO AIRCRAFT PARKING AREA	FLIGHTLINE MUNITIONS HOLDING AREA
			B (3)	U	Single A/C	A/C Group		
1	EARTH COVERED MAGAZINE (7-BAR) (4)	S	K4.5	K4.5	USE ABOVE GROUND MAGAZINE COLUMNS		USE ABOVE GROUND MAGAZINE COLUMNS	USE ABOVE GROUND MAGAZINE COLUMNS
2		R	K4.5	K4.5				
3		FU	K6	K6				
4		FB (3)	K4.5	K6				
5	EARTH COVERED MAGAZINE (3-BAR) (4)	S	K6	K6				
6		R	K6	K6				
7		FU	K6	K9				
8		FB (3)	K6	K6				
9	EARTH COVERED MAGAZINE (UNDEFINED) (4)	S	K6	K6				
10		R	K6	K6				
11		FU	K6	K11				
12		FB (3)	K6	K6				
13	ABOVE GROUND MAGAZINE (6)	U	K6	K11				
14		B (3)	K6	K6				
15	BARRICADED MODULES	U	K6	K11				
16		B (5)	K6	K6				
17	OPERATING LOCATION	U	ILD (10)	ILD (10)				
18		B (3)	ILD (11)	ILD (11)				
19	COMBAT AIRCRAFT PARKING AREA	SINGLE A/C	(13)	(13)	(13) (14) (16)	ILD (10) (13) (15)	(13) (16)	(13) (16)
20		A/C GROUP			ILD (10) (13) (15)			
21	EXPLOSIVES CARGO AIRCRAFT PARKING AREA		(13)(16)	(13)(16)	USE ABOVE GROUND MAGAZINE COLUMNS		USE ABOVE GROUND MAGAZINE COLUMNS	USE ABOVE GROUND MAGAZINE COLUMNS
22	FLIGHTLINE MUNITIONS HOLDING AREA		K6	K11				
23	FIRST GENERATION HARDENED AIRCRAFT SHELTER (30) (29)	S/R	K8	K8	K8 (26)		K8 (27)	K8 (27)
24		F	K18	K18	K18 (25)		K18 (28)	K18 (28)
25	SECOND OR THIRD GENERATION HARDENED AIRCRAFT SHELTER (30) (29)		K8	K8	K8 (26)		K8 (27)	K8 (27)
26	KOREAN TAB VEE (30) (29)	S	(13)	(13)	(13) (31)		(13) (16)	(13) (16)
27		R	(13)	(13)	(13) (31)		(13) (16)	(13) (16)
28		F	(13)	(13)	(13) (31)		(13) (16)	(13) (16)
29	KOREAN FLOW-THROUGH (30)	S	(13)	(13)	(13) (31)		(13) (16)	(13) (16)
30		F/R	(13)	(13)	(13) (31)		(13) (16)	(13) (16)
31	FIRST GENERATION MAINTENANCE HAS (30) (29)	S/R	K8	K8	K8		K8	K8
32		F	K18	K18	K18		K18	K18
33	SECOND OR THIRD GENERATION MAINTENANCE HAS (30) (29)		K8	K8	K8		K8	K8
34	NON-EXPLOSIVES AIRCRAFT PARKING AREA (17)	NON-DoD	IBD (19)	IBD (19)	IBD (19)		IBD (19)	IBD (19)
35		DoD (18)	(13)	(13)	(13) (20)		(13) (20)	(13) (20)
36	MILITARY USE ONLY	RUNWAY	PTRD (19) (21)	PTRD (19) (21)	NO QD SEPARATION REQUIRED		NO QD SEPARATION REQUIRED	NO QD SEPARATION REQUIRED
37		TAXIWAY	PTRD (19) (21)	PTRD (19) (21)				
38	JOINT MILITARY/ NON-MILITARY USE	RUNWAY	IBD (19)	IBD (19)	IBD (19)	IBD (19)	IBD (19)	IBD (19)
39		TAXIWAY	PTRD (19)	PTRD (19)	PTRD (19)	PTRD (19)	PTRD (19)	PTRD (19)
40	A/C PASSENGER LOAD/UNLOAD AREA	OPEN (22)	PTRD (19)	PTRD (19)	PTRD (19)	PTRD (19)	PTRD (19)	PTRD (19)
41		STRUCTURE (23)	IBD (19)	IBD (19)	IBD (19)	IBD (19)	IBD (19)	IBD (19)
42	COMBAT AIRCRAFT RELATED FACILITIES		(38)	(38)	ILD (37)(38)	ILD (37)(38)	IBD (38)	ILD (37)(38)
43	EXPLOSIVES CARGO AIRCRAFT RELATED FACILITIES		(39)	(39)	IBD (39)	IBD (39)	ILD (37)(39)	IBD (39)
44	MUNITIONS STORAGE AREA RELATED FACILITIES		ILD (37)(40)	ILD (37)(40)	(40)	(40)	ILD (37)(39)	ILD (37) (40)
45	RELATED FACILITY		ILD (37)(40)	ILD (37)(40)	ILD (37)(38)	ILD (37)(38)	ILD (37)(39)	ILD (37)
46	PUBLIC TRAFFIC ROUTE		PTRD (36)	PTRD (36)	PTRD (36)	PTRD (36)	PTRD (36)	PTRD (36)
47	INHABITED BUILDING		IBD (36)	IBD (36)	IBD (36)	IBD (36)	IBD (36)	IBD (36)

	COLUMN		15	16
LINE	TO: EXPOSED SITE (ES)	FROM: POTENTIAL EXPLOSION SITE (PES)	HARDENED AIRCRAFT SHELTER (1st Generation & Korean TAB VEE) (29) (30)	HARDENED AIRCRAFT SHELTER (2nd / 3rd GENERATION & Korean Flow-Through) (29) (30)
1	EARTH COVERED MAGAZINE (7-BAR) (4)	S	USE ABOVE GROUND MAGAZINE COLUMNS	USE ABOVE GROUND MAGAZINE COLUMNS
2		R		
3		FU		
4		FB (3)		
5	EARTH COVERED MAGAZINE (3-BAR) (4)	S		
6		R		
7		FU		
8		FB (3)		
9	EARTH COVERED MAGAZINE (UNDEFINED) (4)	S		
10		R		
11		FU		
12		FB (3)		
13	ABOVE GROUND MAGAZINE (6)	U		
14		B (3)		
15	BARRICADED MODULES	U		
16		B (5)		
17	OPERATING LOCATION	U	ILD (10) (32)	ILD (10) (33)
18		B (3)	ILD (11) (32)	ILD (11) (33)
19	COMBAT AIRCRAFT PARKING AREA	SINGLE A/C	(13) (16)	(13) (16)
20		A/C GROUP		
21	EXPLOSIVES CARGO AIRCRAFT PARKING AREA		USE ABOVE GROUND MAGAZINE COLUMNS	USE ABOVE GROUND MAGAZINE COLUMNS
22	FLIGHTLINE MUNITIONS HOLDING AREA			
23	FIRST GENERATION HARDENED AIRCRAFT SHELTER (30) (29)	S/R	(34)	(34)
24		F		
25	SECOND OR THIRD GENERATION HARDENED AIRCRAFT SHELTER (30) (29)			
26	KOREAN TAB VEE (30) (29)	S		
27		R		
28		F		
29	KOREAN FLOW-THROUGH (30)	S		
30		F/R		
31	FIRST GENERATION MAINTENANCE HAS (30) (29)	S/R		
32		F		
33	SECOND OR THIRD GENERATION MAINTENANCE HAS (30) (29)			
34	NON-EXPLOSIVES AIRCRAFT PARKING AREA (17)	NON-DoD	IBD (32)	IBD (33)
35		DoD (18)	(13) (20)	(13) (20)
36	MILITARY USE ONLY	RUNWAY	NO QD SEPARATION REQUIRED	NO QD SEPARATION REQUIRED
37		TAXIWAY		
38	JOINT MILITARY/ NON-MILITARY USE	RUNWAY	IBD (32)	IBD (33)
39		TAXIWAY	PTRD (32)	PTRD (33)
40	A/C PASSENGER LOAD/UNLOAD AREA	OPEN (22)	PTRD (32)	PTRD (33)
41		STRUCTURE (23)	IBD (32)	IBD (33)
42	COMBAT AIRCRAFT RELATED FACILITIES		ILD (10) (32) (38)	ILD (10) (33) (38)
43	EXPLOSIVES CARGO AIRCRAFT RELATED FACILITIES		IBD (32) (35) (39)	IBD (33) (39)
44	MUNITIONS STORAGE AREA RELATED FACILITIES		IBD (32) (35) (40)	IBD (33) (40)
45	RELATED FACILITY		ILD (10) (32)	ILD (10) (33)
46	PUBLIC TRAFFIC ROUTE		PTRD (32)	PTRD (33)
47	INHABITED BUILDING		IBD (32)	IBD (33)

Notes for Table 12.1

1. Use this K-factor for NEWQD in PES up to 250,000 lbs.
2. Use this K-factor for NEWQD in PES greater than 250,000 lbs.
3. These barricades serve to mitigate both fragment and overpressure hazards. See Section 6E for their requirements.
4. ECMs must meet the design requirements in Section 6C. Sectors (front/side/rear) of ECMs are defined in paragraph 12.21. The front sector of an ECM is considered unbarricaded unless barricaded per Section 6E to mitigate fragment hazards.
5. These barricades serve to mitigate fragment hazards. See Section 6D for their requirements.
6. AGMs are all types of above grade (non earth-covered) magazines or storage pads. This includes open air munitions stocks, light structures (e.g., Butler buildings), and trucks/trailers/railcars loaded with explosives.
7. Although Barricaded Modules are considered AGMs, reduced QD (K1.1) may be applied between modules provided the requirements of Section 6D are met (to include limitations on the type of AE which may be stored in them, and prohibition on the use of heavy structures). If the requirements of Section 6D are not met, use AGM criteria.
8. See **paragraph 12.24.1**.
9. See **paragraph 12.24.2**.
10. See **paragraph 12.24.3**.
11. See **paragraph 12.24.4**.
12. See Section 12F - Allowable Exposures, Section 12H – HD1.1 QD Criteria, and Section 12O - QD criteria for specific facilities and systems.
13. Use Table 12.22 (K30 with an 111 foot minimum) to provide aircraft survivability from blast overpressure. Additionally, barricades are required if protection from low-angle, high-speed fragments is desired; side/rear of an ECM, or arch of a HAS, suffice as barricades for this purpose.

(ADDED) Table 12.1 Note 13. Apply survivability criteria to PL 1 or 2 assets in relationship to other PES. If survivability criteria cannot be met to PL1 or 2 assets, document a commanders risk acceptance and forward along with ESP packages. Contact Security Forces A7SO section for assistance in determining PL requirements

14. Minimum required distance is K11, or K6 if a barricade meeting the requirements of Section 6E is between the PES and ES. Combat aircraft may be separated at less than IMD provided:

a. Their NEWQDs are combined to determine required QD to other exposures, *and*

b. Approval is obtained from at least the Numbered Air Force (NAF) Vice Commander owning the exposed aircraft (except for ARMCO revetted cells containing two aircraft). If separation at less than IMD is required for support of a Unified Commander, the Major Air Component Vice Commander having operational control of the aircraft will be the lowest approval.

15. For QD purposes, an aircraft group is defined as two or more aircraft loaded with combat configured explosives that are parked at less than IMD. Although they do not reduce the required separation, intervening barricades are recommended. With NAF approval, K11 between groups may be used for contingency operations, per Chapter 13.
16. This distance may be reduced to K11, or K6 if a barricade meeting the requirements of Section 6E is between the PES and ES. See note 13 if survivability is desired.
17. Consider parked aeroclub aircraft as non-DoD aircraft for QD purposes; the presence of

aeroclub aircraft does not make an airfield joint-use.
18. MAJCOMs may require greater separation for unique mission or high value aircraft.
19. See **paragraph 12.23** for IBD and PTRD separation criteria.
20. These distances may be reduced with MAJCOM approval(ADDED) Table 12.1 Note 20. For Q-D purposes, consider all ACC owned aircraft as combat aircraft. Apply survivability per note 13 when possible.

21. When required at overseas locations only, use K4.5 (or D=1.8Q1/3, where D is the distance in meters and Q equals the NEWQD in kilograms). The use of this reduced separation depends on operational necessity, providing the commander accepts the transient risk to military aircraft movements. If siting facilities, the MAJCOM/CC or CV must provide AFSC/SEW a letter listing all installations at which this separation distance will apply and state acceptance of transient risk to military aircraft movements.

22. Use this row for locations in the open where passengers enplane and deplane.
23. Use this row if a structure is included where passengers assemble, such as a passenger terminal building.
24. Use this table for siting HD 1.5 (see **paragraph 12.13.5**).
25. This distance provides aircraft survivability from blast overpressure. For IMD protection, this distance may be reduced to K9, or K6 if a barricade meeting the requirements of Section 6E is between the PES and ES.
26. This distance provides aircraft survivability from blast overpressure. For IMD protection, this distance may be reduced to K2.75.
27. This distance provides aircraft survivability from blast overpressure. For IMD protection, this distance may be reduced to K2.75.
28. This distance provides aircraft survivability from blast overpressure. For IMD protection, this distance may be reduced to K9, or K6 if a barricade meeting the requirements of Section 6E is between the PES and ES.
29. Separations are based on shelter doors remaining closed, except for aircraft towing, fueling, servicing, run up, or taxi, and during concurrent servicing operations or short periods when maintenance equipment or munitions are being moved into or out of shelters. If doors are left open for extended periods, normal combat aircraft parking area apply to and from the front. as a PES, parenthetical (xx) fragment distances do not apply except out the front of a Korean TAB VEE HAS and out the front/rear of a Korean Flow-Through HAS.
30. HASs must meet the category requirements in paragraph 12.51.1. Sectors (front/side/rear) of HASs are defined in paragraph 12.21. A HAS arch or rear wall may be considered as a barricade for application of K6, when applicable. The front sector of an HAS is considered unbarricaded unless barricaded per Section 6E to mitigate fragment hazards. (See para 12.51.)
31. This distance provides aircraft survivability. For IMD protection, this distance may be reduced to K11, or K6 if a barricade meeting the requirements of Section 6E is between the PES and ES.
32. Use Table 12.25B
33. Use Table 12.25A.
34. Use Table 12.24 (aircraft survivability) for separation between HASs, and between HASs and HAS Ready Service ECMs/AGMs. The MAJCOM/CC/CV may approve the use of Table 12.23 (IMD equivalent separation).
35. IBD out the side is K62; IBD out the rear is K40; IBD out the front is K50.

36. See **paragraph 12.23**.
37. See **paragraph 12.24**.
38. See **paragraph 12.40**.
39. See **paragraph 12.41**.
40. See **paragraph 12.42**.

Table 12.2. HD 1.2.1, 1.2.2, and 1.2.3 QD Criteria NOTES (1) (2) (3)

	COLUMN		1	2	3	4	5	6	7	8	9
LINE	TO: EXPOSED SITE (ES)	FROM: POTENTIAL EXPLOSION SITE (PES)	EARTH COVERED MAGAZINE (4) (30)		ABOVE GROUND MAGAZINE (6)			BARRICADED MODULES	OPERATING LOCATION		
			S or R	F	(H)	(H/R)	(L)	(L)	(H)	(H/R)	(L)
1	EARTH COVERED MAGAZINE (7-BAR/3-BAR) (4)	S	0 (43)	0 (43)	0 (43)	0 (43)	0 (43)	0 (43)	0 (43)	0 (43)	0 (43)
2		R	0 (43)	0 (43)	0 (43)	0 (43)	0 (43)	0 (43)	0 (43)	0 (43)	0 (43)
3		FU	0 (43)	0 (43)	0 (43)	0 (43)	0 (43)	0 (43)	0 (43)	0 (43)	0 (43)
4		FB (5)	0 (43)	0 (43)	0 (43)	0 (43)	0 (43)	0 (43)	0 (43)	0 (43)	0 (43)
5	EARTH COVERED MAGAZINE (UNDEFINED) (4)	S	0 (43)	0 (43)	0 (43)	0 (43)	0 (43)	0 (43)	0 (43)	0 (43)	0 (43)
6		R	0 (43)	0 (43)	0 (43)	0 (43)	0 (43)	0 (43)	0 (43)	0 (43)	0 (43)
7		FU	0 (43)	(7)	(7)	(7)	(7)	(7)	(7)	(7)	(7)
8		FB (5)	0 (43)	0 (43)	0 (43)	0 (43)	0 (43)	0 (43)	0 (43)	0 (43)	0 (43)
9	ABOVE GROUND MAGAZINE	(H/R)	0 (43)	0 (43)	0 (43)	0 (43)	0 (43)	0 (43)	0 (43)	0 (43)	0 (43)
10		(H or L)	0 (43)	(7)	(7)	(7)	(7)	(7)	(7)	(7)	(7)
11	BARRICADED MODULES	(L)	0 (43)	(7)	(7)	(7)	(7)	(8)	(7)	(7)	(7)
12	OPERATING LOCATION	(H/R)	0 (43)	(10)	(10)	(10)	(10)	(10)	(10)	(10)	(10)
13		(H or L)	0 (43)	(10)	(10)	(10)	(10)	(10)	(10)	(10)	(10)
14	COMBAT AIRCRAFT PARKING AREA		(12)	(13)	(13)	(13)	(13)	(13)	(13)	(13)	(13)
15	EXPLOSIVES CARGO AIRCRAFT PARKING AREA		(14)	(15)	(15)	(15)	(15)	(15)	(15)	(15)	(15)
16	FLIGHTLINE MUNITIONS HOLDING AREA		(16)	(16)	(16)	(16)	(16)	(16)	(16)	(16)	(16)
17	HARDENED AIRCRAFT SHELTER (32)		(12)	(13)	(13)	(13)	(13)	(13)	(13)	(13)	(13)
18	MAINTENANCE HAS (32) (39)		(12)	(13)	(13)	(13)	(13)	(13)	(13)	(13)	(13)
19	NON-EXPLOSIVES AIRCRAFT PARKING AREA (19)	NON-DoD	(17)	(18)	(18)	(18)	(18)	(18)	(18)	(18)	(18)
20		DoD (20)	(12)	(13)	(13)	(13)	(13)	(13)	(13)	(13)	(13)
21	MILITARY USE ONLY	RUNWAY	(21) (23)	(22) (23)	(22) (23)	(22) (23)	(22) (23)	(22) (23)	(22) (23)	(22) (23)	(22) (23)
22		TAXIWAY	(28)	(22) (23)	(22) (23)	(22) (23)	(22) (23)	(22) (23)	(22) (23)	(22) (23)	(22) (23)
23	JOINT MILITARY/ NON-MILITARY USE	RUNWAY	(17)	(18)	(18)	(18)	(18)	(18)	(18)	(18)	(18)
24		TAXIWAY	(21)	(22)	(22)	(22)	(22)	(22)	(22)	(22)	(22)
25	A/C PASSENGER LOAD/UNLOAD AREA	OPEN (24)	(21)	(22)	(22)	(22)	(22)	(22)	(22)	(22)	(22)
26		STRUCTURE (25)	(17)	(18)	(18)	(18)	(18)	(18)	(18)	(18)	(18)
27	COMBAT AIRCRAFT RELATED FACILITIES		(40)	(40)	(40)	(40)	(40)	(40)	(40)	(40)	(40)
28	EXPLOSIVES CARGO AIRCRAFT RELATED FACILITIES		(41)	(41)	(41)	(41)	(41)	(41)	(41)	(41)	(41)
29	MUNITIONS STORAGE AREA RELATED FACILITIES		(42)	(42)	(42)	(42)	(42)	(42)	(42)	(42)	(42)
30	RELATED FACILITY		(26)	(26)	(26)	(26)	(26)	(26)	(26)	(26)	(26)
31	PUBLIC TRAFFIC ROUTE		(21)	(22)	(22)	(22)	(22)	(22)	(22)	(22)	(22)
32	INHABITED BUILDING		(17)	(18)	(18)	(18)	(18)	(18)	(18)	(18)	(18)

Table 12.2. HD 1.2.1, 1.2.2, and 1.2.3 QD Criteria NOTES (1) (2) (3) (continued)

	COLUMN		10	11	12	13
LINE	TO: EXPOSED SITE (ES)	FROM: POTENTIAL EXPLOSION SITE (PES)	COMBAT AIRCRAFT PARKING AREA	EXPLOSIVES CARGO AIRCRAFT PARKING AREA	FLIGHTLINE MUNITIONS HOLDING AREA	HARDENED AIRCRAFT SHELTER (31) (32) (33)
1	EARTH COVERED MAGAZINE (7-BAR/3-BAR) (4)	S	USE ABOVE GROUND MAGAZINE (L) COLUMN	USE ABOVE GROUND MAGAZINE (L) COLUMN	USE ABOVE GROUND MAGAZINE (L) COLUMN	(34) (35)
2		R				
3		FU				
4		FB (5)				
5	EARTH COVERED MAGAZINE (UNDEFINED) (4)	S				
6		R				
7		FU				
8		FB (5)				
9	ABOVE GROUND MAGAZINE	(H/R)				
10		(H or L)				
11	BARRICADED MODULES	(L)				
12	OPERATING LOCATION	(H/R)				
13		(H or L)				(34) (35)
14	COMBAT AIRCRAFT PARKING AREA		(27)	(27)	(27)	(27)
15	EXPLOSIVES CARGO AIRCRAFT PARKING AREA		(27)	(27)	(27)	(27)
16	FLIGHTLINE MUNITIONS HOLDING AREA		(27)	(27)	(27)	(27)
17	HARDENED AIRCRAFT SHELTER (32)		(27)	(27)	(27)	(27)
18	MAINTENANCE HAS (32) (39)		(36) (37)	(36) (37)	(36) (37)	(35) (37) (38)
19	NON-EXPLOSIVES AIRCRAFT PARKING AREA (19)	NON-DoD	(18)	(18)	(18)	(18) (35)
20		DoD (20)	(29)	(29)	(29)	(29)
21	MILITARY USE ONLY	RUNWAY	NO QD SEPARATION REQUIRED	NO QD SEPARATION REQUIRED	NO QD SEPARATION REQUIRED	NO QD SEPARATION REQUIRED
22		TAXIWAY				
23	JOINT MILITARY/ NON-MILITARY USE	RUNWAY	(18)	(18)	(18)	(18) (35)
24		TAXIWAY	(22)	(22)	(22)	(22) (35)
25	A/C PASSENGER LOAD/UNLOAD AREA	OPEN (24)	(22)	(22)	(22)	(22) (35)
26		STRUCTURE (25)	(18)	(18)	(18)	(18) (35)
27	COMBAT AIRCRAFT RELATED FACILITIES		(40)	(40)	(40)	(34) (35)
28	EXPLOSIVES CARGO AIRCRAFT RELATED FACILITIES		(41)	(41)	(41)	(18) (35)
29	MUNITIONS STORAGE AREA RELATED FACILITIES		(42)	(42)	(42)	(18) (35)
30	RELATED FACILITY		(26)	(26)	(26)	(34) (35)
31	PUBLIC TRAFFIC ROUTE		(22)	(22)	(22)	(22) (35)
32	INHABITED BUILDING		(18)	(18)	(18)	(18) (35)

Notes for Table 12.2

LEGEND:
(H)—Heavy Wall: Buildings with wall thickness ≥ 12 inches of reinforced concrete; as an ES, door must be barricaded (to mitigate fragment hazards per Section 6B) if it faces a PES.
(H/R)—Heavy Wall and Roof: Buildings with wall thickness ≥ 12 inches of reinforced concrete and a roof thickness > 5.9 inches of reinforced concrete; as an ES, door must be barricaded (to mitigate fragment hazards per Section 6B) if it faces a PES; side/rear exposures may or may not be barricaded.
(L)—Light Wall: Light structure, open stack, truck, trailer, railcar, cargo aircraft
NOTES:
1. See Section 12F - Allowable Exposures for additional exposures and Section 12O - QD criteria for specific facilities and systems.
2. When the NEWQD and the MCE of the packaged HD 1.2.1 items fall within the ranges specified in equation (NEWQD ≤ MCE ≤ 450 lbs), the HD 1.2.1 will be treated as HD 1.1 and the criteria of paragraph 12.23.1.1, as applicable, will be used (see **paragraph 12.26.1**).
3. When siting HD 1.2.3, cap the NEWQD of the largest single round at ≤ 450 pounds, and cap the (xx) at 1300 feet. These caps are for simplicity in siting and may be exceeded with AFSC/SEW approval.
4. ECMs must meet the design requirements in Section 6C. Sectors (front/side/rear) of ECMs are defined in paragraph 12.21. The front sector of an ECM is considered unbarricaded unless barricaded per Section 6E to mitigate fragment hazards.
5. These barricades serve to mitigate fragment hazards. See Section 6E for their requirements.
6. AGMs are all types of above grade (non earth-covered) magazines or storage pads. This includes open air munitions stocks, light structures (e.g., Butler buildings), and trucks/trailers/railcars loaded with explosives.
7. Required IMD separation is as follows:
HD 1.2.1 MCE < 100 lbs: 200 ft
HD 1.2.1 MCE ≥ 100 lbs: 300 ft
HD 1.2.2: 100 ft
HD 1.2.3 to an ES containing only HD 1.2.3: 50 ft
HD 1.2.3 to an ES containing other than HD 1.2.3: K11 based on the NEWQD of the single round of the largest (greatest NEWQD) HD 1.2.3 item in the PES, with a 50 ft minimum
8. Although Barricaded Modules are considered AGMs, reduced QD may be applied between modules, provided the requirements of Section 6D are met (to include limitations on the type of AE which may be stored in them, and prohibition on the use of heavy structures). If the requirements of Section 6D are not met, use AGM criteria. IM distance for HD 1.2.x. for module to module separation is based on total NEWQD. MCE and LSRN are not used to calculate IM distance between modules.
9. Required ILD separation is as follows:
HD 1.2.1 and 1.2.2: 50 ft
HD 1.2.3: 36% of the IBD, with a minimum distance equal to the IMD treating the ES as an AGM.
10. Required ILD separation is as follows:

HD 1.2.1, 1.2.2 and 1.2.3: 36% of the IBD, with a minimum distance equal to the IMD treating the ES as an AGM.

11. Required ILD separation is as follows:

HD 1.2.1 and 1.2.2: IMD treating the ES as an AGM

HD 1.2.3: 36% of the IBD, with a minimum distance equal to the IMD treating the ES as an AGM.

12. Apply PTRD separation per Note 21. If aircraft survivability is mandated by the MAJCOM, PTRD to the front of HAS with doors normally closed is acceptable for aircraft survivability or IBD separation per Note 17 for aircraft survivability for all other relationships.

13. Apply PTRD separation per Note 22. If aircraft survivability is mandated by the MAJCOM, PTRD to the front of HAS with doors normally closed is acceptable for aircraft survivability or IBD separation per Note 18 for aircraft survivability for all other relationships.

14. Apply IMD separation treating the ES as an AGM. If aircraft survivability is mandated by the MAJCOM, IBD separation per Note 17 is required for aircraft survivability.

15. Apply IMD separation treating the ES as an AGM. If aircraft survivability is mandated by the MAJCOM, IBD separation per Note 18 is required for aircraft survivability.

16. Apply IMD separation treating the ES as an AGM.

17. Required IBD separation is as follows:

HD 1.2.1 MCE < 100 lbs: 200 ft

HD 1.2.1 MCE ≥ 100 lbs: 300 ft

HD 1.2.2: 100 ft

HD 1.2.3: IBD per paragraph 12.27.2.1

18. Required IBD separation is as follows:

HD 1.2.1 in a structure/truck/trailer/railcar/cargo aircraft: IBD is the larger of the IBD from Table 12.9 or the HDD from Table 12.10

HD 1.2.1 in the open/external a/c AE/stacks on open truck/trailer/railcar: IBD is the IBD from Table 12.9

HD 1.2.2: IBD is the IBD from Table 12.11

HD 1.2.3: IBD per paragraph 12.27.2.1

19. Consider parked aeroclub aircraft as non-DoD aircraft for QD purposes; the presence of aeroclub aircraft does not make an airfield joint-use.

20. MAJCOMs may require greater separation for unique mission or high value aircraft.

21. Required PTRD separation is as follows:

HD 1.2.1 MCE < 100 lbs: 200 ft

HD 1.2.1 MCE ≥ 100 lbs: 300 ft

HD 1.2.2: 100 ft

HD 1.2.3: 60% of the IBD, with a minimum distance equal to the IMD treating the ES as an AGM (H or L)

22. Required PTRD separation is as follows:

HD 1.2.1, 1.2.2 and 1.2.3: 60% of the IBD, with a minimum distance equal to the IMD treating the ES as an AGM (H or L).

23. When required at overseas locations only, use 125 ft. The use of this reduced separation depends on operational necessity, providing the commander accepts the transient risk to military aircraft movements. If siting facilities, the MAJCOM/CC or CV must provide AFSC/SEW a

letter listing all installations at which this separation distance will apply and state acceptance of transient risk to military aircraft movements.
24. Use this row for locations in the open where passengers enplane and deplane.
25. Use this row if a structure is included where passengers assemble, such as a passenger terminal building.
26. Treat as an Operating Location to determine required ILD separation.
27. No QD separation is required, unless the MAJCOM requires aircraft survivability (PTRD to the front of HAS with doors normally closed is acceptable for aircraft survivability; use IBD separation per Note 18 for aircraft survivability for all other relationships).
28. No QD separation is required.
29. MAJCOMs will determine required QD separation.
30. ECMs may be used to their physical capacity for HD 1.2 provided they meet separation requirements for a minimum of 100 lbs of HD 1.1, and provided separations to other exposures comply with applicable QD criteria.
31. Separations are based on shelter doors remaining closed, except for aircraft towing, fueling, servicing, run up, or taxi, and during concurrent servicing operations or short periods when maintenance equipment or munitions are being moved into or out of shelters. If doors are left open for extended periods, normal combat aircraft parking area apply from the front.
32. HASs must meet the category requirements in paragraph 12.51.1. Sectors (front/side/rear) of HASs are defined in paragraph 12.21. The front sector of an HAS is considered unbarricaded unless barricaded per Section 6E to mitigate fragment hazards. (See **paragraph 12.51**.)
33. First, Second and Third Generation HASs, and Korean TAB VEE HASs, sited for HD 1.2.1 MCE < 110 lbs, HD 1.2.2, or HD 1.2.3 LSRN<110 lbs do not generate a QD clear zone except out the front. Korean Flow-Through HASs sited for HD 1.2.1 MCE < 110 lbs, HD 1.2.2, or HD 1.2.3 LSRN<110 lbs do not generate a QD clear zone except out the front and rear. Fire protection distances still apply.
34. For a front exposure from a First, Second or Third Generation HAS, use the AGM (H/R) criteria. For a front exposure from a Korean TAB VEE or Korean Flow-Through HAS, use the AGM (L) criteria.
35. Treat First, Second, and Third Generation HAS as AGM (H/R), Korean TAB VEE side/rear as an AGM (H/R) and front as an AGM (H or L), Korean Flow-Through side as an AGM (H/R) and front/rear as an AGM (H or L)
36. Required ILD separation is as follows:

HD 1.2.1, 1.2.2 and 1.2.3: 36% of the IBD, with a minimum distance equal to the IMD treating First, Second, and Third Generation as an AGM (H/R), Korean TAB VEE side/rear as an AGM (H/R) and front as an AGM (H or L), Korean Flow-Through side as an AGM (H/R) and front/rear as an AGM (H or L)

37. MAJCOM may require aircraft survivability (PTRD to the front of HAS with doors normally closed is acceptable for aircraft survivability; use IBD separation per Note 18 for aircraft survivability for all other relationships).
38. Treat the PES as an AGM: for a front exposure from a First, Second or Third Generation HAS, use (H/R) criteria; for a front exposure from a Korean TAB VEE or Korean Flow-Through HAS, use (L) criteria. Treat the ES as an Operating Location: to a First, Second, and Third Generation use (H/R) criteria; to the side/rear of a Korean TAB VEE use (H/R) criteria and to the front use (H or L) criteria; to the side of a Korean Flow-Through use (H/R) criteria and to the front/rear use (H or L) criteria.

39. Separations are based on shelter doors remaining closed, except for aircraft towing, fueling, servicing, run up, or taxi, and during concurrent servicing operations or short periods when maintenance equipment or munitions are being moved into or out of shelters. If doors are left open for extended periods, treat the front exposure as an Operating Location (H or L).
40. See **paragraph 12.40**.
41. See **paragraph 12.41**.
42. See **paragraph 12.42**.
43. Practical considerations such as firefighting and security will dictate specific separation distance requirements.

Table 12.2. (ACC) HD 1.

LINE	COLUMN		1	2	3	4	5	6	7	8	9
	TO: EXPOSED SITE (ES)	FROM: POTENTIAL EXPLOSION SITE (PES)	EARTH COVERED MAGAZINE (4) (30)		ABOVE GROUND MAGAZINE (6)			BARRICADED MODULES	OPERATING LOCATION		
			S or R	F	(H)	(H/R)	(L)	(L)	(H)	(H/R)	(L)
1	EARTH COVERED MAGAZINE (7-BAR/3-BAR) (4)	S	0 (43)	0 (43)	0 (43)	0 (43)	0 (43)	0 (43)	0 (43)	0 (43)	0 (43)
2		R	0 (43)	0 (43)	0 (43)	0 (43)	0 (43)	0 (43)	0 (43)	0 (43)	0 (43)
3		FU	0 (43)	0 (43)	0 (43)	0 (43)	0 (43)	0 (43)	0 (43)	0 (43)	0 (43)
4		FB (5)	0 (43)	0 (43)	0 (43)	0 (43)	0 (43)	0 (43)	0 (43)	0 (43)	0 (43)
5	EARTH COVERED MAGAZINE (UNDEFINED) (4)	S	0 (43)	0 (43)	0 (43)	0 (43)	0 (43)	0 (43)	0 (43)	0 (43)	0 (43)
6		R	0 (43)	0 (43)	0 (43)	0 (43)	0 (43)	0 (43)	0 (43)	0 (43)	0 (43)
7		FU	0 (43)	(7)	(7)	(7)	(7)	(7)	(7)	(7)	(7)
8		FB (5)	0 (43)	0 (43)	0 (43)	0 (43)	0 (43)	0 (43)	0 (43)	0 (43)	0 (43)
9	ABOVE GROUND MAGAZINE	(H/R)	0 (43)	0 (43)	0 (43)	0 (43)	0 (43)	0 (43)	0 (43)	0 (43)	0 (43)
10		(H or L)	0 (43)	(7)	(7)	(7)	(7)	(7)	(7)	(7)	(7)
11	BARRICADED MODULES	(L)	0 (43)	(7)	(7)	(7)	(7)	(8)	(7)	(7)	(7)
12	OPERATING LOCATION	(H/R)	0 (43)	(10)	(10)	(10)	(10)	(10)	(10)	(10)	(10)
13		(H or L)	0 (43)	(10)	(10)	(10)	(10)	(10)	(10)	(10)	(10)
14	COMBAT AIRCRAFT PARKING AREA		(12)	(13)	(13)	(13)	(13)	(13)	(13)	(13)	(13)
15	EXPLOSIVES CARGO AIRCRAFT PARKING AREA		(14)	(15)	(15)	(15)	(15)	(15)	(15)	(15)	(15)
16	FLIGHTLINE MUNITIONS HOLDING AREA		(16)	(16)	(16)	(16)	(16)	(16)	(16)	(16)	(16)
17	HARDENED AIRCRAFT SHELTER (32)		(12)	(13)	(13)	(13)	(13)	(13)	(13)	(13)	(13)
18	MAINTENANCE HAS (32) (39)		(12)	(13)	(13)	(13)	(13)	(13)	(13)	(13)	(13)
19	NON-EXPLOSIVES AIRCRAFT PARKING AREA (19)	NON-DoD	(17)	(18)	(18)	(18)	(18)	(18)	(18)	(18)	(18)
20		DoD (20)	(12)	(13)	(13)	(13)	(13)	(13)	(13)	(13)	(13)
21	MILITARY USE ONLY	RUNWAY	(21) (23)	(22) (23)	(22) (23)	(22) (23)	(22) (23)	(22) (23)	(22) (23)	(22) (23)	(22) (23)
22		TAXIWAY	(28)	(22) (23)	(22) (23)	(22) (23)	(22) (23)	(22) (23)	(22) (23)	(22) (23)	(22) (23)
23	JOINT MILITARY/ NON-MILITARY USE	RUNWAY	(17)	(18)	(18)	(18)	(18)	(18)	(18)	(18)	(18)
24		TAXIWAY	(21)	(22)	(22)	(22)	(22)	(22)	(22)	(22)	(22)
25	A/C PASSENGER LOAD/UNLOAD AREA	OPEN (24)	(21)	(22)	(22)	(22)	(22)	(22)	(22)	(22)	(22)
26		STRUCTURE (25)	(17)	(18)	(18)	(18)	(18)	(18)	(18)	(18)	(18)
27	COMBAT AIRCRAFT RELATED FACILITIES		(40)	(40)	(40)	(40)	(40)	(40)	(40)	(40)	(40)
28	EXPLOSIVES CARGO AIRCRAFT RELATED FACILITIES		(41)	(41)	(41)	(41)	(41)	(41)	(41)	(41)	(41)
29	MUNITIONS STORAGE AREA RELATED FACILITIES		(42)	(42)	(42)	(42)	(42)	(42)	(42)	(42)	(42)
30	RELATED FACILITY		(26)	(26)	(26)	(26)	(26)	(26)	(26)	(26)	(26)
31	PUBLIC TRAFFIC ROUTE		(21)	(22)	(22)	(22)	(22)	(22)	(22)	(22)	(22)
32	INHABITED BUILDING		(17)	(18)	(18)	(18)	(18)	(18)	(18)	(18)	(18)

COLUMN	10	11	12	13

LINE	TO: EXPOSED SITE (ES)	FROM: POTENTIAL EXPLOSION SITE (PES)	COMBAT AIRCRAFT PARKING AREA	EXPLOSIVES CARGO AIRCRAFT PARKING AREA	FLIGHTLINE MUNITIONS HOLDING AREA	HARDENED AIRCRAFT SHELTER (31) (32) (33)
1	EARTH COVERED MAGAZINE (7-BAR/3-BAR) (4)	S	USE ABOVE GROUND MAGAZINE (L) COLUMN	USE ABOVE GROUND MAGAZINE (L) COLUMN	USE ABOVE GROUND MAGAZINE (L) COLUMN	(34) (35)
2		R				
3		FU				
4		FB (5)				
5	EARTH COVERED MAGAZINE (UNDEFINED) (4)	S				
6		R				
7		FU				
8		FB (5)				
9	ABOVE GROUND MAGAZINE	(H/R)				
10		(H or L)				
11	BARRICADED MODULES	(L)				
12	OPERATING LOCATION	(H/R)				
13		(H or L)				(34) (35)
14	COMBAT AIRCRAFT PARKING AREA		(27)	(27)	(27)	(27)
15	EXPLOSIVES CARGO AIRCRAFT PARKING AREA		(27)	(27)	(27)	(27)
16	FLIGHTLINE MUNITIONS HOLDING AREA		(27)	(27)	(27)	(27)
17	HARDENED AIRCRAFT SHELTER (32)		(27)	(27)	(27)	(27)
18	MAINTENANCE HAS (32) (39)		(36) (37)	(36) (37)	(36) (37)	(35) (37) (38)
19	NON-EXPLOSIVES AIRCRAFT PARKING AREA (19)	NON-DoD	(18)	(18)	(18)	(18) (35)
20		DoD (20)	(29)	(29)	(29)	(29)
21	MILITARY USE ONLY	RUNWAY	NO QD SEPARATION REQUIRED	NO QD SEPARATION REQUIRED	NO QD SEPARATION REQUIRED	NO QD SEPARATION REQUIRED
22		TAXIWAY				
23	JOINT MILITARY/ NON-MILITARY USE	RUNWAY	(18)	(18)	(18)	(18) (35)
24		TAXIWAY	(22)	(22)	(22)	(22) (35)
25	A/C PASSENGER LOAD/UNLOAD AREA	OPEN (24)	(22)	(22)	(22)	(22) (35)
26		STRUCTURE (25)	(18)	(18)	(18)	(18) (35)
27	COMBAT AIRCRAFT RELATED FACILITIES		(40)	(40)	(40)	(34) (35)
28	EXPLOSIVES CARGO AIRCRAFT RELATED FACILITIES		(41)	(41)	(41)	(18) (35)
29	MUNITIONS STORAGE AREA RELATED FACILITIES		(42)	(42)	(42)	(18) (35)
30	RELATED FACILITY		(26)	(26)	(26)	(34) (35)
31	PUBLIC TRAFFIC ROUTE		(22)	(22)	(22)	(22) (35)
32	INHABITED BUILDING		(18)	(18)	(18)	(18) (35)

Notes for Table 12.2

LEGEND:

(H)—Heavy Wall: Buildings with wall thickness ≥ 12 inches of reinforced concrete; as an ES,

door must be barricaded (to mitigate fragment hazards per Section 6B) if it faces a PES.
(H/R)—Heavy Wall and Roof: Buildings with wall thickness ≥ 12 inches of reinforced concrete and a roof thickness > 5.9 inches of reinforced concrete; as an ES, door must be barricaded (to mitigate fragment hazards per Section 6B) if it faces a PES; side/rear exposures may or may not be barricaded.
(L)—Light Wall: Light structure, open stack, truck, trailer, railcar, cargo aircraft
NOTES:
1. See Section 12F - Allowable Exposures for additional exposures and Section 12O - QD criteria for specific facilities and systems.
2. When the NEWQD and the MCE of the packaged HD 1.2.1 items fall within the ranges specified in equation (NEWQD ≤ MCE ≤ 450 lbs), the HD 1.2.1 will be treated as HD 1.1 and the criteria of paragraph 12.23.1.1, as applicable, will be used (see **paragraph 12.26.1**).
3. When siting HD 1.2.3, cap the NEWQD of the largest single round at ≤ 450 pounds, and cap the (xx) at 1300 feet. These caps are for simplicity in siting and may be exceeded with AFSC/SEW approval.
4. ECMs must meet the design requirements in Section 6C. Sectors (front/side/rear) of ECMs are defined in paragraph 12.21. The front sector of an ECM is considered unbarricaded unless barricaded per Section 6E to mitigate fragment hazards.
5. These barricades serve to mitigate fragment hazards. See Section 6E for their requirements.
6. AGMs are all types of above grade (non earth-covered) magazines or storage pads. This includes open air munitions stocks, light structures (e.g., Butler buildings), and trucks/trailers/railcars loaded with explosives.
7. Required IMD separation is as follows:

HD 1.2.1 MCE < 100 lbs: 200 ft

HD 1.2.1 MCE ≥ 100 lbs: 300 ft

HD 1.2.2: 100 ft

HD 1.2.3 to an ES containing only HD 1.2.3: 50 ft

HD 1.2.3 to an ES containing other than HD 1.2.3: K11 based on the NEWQD of the single round of the largest (greatest NEWQD) HD 1.2.3 item in the PES, with a 50 ft minimum

8. Although Barricaded Modules are considered AGMs, reduced QD may be applied between modules, provided the requirements of Section 6D are met (to include limitations on the type of AE which may be stored in them, and prohibition on the use of heavy structures). If the requirements of Section 6D are not met, use AGM criteria. IM distance for HD 1.2.x. for module to module separation is based on total NEWQD. MCE and LSRN are not used to calculate IM distance between modules.
9. Required ILD separation is as follows:

HD 1.2.1 and 1.2.2: 50 ft

HD 1.2.3: 36% of the IBD, with a minimum distance equal to the IMD treating the ES as an AGM.

10. Required ILD separation is as follows:
HD 1.2.1, 1.2.2 and 1.2.3: 36% of the IBD, with a minimum distance equal to the IMD treating the ES as an AGM.
11. Required ILD separation is as follows:

HD 1.2.1 and 1.2.2: IMD treating the ES as an AGM

HD 1.2.3: 36% of the IBD, with a minimum distance equal to the IMD treating the ES as an AGM.

12. Apply PTRD separation per Note 21. If aircraft survivability is mandated by the MAJCOM, PTRD to the front of HAS with doors normally
closed is acceptable for aircraft survivability or IBD separation per Note 17 for aircraft survivability for all other relationships.
13. Apply PTRD separation per Note 22. If aircraft survivability is mandated by the MAJCOM, PTRD to the front of HAS with doors normally closed is acceptable for aircraft survivability or IBD separation per Note 18 for aircraft survivability for all other relationships.
14. Apply IMD separation treating the ES as an AGM. If aircraft survivability is mandated by the MAJCOM, IBD separation per Note 17 is required for aircraft survivability.
15. Apply IMD separation treating the ES as an AGM. If aircraft survivability is mandated by the MAJCOM, IBD separation per Note 18 is required for aircraft survivability.
16. Apply IMD separation treating the ES as an AGM.
17. Required IBD separation is as follows:
HD 1.2.1 MCE < 100 lbs: 200 ft
HD 1.2.1 MCE ≥ 100 lbs: 300 ft
HD 1.2.2: 100 ft
HD 1.2.3: IBD per paragraph 12.27.2.1
18. Required IBD separation is as follows:
HD 1.2.1 in a structure/truck/trailer/railcar/cargo aircraft: IBD is the larger of the IBD from Table 12.9 or the HDD from Table 12.10
HD 1.2.1 in the open/external a/c AE/stacks on open truck/trailer/railcar: IBD is the IBD from Table 12.9
HD 1.2.2: IBD is the IBD from Table 12.11
HD 1.2.3: IBD per paragraph 12.27.2.1
19. Consider parked aeroclub aircraft as non-DoD aircraft for QD purposes; the presence of aeroclub aircraft does not make an airfield joint-use.
20. MAJCOMs may require greater separation for unique mission or high value aircraft.
21. Required PTRD separation is as follows:
HD 1.2.1 MCE < 100 lbs: 200 ft
HD 1.2.1 MCE ≥ 100 lbs: 300 ft
HD 1.2.2: 100 ft
HD 1.2.3: 60% of the IBD, with a minimum distance equal to the IMD treating the ES as an AGM (H or L)
22. Required PTRD separation is as follows:
HD 1.2.1, 1.2.2 and 1.2.3: 60% of the IBD, with a minimum distance equal to the IMD treating the ES as an AGM (H or L).
23. When required at overseas locations only, use 125 ft. The use of this reduced separation depends on operational necessity, providing the commander accepts the transient risk to military aircraft movements. If siting facilities, the MAJCOM/CC or CV must provide AFSC/SEW a letter listing all installations at which this separation distance will apply and state acceptance of transient risk to military aircraft movements.
24. Use this row for locations in the open where passengers enplane and deplane.
25. Use this row if a structure is included where passengers assemble, such as a passenger terminal building.
26. Treat as an Operating Location to determine required ILD separation.
27. No QD separation is required, unless the MAJCOM requires aircraft survivability (PTRD to

the front of HAS with doors normally closed is acceptable for aircraft survivability; use IBD separation per Note 18 for aircraft survivability for all other relationships).
(ADDED) Note 27. Apply survivability criteria to PL 1 or 2 assets in relationship to other PES. If survivability criteria cannot be met to PL1 or 2 assets, document a commanders risk acceptance and forward along with ESP packages. Contact Security Forces A7SO section for assistance in determining PL requirements.

28. No QD separation is required.

29. MAJCOMs will determine required QD separation.
(ADDED) Note 29. For Q-D purposes, consider all ACC owned aircraft as combat aircraft. Apply survivability per note 27 when possible

30. ECMs may be used to their physical capacity for HD 1.2 provided they meet separation requirements for a minimum of 100 lbs of HD 1.1, and provided separations to other exposures comply with applicable QD criteria.
31. Separations are based on shelter doors remaining closed, except for aircraft towing, fueling, servicing, run up, or taxi, and during concurrent servicing operations or short periods when maintenance equipment or munitions are being moved into or out of shelters. If doors are left open for extended periods, normal combat aircraft parking area apply from the front.
32. HASs must meet the category requirements in paragraph 12.51.1. Sectors (front/side/rear) of HASs are defined in paragraph 12.21. The front sector of an HAS is considered unbarricaded unless barricaded per Section 6E to mitigate fragment hazards. (See **paragraph 12.51**.)
33. First, Second and Third Generation HASs, and Korean TAB VEE HASs, sited for HD 1.2.1 MCE < 110 lbs, HD 1.2.2, or HD 1.2.3 LSRN<110 lbs do not generate a QD clear zone except out the front. Korean Flow-Through HASs sited for HD 1.2.1 MCE < 110 lbs, HD 1.2.2, or HD 1.2.3 LSRN<110 lbs do not generate a QD clear zone except out the front and rear. Fire protection distances still apply.
34. For a front exposure from a First, Second or Third Generation HAS, use the AGM (H/R) criteria. For a front exposure from a Korean TAB VEE or Korean Flow-Through HAS, use the AGM (L) criteria.
35. Treat First, Second, and Third Generation HAS as AGM (H/R), Korean TAB VEE side/rear as an AGM (H/R) and front as an AGM (H or L), Korean Flow-Through side as an AGM (H/R) and front/rear as an AGM (H or L)
36. Required ILD separation is as follows:
HD 1.2.1, 1.2.2 and 1.2.3: 36% of the IBD, with a minimum distance equal to the IMD treating First, Second, and Third Generation as an AGM (H/R), Korean TAB VEE side/rear as an AGM (H/R) and front as an AGM (H or L), Korean Flow-Through side as an AGM (H/R) and front/rear as an AGM (H or L)
37. MAJCOM may require aircraft survivability (PTRD to the front of HAS with doors normally closed is acceptable for aircraft survivability; use IBD separation per Note 18 for aircraft survivability for all other relationships).

Table 12.3. HD 1.3, 1.4 and 1.6 QD Criteria. NOTES (1) (10) (11)

	COLUMN		1	2	3	4
LINE	TO: EXPOSED SITE (ES) / FROM: POTENTIAL EXPLOSION SITE (PES)		EARTH COVERED MAGAZINE (2) (9)	ABOVE GROUND MAGAZINE (3)	BARRICADED MODULES (4)	OPERATING LOCATION
1	EARTH COVERED MAGAZINE (2)		IMD (12)	IMD (12)	IMD (12)	IMD (12)
2	ABOVE GROUND MAGAZINE (3)		IMD (12)	IMD (13)	IMD (13)	IMD (13)
3	BARRICADED MODULES		IMD (12)	IMD (13)	IMD (13) (4)	IMD (13)
4	OPERATING LOCATION		ILD (14)	ILD (14)	ILD (14)	ILD (14)
5	COMBAT AIRCRAFT PARKING AREA		PTRD (15)	PTRD (15)	PTRD (15)	PTRD (15)
6	EXPLOSIVES CARGO AIRCRAFT PARKING AREA		IMD (12) (16)	IMD (13) (16)	IMD (13) (16)	IMD (13) (16)
7	FLIGHTLINE MUNITIONS HOLDING AREA		IMD (12)	IMD (13)	IMD (13)	IMD (13)
8	HARDENED AIRCRAFT SHELTER (23)		PTRD (15)	PTRD (15)	PTRD (15)	PTRD (15)
9	MAINTENANCE HAS (23)		PTRD (15)	PTRD (15)	PTRD (15)	PTRD (15)
10	NON-EXPLOSIVES AIRCRAFT PARKING AREA (5)	NON-DoD	IBD (15)	IBD (15)	IBD (15)	IBD (15)
11		DoD (6)	PTRD (15)	PTRD (15)	PTRD (15)	PTRD (15)
12	MILITARY USE ONLY	RUNWAY	PTRD (15) (17)	PTRD (15) (17)	PTRD (15)	PTRD (15)(17)
13		TAXIWAY	PTRD (15) (17) (27)	PTRD (15) (17)	PTRD (15)	PTRD (15) (17)
14	JOINT MILITARY/ NON-MILITARY USE	RUNWAY	IBD (15)	IBD (15)	IBD (15)	IBD (15)
15		TAXIWAY	PTRD (15)	PTRD (15)	PTRD (15)	PTRD (15)
16	A/C PASSENGER LOAD/UNLOAD AREA	OPEN (7)	PTRD (15)	PTRD (15)	PTRD (15)	PTRD (15)
17		STRUCTURE (8)	IBD (15)	IBD (15)	IBD (15)	IBD (15)
18	COMBAT AIRCRAFT RELATED FACILITIES		IBD (24)	IBD (24)	IBD (24)	(24)
19	EXPLOSIVES CARGO AIRCRAFT RELATED FACILITIES		ILD (25)	ILD (25)	ILD (25)	(25)
20	MUNITIONS STORAGE AREA RELATED FACILITIES		ILD (26)	ILD (26)	ILD (26)	ILD (26)
21	RELATED FACILITY		ILD (14)	ILD (14)	ILD (14)	ILD (14)
22	PUBLIC TRAFFIC ROUTE		PTRD (15)	PTRD (15)	PTRD (15)	PTRD (15)
23	INHABITED BUILDING		IBD (15)	IBD (15)	IBD (15)	IBD (15)

Table 12.3. HD 1.3, 1.4 and 1.6 QD Criteria. NOTES (1) (10) (11) (continued)

	COLUMN		5	6	7	8
LINE	TO: EXPOSED SITE (ES) / FROM: POTENTIAL EXPLOSION SITE (PES)		COMBAT AIRCRAFT PARKING AREA	EXPLOSIVES CARGO AIRCRAFT PARKING AREA	FLIGHTLINE MUNITIONS HOLDING AREA	HARDENED AIRCRAFT SHELTER (22) (23)
1	EARTH COVERED MAGAZINE (2)		IMD (12)	IMD (12)	IMD (12)	IMD (12)
2	ABOVE GROUND MAGAZINE (3)		IMD (13)	IMD (13)	IMD (13)	IMD (13)
3	BARRICADED MODULES		IMD (13)	IMD (13)	IMD (13)	IMD (13)
4	OPERATING LOCATION		ILD (14)	ILD (14)	ILD (14)	ILD (14)
5	COMBAT AIRCRAFT PARKING AREA		(18)	(18)	(18)	(18)
6	EXPLOSIVES CARGO AIRCRAFT PARKING AREA		(18)	(18)	(18)	(18)
7	FLIGHTLINE MUNITIONS HOLDING AREA		(13)	(13)	(13)	(13)
8	HARDENED AIRCRAFT SHELTER (23)		(18)	(18)	(18)	(18)
9	MAINTENANCE HAS (23)		ILD (14) (21)	ILD (14) (21)	ILD (14) (21)	ILD (14) (21)
10	NON-EXPLOSIVES AIRCRAFT PARKING AREA (5)	NON-DoD	IBD (15)	IBD (15)	IBD (15)	IBD (15)
11		DoD (6)	(20)	(20)	(20)	(20)
12	MILITARY USE ONLY	RUNWAY	(19)	(19)	(19)	(19)
13		TAXIWAY	(19)	(19)	(19)	(19)
14	JOINT MILITARY/ NON-MILITARY USE	RUNWAY	IBD (15)	IBD (15)	IBD (15)	IBD (15)
15		TAXIWAY	PTRD (15)	PTRD (15)	PTRD (15)	PTRD (15)
16	A/C PASSENGER LOAD/UNLOAD AREA	OPEN (7)	PTRD (15)	PTRD (15)	PTRD (15)	PTRD (15)
17		STRUCTURE (8)	IBD (15)	IBD (15)	IBD (15)	IBD (15)
18	COMBAT AIRCRAFT RELATED FACILITIES		(24)	(24)	(24)	(24)
19	EXPLOSIVES CARGO AIRCRAFT RELATED FACILITIES		(25)	(25)	(25)	(25)
20	MUNITIONS STORAGE AREA RELATED FACILITIES		(26)	(26)	(26)	(26)
21	RELATED FACILITY		ILD (14)	ILD (14)	ILD (14)	ILD (14)
22	PUBLIC TRAFFIC ROUTE		PTRD (15)	PTRD (15)	PTRD (15)	PTRD (15)
23	INHABITED BUILDING		IBD (15)	IBD (15)	IBD (15)	IBD (15)

Notes for Table 12.3

NOTES:

1. See Section 12F - Allowable Exposures for additional exposures and Section 12O - QD criteria for specific facilities and systems.
2. ECMs must meet the design requirements in Section 6C. Sectors (front/side/rear) of ECMs are defined in paragraph 12.21. The front sector of an ECM is considered unbarricaded unless barricaded per Section 6E to mitigate fragment hazards.

3. AGMs are all types of above grade (non earth-covered) magazines or storage pads. This includes open air munitions stocks, light structures (e.g., Butler buildings), and trucks/trailers/railcars loaded with explosives.
4. The requirements of Section 6D are met (to include limitations on the type of AE which may be stored in them, and prohibition on the use of heavy structures). If the requirements of Section 6D are not met, use AGM criteria. HD 1.3 is not allowed in modules.
5. Consider parked aeroclub aircraft as non-DoD aircraft for QD purposes; the presence of aeroclub aircraft does not make an airfield joint-use.
6. MAJCOMs may require greater separation for unique mission or high value aircraft.
7. Use this row for locations in the open where passengers enplane and deplane.
8. Use this row if a structure is included where passengers assemble, such as a passenger terminal building.
9. ECMs may be used to their physical capacity for HD 1.3 and 1.4 provided they meet separation requirements for a minimum of 100 lbs of HD 1.1, and provided separations to other exposures comply with applicable QD criteria.
10. HD 1.4S may be stored (including associated handling) without regard to QD criteria (see **paragraphs 12.29.3** and **2.23**.).
11. Magazines storing only HD 1.4 may be located at IMD (per Table 12.13.) to all other explosives facilities (regardless of HD of NEWQD authorized in these facilities). Because the HD 1.4 may be destroyed as the result of a mishap involving the assets in these adjacent explosives facilities, the responsible commander must accept the potential loss of the HD 1.4 stocks and the storage structure. The commander's risk acceptance must be documented by letter (i.e., signed by the commander stating he/she understands and accepts the potential loss of the HD 1.4 stocks and the storage structure in the event of a mishap in an adjacent explosives facility) and submitted as part of the explosives site plan. A new risk acceptance letter does not need to be generated when a new adjacent explosives facility is sited, as long as the original letter documented that other such structures might be added in future.
12. Required IMD separation is as follows:
    HD 1.3: See Table 12.12 IMD & ILD Column
    HD 1.4: See Table 12.13 ECM IMD Column
    HD 1.6: See Table 12.14 IMD & ILD Column
13. Required IMD separation is as follows:
    HD 1.3: See Table 12.12 IMD & ILD Column
    HD 1.4: See Table 12.13 Applicable AGS IMD Column
    HD 1.6: See Table 12.14 IMD & ILD Column
14. Required ILD separation is as follows:
    HD 1.3: See Table 12.12 IMD & ILD Column
    HD 1.4: See Table 12.13 ILD Column
    HD 1.6: See Table 12.14 IMD & ILD Column
15. Required IBD or PTRD separation is as follows:
    HD 1.3: See Table 12.12 IBD & PTRD Column
    HD 1.4: See Table 12.13 IBD & PTRD Column
    HD 1.6: See Table 12.14 IBD & PTRD Column
16. If required by the MAJCOM, for aircraft survivability apply IBD/PTRD separation is as follows:
    HD 1.3: See Table 12.12 IBD & PTRD Column

HD 1.4: See Table 12.13 IBD & PTRD Column
HD 1.6: See Table 12.14 IBD & PTRD Column

17. When required at overseas locations only, use 125 ft for HD 1.3. The use of this reduced separation depends on operational necessity, providing the commander accepts the transient risk to military aircraft movements. If siting facilities, the MAJCOM/CC or CV must provide AFSC/SEW a letter listing all installations at which this separation distance will apply and state acceptance of transient risk to military aircraft movements.
18. IMD per note 13 as a minimum unless the MAJCOM requires aircraft survivability (apply IBD/PTRD per Note 16 for aircraft survivability). See **paragraph 12.47**. 19. No QD separation is required.
20. MAJCOMs will determine required QD separation.
21. MAJCOM may require aircraft survivability (apply IBD/PTRD per Note 16 for aircraft survivability).
22. A HAS sited for HD 1.3 or 1.4 does not generate a QD clear zone except out the front.
23. HASs must meet the category requirements in paragraph 12.51.1. Sectors (front/side/rear) of HASs are defined in paragraph 12.21. The front sector of an HAS is considered unbarricaded unless barricaded per Section 6E to mitigate fragment hazards. (See **paragraph 12.51**.)
24. See **paragraph 12.40**.
25. See **paragraph 12.41**.
26. See **paragraph 12.42**.
27. For HD 1.3 and HD 1.4, no separation is required from the side or rear of an ECM.

Table 12.3. (ACC) HD 1.

	COLUMN		1	2	3	4
LINE	TO: EXPOSED SITE (ES) / FROM: POTENTIAL EXPLOSION SITE (PES)		EARTH COVERED MAGAZINE (2) (9)	ABOVE GROUND MAGAZINE (3)	BARRICADED MODULES (4)	OPERATING LOCATION
1	EARTH COVERED MAGAZINE (2)		IMD (12)	IMD (12)	IMD (12)	IMD (12)
2	ABOVE GROUND MAGAZINE (3)		IMD (12)	IMD (13)	IMD (13)	IMD (13)
3	BARRICADED MODULES		IMD (12)	IMD (13)	IMD (13) (4)	IMD (13)
4	OPERATING LOCATION		ILD (14)	ILD (14)	ILD (14)	ILD (14)
5	COMBAT AIRCRAFT PARKING AREA		PTRD (15)	PTRD (15)	PTRD (15)	PTRD (15)
6	EXPLOSIVES CARGO AIRCRAFT PARKING AREA		IMD (12) (16)	IMD (13) (16)	IMD (13) (16)	IMD (13) (16)
7	FLIGHTLINE MUNITIONS HOLDING AREA		IMD (12)	IMD (13)	IMD (13)	IMD (13)
8	HARDENED AIRCRAFT SHELTER (23)		PTRD (15)	PTRD (15)	PTRD (15)	PTRD (15)
9	MAINTENANCE HAS (23)		PTRD (15)	PTRD (15)	PTRD (15)	PTRD (15)
10	NON-EXPLOSIVES AIRCRAFT PARKING AREA (5)	NON-DoD	IBD (15)	IBD (15)	IBD (15)	IBD (15)
11		DoD (6)	PTRD (15)	PTRD (15)	PTRD (15)	PTRD (15)
12	MILITARY USE ONLY	RUNWAY	PTRD (15) (17)	PTRD (15) (17)	PTRD (15)	PTRD (15)(17)
13		TAXIWAY	PTRD (15) (17) (27)	PTRD (15) (17)	PTRD (15)	PTRD (15) (17)
14	JOINT MILITARY/ NON-MILITARY USE	RUNWAY	IBD (15)	IBD (15)	IBD (15)	IBD (15)
15		TAXIWAY	PTRD (15)	PTRD (15)	PTRD (15)	PTRD (15)
16	A/C PASSENGER LOAD/UNLOAD AREA	OPEN (7)	PTRD (15)	PTRD (15)	PTRD (15)	PTRD (15)
17		STRUCTURE (8)	IBD (15)	IBD (15)	IBD (15)	IBD (15)
18	COMBAT AIRCRAFT RELATED FACILITIES		IBD (24)	IBD (24)	IBD (24)	(24)
19	EXPLOSIVES CARGO AIRCRAFT RELATED FACILITIES		ILD (25)	ILD (25)	ILD (25)	(25)
20	MUNITIONS STORAGE AREA RELATED FACILITIES		ILD (26)	ILD (26)	ILD (26)	ILD (26)
21	RELATED FACILITY		ILD (14)	ILD (14)	ILD (14)	ILD (14)
22	PUBLIC TRAFFIC ROUTE		PTRD (15)	PTRD (15)	PTRD (15)	PTRD (15)
23	INHABITED BUILDING		IBD (15)	IBD (15)	IBD (15)	IBD (15)

	COLUMN	5	6	7	8
LINE	TO: EXPOSED SITE (ES) / FROM: POTENTIAL EXPLOSION SITE (PES)	COMBAT AIRCRAFT PARKING AREA	EXPLOSIVES CARGO AIRCRAFT PARKING AREA	FLIGHTLINE MUNITIONS HOLDING AREA	HARDENED AIRCRAFT SHELTER (22) (23)
1	EARTH COVERED MAGAZINE (2)	IMD (12)	IMD (12)	IMD (12)	IMD (12)
2	ABOVE GROUND MAGAZINE (3)	IMD (13)	IMD (13)	IMD (13)	IMD (13)
3	BARRICADED MODULES	IMD (13)	IMD (13)	IMD (13)	IMD (13)

4	OPERATING LOCATION		ILD (14)	ILD (14)	ILD (14)	ILD (14)
5	COMBAT AIRCRAFT PARKING AREA		(18)	(18)	(18)	(18)
6	EXPLOSIVES CARGO AIRCRAFT PARKING AREA		(18)	(18)	(18)	(18)
7	FLIGHTLINE MUNITIONS HOLDING AREA		(13)	(13)	(13)	(13)
8	HARDENED AIRCRAFT SHELTER (23)		(18)	(18)	(18)	(18)
9	MAINTENANCE HAS (23)		ILD (14) (21)	ILD (14) (21)	ILD (14) (21)	ILD (14) (21)
10	NON-EXPLOSIVES AIRCRAFT PARKING AREA (5)	NON-DoD	IBD (15)	IBD (15)	IBD (15)	IBD (15)
11		DoD (6)	(20)	(20)	(20)	(20)
12	MILITARY USE ONLY	RUNWAY	(19)	(19)	(19)	(19)
13		TAXIWAY	(19)	(19)	(19)	(19)
14	JOINT MILITARY/ NON-MILITARY USE	RUNWAY	IBD (15)	IBD (15)	IBD (15)	IBD (15)
15		TAXIWAY	PTRD (15)	PTRD (15)	PTRD (15)	PTRD (15)
16	A/C PASSENGER LOAD/UNLOAD AREA	OPEN (7)	PTRD (15)	PTRD (15)	PTRD (15)	PTRD (15)
17		STRUCTURE (8)	IBD (15)	IBD (15)	IBD (15)	IBD (15)
18	COMBAT AIRCRAFT RELATED FACILITIES		(24)	(24)	(24)	(24)
19	EXPLOSIVES CARGO AIRCRAFT RELATED FACILITIES		(25)	(25)	(25)	(25)
20	MUNITIONS STORAGE AREA RELATED FACILITIES		(26)	(26)	(26)	(26)
21	RELATED FACILITY		ILD (14)	ILD (14)	ILD (14)	ILD (14)
22	PUBLIC TRAFFIC ROUTE		PTRD (15)	PTRD (15)	PTRD (15)	PTRD (15)
23	INHABITED BUILDING		IBD (15)	IBD (15)	IBD (15)	IBD (15)

Notes for Table 12.3

NOTES:

1. See Section 12F - Allowable Exposures for additional exposures and Section 12O - QD criteria for specific facilities and systems.
2. ECMs must meet the design requirements in Section 6C. Sectors (front/side/rear) of ECMs are defined in paragraph 12.21. The front sector of an ECM is considered unbarricaded unless barricaded per Section 6E to mitigate fragment hazards.
3. AGMs are all types of above grade (non earth-covered) magazines or storage pads. This includes open air munitions stocks, light structures (e.g., Butler buildings), and trucks/trailers/railcars loaded with explosives.
4. The requirements of Section 6D are met (to include limitations on the type of AE which may be stored in them, and prohibition on the use of heavy structures). If the requirements of Section 6D are not met, use AGM criteria. HD 1.3 is not allowed in modules.
5. Consider parked aeroclub aircraft as non-DoD aircraft for QD purposes; the presence of aeroclub aircraft does not make an airfield joint-use.
6. MAJCOMs may require greater separation for unique mission or high value aircraft.
7. Use this row for locations in the open where passengers enplane and deplane.
8. Use this row if a structure is included where passengers assemble, such as a passenger terminal building.
9. ECMs may be used to their physical capacity for HD 1.3 and 1.4 provided they meet separation requirements for a minimum of 100 lbs of HD 1.1, and provided separations to other exposures comply with applicable QD criteria.

10. HD 1.4S may be stored (including associated handling) without regard to QD criteria (see **paragraphs 12.29.3** and **2.23**.).
11. Magazines storing only HD 1.4 may be located at IMD (per Table 12.13.) to all other explosives facilities (regardless of HD of NEWQD authorized in these facilities). Because the HD 1.4 may be destroyed as the result of a mishap involving the assets in these adjacent explosives facilities, the responsible commander must accept the potential loss of the HD 1.4 stocks and the storage structure. The commander's risk acceptance must be documented by letter (i.e., signed by the commander stating he/she understands and accepts the potential loss of the HD 1.4 stocks and the storage structure in the event of a mishap in an adjacent explosives facility) and submitted as part of the explosives site plan. A new risk acceptance letter does not need to be generated when a new adjacent explosives facility is sited, as long as the original letter documented that other such structures might be added in future.
12. Required IMD separation is as follows:
    HD 1.3: See Table 12.12 IMD & ILD Column
    HD 1.4: See Table 12.13 ECM IMD Column
    HD 1.6: See Table 12.14 IMD & ILD Column
13. Required IMD separation is as follows:
    HD 1.3: See Table 12.12 IMD & ILD Column
    HD 1.4: See Table 12.13 Applicable AGS IMD Column
    HD 1.6: See Table 12.14 IMD & ILD Column
14. Required ILD separation is as follows:
    HD 1.3: See Table 12.12 IMD & ILD Column
    HD 1.4: See Table 12.13 ILD Column
    HD 1.6: See Table 12.14 IMD & ILD Column
15. Required IBD or PTRD separation is as follows:
    HD 1.3: See Table 12.12 IBD & PTRD Column
    HD 1.4: See Table 12.13 IBD & PTRD Column
    HD 1.6: See Table 12.14 IBD & PTRD Column
16. If required by the MAJCOM, for aircraft survivability apply IBD/PTRD separation is as follows:
    HD 1.3: See Table 12.12 IBD & PTRD Column
    HD 1.4: See Table 12.13 IBD & PTRD Column
    HD 1.6: See Table 12.14 IBD & PTRD Column
17. When required at overseas locations only, use 125 ft for HD 1.3. The use of this reduced separation depends on operational necessity, providing the commander accepts the transient risk to military aircraft movements. If siting facilities, the MAJCOM/CC or CV must provide AFSC/SEW a letter listing all installations at which this separation distance will apply and state acceptance of transient risk to military aircraft movements.
18. IMD per note 13 as a minimum unless the MAJCOM requires aircraft survivability (apply IBD/PTRD per Note 16 for aircraft survivability). See **paragraph 12.47**.
(ADDED)Note 18. Apply survivability criteria to PL 1 or 2 assets in relationship to other PES. If survivability criteria cannot be met to PL1 or 2 assets, document a commanders risk acceptance and forward along with ESP packages. Contact Security Forces A7SO section for assistance in determining PL requirements.
19. No QD separation is required.
20. MAJCOMs will determine required QD separation.

(ADDED) Note 20. For Q-D purposes, consider all ACC owned aircraft as combat aircraft. Apply survivability per note 18 when possible 21. MAJCOM may require aircraft survivability (apply IBD/PTRD per Note 16 for aircraft survivability).
22. A HAS sited for HD 1.3 or 1.4 does not generate a QD clear zone except out the front.
23. HASs must meet the category requirements in paragraph 12.51.1. Sectors (front/side/rear) of HASs are defined in paragraph 12.21. The front sector of an HAS is considered unbarricaded unless barricaded per Section 6E to mitigate fragment hazards. (See **paragraph 12.51**.)
24. See **paragraph 12.40**.
25. See **paragraph 12.41**.
26. See **paragraph 12.42**.
27. For HD 1.3 and HD 1.4, no separation is required from the side or rear of an ECM.

Table 12.4. HD 1.1 Default Hazardous Fragment Distances (HFD) for IBD.

NEWQD (lbs)	HFD (ft) in the OPEN [1,3]	HFD (ft) in a STRUCTURE [2,3]	NEWQD	HFD (ft) in the OPEN[1,3]	HFD (ft) in a STRUCTURE[2,3]
< 0.5	236	200	30	561	200
0.7	263	200	31	563	200
1	291	200	50	601	388
2	346	200	70	628	519
3	378	200	100	658	658
5	419	200	150	815	815
7	445	200	200	927	927
10	474	200	300	1085	1085
15	506	200	450	1243	1243
20	529	200	> 450	1250	1250

Notes for Table 12.4

1. Use this column for fragment producing munitions items in the open or in structures incapable of stopping primary fragments. NEWQD in lbs, HFD in ft, with a minimum HFD of 236 ft; ln is natural logarithm; exp [x] is e^x.

NEWQD < 100 lbs: HFD = 291.3 + [79.2 x ln(NEWQD)]
NEWQD ≥ 100 lbs: HFD = -1133.9 + [389 x ln(NEWQD)]

HFD < 658 ft: NEWQD = exp [(HFD/79.2) - 3.678]
658 ft ≤ HFD < 1250 ft: NEWQD = exp [(HFD/389) + 2.914]

NEWQD in lbs, HFD in ft, with a minimum distance of 200 ft; ln is natural logarithm; exp [x] is e^x.

NEWQD ≤ 31 lbs: HFD = 200 ft
31 lbs < NEWQD ≤ 450 lbs: HFD = -1133.9 + [389 x ln(NEWQD)]

HFD < 200 ft:	NEWQD = 0
HFD = 200 ft:	NEWQD ≤ 31
200 ft < HFD ≤ 1243 ft:	NEWQD = exp[(HFD/389) + 2.914]

3. PTRD is 60 percent of HFD.

Table 12.5. HFD for Open Stacks of Selected HD 1.1 AE

NOMENCLATURE [A]	NUMBER OF UNITS [5]									
	1	2	3	4	5	6	7	8	9	10
Sparrow, AIM-7/WAU-17	280	565	770	955	1120	1245				
Sidewinder, AIM-9	400	400	400	400	400	400	400	400	400	400[1]
AMRAAM, AIM-120/WDU-33/B	280	600	650	700	725	750	775	800	[4]	[4]
AMRAMM, AIM-120/WDU-41/B	335	600	650	700	725	750	775	800	[4]	[4]
Chaparral, MIM-72H	400	400	400	400	400	400	400	400	400	400[1]
Maverick, AGM 65 A/B/D	400	500	500							
Maverick, AGM 65 E/F/G	670									
ASROC	500	500	500							
CBU-87 *	800	800	910	945	965	982	1000	1020	1035	1055[2]
Improved Hawk	900	900	900	900	900	900	900	900	900	900[1]
Penguin *	500	500	500							
Projectile, 105 mm [B]	340	355	525	660	725	775	810	845	870	890[2]
Projectile, 155 mm	415	590	770	955	1035	1095	1145	1195	1235	
Projectile, 5”/54	300	375	475	570	680	790	860	925	1005	1085
Harpoon *	500	600[3]	600[3]	600[3]						
Tomahawk *	500	600[3]	600[3]	600[3]						
Bomb, 500-lb, MK 82	670									
Bomb, 1000-lb, MK 83	815									
Bomb, 2000-lb, MK 84	925									
Bomb, BLU-109	880									
Bomb, 750-lb, M117	690									
Torpedo, MK 46	500	500	500	500	500	500	500	500		
Torpedo, MK 48 [C,D] (2.5-truck, or larger, unshielded)	630	775	875	925						
Torpedo, MK 48 [C,E] (Shielded, or other means of transport)	500	500	550	600	635	670	700	725	755	780[2]
Tomahawk Loading on Guided Missile Submarines (SSGN)[f]	750									

Notes for Table 12.5

1. Ten units or more until the point is reached at which this distance is exceeded by the distance requirements of Table 12.6.
2. More than 10 units may be involved before 1250 ft is exceeded. Consult AFSC for distances involving more than 10 units.
3. When handling more than one missile, the missiles must be transported or handled in a nose-to-tail configuration and in their launch capsule or shipping container; furthermore, they must be

aligned and/or handled so that each group of two missiles is located outside of the warhead fragment beam spray region of the other two missiles.
4. Consult AFSC for distances involving more than 8 units.
5. PTRD is 60% of the resulting IBD. ILD / IMD will be based on NEWQD.

GENERAL COMMENTS:
A. Items identified by an asterisk "*" include fragments from shipping or storage containers. However, all of the HFD in this table may be applied to both packaged and unpackaged configurations.

B. 105-mm projectiles and 105-mm complete rounds not in standard storage or shipping containers are HD 1.1.

C. All models, including Advanced Capability (ADCAP).

D. These distances must be used when handling torpedo(es) from 2.5-ton trucks (or larger) where sandbag (or other equivalent) shielding (as described in note (e) below) is not present between the leading edge of the torpedo(es) warhead and the truck crew cab to prevent the crew cab and windshield from contributing to the debris.

E. These distances may be used when handling torpedo(es) from:

1. 2.5-ton trucks (or larger) with sandbag (or other equivalent) shielding between the leading edge of the torpedo(es) warhead and the truck crew cab to prevent the crew cab and windshield from contributing to the debris.

2. Other means of transportation such as flatbed trailers, boats, torpedo transporters, forklifts, or portable cranes.

(NOTE: Sandbag shield requirement is equivalent to a minimum thickness of 2 ft of sand between the truck crew cab and the torpedo(es). The sandbags must shield all parts of the crew cab and windshield from the torpedo warhead.)

F. Handling is limited to one launch tube at a time, with other tubes closed; risks associated with possible propagation from the Tomahawk being handled to all other ammunition and explosives in the SSGN as well as to ammunition and explosives in nearby combatant ships/boats must be assumed by the Navy under an appropriate deviation from these Standards. (If handling is not limited to one launch tube at a time, with other tubes closed, the NEW of the full SSGN load will apply for siting IAW with this Standard.) The reduced QD arc shall be drawn from the tube. (Pier-side staging areas must still be sited, however, the reduced QD in this table for Tomahawk missiles may be used provided the restrictions of Note 3 are applied.)

Table 12.6. HD 1.1 IBD and PTRD.

NEWQD (lbs)	IBD (ft) FROM:				PTRD (ft) FROM:			
	ECM			OTHER PESs [3]	ECM			OTHER PESs [4]
	FRONT [1]	SIDE [1]	REAR [2]		FRONT [4]	SIDE [4]	REAR [4]	
1	500	250	250	NOTE 3	300	150	150	NOTE 4
1.5	500	250	250		300	150	150	
2	500	250	250		300	150	150	
3	500	250	250		300	150	150	
5	500	250	250		300	150	150	
7	500	250	250		300	150	150	
10	500	250	250		300	150	150	
15	500	250	250		300	150	150	
20	500	250	250		300	150	150	
30	500	250	250		300	150	150	
50	500	250	250		300	150	150	
70	500	250	250		300	150	150	
100	500	250	250		300	150	150	
150	500	250	250		300	150	150	
200	700	250	250		420	150	150	
300	700	250	250		420	150	150	
450	700	250	250		420	150	150	
500	1,250	1,250	1,250	1,250	750	750	750	750
700	1,250	1,250	1,250	1,250	750	750	750	750
1,000	1,250	1,250	1,250	1,250	750	750	750	750
1,500	1,250	1,250	1,250	1,250	750	750	750	750
2,000	1,250	1,250	1,250	1,250	750	750	750	750
3,000	1,250	1,250	1,250	1,250	750	750	750	750
5,000	1,250	1,250	1,250	1,250	750	750	750	750
7,000	1,250	1,250	1,250	1,250	750	750	750	750
10,000	1,250	1,250	1,250	1,250	750	750	750	750
15,000	1,250	1,250	1,250	1,250	750	750	750	750
20,000	1,250	1,250	1,250	1,250	750	750	750	750
30,000	1,250	1,250	1,250	1,250	750	750	750	750
45,000	1,250	1,250	1,250	1,423	750	750	750	854
50,000	1,289	1,289	1,250	1,474	774	774	750	884
70,000	1,442	1,442	1,250	1,649	865	865	750	989
100,000	1,625	1,625	1,250	1,857	975	975	750	1,114
150,000	2,177	2,177	1,804	2,346	1,306	1,306	1,083	1,408
200,000	2,680	2,680	2,469	2,770	1,608	1,608	1,481	1,662
250,000	3,149	3,149	3,149	3,151	1,889	1,889	1,889	1,891
300,000	3,347	3,347	3,347	3,347	2,008	2,008	2,008	2,008
500,000	3,969	3,969	3,969	3,969	2,381	2,381	2,381	2,381

Notes for Table 12.6

1. For NEWQD < 45,000 lbs, the distance is controlled by fragments. When fragments are absent or if the HFD is less than the blast hazard range, then the following blast criteria may be used. (NEWQD in lbs, d in ft)

NEWQD $\leq$ 45,000 lbs: $d = 35NEWQD^{1/3}$

45,000 lbs < NEWQD $\leq$ 100,000 lbs:	$d = 35NEWQD^{1/3}$
100,000 lbs < NEWQD $\leq$ 250,000 lbs:	$d = 0.3955NEWQD^{0.7227}$
250,000 lbs < NEWQD:	$d = 50NEWQD^{1/3}$
$d \leq 1{,}245$ ft:	$NEWQD = d^3/42{,}875$
1,245 ft < d $\leq$ 1,625 ft:	$NEWQD = d^3/42{,}875$
1,625 ft < d $\leq$ 3,150 ft:	$NEWQD = 3.60935d^{1.3837}$
3,150 ft < d:	$NEWQD = d^3/125{,}000$

2. For NEWQD < 100,000 lbs, the distance is controlled by fragments and debris. When fragments and debris are absent or the range to a hazardous debris density of 1/600 ft^2 is less than the blast hazard range, then the blast criteria may be used. (NEWQD in lbs, d in ft)

NEWQD $\leq$ 100,000 lbs:	$d = 25NEWQD^{1/3}$
100,000 lbs < NEWQD $\leq$ 250,000 lbs:	$d = 0.004125NEWQD^{1.0898}$
250,000 lbs < NEWQD:	$d = 50NEWQD^{1/3}$
$d \leq 1{,}160$ ft:	$NEWQD = d^3/15{,}625$
1,160 ft < d $\leq$ 3,150 ft:	$NEWQD = 154.2006d^{0.91760}$
3,150 ft < d:	$NEWQD = d^3/125{,}000$

3. For NEWQD < 30,000 lbs, the distance is controlled by fragments and debris. Lesser distances may be permitted for certain situations (see **paragraph 12.23.1**). (NEWQD in lbs, d in ft)

30,000 lbs < NEWQD $\leq$ 100,000 lbs:	$d = 40NEWQD^{1/3}$
100,000 lbs < NEWQD $\leq$ 250,000 lbs:	$d = 2.42NEWQD^{0.577}$
250,000 lbs < NEWQD:	$d = 50NEWQD^{1/3}$
1,243 ft < d $\leq$ 1,857 ft:	$NEWQD = d^3/64{,}000$
1,857 ft < d $\leq$ 3,150 ft:	$NEWQD = 0.2162d^{1.7331}$
3,150 ft < d:	$NEWQD = d^3/125{,}000$

4. Computed as 60 percent of applicable IBD.

Table 12.7. HD 1.1 ILD from an ECM.

NEWQD (lbs)	BARRICADED ILD (ft)			UNBARRICADED ILD (ft)		
	FRONT[1]	SIDE[2]	REAR[3]	FRONT[4]	SIDE[5]	REAR[6]
50	37	26	22	66	59	44
70	41	29	25	74	66	49
100	46	32	28	84	74	56
150	53	37	32	96	85	64
200	58	41	35	105	94	70
300	67	47	40	120	107	80
500	79	56	48	143	127	95
700	89	62	53	160	142	107
1,000	100	70	60	180	160	120
1,500	114	80	69	206	183	137
2,000	126	88	76	227	202	151
3,000	144	101	87	260	231	173
5,000	171	120	103	308	274	205
7,000	191	134	115	344	306	230
10,000	215	151	129	388	345	259
15,000	247	173	148	444	395	296
20,000	271	190	163	489	434	326
30,000	311	218	186	559	497	373
50,000	368	258	221	663	589	442
70,000	412	288	247	742	659	495
100,000	464	325	278	835	743	557
150,000	531	372	319	956	850	653
200,000	585	409	351	1,053	936	746
300,000	669	469	402	1,205	1,071	937
500,000	715	714	714	1,429	1,429	1,429

Notes for Table 12.7

1. NEWQD in lbs, d in ft

   NEWQD $\leq$ 300,000: $d = 10 \times NEWQD^{1/3}$

   300,000 lbs < NEWQD $\leq$ 500,000 lbs:
   $d = (13.659 - 1.6479 \times 10^{-5} \times NEWQD + 1.4358 \times 10^{-11} \times NEWQD^2) \times NEWQD^{1/3}$

   $d \leq 669$ ft: $NEWQD = d^3/1000$
   669 ft < d $\leq$ 715 ft:
   $NEWQD = 1.50138 \times 10^8 - 6.73914 \times 10^5 \times d + 1002.9 \times d^2 - 0.4938 \times d^3$

2. NEWQD in lbs, d in ft

   NEWQD $\leq$ 300,000 lbs: $d = 7 \times NEWQD^{1/3}$

   300,000 lbs < NEWQD $\leq$ 400,000 lbs:
   $d = (1.0848 + 1.986 \times 10^{-5} \times NEWQD) \times NEWQD^{1/3}$

   NEWQD > 400,000 lbs: $d = 9 \times NEWQD^{1/3}$
   $d \leq 469$ ft: $NEWQD = d^3/343$
   469 ft < d $\leq$ 663 ft: $NEWQD = 57{,}424 + 515.89 \times d$

$d > 663$ ft: $NEWQD = d^3/729$

3. NEWQD in lbs, d in ft

$NEWQD \leq 300{,}000$ lbs: $d = 6 \times NEWQD^{1/3}$

$300{,}000$ lbs $< NEWQD \leq 400{,}000$ lbs:
$d = (-3.059 + 3.0228 \times 10^{-5} \times NEWQD) \times NEWQD^{1/3}$

$NEWQD > 400{,}000$ lbs: $d = 9 \times NEWQD^{1/3}$
$d \leq 402$ ft: $NEWQD = d^3/216$
402 ft $< d \leq 665$ ft: $NEWQD = 148{,}160 + 379.7 \times d$
$d > 665$ ft: $NEWQD = d^3/729$

4. NEWQD in lbs, d in ft

$NEWQD \leq 500{,}000$ lbs: $d = 18 \times NEWQD^{1/3}$
$d \leq 1429$ ft: $NEWQD = d^3/5{,}832$

5. NEWQD in lbs, d in ft

$NEWQD \leq 300{,}000$ lbs: $d = 16 \times NEWQD^{1/3}$

$300{,}000$ lbs $< NEWQD \leq 400{,}000$ lbs:
$d = (9.9683 + 2.0135 \times 10^{-5} \times NEWQD) \times NEWQD^{1/3}$

$NEWQD > 400{,}000$ lbs: $d = 18 \times NEWQD^{1/3}$
$d \leq 1071$ ft: $NEWQD = d^3/4{,}096$
1071 ft $< d \leq 1328$ ft: $NEWQD = -118{,}180 + 390.35 \times d$
$d > 1328$ ft: $NEWQD = d^3/5{,}832$

6. NEWQD in lbs, d in ft

$NEWQD \leq 100{,}000$ lbs: $d = 12 \times NEWQD^{1/3}$

$100{,}000$ lbs $< NEWQD \leq 300{,}000$ lbs:
$d = (11.521 + 1.9918 \times 10^{-6} \times NEWQD + 2.0947 \times 10^{-11} \times NEWQD^2) \times NEWQD^{1/3}$

$300{,}000$ lbs $< NEWQD \leq 400{,}000$ lbs:
$d = (1.9389 + 4.0227 \times 10^{-5} \times NEWQD) \times NEWQD^{1/3}$

$NEWQD > 400{,}000$ lbs: $d = 18 \times NEWQD^{1/3}$
$d \leq 557$ ft: $NEWQD = d^3/1{,}728$
557 ft $< d \leq 938$ ft: $NEWQD = -193{,}080 + 526.83 \times d$
938 ft $< d \leq 1328$ ft: $NEWQD = 60{,}778 + 255.83 \times d$
$d > 1328$ ft: $NEWQD = d^3/5{,}832$

Table 12.8. HD 1.1 ILD other than ECM.

NEWQD (lbs)	BARRICADED ILD (ft) [1]	UNBARRICADED ILD (ft) [2]	NEWQD (lbs)	BARRICADED ILD (ft) [1]	UNBARRICADED ILD (ft) [2]
50[3]	33	66	20,000	244	489
70	37	74	30,000	280	559
100	42	84	50,000	332	663
150	48	96	70,000	371	742
200	53	105	100,000	418	835
300	60	120	150,000	478	956
500	71	143	200,000	526	1,053
700	80	160	300,000	602	1,205
1,000	90	180	500,000[4]	714	1,429
1,500	103	206	700,000[4]	799	1,598
2,000	113	227	1,000,000[4]	900	1,800
3,000	130	260	1,500,000[4]	1,030	2,060
5,000	154	308	2,000,000[4]	1,134	2,268
7,000	172	344	3,000,000[4]	1,298	2,596
10,000	194	388	5,000,000[4]	1,539	3,078
15,000	222	444			

Notes for Table 12.8

1. d in ft, NEWQD in lbs
   NEWQD $\geq$ 50 lbs: $d = 9 \times NEWQD^{1/3}$
   d $\geq$ 33ft: $NEWQD = d^3/729$
   d < 33 ft: see note 3
   NEWQD < 50 lbs: see note 3

2. d in ft, NEWQD in lbs
   NEWQD $\geq$ 50 lbs: $d = 18 \times NEWQD^{1/3}$
   d $\geq$ 66ft: $NEWQD = d^3/5{,}832$
   d < 66 ft: see note 3
   NEWQD < 50 lbs: see note 3

3. For less than 50 lbs, less distance may be used when structures, blast mats, and the like can completely contain fragments and debris. This table is not applicable when blast, fragments, and debris are completely confined, as in certain test firing barricades. Note: UFC 3-340-02, *Structures to Resist the Effects of Accidental Explosions*, may be used to prove complete confinement of blast, fragments, and debris. Continue using K18 without a minimum distance for specific situations having approved guidance such as Reduced MCEs for F-15/F-16 Aircraft and the 15 Jan 2003 SDW memo.

4. Quantities above 500,000 lbs NEWQD are authorized only for HD 1.1 energetic liquids.

Table 12.9. HD 1.2.1 QD in the Open.

EXPLOSIVE WEIGHT [1] (lbs)	IBD [2] (ft)	PTRD [3] (ft)	ILD [4] (ft)	EXPLOSIVE WEIGHT [1] (lbs)	IBD [2] (ft)	PTRD [3] (ft)	ILD [4] (ft)
2	200	200	200	1,500	774	464	278
3	200	200	200	2,000	824	494	296
4	200	200	200	3,000	893	536	321
5	200	200	200	5,000	978	587	352
7	200	200	200	7,000	1,033	620	372
10	200	200	200	10,000	1,090	654	392
15	200	200	200	15,000	1,154	692	415
20	200	200	200	20,000	1,198	719	431
30	200	200	200	30,000	1,260	756	453
50	200	200	200	50,000	1,335	801	481
70	200	200	200	70,000	1,383	830	498
100	268	200	200	100,000	1,433	860	516
150	348	209	200	150,000	1,489	893	536
200	403	242	200	200,000	1,528	917	550
300	481	288	200	300,000	1,581	949	569
500	576	346	207	500,000	1,646	988	593
700	638	383	230	> 500,000	Note 2	Note 3	Note 4
1,000	702	421	253				

Notes for Table 12.9

1. Explosive Weight = Number of Items x NEWQD.

2. IBD in ft, NEWQD in lbs; ln is natural logarithm; exp (x) is e^x.

71 lbs < Explosive Weight

IBD = -735.186 + [237.559 x (ln(Number of items x NEWQD))] – [4.274 x (ln(Number of items x NEWQD))^2] with a minimum of 200 ft

200 ft < IBD < 2016 ft

Number of items x NEWQD = exp[27.791 – (600.392 – 0.234 x IBD)$^{1/2}$]

3. PTRD = 60% of IBD with a minimum distance equal to the IMD given in Table 12.2 treating the ES as an AGM (H or L).

4. ILD = 36% of IBD with a minimum distance equal to the IMD given in Table 12.2 treating the ES as an AGM.

Table 12.10. HDD for HD 1.2.1 Stored in Structures Which Can Contribute to the Debris Hazard.

MCE [1] (lbs)	HAZARDOUS DEBRIS DISTANCE [2] (ft)	PTRD [3] (ft)	ILD [4] (ft)
≤ 31	200	200	200
50	388	233	200
70	519	311	200
100	658	395	237
110	695	417	251
150	815	489	293
200	927	556	334
300	1,085	651	391
400	1,197	718	431
450	1,243	746	447
> 450	1,250	750	450

Notes for Table 12.10

1. Per paragraph 3.16.4., HD 1.2.1 MCEs will be included in the JHCS for each HD 1.2.1 item. If the MCE is not available, use the default MCE determined by multiplying NEWQD in a single container by three.

2. MCE in lbs, HDD in ft; ln is natural logarithm; exp [x] is e^x.

   31 lbs < MCE ≤ 450 lbs

   HDD = -1133.9 + [389 x ln(MCE)] with a minimum of 200 ft

   200 ft < HDD ≤ 1250 ft

   MCE = exp [(HDD/389) + 2.914]

3. PTRD = 60% of IBD with a minimum distance equal to the IMD given in Table 12.2 treating the ES as an AGM (H or L).

4. ILD = 36% of IBD with a minimum distance equal to the IMD given in Table 12.2 treating the ES as an AGM.

Table 12.11. HD 1.2.2 QD. 5

EXPLOSIVE WEIGHT [1] (lbs)	IBD [2] (ft)	PTRD [3] (ft)	ILD [4] (ft)	EXPLOSIVE WEIGHT [1] (lbs)	IBD [2] (ft)	PTRD [3] (ft)	ILD [4] (ft)
1	100	100	100	1,000	238	143	100
1.5	100	100	100	1,500	262	157	100
2	100	100	100	2,000	279	168	101
3	100	100	100	3,000	306	183	110
5	100	100	100	5,000	341	205	123
7	100	100	100	7,000	366	220	132
10	100	100	100	10,000	394	236	142
15	100	100	100	15,000	427	256	154
20	100	100	100	20,000	451	271	162
30	107	100	100	30,000	487	292	175
50	118	100	100	50,000	535	321	193
70	127	100	100	70,000	568	341	204
100	138	100	100	100,000	604	362	217
150	152	100	100	150,000	647	388	233
200	162	100	100	200,000	678	407	244
300	179	107	100	300,000	723	434	260
500	202	121	100	500,000	783	470	282
700	219	132	100	> 500,000	Note 2	Note 3	Note 4

Notes for Table 12.11

1. Explosive Weight = Number of Items x NEWQD.

2. IBD in ft, NEWQD in lbs; ln is natural logarithm; exp (x) is e^x.

20 lbs < Explosive Weight

IBD = 101.649 – [15.934 x (ln(Number of items x NEWQD))] + [5.173 x (ln(Number of items x NEWQD))^2] with a minimum of 100 ft

100 ft < IBD < 1240 ft

Number of items x NEWQD = exp [1.5401 + (-17.278 + 0.1933 x IBD)$^{1/2}$]

3. PTRD = 60% of IBD with a minimum distance equal to the IMD given in Table 12.2 treating the ES as an AGM (H or L).

4. ILD = 36% of IBD with a minimum distance equal to the IMD given in Table 12.2 treating the ES as an AGM.

5. See chapter 11 for storage and operations involving limited quantities of HD 1.2.2.

Table 12.12. HD 1.3 QD. 6

NEWQD (lbs)	IBD & PTRD [1,2] (ft)	IMD & ILD [3,4] (ft)	NEWQD (lbs)	IBD & PTRD [1,2] (ft)	IMD & ILD [3,4] (ft)
≤ 1,000 [5]	75	50	70,000	268	181
1,500	82	56	100,000	300	204
2,000	89	61	150,000	346	234
3,000	101	68	200,000	385	260
5,000	117	80	300,000	454	303
7,000	130	88	500,000	569	372
10,000	145	98	700,000	668	428
15,000	164	112	1,000,000	800	500
20,000	180	122	1,500,000	916	572
30,000	204	138	2,000,000	1,008	630
50,000	240	163			

Notes for Table 12.12

1. Some HD 1.3 items have a parenthetical value (xx). For such items, the IBD/PTRD will be the greater of the parenthetical value, or the IBD/PTRD given in this table.

2. NEWQD in lbs, d in ft

NEWQD ≤ 1,000 lbs: $d_{IBD,PTRD} = 75$

1,000 lbs < NEWQD ≤ 96,000 lbs:
$d_{IBD,PTRD} = \exp[2.47 + 0.2368 \times (\ln(NEWQD)) + 0.00384 \times (\ln(NEWQD))^2]$ with a minimum distance of 75 ft

96,000 lbs < NEWQD ≤ 1,000,000 lbs:
$d_{IBD,PTRD} = \exp[7.2297 - 0.5984 \times (\ln(NEWQD)) + 0.04046 \times (\ln(NEWQD))^2]$

NEWQD > 1,000,000 lbs: $d_{IBD,PTRD} = 8 \times NEWQD^{1/3}$

75 ft ≤ $d_{IBD,PTRD}$ ≤ 296 ft:
$NEWQD = \exp[-30.833 + (307.465 + 260.417 \times (\ln(d_{IBD,PTRD})))^{1/2}]$ with a minimum NEWQD of 1,000 lbs

296 ft < $d_{IBD,PTRD}$ ≤ 800 ft:
$NEWQD = \exp[7.395 + (-124.002 + 24.716 \times (\ln(d_{IBD,PTRD})))^{1/2}]$

800 ft < $d_{IBD,PTRD}$: $NEWQD = d_{IBD,PTRD}^3/512$

3. NEWQD in lbs, d in ft

NEWQD ≤ 1,000 lbs: $d_{IMD,ILD} = 50$

1,000 lbs < NEWQD ≤ 84,000 lbs:
$d_{IMD,ILD} = \exp[2.0325 + 0.2488 \times (\ln(NEWQD)) + 0.00313 \times (\ln(NEWQD))^2]$ with a minimum distance of 50 ft

84,000 lbs < NEWQD $\leq$ 1,000,000 lbs:

$d_{IMD,ILD} = \exp[4.338 - 0.1695 \times (\ln(NEWQD)) + 0.0221 \times (\ln(NEWQD))^2]$

1,000,000 lbs < NEWQD: $d_{IMD,ILD} = 5 \times NEWQD^{1/3}$

50 ft $\leq d_{IMD,ILD} \leq$ 192 ft:

$NEWQD = \exp[-39.744 + (930.257 + 319.49 \times (\ln(d_{IMD,ILD})))^{1/2}]$ with a minimum NEWQD of 1,000 lbs

192 ft < $d_{IMD,ILD} \leq$ 500 ft:

$NEWQD = \exp[3.834 + (-181.58 + 45.249 \times (\ln(d_{IMD,ILD})))^{1/2}]$

500 ft < $d_{IMD,ILD}$: $NEWQD = d_{IMD,ILD}^3/125$

4. Existing ECM, regardless of orientation, that meet the construction and barricading requirements and meet separation requirements one from another for a minimum of 100 lbs NEWQD of HD 1.1 (using the ECM-to-ECM QD criteria in Table 12..1) may be used to their physical storage capacity for HD 1.3, provided all other QD relationships are sited per Table 12.12 for the HD 1.3 NEWQD.

5. For quantities less than 1,000 lbs, the required distances are those specified for 1,000 lbs. The use of lesser distances may be approved when supported by test data and/or analyses.

6. See chapter 11 for storage and operations involving limited quantities of HD 1.3.

Table 12.13. HD 1.4 QD. 1,8

NEWQD[2] (lbs)	IBD & PTRD[3] (ft)	ILD[4,5] (ft)	AGS (L) IMD[5,6] (ft)	AGS (H) & (H/R) IMD[5,7] (ft)	ECM IMD[5,12] (ft)
$\leq$ 3000	75	50	50	0 to and from	1. 0 to and from the Sides & Rear 2. See note 11 for the Front
> 3000[9]	100	100/50[10]	100/50[10]		

Notes for Table 12.13

1. HD 1.4 AE may be stored in a general supplies warehouse area rather than in an AE storage area. When storing in a general supplies warehouse area, any weatherproof warehouse structure may serve as an HD 1.4 magazine. Such a structure will be separated from all other warehouses per the AGS (L) IMD column of this table.

2. See subparagraph 12.7.1.1. for the applicability of HD 1.4 QD criteria and the determination of NEWQD when HD 1.4 and other HD AE are located in the same site.

3. IBD and PTRD are 50ft from the sides and rear of an ECM. IBD and PTRD are 50 ft from an AGS (H), an AGS (H/R), and an ECM front that meets the definition of AGS (H) as defined in the legend for Table 12.2.; doors and other openings shall be barricaded IAW section 6E, or the IBD or PTRD column of this table applied from them.

4. ILD is 0 ft from the sides and rear of an ECM. ILD is 0 ft from an AGS (H), an AGS (H/R), and an ECM front that meets the definition of AGS (H) as defined in the legend for Table 12.2.; doors and other openings shall be barricaded IAW section 6E, or the ILD column of this table applied from these doors and openings.

5. Magazines storing only HD 1.4 AE may be located at these IM or IL distances from all other magazines or operating locations regardless of the HD or NEWQD authorized in those adjacent structures. Because the HD 1.4 AE may be destroyed as the result of an accident involving the assets in those adjacent structures, the responsible commander must accept the potential loss of the HD 1.4 stocks and the storage structure. The commander's risk acceptance must be documented by letter (i.e., signed by the commander stating he/she understands and accepts the potential loss of the HD 1.4 stocks and the storage structure in the event of a mishap in an adjacent explosives facility) and submitted as part of the explosives site plan. A new risk acceptance letter is not required when a new adjacent explosives facility is sited, as long as the original letter documented that other such structures might be added in the future.

6. Applies to all AGS (L) as defined in the legend for Table 12.2.

7. Applies to all AGS (H) and AGS (H/R) as defined in the legend for Table 12.2. Doors and other openings shall be barricaded IA W section 6E, or the AGS (L) IMD column of this table applied to and from these doors and openings.

8. HD 1.4S may be stored (including associated handling) without regard to QD criteria (see **paragraphs 12.29.3** and 2.23). Additionally, for reasons of operational necessity, limited quantities of HD 1.4 AE (e.g., small arms AE and riot control munitions) may be stored within facilities (e.g., hangars, arms rooms, and operating buildings) without regard to QD. See chapter 11 for storage and operations involving limited quantities of HD 1.4.

9. There is no upper limit on the NEWQD specifically required for safety reasons.

10. Use the smaller distance when the ES is of non-combustible construction. Treat combat aircraft and explosives-loaded cargo aircraft as non-combustible structures.

11. Apply the appropriate AGS column of this table based on whether the ECM front meets the definition of AGS (L) or AGS (H), as defined in the legend for Table 12.2.

12. ECMs may be used to their physical capacity for HD 1.4 provided they meet separation requirements for a minimum of 100 lbs of HD 1.1, and provided separations to other exposures comply with applicable QD criteria.

Table 12.14. HD 1.6 QD. 1

NEWQD (lbs)	IBD & PTRD [2,3] (ft)	IMD & ILD [2,4] (ft)	NEWQD (lbs)	IBD & PTRD [2,3] (ft)	IMD & ILD [2,4] (ft)
≤ 100 [5]	37	23	10,000	172	108
150	43	27	15,000	197	123
200	47	29	20,000	217	136
300	54	33	30,000	249	155
500	63	40	50,000	295	184
700	71	44	70,000	330	206
1,000	80	50	100,000	371	232
1,500	92	57	150,000	425	266
2,000	101	63	200,000	468	292
3,000	115	72	300,000	536	335
5,000	137	85	500,000	635	397
7,000	153	96			

Notes for Table 12.14

1. When specifically approved by AFSC/SEW, for HD 1.6 AE packed in non-flammable pallets or packing and stored in an ECM, the following QD apply, unless a lesser distance is permitted by this table for aboveground sites (**Note:** These lesser distances can be applied to ECM storage):

$D_{IBD,PTRD}$ = 100 ft
D_{ILD} = 50 ft
D_{IMD} = no specific requirement

2. Single round distance for airblast applies as a minimum; D in ft, NEWQD in lbs.

$D_{IBD,PTRD} = 40W^{1/3}$ based on the NEWQD for a single round of AE
$D_{IMD,\ ILD} = 18W^{1/3}$ based on the NEWQD for a single round of AE

3. D in ft, NEWQD in lbs

$D_{IBD,PTRD} = 8W^{1/3}$
$NEWQD = D_{IBD,PTRD}^{3}/512$

4. D in ft, NEWQD in lbs

$D_{IMD,\ ILD} = 5W^{/3}$
$NEWQD = D_{IMD,\ ILD}^{3}/125$

5. For quantities less than 100 lbs, the required distances are those specified for 100 lbs. The use of lesser distances may be approved when supported by test data and/or analyses.

Table 12.15. Hazard Classifications and Minimum QD for Energetic Liquids.

ENERGETIC LIQUID	OSHA/NFPA FUEL[1] OR OXIDIZER[2] CLASS	DoD STORAGE HAZARD CLASS	MINIMUM QD[3]
Hydrogen Peroxide, > 60%	3 or 4[4]	5.1 (LA)	800[5] ft or Table 12.19
IRFNA (Inhibited Red Fuming Nitric Acid)	3	8 (LA)	Table 12.19
Nitrogen Tetroxide/MON (Mixed oxides of nitrogen)	2	2.3 (LA)	Table 12.19
Liquid Oxygen	N/A	2.2 (LA)	Table 12.20
RP-1	II	3 (LB)	Table 12.18
JP-10	II	3J (LB)	Table 12.18
Liquid Hydrogen	N/A	2.1 (LB)	Table 12.21
Hydrazine, >64%	II	8 (LC)	800[5] or 300[6] ft or Note 7
Aerozine 50 (50% N_2H_4/50% UDMH) (Unsymmetric dimethylhydrazine)	I B	6.1 (LC)	800[5] or 300[6] ft or Note 7
Methylhydrazine	I B	6.1 (LC)	800[5] or 300[6] ft or Note 7
UDMH	I B	6.1 (LC)	Table 12.18
Ethylene Oxide	I A	2.3 (LD)	HD 1.1 QD[8] with TNT Equiv = 100%, or 800[5] or 300[6] ft
Propylene Oxide	I A	3 (LD)	HD 1.1 QD[8] with TNT Equiv = 100%, or 800[5] or 300[6] ft
Nitromethane	I C	3 (LE)	HD 1.1 QD with TNT Equiv = 100%[9] or Table 12.18
Hydroxylammonium Nitrate (HAN)	2	8 (LE)	800[5] ft or Table 12.19
XM-46 (HAN Monopropellant)	N/A	1.3C (LE)	800[5] ft or use HD 1.3 QD
Otto Fuel II	III B	9 (LE)	HD 1.1 QD[10] with TNT Equiv = 100%, or 150[11] ft or Table 12.18
Halogen Fluorides (ClF_3/ClF_5)	4	2.3 (LE)	Table 12.19
Liquid Fluorine	4	2.3 (LE)	Table 12.19
Nitrogen Trifluoride	4	2.2 (LE)	Table 12.19
Nitrate esters (e.g., NG, TMETN, DEGDN, TEGDN, BTTN)	N/A	1.1D (LE)	HD 1.1 QD with TNT Equiv = 100%

Notes for Table 12.15

1. Flammable or combustible liquid classification index based on flash point and boiling point versus criteria as specified in 29 CFR 1910.106 (OSHA) and NFPA 30 Flammable and Combustible Liquids Code. Primary descriptor is a Roman numeral, possibly with an additional letter.
2. NFPA oxidizer classification index as described in NFPA 430 Code for the Storage of Liquid and Solid Oxidizers. Descriptor is an ordinary number.
3. Positive measures for spill containment/control will be taken for isolated storage of energetic liquids in accordance with applicable OSHA and NFPA guidance (referenced in Tables 12.18 through 12.20). For flammable energetic liquids and liquid oxidizers where only minimum blast or fragment distances are specified, applicable OSHA and/or NFPA guidance referenced in Tables 12.18 and 12.19, respectively, should also be used.
4. Hydrogen peroxide solutions of concentration greater than 91% are NFPA Class 4 oxidizers.

5. Should be used as a default value, unless otherwise hazard classified, when the material is packaged in small (non-bulk) shipping containers, portable ground support equipment, small aerospace flight vehicle propellant tanks, or similar pressure vessels that provide heavy confinement (burst pressure greater than 100 psi).

6. Should be used as a default value, unless otherwise hazard classified, when the material is packaged in small (non-bulk) shipping containers (DOT 5C or equivalent), portable ground support equipment, small aerospace flight vehicle propellant tanks, or similar pressure vessels providing a lower level of confinement (burst pressure less than or equal to 100 psi and if adequate protection from fragments is not provided from terrain, effective barricades, nets, or other physical means (lightweight building construction is not adequate). If protection from fragments is provided, use the IBD/PTRD "Protected" column of Table 12.21.

7. For large ready, bulk, or rest storage tanks (as defined in paragraphs 12.36.7, 12.36.9, and 12.36.10), use Table 12.21.

8. Where there is a reasonable risk of vapor cloud explosion of large quantities (for example, in bulk tank storage).

9. Technical grade nitromethane in unit quantities of 55 gallons or less in DOT approved containers listed in 49CFR173.202 may be stored as flammable liquids (Table 12.18) provided the following apply:

a. Packages are stored only one tier high.

b. Packages are protected from direct rays of sun.

c. Maximum storage life of two years, unless storage life tests indicate product continues to meet purchase specification. Such tests are to be repeated at one-year intervals thereafter.

10. For underwater static test stands, when operated at hydrostatic pressure above 50 psig, or for propellant tanks or other vessels having burst pressures of greater than 100 psig without acceptable pressure relief devices (unless otherwise hazard classified). For underwater test stands, the TNT equivalence (MCE) should include the total energetic liquids weight in all pumps and plumbing, as well as the weight of energetic liquids held in tankage (under the test cell hydrostatic pressure) unless acceptable mitigation measures such as fuel line detonation arrestors and/or fuel tank isolation/barricading are used (as determined by hazard analysis).

11. Should be used as a default value, unless otherwise hazard classified, when the material is packaged in small vehicle propellant tanks, small (non-bulk) shipping containers, portable ground support equipment, or similar pressure vessels that provide relatively heavy confinement (burst pressure between 50 – 100 psig) without acceptable pressure relief devices.

Table 12.16. Factors to Use When Converting Energetic Liquid Densities.

ITEM	DENSITY (lb/gal)	TEMPERATURE (degrees F)
Chlorine pentafluoride	14.8	77
Chlorine trifluoride	15.1	77
Ethyl alcohol	6.6	68
Ethylene oxide	7.4	51
Fluorine (liquid)	12.6	-306
HAN monopropellants	11.9	77
HAN solution (25 to 95 wt %)	10.0 to 13.4	68
Hydrazine	8.4	68
Hydrogen peroxide (90%)	11.6	77
JP-10	7.8	60
Liquid hydrogen	0.59	-423
Liquid oxygen	9.5	-297
Monomethyl hydrazine	7.3	68
Nitrogen tetroxide	12.1	68
Nitrogen trifluoride	12.8	-200
Nitromethane	9.5	68
Otto Fuel II	10.3	77
Propylene oxide	7.2	32
Red fuming nitric acid (IRFNA)	12.9	77
RP-1	6.8	68
UDMH	6.6	68
UDMH/hydrazine	7.5	77

NOTE: 1. Conversion of quantities of energetic liquids: F**rom gallons to lbs:** lbs of energetic liquids = gallons X density of energetic liquids (lbs/gal)

Table 12.17. Energetic Liquid Explosive Equivalents. 1,2, 3, 4, 5

ENERGETIC LIQUIDS	TNT EQUIVALENCE	
	STATIC TEST STANDS	RANGE LAUNCH
LO_2/LH_2	See Note 6	See Note 6
$LO_2/LH_2 + LO_2$/RP-1	Sum of (see Note 6 for LO_2/LH_2) + (10% for LO_2/RP-1)	Sum of (see Note 6 for LO_2/LH_2) + (20% for LO_2/RP-1)
LO_2/RP-1	10%	20% up to 500,000 lbs plus 10% over 500,000 lbs
IRFNA/UDMH [7]	10%	10%
N_20_4/UDMH + N_2H_4 [7]	5%	10%
N_20_4 liquid oxidizer + PBAN solid fuel (Hybrid propellants)	15% [8]	15% [8]
Nitromethane (alone or in combination)	100%	100%
Otto Fuel II	100% [9]	
Ethylene Oxide	100% [10]	100% [10]

Notes for Table 12.17

1. The percentage factors given in the table are to be used to determine equivalencies of energetic liquids mixtures at static test stands and range launch pads when such energetic liquids are located aboveground and are unconfined except for their tankage. Other configurations will be considered on an individual basis to determine equivalencies.

2. The explosives equivalent weight calculated by the use of this table will be added to any non-nuclear explosive weight aboard before distances can be determined from Tables 12.6 and 12.8.
3. These equivalencies apply also for the following substitutions:

Alcohols or other hydrocarbons for RP-1.

H_2O_2 for LO_2 (only when LO_2 is in combination with RP-1 or equivalent hydrocarbon fuel).

MMH for N_2H_4, UDMH, or combinations of the two.

4. For quantities of energetic liquids up to but not over the equivalent of 100 lbs of AE, the distance will be determined on an individual basis by AFSC. All personnel and facilities, whether involved in the operation or not, will be protected by operating procedures, equipment design, shielding, barricading, or other suitable means.
5. Distances less than intraline are not specified. Where a number of prepackaged energetic liquid units are stored together, separation distance to other storage facilities will be determined on an individual basis by AFSC, taking into consideration normal hazard classification procedures.
6. For siting launch vehicles and static test stands, explosive equivalent weight is the larger of:

(a) The weight equal to $8W^{2/3}$ where W is the weight of LO_2/LH_2; or

(b) 14 percent of the LO_2/LH_2 weight.

(**Note**: For these calculations, use the total weight of LO_2/LH_2 present in the launch vehicle, or the total weight in test stand run tankage and piping for which there is no positive means to prevent mixing in credible mishaps. When it can be reliably demonstrated that the MCE involves a lesser quantity of energetic liquids subject to involvement in a single reaction, the lesser quantity may be used in determining the explosive equivalent yield. When siting is based on a quantity less than the total energetic liquids present, the MCE and associated explosive yield analysis must be documented in an approved site plan (see Chapter 14).)
7. These are hypergolic combinations.
8. Explosive equivalency of the hybrid rocket system N_2O_4 liquid oxidizer combined with PBAN (polybutadiene-acrylic acid-acronitrile) solid fuel was evaluated as 15 percent for an explosive donor accident scenario, 5 percent for a high velocity impact scenario, and less than 0.01 percent (negligible) for static mixing (tower drop) failures in accordance with NFPA 251, *Standard Methods of Tests of Endurance of Building Construction and Materials*.
9. See Note 10 of Table 12.15.
10. See Note 8 of Table 12.15.

Table 12.18. QD Criteria for OSHA/NFPA Class I – III Flammable and Combustible Energetic Liquids Storage in Detached Buildings or Tanks. 1,2

QUANTITY	IBD/PTRD (ft)	ILD/ABOVEGROUND IMD (ft)
Unlimited [3]	50 [4,5]	Note 6

Notes for Table 12.18

1. Other guidelines for diking, tank or container construction, tank venting, and facility construction apply (except for Class III B combustible liquids, e.g. Otto Fuel II). Refer to NFPA 30, Flammable and Combustible Liquids Code and NFPA 430, Code for the Storage of Liquid and Solid Oxidizers for further guidance on liquid storage and fire protection.
2. Refer to NFPA 30, Flammable and Combustible Liquids Code and NFPA 30, *Flammable and Combustible Liquids Code* and NFPA 430, Code for the Storage of Liquid and Solid Oxidizers for definition and explanation of OSHA/NFPA classification of flammable and combustible liquids.
3. Guidelines on interior storage configuration (for container storage inside buildings) also apply with the following exceptions:
(a) If the storage building is located at least 100 ft fom any exposed building (under the direct jurisdiction of a fire protection organization) or property line; or
(b) If the storage building is located at least 200 ft from any exposed building (not under the direct jurisdiction of a fire protection organization) or property line; or
(c) for combustible liquids that will not exhibit sustained burning in bulk form, e.g. Otto Fuel II, as determined through ASTM D 92 Standard Test Method for Flash and Fire Points by Cleveland Open Cup or comparable testing. Refer to NFPA 30, Flammable and Combustible Liquids Code and NFPA 430, Code for the Storage of Liquid and Solid Oxidizers for further guidance on liquid storage and fire protection.
4. For container storage inside of a building, IBD/PTR distances may be less than 50 ft (to a minimum of 10 ft) if the storage building is constructed of fire resistive exterior walls having an NFPA Fire Resistance rating of two hours or more according to NFPA 251, Standard Methods of Tests of Endurance of Building Construction and Materials.
5. For large tank storage, QD may be 25 ft for tank capacities up to 100,000 gallons, and 37.5 ft for capacities between 100,001 and 500,000 gallons.
6. For flammable liquids container storage inside of a building, ILD/Aboveground IMD is 50 ft (except as in Note 4), or for adjacent incompatible oxidizer storage, distances specified for energetic liquid oxidizers (Table 12.19) or oxygen (Table 12.20). For flammable liquids storage in fixed or large portable tanks, ILD/Aboveground IMD is either (1) for compatible energetic liquids, equal to one sixth of the sum of the diameters of the two adjacent tanks, or distances specified in Note 5 for adjacent container storage inside of a building; or (2) for adjacent incompatible oxidizer storage, distances specified for energetic liquid oxidizers (Table 12.19) or oxygen (Table 12.20). ECM may be used to their physical capacity for storing flammable energetic liquids provided they comply with the construction and siting requirements of Chapter 6 and Chapter 12, respectively for Hazard Division 1.1. ECM must be sited for a minimum of 100 lbs of HD 1.1 items using Tables 12.7 and 12.1.

Table 12.19. QD Criteria for Energetic Liquid Oxidizer (excluding Liquid Oxygen) Storage in Detached Buildings or Tanks. 1, 2

NFPA OXIDIZER CLASS [3]	QUANTITY (lbs)	IBD/PTRD/ILD/ ABOVEGROUND IMD (ft)
2	up to 600,000	50
3	up to 400,000	75
4 [4,5]	≤ 50	75
	70	76
	100	79
	150	84
	200	89
	300	98
	500	114
	700	128
	1,000	147
	1,500	175
	2,000 [6]	200
	3,000	246
	5,000	328
	7,000	404
	10,000	510
	15,000	592
	20,000	651
	30,000	746
	50,000	884
	70,000	989
	100,000	1,114
	150,000	1,275
	200,000	1,404
	300,000	1,607
	500,000	1,905

Notes for Table 12.19

1. QD requirements do not apply to the storage of NFPA Class 2 and 3 oxidizers when all requirements of NFPA 430, Code for the Storage of Liquid and Solid Oxidizers, have been met.
2. Other requirements for interior storage configuration, building construction, diking, container materials, facility venting, etc. also apply. Refer to NFPA 430, Code for the Storage of Liquid and Solid Oxidizers for further guidance on oxidizer storage and fire protection.
3. Refer to NFPA 430, Code for the Storage of Liquid and Solid Oxidizers for definition and explanation of NFPA classification of oxidizers.
4. Multiple tanks containing NFPA Class 4 oxidizers may be located at distances less than those specified in the table; however, if the tanks are not separated from each other by 10 percent of the distance specified for the largest tank, then the total contents of all tanks will be used to calculate distances to other exposures.
5. The equations given below may be used to determine distance/weights for other quantities:

Quantity (W) in lbs, distance in ft

$W \leq 10{,}000$ lbs: Distance $= 149.3 \times W^{(-0.41+0.059*\ln(W))}$

$W > 10{,}000$ lbs: Distance $= 24 \times W^{1/3}$

Distance > 75 ft:
$W = \exp[-134.286 + 71.998 \times (\ln(\text{Distance})) - 12.363 \times (\ln(\text{Distance}))^2 + 0.7229 \times (\ln(\text{Distance}))^3]$

6. NFPA 430 requires sprinkler protection to be provided for storage of greater than 2,000 lbs of NFPA Class 4 oxidizers inside of a building (NFPA 430, Code for the Storage of Liquid and Solid Oxidizers).

Table 12.20. QD Criteria for Liquid Oxygen Storage in Detached Buildings or Tanks. 1, 2

QUANTITY	IBD/PTRD (ft)	ILD/ABOVEGROUND IMD (ft)
Unlimited [3]	100	100 [4]

Notes for Table 12.20

1. Per NFPA 251, Standard Methods of Tests of Endurance of Building Construction and Materials, distances do not apply where a protective structure having an NFPA fire resistance rating of at least two hours interrupts the line of sight between the oxygen system and the exposure. Refer to Title 29 Code of Federal Regulations, Part 1910, Subpart H – Hazardous Materials, current edition and NFPA 50, Standard for Bulk Oxygen Systems at Consumer Sites for further guidance.
2. Additional guidelines relating to equipment assembly and installation, facility design (diking), and other fire protection issues also apply. Refer to Title 29 Code of Federal Regulations, Part 1910, Subpart H – Hazardous Materials, current edition and NFPA 50, Standard for Bulk Oxygen Systems at Consumer Sites for further guidance.
3. QD is independent of oxygen quantity.
4. Minimum ILD/IMD distance between adjacent compatible energetic liquids storage is 50 ft.

Table 12.21. QD Criteria for Liquid Hydrogen and Bulk Quantities of Hydrazines 1

PROPELLANT WEIGHT (W) (lbs)	IBD/PTRD		ILD/ABOVEGROUND IMD [6,7] (ft)
	UNPROTECTED [2,3] (ft)	PROTECTED [4,5] (ft)	
≤ 100	600	80	30
150	600	90	34
200	600	100	37
300	600	113	42
500	600	130	49
700	600	141	53
1,000	600	153	57
1,500	600	166	62
2,000	600	176	66
3,000	600	191	72
5,000	600	211	79
7,000	600	224	84
10,000	603	239	90
15,000	691	258	97
20,000	760	272	102
30,000	870	292	110
50,000	1,032	321	120
70,000	1,154	341	128
100,000	1,300	364	136
150,000	1,488	391	147
200,000	1,637	412	155
300,000	1,800	444	166
500,000	1,800	487	183
700,000	1,800	518	194
1,000,000	1,800	552	207
1,500,000	1,800	594	223
2,000,000	1,800	626	235
3,000,000	1,800	673	252
5,000,000	1,800	737	276
7,000,000	1,800	782	293
10,000,000	1,800	832	312

Note for Table 12.21

1. Positive measures will be taken to prevent mixing of hydrogen or hydrazine's and adjacent oxidizers in the event of a leak or spill.
2. Distances are necessary to provide reasonable protection from fragments of tanks or equipment that are expected to be thrown in event of a vapor phase explosion.
3. W in lbs, Distance in ft

   $W \leq 10{,}000$ lbs: Unprotected Distance = 600 ft

   $10{,}000 < W \leq 265{,}000$ lbs: Unprotected Distance = $28 \times W^{1/3}$

   $W > 265{,}000$ lbs: Unprotected Distance = 1,800 ft

   603 ft ≤ Unprotected Distance < 1,798 ft: W = $(\text{Unprotected Distance}/28)^3$
4. The term "protected" means that protection from fragments is provided by terrain, effective barricades, nets, or other physical means.

5. Distances are based on the recommended IBD given in DoD 4500.9-R (Part II, Cargo), Defense Transportation Regulation, and extrapolation of the 2 cal/cm^2 data on the 1 percent water vapor curve. W in lbs, Distance in ft

W $\leq$ 100 lbs: Protected Distance = 80 ft
100 lbs <W:
Protected Distance = $-154.1 + 72.89 \times [\ln(W)] - 6.675 \times [\ln(W)]^2 + 0.369 \times [\ln(W)]^3$

80 ft $\leq$ Protected Distance:
$W = \exp[311.367 - 215.761 \times (\ln(\text{protected distance})) + 55.1828 \times (\ln(\text{protected distance}))^2 - 6.1099 \times (\ln(\text{protected distance}))^3 + 0.25343 \times (\ln(\text{protected distance}))^4]$

6. ILD/Aboveground IMD distances in this column apply for adjacent compatible (ELCG LB or LC) storage; for adjacent incompatible (other ELCG) storage, use IBD distances shown in previous columns. ECM may be used to their physical capacity for storing hydrogen provided they comply with the construction and siting requirements of Chapters 6 and 12, respectively for HD 1.1. ECM must be sited for a minimum of 100 lbs of HD 1.1 items using Tables 12.7 and 12.1.
7. Distances are 37.5 percent of "protected" column.
8. Extrapolations above 1,000,000 lbs extend well outside data included in Title 14, Code of Federal Regulations, Part 77, "Objects Affecting Navigable Airspace," current edition from which the original QD tables were derived; however, they are supported by independent calculations and knowledge of like phenomena.

Table 12.22. HD 1.1 QD for Military Aircraft Parking Areas.

NEWQD	Distance for Specific Targets Indicated in Table 12.1[1,2,3]	NEWQD	Distance for Specific Targets Indicated in Table 12.1[1,2,3]
50	111	7,000	574
70	124	10,000	646
100	139	15,000	740
150	159	20,000	814
200	175	30,000	932
300	201	50,000	1,105
500	238	70,000	1,236
700	266	100,000	1,392
1,000	300	150,000	1,594
1,500	343	200,000	1,754
2,000	378	300,000	2,008
3,000	433	500,000	2,381
5,000	513		

Notes for Table 12.22

1. D in ft, NEWQD in lbs
D = 30W1/3 with a minimum distance of 111 ft
NEWQD = D3/27,000 with a minimum NEWQD of 50 lbs
2. Minimum fragment distance requirements for HD 1.1 (see paragraph 12.22) do not apply to targets for which this table is used.

3. To protect against low-angle, high-speed fragments, barricades should be provided; however, these distances will not be reduced.

Table 12.23. HAS Separation Criteria to Prevent Simultaneous Detonation 1,2,3

FROM: / TO:		1st Generation HAS			2nd or 3rd Generation HAS			Korean TAB VEE [5] HAS			Korean Flow-Through	
		S	R	F	S	R	F	S	R	F	S	F/R
1st Generation HAS	S	K2	K2	K2.75	K2	K2	K2.75	K2	K2	K4.5	K2	K4.5
	R	K2	K2	K2.75	K2	K2	K2.75	K2	K2	K4.5	K2	K4.5
	F	K6	K4.5	K8	K6	K4.5	K9	K6	K4.5	K11	K6	K11
2nd or 3rd Generation HAS	S	K2	K2	K2.75	K2	K2	K2.75	K2	K2	K4.5	K2	K4.5
	R	K2	K2	K2.75	K2	K2	K2.75	K2	K2	K4.5	K2	K4.5
	F	K4.5	K2.75	K5	K4.5	K2.75	K6	K4.5	K2.75	K11	K4.5	K11
Korean TAB VEE [5] HAS	S	K2	K2	K2.75	K2	K2	K2.75	K2	K2	K4.5	K2	K4.5
	R	K2	K2	K2.75	K2	K2	K2.75	K2	K2	K4.5	K2	K4.5
	F	K6	K6	K11	K6	K6	K11	K6	K6	K11	K6	K11
Korean Flow-Through HAS	S	K2	K2	K2.75	K2	K2	K2.75	K2	K2	K4.5	K2	K4.5
	F/R	K6	K6	K11	K6	K6	K11	K6	K6	K11	K6	K11
HAS Ready Service ECM	S	K2	K2	K2.75	K2	K2	K2.75	K2	K2	K6	K2	K6
	R	K2	K2	K2.75	K2	K2	K2.75	K2	K2	K6	K2	K6
	FB	K2.75	K2.75	K5	K2.75	K2.75	K6	K2.75	K2.75	K6	K2.75	K6
	FU	K6	K4.5	K8	K6	K4.5	K9	K6	K4.5	K11	K6	K11
HAS Ready Service AGM	B	K2.75	K2.75	K6	K2.75	K2.75	K6	K6	K6	K6	K6	K6
	U	K11	K11	K11	K11	K11	K11	K11	K11	K11	K11	K11

Table 12.23A. HAS Separation Criteria to Prevent Simultaneous Detonation (continued) 1,2,3

TO:	FROM:	HAS Ready Service ECM				HAS Ready Service AGM	
		S	R	FB	FU	B	U
1st Generation HAS	S	K2 [4]	K2 [4]	K2.75	K2.75	K2.75	K2.75
	R	K2 [4]	K2 [4]	K2.75	K2.75	K2.75	K2.75
	F	K2 [4]	K2.75	K6	K9	K6	K9
2nd or 3rd Generation HAS	S	K2 [4]	K2 [4]	K2.75	K2.75	K2.75	K2.75
	R	K2 [4]	K2 [4]	K2.75	K2.75	K2.75	K2.75
	F	K2 [4]	K2 [4]	K2.75	K2.75	K2.75	K2.75
Korean TAB VEE [5] HAS	S	K2 [4]	K2 [4]	K2.75	K2.75	K2.75	K2.75
	R	K2 [4]	K2 [4]	K2.75	K2.75	K2.75	K2.75
	F	K6	K6	K6	K11	K6	K11
Korean Flow-Through HAS	S	K2 [4]	K2 [4]	K2.75	K2.75	K2.75	K2.75
	F/R	K6	K6	K6	K11	K6	K11
HAS Ready Service ECM	S	Use applicable ECM/AGM criteria in Table 12.1 for HAS Ready Service ECM/AGM					
	R						
	FB						
	FU						
HAS Ready Service AGM	B						
	U						

Notes for Table 12.23

1. Separations are based on First, Second, and Third Generation HAS doors remaining closed, except for aircraft towing, fueling, servicing, run up, or taxi, and during concurrent servicing operations or short periods when maintenance equipment or munitions are being moved into or out of shelters. If doors are left open for extended periods, apply default IMD to or from an open front. A HAS arch or rear wall may be considered as a barricade for application of K6. No reduction from K11 is allowed between "open door" HAS front to front exposures.

2. First Generation and Korean TAB VEE HAS are limited to a maximum NEWQD of 5,863 lbs. Second Generation, Third Generation, and Korean Flow-Through HAS are limited to a maximum NEWQD of 11,000 lbs. HAS Ready Service ECMs/AGMs are limited to a maximum NEWQD of 22,000 lbs.

3. HAS Pairs.

a. Flow-Through HAS Pairs are limited to a maximum NEWQD of 4,800 lbs in each HAS. For this NEWQD, IM protection is provided between each HAS in a HAS Pair. IM protection between a HAS Pair and adjacent HAS and HAS Ready Service ECM/AGM shall be in accordance with this table for the HAS designs involved.

b. HAS Pairs with rear walls or with front and rear walls are limited to a maximum NEWQD of 2,390 lbs in each HAS. For this NEWQD, IM protection is provided between each HAS in a HAS Pair. IM protection between a HAS Pair and adjacent HAS

and HAS Ready Service ECM/AGM shall be in accordance with this table for the HAS designs involved.

4. Use $d = 1.25W^{1/3}$ if the ECM loading density is $\leq$ 1.25 lbs/ft^3.

5. A Korean TAB VEE HAS which has been modified to incorporate the hardened front closure of the First Generation TAB VEE or TAB VEE Modified HAS may be treated as a First Generation HAS.

Table 12.24. HAS Separation Criteria for Asset Preservation 1,2,3

FROM: / TO:		1st Generation HAS			2nd or 3rd Generation HAS			Korean TAB VEE [4] HAS			Korean Flow-Through	
		S	R	F	S	R	F	S	R	F	S	F/R
1st Generation HAS	S	K9	K6	K9	K9	K6	K9	K9	K6	K11	K9	K11
	R	K8	K5	K8	K8	K5	K8	K8	K5	K11	K8	K11
	F	K18	K18	K18	K18	K18	K18	K18	K18	K24	K18	K24
2nd or 3rd Generation HAS	S	K9	K6	K9	K9	K6	K9	K9	K6	K11	K9	K11
	R	K8	K5	K8	K8	K5	K8	K8	K5	K11	K8	K11
	F	K11	K9	K18	K11	K9	K18	K11	K9	K18	K11	K18
Korean TAB VEE [4] HAS	S	K30	K24	K24	K30	K24	K24	K30	K24	K30	K30	K30
	R	K30	K24	K24	K30	K24	K24	K30	K24	K30	K30	K30
	F	K30	K24	K24	K30	K24	K24	K30	K24	K30	K30	K30
Korean Flow-Through HAS	S	K30	K24	K24	K30	K24	K24	K30	K24	K30	K30	K30
	F/R	K30	K24	K24	K30	K24	K24	K30	K24	K30	K30	K30
1st Generation Maintenance HAS [4]	S	K9	K8	K9	K9	K8	K9	K9	K8	K11	K9	K11
	R	K8	K8	K8	K8	K8	K8	K8	K8	K11	K8	K11
	F	K18	K18	K18	K18	K18	K18	K18	K18	K24	K18	K24
2nd or 3rd Generation Maintenance HAS [5]	S	K9	K8	K9	K9	K8	K9	K9	K8	K11	K9	K11
	R	K8	K8	K8	K8	K8	K8	K8	K8	K11	K8	K11
	F	K11	K9	K18	K11	K9	K18	K11	K9	K18	K11	K18

Table 12.24A. HAS Separation Criteria for Asset Preservation (continued) 1,2,3

TO:	FROM:	Ready Service ECM				Ready Service AGM		Storage Area ECM				Storage Area AGM	
		S	R	FB	FU	B	U	S	R	FB	FU	B	U
1st Generation HAS	S	K2.75	K2.75	K8	K8	K8	K8	K5	K5	K8	K8	K8	K8
	R	K2.75	K2.75	K8	K8	K8	K8	K5	K5	K8	K8	K8	K8
	F	K11	K9	K18	K18	K18	K18	K18	K18	K18	K18	K18	K18
2nd or 3rd Generation HAS	S	K2.75	K2.75	K8	K8	K8	K8	K5	K5	K8	K8	K8	K8
	R	K2.75	K2.75	K8	K8	K8	K8	K5	K5	K8	K8	K8	K8
	F	K2.75	K2.75	K8	K8	K8	K8	K5	K5	K8	K8	K8	K8
Korean TAB VEE HAS [4]	S	K30	K24	K30	K30	K30	K30	K30	K24	K30	K30	K30	K30
	R	K30	K24	K30	K30	K30	K30	K30	K24	K30	K30	K30	K30
	F	K30	K24	K30	K30	K30	K30	K30	K24	K30	K30	K30	K30
Korean Flow-Through HAS	S	K30	K24	K30	K30	K30	K30	K30	K24	K30	K30	K30	K30
	F/R	K30	K24	K30	K30	K30	K30	K30	K24	K30	K30	K30	K30
1st Generation Maintenance HAS [4]	S	K8	K8	K8	K8	K8	K8	K5	K5	K8	K8	K8	K8
	R	K8	K8	K8	K8	K8	K8	K5	K5	K8	K8	K8	K8
	F	K11	K9	K18	K18	K18	K18	K18	K18	K18	K18	K18	K18
2nd or 3rd Generation Maintenance HAS [5]	S	K8	K8	K8	K8	K8	K8	K5	K5	K8	K8	K8	K8
	R	K8	K8	K8	K8	K8	K8	K5	K5	K8	K8	K8	K8
	F	K8	K8	K8	K8	K8	K8	K5	K5	K8	K8	K8	K8

Notes for Table 12.24

1. Separations are based on First, Second, and Third Generation HAS doors remaining closed, except for aircraft towing, fueling, servicing, run up, or taxi, and during concurrent servicing operations or short periods when maintenance equipment or munitions are being moved into or out of shelters. If doors are left open for extended periods, apply Table 12.22 to or from an open front.

2. First Generation and Korean TAB VEE HAS are limited to a maximum NEWQD of 5,863 lbs. Second Generation, Third Generation, and Korean Flow-Through HAS are limited to a maximum NEWQD of 11,000 lbs. HAS Ready Service ECM used to support daily loading are limited to a maximum NEWQD of 22,000 lbs and a loading density of not more than 1.25 lbs/ft^3. HAS Ready Service AGM are limited to a maximum NEWQD of 22,000 lbs.

3. HAS Pairs. Asset preservation is not provided between each HAS in a HAS Pair. Flow-Through HAS Pairs are limited to a maximum NEWQD of 4,800 lbs in each HAS. HAS Pairs with rear walls or with front and rear walls are limited to a maximum NEWQD of 2,390 lbs in each HAS. Asset preservation distances between a HAS Pair and adjacent HAS and HAS Ready Service ECM/AGM shall be in accordance with this table for the HAS designs involved.

4. A Korean TAB VEE HAS which has been modified to incorporate the hardened front closure of the First Generation TAB VEE or TAB VEE Modified HAS may be treated as a First Generation HAS.

5. The distances reflect K30 equivalent protection (when doors are closed) for the aircraft. If this table is not applied for aircraft survivability, then ILD equivalent protection must be provided to personnel.

Table 12.25A. QD from a Third Generation HAS PES to an Unhardened ES. 1,2,3

NEWQD (lbs)	FRONT	SIDE	REAR
≤ 5 lbs [4, 5]	IBD, PTRD, ILD = 50 ft	IBD, PTRD, ILD = 50 ft	IBD, PTRD, ILD = 50 ft
5 < NEWQD ≤ 500 [4, 5]	IBD, PTRD, ILD = 230 ft	IBD, PTRD, ILD = 50 ft	IBD, PTRD, ILD = 50 ft
500 < NEWQD ≤ 1,100 [4, 5]	IBD, PTRD, ILD = 230 ft	IBD, PTRD, ILD = 394 ft	IBD, PTRD, ILD = 164 ft
1,100 < NEWQD ≤ 11,000 [6]	IBD = K50 PTRD = 50% IBD, 300 ft min ILD = 35% IBD, 300 ft min	IBD = K62 PTRD = 50% IBD, 394 ft min ILD = 35% IBD, 394 ft min	IBD = K40 PTRD = 50% IBD, 300 ft min ILD = 35% IBD, 300 ft min

Notes for Table 12.25A

1. This table may be applied from the front, sides and rear of a Second Generation HAS, and from the sides of a Korean Flow-Through HAS. Apply default QD criteria from the front and rear of a Korean Flow-Through HAS.
2. Separations are based on shelter doors remaining closed, except for aircraft towing, fueling, servicing, run up, or taxi, and during concurrent servicing operations or short periods when maintenance equipment or munitions are being moved into or out of shelters. If doors are left open for extended periods, normal combat aircraft parking area (per Tables 12.1, 12.2 and 12.3) apply from the front.
3. Separate AE from the HAS walls by a distance sufficient to prevent breaching. For less than 1,100 lbs NEWQD a 3 ft separation from the wall is sufficient.
4. The QD criteria apply to IBD, PTRD and ILD exposures for quantities ≤ 1,100 lbs NEWQD.
5. The 50 ft distance shown is not for QD purposes, but represents a minimum fire separation distance.
6. QD criterion applies to IBD, PTRD, and ILD exposures for quantities > 1,100 to 11,000 lbs NEWQD. Use 50% of the IBD criteria for PTRD exposures with a 300 ft minimum out the front and rear or a 394 ft minimum distance off the sides. Use 35% of the IBD criteria for intraline exposures with a 300 ft minimum distance out the front and rear or 394 ft minimum distance off the sides.

Table 12.25B. QD from a First Generation HAS PES to an Unhardened ES. 1,2,3

NEWQD (lbs)	FRONT	SIDE	REAR
≤ 2.63 lbs [4, 5]	IBD, PTRD, ILD = 50 ft	IBD, PTRD, ILD = 50 ft	IBD, PTRD, ILD = 50 ft
2.63 < NEWQD ≤ 263.8[4, 5]	IBD, PTRD, ILD = 230 ft	IBD, PTRD, ILD = 50 ft	IBD, PTRD, ILD = 50 ft
263.8 < NEWQD ≤ 586.3[4, 5]	IBD, PTRD, ILD = 230 ft	IBD, PTRD, ILD = 394 ft	IBD, PTRD, ILD = 164 ft
586.3 < NEWQD ≤ 5,863 [6]	IBD = K50 PTRD = 50% IBD, 300 ft min ILD = 35% IBD, 300 ft min	IBD = K62 PTRD = 50% IBD, 394 ft min ILD = 35% IBD, 394 ft min	IBD = K40 PTRD = 50% IBD, 300 ft min ILD = 35% IBD, 300 ft min

Notes for Table 12.25B

1. This table may be applied from the front, sides and rear of a First Generation HAS, and from the sides and rear of a Korean TAB VEE HAS. Apply default QD criteria from the front of a Korean TAB VEE HAS.
2. Separations are based on shelter doors remaining closed, except for aircraft towing, fueling, servicing, run up, or taxi, and during concurrent servicing operations or short periods when maintenance equipment or munitions are being moved into or out of shelters. If doors are left

open for extended periods, normal combat aircraft parking area (per Tables 12.1, 12.2 and 12.3) apply from the front.
3. Separate AE from the HAS walls by a distance sufficient to prevent breaching. For less than 1,100 lbs NEWQD a 3 ft separation from the wall is sufficient.
4. These QD criteria apply to IBD, PTRD and ILD exposures for quantities $\leq$ 586.3 lbs NEWQD.
5. The 50 ft distance shown is not for QD purposes, but represents a minimum fire separation distance.
6. QD criterion applies to IBD, PTRD, and ILD exposures for quantities > 586.3 to 5,863 lbs NEWQD. Use 50% of the IBD criteria for PTRD exposures with a 300 ft minimum out the front and rear or a 394 ft minimum distance off the sides. Use 35% of the IBD criteria for intraline exposures with a 300 ft minimum distance out the front and rear or 394 ft minimum distance off the sides.

Table 12.26A. Default Maximum Case Fragment Distances Versus Diameter for Intentional Detonations.

Diameter	Maximum Fragment Distance[1]		
	Robust[2]	Extremely Heavy Case[3]	Non-Robust[4]
(in)	(ft)	(ft)	(ft)
0.1	100	178	131
0.2	136	285	248
0.3	214	376	349
0.4	290	458	439
0.5	365	533	519
0.6	438	603	593
0.7	509	670	661
0.8	578	734	725
0.9	645	796	784
1.0	711	855	840
1.5	1,016	1,127	1,079
2.0	1,290	1,371	1,270
2.5	1,539	1,597	1,430
3.0	1,769	1,808	1,568
3.5	1,983	2,009	1,688
4.0	2,182	2,200	1,795
4.5	2,369	2,384	1,892
5.0	2,546	2,562	1,979

Table 12.26A. Default Maximum Case Fragment Distances Versus Diameter for Intentional Detonations (Continued).

Diameter	Maximum Fragment Distance[1]		
	Robust[2]	Extremely Heavy Case[3]	Non-Robust[4]
(in)	(ft)	(ft)	(ft)
5.5	2,713	2,734	2,058
6.0	2,872	2,901	2,131
6.5	3,024	3,064	2,198
7.0	3,169	3,223	2,261
7.5	3,307	3,378	2,319
8.0	3,440	3,530	2,373
8.5	3,568	3,679	2,424
9.0	3,691	3,825	2,472
9.5	3,810	3,969	2,517
10.0	3,924	4,110	2,559
10.5	4,035	4,249	2,599
11.0	4,142	4,386	2,637
11.5	4.246	4,521	2,674
12.0	4,347	4,654	2,708
12.5	4,444	4,786	2,741
13.0	4,539	4,916	2,772
13.5	4,631	5,044	2,802
14.0	4,721	5,170	2,830

Table 12.26A. Default Maximum Case Fragment Distances Versus Diameter for Intentional Detonations (Continued).

Diameter	Maximum Fragment Distance[1]		
	Robust[2]	Extremely Heavy Case[3]	Non-Robust[4]
(in)	(ft)	(ft)	(ft)
14.5	4,808	5,296	2,857
15.0	4,893	5,419	2,883
16.0	5,057	5,663	2,933
18.0	5,362	6,137	3,020
20.0	5,640*	6,594*	3,095*
22.0	5,896*	7,037*	3,160*
24.0	6,133*	7,467*	3,217*
26.0	6,353*	7,886*	3,268*
28.0	6,558*	8,295*	3,312*
30.0	6,750*	8,695*	3,352*
35.0	7,182*	9,659*	3,435*
40.0	7,557*	10,580*	3,499*
45.0	7,887*	11,465*	3,549*
50.0	8,180*	12,319*	3,588*
55.0	8,443*	13,146*	3,619*
60.0	8,680*	13,950*	3,644*

*** Extrapolated**

Notes for Table 12.26A

1. These calculated fragment throw distances are for individual munitions and do not apply to stacks. They also do not address "rogue" (non-case) fragments that can be produced from sections of nose plugs, base plates, boattails, or lugs. Rogue fragments can travel to significantly greater distances (i.e., >10,000 ft) than those shown. Care must be taken to properly orient the munition or take other measures to minimize rogue fragment hazards.

2. Robust munitions are defined in the glossary.

Maximum Fragment Distance (MFD) in ft, Diameter (D) in inches; ln is natural logarithm.

$$MFD = 711 * D^{(0.91 - 0.073 * \ln(D))}$$

$$D = \exp[6.233 - \{128.804 - 13.699 * \ln(MFD)\}^{1/2}]$$

3. Extremely Heavy case Munitions are defined in the glossary.

Maximum Fragment Distance (MFD) in ft, Diameter (D) in inches; ln is natural logarithm.

$$MFD = 854.8 * D^{0.682}$$

$$D = (5.0243E\text{-}05) * MFD^{1.4663}$$

4. Non-Robust munitions are defined in the glossary.

Maximum Fragment Distance (MFD) in ft, Diameter (D) in inches; ln is natural logarithm.

$$MFD = 840 * D^{(0.645 - 0.07 * \ln(D))}$$

$$D = \exp[4.607 - \{117.417 - 14.286 * \ln(MFD)\}^{1/2}]$$

5. Use of equations given in notes (2), (3), and (4) to determine other Diameter/MFD combinations is allowed.

6. See subparagraph 12.74.3.2.2.2. for ranges associated with multiple munitions detonation.

Table 12.26B. Default Maximum Case Fragment Distances Versus Net Explosive Weight for Intentional Detonations.

Net Explosive Weight (lbs)	Maximum Fragment Distance[1]		
	Robust[2] (ft)	Extremely Heavy Case[3] (ft)	Non-Robust[4] (ft)
0.01	587	150	678
0.015	747	379	756
0.02	861	542	811
0.03	1,021	772	889
0.04	1,134	934	944
0.05	1,222	1,061	987
0.06	1,294	1,164	1,022
0.07	1,355	1,251	1,051
0.08	1,408	1,327	1,077
0.09	1,454	1,393	1,099
0.1	1,496	1,453	1,120
0.15	1,656	1,682	1,197
0.2	1,769	1,845	1,253
0.3	1,929	2,075	1,330
0.4	2,043	2,237	1,386
0.5	2,131	2,364	1,428
0.6	2,202	2,467	1,463
0.7	2,263	2,554	1,493

Table 12.26B. Default Maximum Case Fragment Distances Versus Net Explosive Weight for Intentional Detonations (Continued).

Net Explosive Weight (lbs)	Maximum Fragment Distance[1]		
	Robust[2] (ft)	Extremely Heavy Case[3] (ft)	Non-Robust[4] (ft)
0.8	2,316	2,630	1,519
0.9	2,362	2,696	1,541
1.0	2,404	2,756	1,561
1.5	2,564	2,985	1,639
2	2,677	3,148	1,694
3	2,837	3,378	1,772
4	2,951	3,541	1,827
5	3,039	3,667	1,870
6	3,111	3,770	1,905
7	3,172	3,857	1,935
8	3,224	3,933	1,960
9	3,271	3,999	1,983
10	3,312	4,059	2,003
15	3,472	4,288	2,081
20	3,586	4,451	2,136
30	3,746	4,681	2,214
50	3,947	4,970	2,312
70	4,080	5,160	2,376

Table 12.26B. Default Maximum Case Fragment Distances Versus Net Explosive Weight for Intentional Detonations (Continued).

Net Explosive Weight (lbs)	Maximum Fragment Distance[1]		
	Robust[2] (ft)	Extremely Heavy Case[3] (ft)	Non-Robust[4] (ft)
100	4,221	5,362	2,445
150	4,381	5,592	2,522
200	4,494	5,754	2,578
300	4,654	5,984	2,655
500	4,856	6,273	2,753
700	4,988	6,463	2,818
1,000	5,129	6,665	2,886
1,500	5,289*	6,895*	2,964*
2,000	5,403*	7,057*	3,019*
3,000	5,563*	7,287*	3,097*
5,000	5,764*	7,576*	3,195*
7,000	5,897*	7,766*	3,259*
10,000	6,037*	7,968*	3,328*
15,000	6,197*	8,198*	3,406*
20,000	6,311*	8,360*	3,461*

*** Extrapolated**

Notes for Table 12.26B

1. These calculated fragment throw distances are for individual munitions and do not apply to stacks. They also do not address “rogue” (non-case) fragments that can be produced from sections of nose plugs, base plates, boattails, or lugs. Rogue fragments can travel to significantly

greater distances (i.e., >10,000 ft) than those shown. Care must be taken to properly orient the munition or take other measures to minimize rogue fragment hazards.

2. Robust munitions are defined in the glossary.

Maximum Fragment Distance (MFD) in ft, Net Explosive Weight (W) in pounds; ln is natural logarithm.

MFD = 2404 + 394.5 * ln (W)
W = exp[(MFD – 2404) /394.5]

3. Extremely Heavy Case Munitions are defined in the glossary.

Maximum Fragment Distance (MFD) in ft, Net Explosive Weight (W) in pounds; ln is natural logarithm.

MFD = 2756 + 565.9 * ln (W)
W = exp[(MFD – 2756) / 565.9]

4. Non-Robust munitions are defined in the glossary.

Maximum Fragment Distance (MFD) in ft, Net Explosive Weight (W) in pounds; ln is natural logarithm.

MFD = 1561.3 + 191.8 * ln (W) (100 ft minimum)
W = exp[(MFD – 1561.3) / 191.8]

5. Use of equations given in notes (2), (3), and (4) to determine other W/MFD combinations is allowed.

6. See subparagraph 12.74.3.2.2.2. for ranges associated with multiple munitions detonation.

Table 12.27. Minuteman TNT Equivalencies.

Stage	HD	NEW	TNT Factor	TNT Equivalency
I (F&G)	1.3	45,800	NA	NA
I (F&G)	1.3	45,800	.035	1600(1)
II (F&G)	1.3	13,680	NA	NA
II (F&G)	1.3	13,680	.152	2100(1)
III (F)	1.1	3671	1.01	3700(1)
III (G)	1.3	7281	NA	NA
III (G)	1.3	7281	.506	3700(1)

NOTE: These equivalencies apply to LGM 30 Minuteman motors, whether assembled into a set or stored/handled separately, when an HD 1.1 initiator is present.

Table 12.28. Peacekeeper TNT Equivalencies.

Stage	HD	NEW	TNT Factor	TNT Equivalency
I	1.3	99,133	NA	NA
I	1.3	99,133	1.20	118960(1)
II	1.3	54,120	NA	NA
II	1.3	54,120	1.20	64,944(1)
III	1.1	15,606	1.25	19,508(1)

NOTE: These equivalencies apply to Peacekeeper motors, whether assembled into a set or stored/handled separately, when a HD 1.1 initiator is present. When stage III's are stored only with other stage III's, the HD 1.1 NEWQD versus TNT equivalency may be used.

Table 12.29. Criteria for Non-DoD Explosives Activities on DoD Installations.

TO / FROM	Non-DoD Storage	DoD/Joint Storage	Non-DoD Operations	DoD Operations	Shared Launch Facilities	DoD Non-Explosives Facilities/Operations Non Related
Non-DoD Storage	Check for IMD	IMD	Check for IMD	IBD	IBD	IBD
Non-DoD Operations	Check for IMD	IBD	Check for IMD	IBD	IBD	IBD
Shared Launch Facilities	IBD	IBD	IBD	IBD	ILD	IBD
DoD/Joint Storage	IMD	IMD	IBD	ILD	IBD	IBD
DoD Operations	IBD	ILD	IBD	ILD	IBD	IBD

Table 12.30. QD for HD 1.1 AE For K = 1.1, 1.25, 2, 2.75, 4.5, and 5.

NEWQD (lbs)	Hazard Factor, K					
	1.1 ($ft/lb^{1/3}$)	1.25 ($ft/lb^{1/3}$)	2 ($ft/lb^{1/3}$)	2.75 ($ft/lb^{1/3}$)	4.5 ($ft/lb^{1/3}$)	5 ($ft/lb^{1/3}$)
100	7.0	7.0	9.3	13	21	23
150	7.0	7.0	11	15	24	27
200	7.0	7.3	12	16	26	29
300	7.4	8.4	13	18	30	33
500	8.7	9.9	16	22	36	40
700	9.8	11	18	24	40	44
1,000	11	13	20	27	45	50
1,500	13	14	23	31	52	57
2,000	14	16	25	35	57	63
3,000	16	18	29	40	65	72
5,000	19	21	34	47	77	85
7,000	21	24	38	53	86	96
10,000	24	27	43	59	97	108
15,000	27	31	49	68	111	123
20,000	30	34	54	75	122	136
30,000	34	39	62	85	140	155
50,000	41	46	74	101	166	184
70,000	45	52	82	113	185	206
100,000	51	58	93	128	209	232
150,000	58	66	106	146	239	266
200,000	64	73	117	161	263	292
300,000	74	84	134	184	301	335
500,000	87	99	159	218	357	397
700,000	98	111	178	244	400	444
1,000,000	110	125	200	275	450	500

Table 12.31. QD for HD 1.1 AE For K = 6, 8, 9, 11, 18, 40.

NEWQD (lbs)	Hazard Factor, K					
	6 ($ft/lb^{1/3}$)	8 ($ft/lb^{1/3}$)	9 ($ft/lb^{1/3}$)	11 ($ft/lb^{1/3}$)	18 ($ft/lb^{1/3}$)	40 ($ft/lb^{1/3}$)
100	28	37	42	51	84	186
150	32	43	48	58	96	213
200	35	47	53	64	105	234
300	40	54	60	74	120	268
500	48	63	71	87	143	317
700	53	71	80	98	160	355
1,000	60	80	90	110	180	400
1,500	69	92	103	126	206	458
2,000	76	101	113	139	227	504
3,000	87	115	130	159	260	577
5,000	103	137	154	188	308	684
7,000	115	153	172	210	344	765
10,000	129	172	194	237	388	862
15,000	148	197	222	271	444	986
20,000	163	217	244	299	489	1,086
30,000	186	249	280	342	559	1,243
50,000	221	295	332	405	663	1,474
70,000	247	330	371	453	742	1,649
100,000	278	371	418	511	835	1,857
150,000	319	425	478	584	956	2,125
200,000	351	468	526	643	1,053	2,339
300,000	402	536	602	736	1,205	2,678
500,000	476	635	714	873	1,429	3,175
700,000	533	710	799	977	1,598	3,552
1,000,000	600	800	900	1,100	1,800	4,000

Chapter 13

CONTINGENCIES, COMBAT OPERATIONS, MILITARY OPERATIONS

Section 13A—Introduction

13.1. Introduction. Per Joint Publication 1-02, contingencies are emergencies involving military forces caused by natural disasters, terrorists, subversives, or by required military operations. Due to the uncertainty of the situation, contingencies require plans, rapid response, and special procedures to ensure the safety and readiness of personnel, installations, and equipment. This chapter provides the optional criteria for contingencies, combat operations, military operations other than war (MOOTW), and associated training. Full compliance with other chapters of this Manual may not be possible during such operations. In situations involving combined or joint operations, the Commander of Unified or Specified Command (Combatant Commander) or the US Commander of a Joint Task Force (JTF) will designate the Service explosives safety criteria to be used.

13.2. Scope. The provisions of this chapter only apply to:

13.2.1. Those Air Force AE activities located outside the United States.

13.2.2. Combatant Commanders, United States Commanders of JTF or Air Force Commanders in the management of these Air Force AE activities. When necessary, commanders may delegate certain explosive safety responsibilities to designated subordinate commanders to ensure appropriate controls.

13.2.3. Contingency, combat, and MOOTW training, regardless of location, when specifically authorized by applicable Air Force headquarters or Unified Command Commander. Prior to approval of this training, a risk analysis that thoroughly assesses asset preservation and identifies the risk associated with the training will be conducted. QD separations provided for asset preservation will be used for training, except where Chapter 12 permits lesser distances to be used.

13.3. Contingencies, Combat Operations, MOOTW, and Associated Training. Contingency, combat operations and MOOTW refer to operations that a unit actually conducts during or leading up to a contingency, combat, or MOOTW situation. These operations may actually occur as previously defined by the operational plan, may be modified from the operational plan, or may be newly defined if an operational plan did not exist prior to the contingency, combat, or MOOTW situation. Associated training refers to training occurring in the immediate support of an impending or on-going contingency, combat, or MOOTW situation (e.g., UTC training in support of AEF rotation or tasking); routine training falls under day-to-day operations per paragraph 1.2.1.6.1.

13.4. Asset Preservation and Minimum Separation Distances. This chapter provides optional criteria and risk management tools not available elsewhere in this Manual. These optional criteria provide greater protection (asset preservation distance) for assets deemed sufficiently critical to warrant the greater protection, and, in some circumstances, provide lesser protection (minimum separation distance) for those assets for which the mission requirements

outweigh the increased risk to those assets. See chapter 12 for paired relationships not covered in this section.

13.4.1. **Asset preservation distance.** At this distance from the PES, assets at the ES are expected to be usable and mission capability is maintained following an incident. This separation distance should prevent propagation between PES. (See DoD 6055.09-M, *DoD Ammunition and Explosives Safety Standards*, for expected consequences for these separation distances.)

13.4.2. **Minimum separation distance.** At this distance from the PES, mission capability will likely be impaired or delayed. This separation distance should prevent prompt propagation; however, late time propagation between PES is possible. (See DoD 6055.09-M, *DoD Ammunition and Explosives Safety Standards*, for expected consequences for these separation distances.)

Section 13B—Planning for Deployments

13.5. Planning for Deployments.

13.5.1. The requirements of this Manual also apply to contingencies, peacetime deployments, and exercises where explosives are involved. At no time is the observance of explosives safety practices more important than when deploying or employing combat forces. Explosives safety is an integral part of combat survivability.

13.5.2. Pay careful attention during planning to ensure compliance with explosives QD rules as discussed in Annex FF of the Air Force War Mobilization Plan Vol. 1 (WMP1).

13.5.3. MAJCOMs which have units that deploy or support deployed forces will require these units to develop procedures and explosives site plans for parking explosives-loaded aircraft, as well as receipt, storage, buildup, and delivery of munitions. Explosives safety considerations must be an integral part of the site survey team's visit and subsequent plans for on-going support and oversight. These procedures and explosives site plans are developed jointly by operations, civil engineering, logistics, and safety from both augmented and augmenting MAJCOMs and units. MAJCOMs will make these procedures and explosives site plans available to deploying units.

13.5.4. Planning for possible deployments includes:

13.5.4.1. A review of waivers and exemptions that may impact deployment plans, such as those in Attachment 4.

13.5.4.2. Periodic updates as munitions commitments and bed-down locations change. Include civil engineering concept plans for constructing required aircraft revetments or protective shelters and munitions storage facilities. For units with a munitions mission but no specific deployment location, site preplanning must be adaptable to any deployment location.

13.5.4.3. Locally written instructions (see Section 7B) for all phases of munitions operations at the deployed location.

13.5.4.4. Briefings to tasked unit personnel on the plans and procedures to be used at the deployment location.

13.5.5. MAJCOMs must ensure adequate explosives safety support is available at the deployment location during planning and bed-down.

13.5.5. **(ACC)** Weapons safety personnel must be part of the initial site survey for operations/exercise plan tasks.

13.5.6. The QD priority to maintain during planning and employment of combat forces is: (1) maintaining intermagazine (IM) separation, (2) meeting intraline (IL) separation, and (3) protecting unrelated personnel.

13.5.7. See Chapter 14 and Section 13D for explosives site planning requirements. (See Air Force Pamphlet 91-216, *USAF Safety Deployment and Contingency Pamphlet*.)

Section 13C—Risk Management

13.6. Risk Management. Consistent with operational requirements, it is Air Force policy to manage risks associated with AE (see paragraph 1.1). Exceptions to this chapter's criteria are allowed only where equivalent protection is provided, or where risk assessment and risk management control is performed.

13.6.1. **Equivalent Protection.** Situations where an analysis determines that protective construction or other specialized safety features provide a level of protection equivalent to the separation distances required by this Manual.

13.6.2. **Risk Assessment.** Situations where an assessment determines that an acceptable level of safety is provided. Risk assessment (see Chapter 4) is a systematic procedure consisting of the following four steps:

13.6.2.1. An event analysis to identify and describe possible events such as the location, type of occurrence, probability of occurrence, and quantity of explosives.

13.6.2.2. An effects analysis of the effects of the possible events to persons in the surroundings such as blast pressure, fragmentation, and thermal hazards.

13.6.2.3. An exposure analysis of the places, protection and time history of exposed personnel in the hazardous areas.

13.6.2.4. A risk calculation.

13.6.3. **Risk Management Control.** The action a commander takes to minimize acceptable risk. Such actions will include:

13.6.3.1. Development, implementation, and enforcement of applicable control measures used to eliminate the hazard or reduce its risk.

13.6.3.2. Continuous evaluation of the effectiveness of the implemented control measures.

Section 13D—Explosives Site Planning

13.7. Site Approval. All explosives locations falling within the scope of this chapter will be approved by the applicable commander or by the DDESB per paragraph 13.8. Site approval documentation will be submitted:

13.7.1. For AE locations such as the following:

13.7.1.1. Storage locations.

13.7.1.2. Holding areas (e.g., basic load ammunition holding areas (BLAHA), flight line holding areas, port and railhead holding areas, and marshalling areas, etc.).

13.7.1.3. Handling and operating locations (e.g., HAS, ports, AE maintenance, repair, and renovation areas and sling out areas, etc.).

13.7.1.4. Forward arming and refueling points (FARP).

13.7.1.5. Combat aircraft parking area (CAPA) and cargo aircraft parking areas.

13.7.1.6. Static missile batteries.

13.7.1.7. Locations used for the treatment or disposal (e.g., open burn or open detonation) of munitions. Exceptions are those locations used in an emergency response, for burning excess propellant resulting from munitions use during training, and those involved in direct combat operations.

13.7.2. For non-AE exposed sites within quantity-distance (QD) arcs.

13.8. Site Approval and Documentation Requirements. The operational situation and the type and duration of the AE operations conducted at the site or facility determine the type of documentation required for a site approval and the approval level. The following categories of operations apply:

13.8.1. **Permanent.**

13.8.1.1. **Definition.** Those AE related facilities where operations are expected to continue for more than 12 months.

13.8.1.2. **Documentation and Approval Requirements.** A DDESB approved explosives site plan for such locations must be obtained once the Combatant Commander (or Air Force headquarters where applicable) determines operations will require the facilities' use to exceed 12 months. Explosives site plans with waivers or exemptions will be processed in accordance with the "day-to-day operations" requirements of Section 1B.

13.8.2. Recurrent.

13.8.2.1. **Definition.** Those AE related facilities where operations are expected to occur on a periodic basis regardless of the duration of the operation. These locations may be sited using compensatory actions, such as facility evacuation or change-of-use, to minimize the risks associated with AE operations.

13.8.2.2. **Documentation and Approval Requirements.** These locations must have a DDESB (or appropriate level of command when applicable) approved explosives site plan before commencing operations. Explosives site plans with waivers or exemptions will be processed in accordance with the "day-to-day operations" requirements of Section 1B.

13.8.3. Temporary.

13.8.3.1. **Definition.** Those AE related facilities where operations are not expected to continue for more than 12 months and are not recurrent, or for which advanced planning and approval are impractical.

13.8.3.2. **Documentation and Approval Requirements.** A plan for the specific scenario will be approved by the applicable commander. The plan will detail the following:

13.8.3.2.1. **A risk assessment for the proposed operation.** This assessment will weigh the need for the facility against the potential effects of a mishap (e.g., mission impact, loss of resources, turnaround times, etc.).

13.8.3.2.2. Schedule for the cessation of explosives operations or submittal of an explosives site plan per paragraph 13.8.1 if the operations exceed 12 months.

13.8.4. Contingency, Combat, and MOOTW Training.

13.8.4.1. **Definition.** Those operations that simulate real world combat environments using live AE to achieve training goals and occur in the immediate support of an impending or on-going contingency, combat, or MOOTW situation.

13.8.4.2. **Documentation and Approval Requirements.** Facilities or areas for training activities will have a DDESB approved explosives site plan for permanent or recurrent operations, or a risk analysis approved by the applicable commander for temporary operations. For permanent or recurrent operations, explosives site plans with waivers or exemptions will be processed in accordance with the "day-to-day operations" requirements of Section 1B.

13.9. Explosives Site Plan Packages. See Chapter 14 for explosives site plan requirements with the following changes:

13.9.1. In the absence of suitable maps or drawings, information (e.g., sketches, photographs, or other information) may be provided.

13.9.2. An explanation of any deviations from pertinent safety standard caused by local conditions.

13.9.3. A copy of the risk analysis performed, if one was performed, to demonstrate equivalent protection.

13.10. Approval Authority for Exceptions. The Combatant Commander, United States Commander of a JTF or Air Force Component Commander, for strategic or other compelling reasons may authorize exceptions to the explosives safety standards herein for the planning or conduct of temporary contingencies, combat operations and MOOTW. All exceptions will be coordinated with the host nation, as required, and consistent with international agreements.

13.10.1. Requests for exceptions to QD criteria will be per Air Force directives. When joint operations are being conducted from a single base or location, exceptions that affect another Service must be coordinated with that Service.

13.10.2. Requests for exceptions to QD criteria will contain the following:

13.10.2.1. A risk analysis for the proposed operation weighing the need to conduct the operation and violate the standards against the potential effect of a mishap (e.g., mission impact, loss of resources, turnaround times, etc.).

13.10.2.2. A timeline listing milestones which will eliminate the need for the exception.

13.10.3. For planned construction, in support of temporary contingency, combat operations or MOOTW, not meeting QD criteria, obtain Combatant Commander, United States Commander of JTF, or Air Force Component Commander approval.

Section 13E—QD Criteria for Contingencies, Combat Operations, MOOTW and Associated Training

13.11. Basic Load Ammunition Holding Area (BLAHA).

13.11.1. **General.** To fulfill their missions, certain units must keep their basic load ammunition in armored vehicles, trucks, trailers, structures, or on pads. This involves acceptance of greater risks to unit personnel, facilities, and equipment than permitted by other chapters of this Standard. The concept of BLAHA storage may also be used to provide QD separations during mobile operations. A Basic Load Storage Area (BLSA) is a location containing multiple BLAHA.

13.11.2. **Mixing of Basic Load Ammunition.** Storage compatibility requirements of Chapter 7 do not apply to BLAHA facilities.

13.11.2.1. NEWQD for use with BLAHA QD criteria will be determined as follows:

13.11.2.1.1. The sum of the weights of all energetic compositions contained in munitions hazard classified as HD 1.1 or 1.5 will be used.

13.11.2.1.2. The sum of the explosive weight of all HD 1.2 AE will be used. The propellant weight of a HD 1.2 item (if present) may be disregarded.

13.11.2.1.3. The weights of energetic compositions hazard classified as HD 1.3 may be disregarded. However, if the site only contains HD 1.3 items, the criteria contained in paragraph 12.28 apply.

13.11.2.1.4. The weights of energetic compositions classified as HD 1.4 may be disregarded.

13.11.2.1.5. The explosive weight of HD 1.6 will be computed as follows:

13.11.2.1.5.1. When HD 1.6 is stored alone or with HD 1.4 AE, the QD criteria of paragraphs 12.29. and 12.30. apply.

13.11.2.1.5.2. When HD 1.6 is stored with AE classified as HD 1.1, HD 1.2 or HD 1.5, add the explosives weight of the HD 1.6 items into the NEWQD calculations.

13.11.2.1.5.3. When HD 1.6 is stored with AE classified as HD 1.3 add the explosives weights of HD 1.3 and HD 1.6. The QD criteria in paragraph 12.28 apply.

13.11.2.2. Explosives Limits.

13.11.2.2.1. The maximum NEWQD at any BLAHA in a BLSA storing mixed compatibility must not exceed 8,818 lbs. A BLSA may have multiple 8,818-lb BLAHA, provided the BLAHA are separated from each other by the applicable distances (D1, D2 and D3) given in Table 13.1.

13.11.2.2.2. When the NEWQD of a BLSA or a BLAHA exceeds 8,818 lb, the QD computations and HD mixing rules for the site will be per Chapter 12 and the explosives compatibility storage criteria will be per Chapter 7.

13.11.3. QD Computations.

13.11.3.1. The total NEWQD of AE in each site will be used for computation of QD provided the required distances (Table 13.1) necessary to prevent propagation separate these sites. If the separation distances are not met, the entire BLSA will be considered one site and paragraph 13.11.2.2.2 applies.

13.11.3.2. The IMD requirements of Chapter 12 apply when using 3-bar or 7-bar ECM.

13.11.3.3. Table 13.1 contains the QD separation for BLAHA and BLSA.

13.11.3.4. Heavy armored vehicles are expected to contain most of the blast and fragments from an internal explosion and are well protected from an external explosion. For this reason there is no required separation from heavy armor PES to light or non-armored ES. Additionally, heavy armor ES require no separation from other sites. The hatches of heavy armored vehicles must be kept closed to be considered as heavy armor vehicles; otherwise, they are considered as light armor vehicles. Use Table 13.2 to determine the applicable QD for heavy, light and non- armored vehicles.

13.12. Ports. The following required separation criteria will apply to ports where DoD AE are loaded or un-loaded.

13.12.1. **Explosives Piers.**

13.12.1.1. AGM IMD (K11) will be maintained between explosives piers.

13.12.1.2. ILD (K18) will be maintained from an explosives pier to a non-explosives pier used for the handling of military cargo.

13.12.1.3. AGM IMD (K11) will be maintained to AE holding areas (HA) based on the NEWQD at the pier.

13.12.1.4. Marshalling Yards will be located at PTRD from explosives piers.

13.12.1.5. Railheads used for long-term storage or as a transfer depot will be sited at AGM IMD (K11) from an explosives pier based on the NEWQD at the pier.

13.12.2. Explosives Anchorages. The criteria of DoD 6055.09-M, Volume 4, *DoD Ammunition and Explosives Safety Standards*, apply with the following exceptions:

13.12.2.1. ILD (K18) will be provided between the explosives loading or unloading section of the anchorage and the loaded ship section of the explosives anchorage.

13.12.2.2. An explosives anchorage will be located at K40 from all piers. However, where necessary for security or navigational reasons, this distance may be reduced to ILD (K18) when the piers are only used for DoD operations. PTRD may be applied for asset

preservation. A separation distance of K40 will be maintained to all non-DoD related piers.

13.12.2.3. ILD (K18) is permitted between an explosives anchorage and a non-explosives DoD related anchorage. K40 will be maintained between an explosives anchorage and a non-explosives, non-DoD related anchorage.

13.12.3. Explosives Facilities.

13.12.3.1. **AE HA.** These HA are used in support of AE loading and un-loading of ships. Typically, AE being held at these locations are only present for a short time. The NEWQD associated with the AE HA is based on all AE present at the site. The following apply to AE HA:

13.12.3.1.1. ILD (K18) will be maintained to both explosives and non-explosives piers based on the NEWQD present at the AE HA.

13.12.3.1.2. PTRD will be maintained to an explosives or non-explosives Marshalling Yard.

13.12.3.1.3. Railheads used for AE HA storage or as a transfer depot will be sited at AGM IMD (K11) from an AE HA based on the NEWQD at the AE HA.

13.12.3.2. Marshalling Yards. PTRD will be maintained between marshalling yards and explosives piers or AE HA. The location of the marshalling yard will typically be governed by the NEWQD at the other PES. When operational necessity dictates, marshalling yards may be separated by ILD (K18) to any nearby manned explosives operations and AGM IMD (K11) to any nearby unmanned explosives storage operations.

13.12.3.3. **Loading Docks.** Loading docks will be sited at IMD (K11) from all ES.

13.12.3.4. **Classification Yards.** Use criteria provided in paragraph 12.61.

13.12.3.5. **Railheads.** Based on its use, a railhead will be sited as a classification yard, AE HA or a loading dock.

13.13. Field Storage and Handling Areas. These areas will be sited per Table 13.3. Use separation distances from the applicable QD tables in Chapter 12 for the HD and NEWQD of the AE involved with the PES. AE will be segregated per Chapter 7 by storage CG. The clear zone surrounding the field storage and handling areas is bounded by the applicable IBD. No unrelated, occupied structures are permitted within this zone.

13.13.1. These areas may consist of all or some of the following explosives locations:

13.13.1.1. **Field Storage .** These sections are used to store AE. The reason for using field storage sections is to disperse the AE in multiple, widely separated storage sections to prevent the loss of any one section from causing the loss of other sections thereby seriously degrading the mission. AE may be stored in existing structures per Chapter 12, and caves or tunnels as prescribed in DoD 6055.09-M, *DoD Ammunition and Explosives Safety Standards*. The construction and use of barricades and revetments will be per Chapter 6.

13.13.1.2. **AE Staging Area.** These areas are normally used as an HA for outgoing AE and for ready access to combat aircraft loading areas (CALA).

13.13.1.3. **Captured Enemy Ammunition Area.** A separate area will be provided for the storage of captured enemy AE. Captured enemy AE that cannot be identified will be treated as HD 1.1.

13.13.1.4. **AE Operations Area.** An area used for operations such as minor maintenance and repair of AE or their containers, surveillance, segregation, or weapons assembly.

13.13.1.5. **AE Destruction Area.** An area used for the destruction of AE. It may consist of a burning area, a demolition area, or both.

13.13.1.6. **Sling-out Area.** An area used for the movement of AE by rotary wing aircraft.

13.13.2. These areas may consist of all or some of the following non-explosives locations:

13.13.2.1. **Administration and Billeting Areas.** Inhabited locations not directly related to the daily operations of the field storage and handling areas.

13.13.2.2. **Manned Support Facilities.** Facilities that directly support AE operations (e.g., field offices and AE support equipment maintenance facilities).

13.13.2.3. **Unmanned Support Facilities.** Unmanned locations that support AE operations (e.g., forklift charging stations, dunnage storage, and buildings that store inert materials). A minimum 50 ft separation distance will be maintained from these locations to any PES.

13.13.3. **Modular Storage.** A barricaded area comprised of a series of connected cells with hard surface storage pads separated from each other by barricades (see Section 6D).

13.13.4. **Commercial Intermodal Containers (CIC).** Containers used for transporting AE may be used for AE storage and will be sited as AGM.

13.14. Forward Arming and Refueling Point (FARP). The storage of AE and fuel at the same location is inherently hazardous and shall be avoided when possible. If it is necessary to refuel and rearm aircraft at the same location, all precautions must be made to minimize the hazards involved in these operations. Armament pads will contain the minimum amount of AE to conduct efficient operations. For example, where armament pads support only one aircraft, that pad will be restricted to the amount of ammunition necessary to rearm that aircraft. The following required separation criteria apply:

13.14.1. Use K24 for asset preservation between FARP and other ES.

13.14.2. FARPs will be separated by IBD from all non-associated inhabited buildings.

13.14.3. AE ready storage (i.e., AE staged to support the next load) will be separated by AGM IMD from the armament pads with only armament pads considered as the PES. Ready AE storage structures and locations will be separated from other ready AE storage structures and locations by AGM IMD.

13.14.4. Build-up locations will be separated by AGM IMD from all other explosives storage and operations with only the build-up locations considered as the PES.

13.14.5. Distances prescribed by the owning service will separate other support structures and sites.

13.14.6. AE will be separated from operational fuel supplies by at least 100 ft. Fuel supplies will be diked or placed downhill from AE.

13.15. Airfield Operations. Special consideration must be given to phased plans where the peacetime operation and positioning of aircraft transitions to contingency operations with increased quantities and use of AE. Exposures given adequate protection under the peacetime phase may be at greater risk during the contingency phase. Commanders must consider these changes when approving these plans. The proper use of such features as barricades or earth-filled, steel-bin-type barricades (ARMCO revetment or equivalent per Section 6E) can decrease the magnitude of a potential event and increase the explosives capacity of limited areas.

13.15.1. Airfield QD Criteria for PES. Table 13.4 provides criteria for airfield PES.

13.15.2. Airfield QD Criteria for ES.

13.15.2.1. Runways, Taxiways and Aircraft.

13.15.2.1.1. For military use only, use Table 13.4.

13.15.2.1.2. For joint use, use criteria in Tables 12.1, 12.2 and 12.3.

13.15.2.2. Combat Aircraft Support Facilities.

13.15.2.2.1. Unhardened combat aircraft support facilities will be separated from AE storage and operating facilities by K30 for HD 1.1 and PTRD for all other HDs. For asset preservation, apply IBD with no minimum fragment distance based on the NEWQD for HD 1.1; apply IBD for all other HDs.

13.15.2.2.2. If these functions are located in a HAS, separation may be reduced to K18 to the sides or rear of the HAS.

13.15.2.2.3. Other hardened facility sitings require DDESB approval.

13.15.2.2.4. When operational necessity dictates, separation distances less than K18 may be approved for ES; however, it must be demonstrated that protection equivalent to K18 is being provided.

13.16. Static Missile Battery Separation. To ensure optimal effectiveness, offensive and defensive missile batteries many times must be deployed in a static (non-mobile role) in the proximity of other AE operations such as field storage or flight lines. The following criteria apply to deployed static missile batteries and associated support functions.

13.16.1. IMD (K11) will be maintained between missile launchers, reloads and other AE storage locations to include parked AE loaded aircraft.

13.16.2. Missile batteries deployed within the IBD of AE storage areas may be sited at K18 to manned functions considered related to area AE operations. Likewise, missile batteries deployed in the clear zones of flight line operations may be sited at K18 to manned flight line facilities.

13.16.3. Those functions solely providing support to static missile units, such as motor pools, may be sited at K18 to batteries and other AE activities when the missile battery is located in these areas. For asset preservation, use PTRD.

13.16.4. No separation is required between missile batteries and the security force structures exclusively supporting them.

13.17. Emergency Destruction. When it becomes necessary to destroy stores of AE to prevent them from falling to the enemy, care must be taken to ensure that assets otherwise not in danger of falling to the enemy are not destroyed by blast or fragments. MAJCOMs will develop specific guidance for the implementation of and training for emergency destruction of munitions, if applicable. Normal disposal operations will be conducted in accordance with paragraphs 12.73 and 12.74.

13.18. Separation From Fuel.

13.18.1. Operational Storage. Quantities up to 500 gal will be separated from each PES by at least 50 ft. Quantities between 500 to 5,000 gal will be separated from each PES by at least 100 ft. Fuel shall be located downhill and diked to contain a possible fuel spill.

13.18.2. Bulk Fuel Storage. For more than 5,000 gal apply paragraph 12.81.

Table 13.1. QD for BLAHA and BLSA.

NEWQD (lbs)	D1 (ft)	D2 (ft)	D3 (ft)	D4 (ft)	D5 (ft)	D6 (ft)
10	4	13	26	591	886	66
15	5	15	30	591	886	66
20	5	16	33	591	886	66
30	6	19	37	591	886	66
50	7	22	44	591	886	66
70	8	25	49	591	886	66
100	9	28	56	591	886	66
150	11	32	64	591	886	81
200	12	35	70	591	886	99
300	13	40	80	591	886	130
500	16	48	95	591	886	
700	18	53	107	591	886	
1,000	20	60	120	591	886	
1,500	23	69	137	591	886	
2,000	25	76	151	591	886	
3,000	29	87	173	591	886	
5,000	34	103	205	591	886	
7,000	38	115	230	669	1021	
8,818	41	124	248	751	1146	

NOTES:

1. D1 is used for:

a. Side-to-side, side-to-rear and rear-to-rear exposures between undefined ECM, provided the earth cover complies with paragraph 6.8 and the explosives are stored at least 3 ft from the end of the ECM.

b. Non-armored vehicle (PES) to non-armored vehicle (ES) when an adequate barricade per Section 6E is located between them.

c. Light armored vehicle (PES) to non-armored vehicle (ES) when an adequate barricade per Section 6E is located between them.

d. Light armor or non-armored vehicle (PES) to light armored vehicle (ES) when an adequate barricade per Section 6E is located between them.

e. Determining D1 and NEWQD for D1 (NEWQD in lbs, D in ft):

$D1 = 2*NEWQD^{1/3}$

$NEWQD = (D1/2)^3$ (8,818 lbs maximum)

2. D2 is used for:

a. Front-to-front exposures involving undefined ECM when there is an adequate barricade (per Section 6E) at the ES.

b. Non-armored or light armored vehicles to the side or rear of an undefined ECM.

c. Determining D2 and NEWQD for D2 (NEWQD in lbs, D in ft):

$D2 = 6*NEWQD^{1/3}$

$NEWQD = (D2/6)^3$ (8,818 lbs maximum)

3. D3 is used for:

a. Non-armored vehicles to non-armored vehicles without an adequate barricade.

b. Light armored vehicles to non-armored vehicles without an adequate barricade at the non-armored vehicles.

c. Undefined ECM to undefined ECM when positioned front-to-front and no barricade is present.

d. Non-armored vehicles, light armored vehicles or undefined ECM to the front of undefined ECM when no barricade is present at the ES.

e. Determining D3 and NEWQD for D3 (NEWQD in lbs, D in ft):

$D3 = 12*NEWQD^{1/3}$

$NEWQD = (D3/12)^3$ (8,818 lbs maximum)

4. D4 is used for PTRD from non-armored and light armored vehicles. Determining D4 and NEWQD for D4 (NEWQD in lbs, D in ft):

$NEWQD \leq 5{,}500$ lbs	D4 = 591 ft.
$5{,}500 \text{ lbs} < NEWQD \leq 8{,}818$	$D4 = 8*NEWQD^{1/2}$
$D4 < 591$ ft	NEWQD = 0 lbs

591 ft $\leq$ D4 $\leq$ 751 ft NEWQD = $(D4/8)^2$ (8,818 lbs maximum)

5. D5 is the IBD from non-armored and light armored vehicles. Determining D5 and NEWQD for D5 (NEWQD in lbs, D in ft):

NEWQD $\leq$ 5,500 lbs	D5 = 886 ft.
5,500 lbs < NEWQD $\leq$ 8,818 lbs	D5 = $12.2*NEWQD^{1/2}$
D5 < 886 FT	NEWQD = 0 lbs
886 ft $\leq$ D5 $\leq$ 1146 ft	NEWQD = $(D5/12.2)^2$ (8,818 lbs maximum)

6. D6 is used to determine the IBD and PTRD from heavy armor vehicles. When NEWQD exceeds 331 lb the IBD and PTRD specified in Chapter 12 apply. Determining D6 and NEWQD for D6 (NEWQD in lbs, D in ft):

NEWQD $\leq$ 110 lbs	D6 = 66 ft
110 lbs < NEWQD $\leq$ 331 lbs	D6 = $-4.49 + 0.487*(NEWQD^{1/3}) + 2.928*(NEWQD^{1/3})^2$
D6 < 66 ft	NEWQD = 0
66 ft $\leq$ D6 $\leq$ 138 ft	NEWQD = $(0.0833 + [1.5421 + 0.3416*D6]^{1/2})^3$

Table 13.2. QD Requirements for Armored Vehicles. 1,2,3

TO EXPOSED SITE	EXPOSURE	FROM POTENTIAL EXPLOSION SITE		
		HEAVY	LIGHT	NON-ARMORED
HEAVY	IMD	N/R	N/R	N/R
LIGHT	IMD	N/R	D1 from Table 13.1	D1 from Table 13.1
NON-ARMORED	IMD	N/R	D3 from Table 13.1	D3 from Table 13.1
	PTRD	D6 from Table 13.1	D4 from Table 13.1	D4 from Table 13.1
	IBD	D6 from Table 13.1	D5 from Table 13.1	D5 from Table 13.1

NOTES:

1. Application of D1 and D2 distances above may require the use of a barricade between PES and ES. Refer to table 13.1. notes regarding the need for a barricade.

2. N/R = No IMD required

3. Use K24 or K30 instead of D1 and D3 for asset preservation.

Table 13.3. QD for Field Storage and Handling Areas. 1,2

TO EXPOSED SITE	FROM POTENTIAL EXPLOSION SITE					
	Storage Sections	**AE Staging Area**	**Captured Enemy Ammunition Area**	**AE Operations Area**	**Sling-Out Area**	**AE Destruction Area**
Storage Sections	IMD Note 3	IMD Note 3	PTRD[4] PTRD[4]	IMD Note 3	IMD Note 3	Note 6
AE Staging Area	IMD Note 3	IMD Note 3	PTRD[4] PTRD[4]	IMD Note 3	IMD Note 3	Note 6
Captured Enemy Ammunition Area	IMD Note 3	IMD Note 3	IMD PTRD[4]	IMD Note 3	IMD Note 3	Note 6
AE Operations Area	IMD Note 3	IMD Note 3	PTRD[4] PTRD[4]	IMD Note 3	IMD Note 3	Note 6
Sling-Out Area	N/R Note 3	N/R Note 3	PTRD[4] PTRD[4]	IMD Note 3	IMD Note 3	Note 6
Administrative and Billeting Area	IBD[5] IBD[5]	IBD[5] IBD[5]	IBD[5] IBD[5]	IBD[5] IBD[5]	IBD[5] IBD[5]	Note 6
Boundaries	IBD[5] IBD[5]	IBD[5] IBD[5]	IBD[5] IBD[5]	IBD[5] IBD[5]	IBD[5] IBD[5]	Note 6
Manned Non-Explosive Support Facility	ILD Note 3	ILD Note 3	IBD[5] IBD[5]	ILD Note 3	ILD Note 3	Note 6
Unmanned Non-Explosive Support Facility	N/R Note 3	N/R Note 3	PTRD[4] PTRD[4]	N/R Note 3	N/R Note 3	Note 6
AE Destruction Area	Note 6	Note 6	Note 6	Note 6	Note 6	Note 6

NOTES:

1. N/R = Not Required.

2. The distance criteria in the upper half of each row are the minimum separation distance in accordance with Chapter 12. The distance criterion in the lower half of each row is the asset preservation distance.

3. For HD 1.1 material, use K24 or K30. For HD 1.2, 1.3, or 1.4 apply PTRD from Chapter 12.

4. PTRD includes minimum fragment distance.

5. IBD includes minimum fragment distance.

6. In accordance with paragraphs 12.73 and 12.74.

Table 13.4. QD for Contingency, Combat, and MOOTW Airfields.

TO EXPOSED SITE	FROM AIRFIELD POTENTIAL EXPLOSION SITE	
	MINIMUM SEPARATION DISTANCE	ASSET PRESERVATION DISTANCE
Manned functions not related to the combat mission	IBD	IBD
Base boundaries without an easement unless manifestly unsuitable for inhabitation	IBD	IBD
Crew support and billeting area	IBD	IBD
Central airfield support facilities	ILD	Note 1
Manned functions related to the explosives mission	ILD	Notes 1 and 2
Flight line fire and rescue services	ILD	Note 1
Manned munitions operations locations (assembly, maintenance, refurbishment, etc.)	ILD	Note 1
Any other explosives loaded aircraft or CAPA	IMD	Notes 1 and 2
Flight line munitions holding area	IMD	Notes 1 and 2
Military use runways and taxiways	K4.5	Notes 1 and 2

NOTES:

1. For HD 1.1 material, use K24 or K30. For HD 1.2, 1.3, or 1.4 apply PTRD from Chapter 12.

2. For aircraft, asset preservation distances may not provide protection from fragments. To protect against low-angle, high-energy fragments, aircraft should be barricaded (see Section 6E).

Chapter 14

EXPLOSIVES SITE PLANNING

Section 14A—Introduction

14.1. Purpose of Explosives Site Planning. Explosives site planning is a process used to manage the risks associated with explosives activities to ensure the minimum risk to personnel, equipment, and assets, while meeting mission requirements. Planning for the proper location and construction of explosives facilities, and facilities exposed to explosives facilities, is a key element of the explosives site planning process. This process also ensures that risks above those normally accepted for explosives activities are identified and presented to the appropriate commander for approval. The explosives site planning process is applicable to all day-to-day (to include training and exercises), contingency, combat, and MOOTW activities, as well as wartime planning.

14.2. Responsibilities for Explosives Site Planning. Safety, in coordination with civil engineering, fire, health, security, and environmental agencies, is responsible for performing explosives site planning.

14.2. (ACC)Responsibilities for Explosives Site Planning. Direct Reporting Unit (DRU), NAF and wing weapons safety staffs have oversight responsibility for formulating, coordinating and submitting ESPs. NAF's are required to review ESP's utilizing **Attachment 6**. Engineering and using agencies will provide necessary information and documents required for ESPs. DRU, NAF and wing supplements to AFMAN 91-201 will include detailed procedures, actions and requirements of applicable agencies in the site plan process.

Section 14B—Explosives Clear Zones

14.3. Explosives Clear Zones. The explosives clear zone is the area surrounding a PES which is determined by the required IB separation. The IB separation will be based on the sited, waivered, exempted, or actual explosives limits of the potential explosion site, whichever is greatest.

14.4. Monitoring of Explosives Clear Zones. Safety and civil engineering will monitor and control construction and facility utilization inside explosives clear zones. Management of explosives safety clear zones is a cornerstone of the explosives site planning process.

14.5. Mapping Requirements for Explosives Clear Zones.

14.5.1. Explosives clear zones for all approved day-to-day and war plan explosives site plans (ESP) will be reflected on the installation Comprehensive Plan Maps C-1, D-8, E-9 and M-3 (as applicable). For tiered siting, (see **paragraph 14.20**) only the largest explosives clear zone need be shown, except on the D-8 which must show the explosives clear zones for all tiers. Explosives clear zones must reflect the DDESB-, AFSC- or MAJCOM-approved net explosives weight and IB distance.

14.5.2. The weapons safety manager will assist civil engineering in determining the explosives clear zones required on appropriate base maps.

14.5.3. Explosives clear zones need not be changed on base maps when they are expanded for a short-term (1 year or less) situation, such as for a waiver lasting less than a year.

14.6. Reduction or Re-designation of Explosives Clear Zones. When a permanent reduction or re-designation of any explosives clear zone is required, a coordinated (installation safety, civil engineering, and logistics) request letter is prepared and submitted to the host MAJCOM Safety Office through the respective MAJCOM activity offices. Requests must be signed by the installation commander and include justification for the reduction. To better evaluate the impact if the reduction is not approved, include a clear zone map showing both the old and the proposed clear zones. No actions will be taken to redraw base maps until DDESB approval is received. MAJCOM approval is needed for complete removal of clear zone. MAJCOM will forward a copy of the approval to AFSC/SEW.

Section 14C—Explosives Site Plans

14.7. Explosives Site Plans. Explosives Site Plans (ESPs) are a method to document the results of the explosives site planning process. An ESP package consists of all the information necessary to assess compliance with explosives safety standards (especially QD). Once approved, the ESP identifies storage and operational limitations, and provides a tool for managing risks associated with the storage or operating location.

14.8. Funding for Projects Requiring Explosives Site Plans. Prior to approval of an ESP, expend only limited Air Force funds on the ESP project. ESP approval is covered in paragraph 14.15. All funds spent prior to approval may be placed at risk if explosives safety standards are not followed properly. The investment could be lost if site plan approval is contingent on changes or new facility requirements that were not considered or adequately addressed during the ESP preparation and review process. It is strongly suggested that at least Preliminary ESP approval (see **paragraph 14.13**.) be obtained before awarding a contract for new construction of explosives facilities or non-explosives facilities within an explosives clear zone.

14.8. (ACC)Funding for Projects Requiring Explosives Site Plans. The wing WSM will participate in all development phases, design review meetings and request for proposal submittals. The WSM will point out unique explosive safety requirements and act as an advisor to the project engineer to ensure the requirements of the Department of Defense Explosives Safety Board are incorporated into the design effort.

14.9. Situations Requiring Explosives Site Plans. ESPs will be developed and submitted for review and approval for the following situations:

14.9.1. New construction of explosives facilities.

14.9.2. New construction of non-explosives facilities within an explosives clear zone.

14.9.3. Modification or change to the use of explosives facilities, as required per paragraph 14.11.

14.9.4. Modification or change to the use of non-explosives facilities within an explosives clear zone, as required per paragraph 14.11.

14.9.5. Recurring training and exercise explosives activities which occur in fixed locations, except as allowed in paragraph 14.10.9.

14.9.6. War plan explosives activities. War plan explosives activities are those that are planned in response to an approved operational plan. They are only projections based on possible or likely scenarios, and include planned operations at collocated operating bases (COBs).

14.9.7. Contingency, combat, and MOOTW explosives activities, as required per Chapter 13.

14.10. Situations Not Requiring Explosives Site Plans. ESPs are not required for the following situations:

14.10.1. Storage and associated HD 1.4S handling (see **paragraph 12.29.3**.).

14.10.2. Interchange yards limited to those operations described in paragraph 12.59.

14.10.3. Inspection stations where only the operations described in paragraph 12.58. are performed.

14.10.3. **(ACC)** Identify vehicle inspection/suspect areas on the Base Comprehensive Plan to include: Hazard Class/Division (HC/D), NEW and the IBD clear zone.

14.10.4. Parking aircraft loaded with specific munitions (see **paragraph 12.47**., while the aircraft is located in designated aircraft parking areas that meet airfield criteria. This includes associated handling of these munitions, provided the quantity of munitions involved in the operation is limited to a single aircraft load.

14.10.5. Hung ordnance areas, arm or de-arm areas, and hot pit refueling areas not used as parking areas (see **paragraph 12.44**. **and 12.45**.), unless they are located in an explosives clear zone. In that case, they will be sited as a non-explosives exposed site.

14.10.6. Licensed explosives storage locations, unless they are located in an explosives clear zone. In that case, they will be sited as a non-explosives exposed site.

14.10.7. Explosives operations associated with licensed explosives storage locations.

14.10.8. Inert storage accessed by personnel related to the explosives mission.

14.10.9. Activation of simulators and smoke-producing devices in single or small quantities when used in conjunction with exercises and training (to include readiness inspections). See **paragraph 7.26** for guidance.

14.10.10. Unmanned, non-explosives miscellaneous structures that have a QD requirement of fifty feet or less do not require an ESP, even if new construction is involved.

14.11. Facility Modifications or Change in Use. Existing explosives facilities and exposed facilities within explosives clear zones may require modification or change in use to meet changing mission requirements. Such modifications and changes in use must be evaluated to determine if they affect the application of explosives safety requirements as approved in the original ESP.

14.11.1. A new ESP is required if the facility modification or change in use may require the application of new or more stringent explosives criteria as follows:

14.11.1.1. Classification of the facility for QD purposes is changed (e.g., explosives storage facility is changed to an operating location).

14.11.1.2. NEWQD is increased.

14.11.1.3. New HD is introduced.

14.11.1.4. Overall floor space is increased (to include vertical additions).

14.11.1.5. Additional personnel performing a different function are introduced.

14.11.1.6. Effectiveness of built-in safety features is compromised (e.g., opening is made in a SDW).

14.11.1.7. The installation of a new lightning protection system (e.g., the complete replacement of an existing system or replacing an integral system with a mast or catenary system).

14.11.2. If the facility modification or change in use does not require the application of more stringent QD criteria and is not covered by a waiver or exemption, a letter describing the facility modification or change in use is required and will be submitted to the MAJCOM for approval. Prior to approval, the MAJCOM will ensure the facility modification or change in use does not affect the explosives safety criteria applied in the original ESP.

14.11.2. **(ACC)** Submit the letter with an updated AF form 943 and ESP map showing the new relationship.

14.11.3. Any modification or change in use to a facility covered by a waiver or exemption to this standard must be reviewed by AFSC/SEW. MAJCOM/SEW will submit a letter thoroughly describing the facility modification or change in use. AFSC/SEW will provide appropriate siting actions required.

14.11.4. Do not start construction on a project requiring an ESP until approval is granted by the DDESB. For site plans covering day-to-day operations where no construction is involved, do not start explosives operations or non-explosives operations within explosives clear zones until the site plan is approved at MAJCOM level. The Combatant Commander may authorize explosives operations or construction pending siting approval for operations in support of or in expectation of actual MOOTW, contingency, and combat operations.

14.12. Explosives Site Plan Development and Installation-level Coordination.

14.12.1. The civil engineer or facility user notifies weapons safety as soon as a need is identified to build, modify, or change the use of any explosives facility or non-explosives facility located within an explosives clear zone. Weapons safety determines the need for an ESP and solicits the information to prepare the request.

14.12.2. The civil engineer assists safety in development of the ESP by providing current maps or drawings and technical facility design assistance. Also, the civil engineer supplies facility design information such as construction, grounding, technical facility design assistance, and lightning protection information.

14.12.3. Site for maximum weights based on actual separation distances or capacity for storage locations; however, for other locations site for MEQ/operational limits.

14.12.4. Coordinate the ESP with civil engineering and the user. Coordinate with fire, health, security, legal and environmental agencies, as appropriate.

14.12.5. Coordinate the ESP with bioenvironmental engineering if it involves biological and chemical fillers, liquid propellants, toxic gases, sonic hazard areas, any form of electromagnetic radiation, laser or other directed energy weapons (DEW) affecting health or the environment on-base (including radioactive sources and microwave generators and industrial x-ray). The MAJCOM will forward an information copy of the ESP to the AF Medical Support Agency (AFMSA/SG3PB), 1400 Key Blvd, Suite 400, Arlington VA 22209.

14.12.6. When tenant facilities, including those of other services, are exposed, coordinate the ESP with the tenant unit. For ESPs that expose host nation tenant facilities or areas, notify the host nation commander of the exposure and obtain host nation approval as required by international treaty or status of forces agreement.

14.12.7. In cases where the explosives clear zone encroaches onto adjacent government agencies, such as another Air Force, or an Army, Navy or Marine installation, obtain written acknowledgement from the exposed service component for inclusion with the ESP. (Note: It will be up to the acknowledging agency to update their maps to reflect the explosives clear zone for their future planning purposes.)

14.12.8. ESPs involving contractors must be reviewed and approved through the Defense Plant Representative Office (DPRO), Administrative Contract Office (ACO) and the Designated Acquisition Official's (DAO) safety office prior to Air Force processing. Local level shall coordinate with responsible contracting officer.

14.13. Explosives Site Plan Contents. ESPs will contain the information described in Section 14D. In some instances, a compressed timeline (such as that imposed by the design and build process) may require contract award or site preparation activities (e.g., facility demolition, grading or other site preparation) before all of the information required in Section 14D is available. In these instances, request Preliminary ESP approval. Preliminary ESPs will include the information required in Section 14D, except for facility construction drawings and any required structural engineering analyses. Specifically address the action for which approval is requested (e.g. contract award, facility demolition). Submit a request for Final ESP approval as soon as the construction drawings and any required structural engineering analyses are completed.

14.14. Explosives Site Plan Submission and MAJCOM and Air Force-level Coordination Process.

14.14.1. The ESP originates at the installation level (See **paragraph 14.26**.). The primary means for ESP origination is through the use of ASHS. MAJCOM/SEW will review the ESP for accuracy and compliance with the standards in this Manual and applicable MAJCOM supplements. MAJCOMs will then electronically submit the coordinated ESP to AFSC/SEW (unless the ESP may be approved by the MAJCOM per paragraph 14.15). Include a MAJCOM endorsement stating approval along with any changes, modifications or specific precautionary measures considered necessary. After review by AFSC/SEW, the ESP is endorsed and electronically submitted to the DDESB for approval. Reviewing agencies will provide the ESP originator and previous review agency a copy of comments or changes made which affect the original intent of the ESP. Any change affecting the content of the unit's ASHS database would require changes made at the unit.

14.14.2. **Air Force Host to Tenant Relationships.** ESPs for tenant units will be sent through host installation and tenant command channels. In cases where the host violates ESQD to a tenant facility, the host MAJCOM will obtain coordination from the tenant MAJCOM before processing the ESP. Where no violation exists, provide an information copy of the ESP to the tenant MAJCOM when processing to AFSC/SEW. If required by the tenant MAJCOM, the ESP must meet the requirements of the tenant MAJCOM supplement to this Manual.

14.14.3. **Inter-service Host to Tenant Relationships.**

14.14.3.1. When an Air Force unit is tenant on an Army, Navy or Marine installation, request ESP approval through that service. The ESP must meet the QD requirements of this Manual in addition to all host agency criteria. Submit an information copy of the ESP request through the MAJCOM to AFSC/SEW.

14.14.3.2. Tenant Army, Navy or Marine units forward ESP requests through Air Force host installation channels. Air Force host will assist tenant units in preparing the ESP. In cases where the Air Force host violates ESQD to a tenant facility, the host MAJCOM will obtain coordination from the tenant MAJCOM equivalent before processing the ESP. Where no violation exists, provide an information copy of the ESP to the tenant MAJCOM equivalent when processing to AFSC/SEW.

14.14.3.3. AFSC/SEW will coordinate with the applicable service component before processing the ESP. In cases where the Air Force host violates ESQD to a tenant facility, AFSC/SEW will obtain coordination from the applicable service component before processing the ESP. Where no violation exists, an information copy of the ESP will be sent to the applicable service component when processing for final approval.

14.14.4. AFSC/SEW will coordinate requests for ESP approval with the applicable service component if an Air Force explosives clear zone encroaches onto an adjacent Air Force, Army, Navy or Marine installation.

14.14.5. The installation or MAJCOM may request expeditious AFSC/SEW processing of an ESP with the exception of an ESP requiring SAF/IE acceptance of risk or SECAF approval for new construction. Requests for expeditious processing of an ESP will include the information required in paragraph 14.22.19. MAJCOM/SE must endorse an installation request for expeditious processing for AFSC/SEW to act on the request.

14.14.5. **(ACC)** The wing safety office, civil engineer (CE) and the using organizational group commander must coordinate on all expeditious requests. CE coordination is required only when siting involves construction.

14.15. Explosives Site Plan Approval.

14.15.1. Except as authorized in paragraph 14.15.2, ESPs will be approved as follows:

14.15.1.1. Day-to-day ESPs will be approved by DDESB, unless they contain a waiver or exemption. Day-to-day ESPs with waivers or exemptions will be submitted as Hybrid Safety Submissions (HSS) to the DDESB for final approval after approval of the waiver or exemption in accordance with Section 1B. Do not start new construction until authorized by the approved ESP. (Note: If included in the ESP request, Preliminary ESP approval may authorize some construction planning activities to begin. See **paragraph**

14.13.) Do not commence explosives operations or events unless authorized by an approved operational waiver in accordance with paragraph 1.5. Operational waiver documentation requirements prescribed in paragraph 1.5.4 may be addressed in the ESP submission to the MAJCOM and AFSC/SEW. Once the ESP is reviewed by AFSC, the ESP is transmitted to the greatest extent possible by electronic means to the DDESB or the MAJCOM is notified of additional information needed to gain DDESB approval. If additional information is needed to complete the ESP package, it should be provided within 45 days of AFSC initial review comments or notification to AFSC from the MAJCOM with a status of delay and estimated response date. If continued delay of gathering additional information is encountered, AFSC will return the ESP as disapproved, with a detailed explanation of the reason for disapproval. At this time, the operational waiver authorization for operations to commence is invalidated. The entire ESP may be resubmitted under a new control number once all criteria is met and included in the ESP submission.

14.15.1.2. Contingency, combat, and MOOTW ESPs will be approved as required per Chapter 13, unless they involve new construction. Contingency, combat, and MOOTW ESPs involving new construction will be approved by the DDESB, unless they contain waivers or exemptions. Contingency, combat, and MOOTW ESPs involving new construction with waivers or exemptions will be submitted as HSS to the DDESB for final approval after approval of the waiver or exemption in accordance with Section 1B. The Combatant Commander may authorize new construction to begin in support of or in expectation of actual contingency, combat, and MOOTW operations.

14.15.1.3. War plan ESPs will be approved by the MAJCOM/CC/CV, unless they involve new construction; MAJCOM will provide a copy of the ESP to AFSC/SEW. War plan ESPs involving new construction will be approved by the DDESB, unless they contain waivers or exemptions. War plan ESPs involving new construction with waivers or exemptions will be submitted as HSS to the DDESB for final approval after approval of the waiver or exemption in accordance with Section 1B. Do not start construction until authorized by the approved ESP. (Note: If included in the ESP request, Preliminary ESP approval may authorize some construction activities to begin. See **paragraph 14.13**.) Combined day-to-day and war plan ESPs (e.g. using tiered siting) will be approved according to paragraph 14.15.1.1.

14.15.2. Approval levels for unique situations are as follows:

14.15.2.1. ESPs for training and exercise areas using flares, simulators, and smoke producing devices (HD 1.2.2, 1.3 and 1.4 only), and not within an established clear zone, will be approved by the MAJCOM. This applies to recurring training locations and not to exercise support activities that move each time in accordance with exercise scenarios. Required separation distances will be documented per paragraph 7.26. for exercise support activities that do not have a fixed location.

14.15.2.1. **(ACC)** The exercise play area(s) will comply with AFMAN 91-201 para 7.26. and 7.27. and any local directives during local or HHQ operational readiness exercises/inspections.

14.15.2.2. ESPs for installation of WSVs in HASs with previously approved ESPs will be approved by the MAJCOM.

14.15.2.3. ESPs for Contractor Owned Contractor Operated (COCO) facilities on non-government land will be approved by the Procuring Contract Officer (PCO) for Air Force contracts involving explosives or ammunition. ESPs are prepared and submitted by the contractor. These ESPs need not be forwarded to either AFMC, AFSC, or the DDESB. The Defense Contract Management Agency evaluates the ESP and provides approval or disapproval recommendations to the PCO.

14.15.2.4. ESPs for Government Owned Contractor Operated (GOCO) facilities and COCO facilities on government land will be approved by the DDESB. Waivers and exemptions will be approved by the responsible PCO and Air Force command level as prescribed in chapter 1.

14.15.2.5. ESPs for non-DoD explosives activities on Air Force installations will be approved by the DDESB (see paragraph 14.17).

14.16. Maintenance of Approved Explosives Site Plans. Approved ESPs (including the approval letter) will be maintained by the installation safety office and using organization.

14.16. (ACC)Maintenance of Approved Explosives Site Plans. The wing WSM will track all submitted/pending explosives site plans to approval.

Section 14D—Explosives Site Plan Requirements

14.17. Explosives Site Plans for Non-DoD Explosives Activities on Air Force Installations.

14.17.1. ESPs for non-DoD explosives activities on Air Force installations will include a risk assessment for all exposed government personnel, equipment, and assets (within or outside the explosives clear zone) and documented risk acceptance by the responsible commander. The responsible commander must consider the possible impact to current and future DoD mission requirements in the event of a mishap. Non-DoD user insurance coverage for government equipment and assets will not, by itself, be adequate justification for exposure to unacceptable risk.

14.17.2. ESPs for non-DoD explosives activities on Air Force installations will either be prepared in accordance with the requirements of this section, or will be “foot print” only ESPs. Foot print ESPs will contain only the information necessary to determine the explosives clear zone (i.e., building design, LPS, etc., will not be included unless it is used to determine the explosives clear zone).

14.17.3. ESP approval alone does not authorize the conduct of non-DoD explosives activities on Air Force installations (see **paragraph 12.88**.).

14.17.4. See **paragraph 12.88**. for QD criteria for non-DoD explosives activities on Air Force installations, and paragraph 1.9 for guidance on exceptions to this Manual.

14.18. Siting a Non-Explosives Exposed Site. For new construction, modification, or change in use of non-explosives facilities within an explosives clear zone it is acceptable to submit an ESP for the non-explosives facilities. These ESPs will comply with all applicable requirements of this section and include QD evaluations for all PESs within the evaluation zone. See **paragraph 14.24.7**., Table 14.1. and Figure 14.1.

14.19. Explosives Site Plans Involving Exceptions. ESPs involving exceptions to this Manual will include the information required per Section 1B.

14.20. Tiered Explosives Site Plans. Tiered ESPs may be useful when the NEWQD of a PES varies because of operational requirements (e.g., day-to-day, exercise, war plan, contingency, combat, and MOOTW). It may also be useful when it is not practical on a day-to-day basis to meet the required QD separation from a PES to all ESs for the largest possible NEWQD. Under the tiered ESP concept, the responsible commander may take management actions (e.g., removal of personnel or equipment, re-designation of exposed sites) before introducing explosives or increasing the NEWQD of a PES.

14.20.1. To prepare tiered ESPs, determine the NEWQD required for each type of activity at the PES and the QD separation required to each ES for each NEWQD. In instances where the required QD separation cannot be met at a given NEWQD, determine if management actions may be taken to meet the required QD separation. If the required QD separation cannot be met even with management actions, process a waiver or exemption in accordance with Section 1B.

14.20.2. Prepare a management plan to document management actions required for each tier of the ESP. This management plan may be implemented as a base operations plan, operating instruction, agreement, supplement or other appropriate publication. The management plan must specify:

14.20.2.1. Description of each management action required.

14.20.2.2. Conditions under which each management action will be directed and when they will take place.

14.20.2.3. The organization responsible for implementing each management action.

14.20.2.4. Requirement for periodic review of the management plan to ensure continued viability of the planned management actions.

14.20.3. Tiered ESPs will:

14.20.3.1. Include an AF Form 943,*Explosives Site Plan* for each tier, and assign a separate ESP action number to each tier.

14.20.3.2. Reference the document which implements the management plan required in paragraph 14.20.2. It is not necessary to include a copy of this document.

14.21. Components of the Explosives Site Plan. ESPs must include all the information needed for the reviewer to determine if the explosives safety requirements of this Manual are being met. Although the exact contents of an ESP may vary depending on the activity to be sited, ESPs generally include a transmittal letter, an AF Form 943, a site location map, and various attachments. For some ESPs, a transmittal letter containing pertinent information and a map may be all that is necessary. Other ESPs may require documentation such as detailed drawings, engineering analyses, risk assessments, commanders' risk acceptances, etc, in order to verify compliance with explosives safety requirements. See **paragraph 14.26**.

14.22. Transmittal Letter.

14.22.1. The transmittal letter is important for getting an ESP successfully reviewed and approved. Generally, all aspects of the siting should be explained; attempt to answer any

questions before it is raised. Consider that personnel reviewing the ESP may not be familiar with the base or operation, including unique terminology, and do not know the mission or specific circumstances. If the AF Form 943 contains a modification to the ASHS generated quantity-distance, explain the change in the transmittal letter. A sample transmittal letter is provided in Attachment 2.

14.22.2. Include the ESP action number in the subject line of the memorandum. ESP action numbers are developed as follows:

14.22.2.1. The requesting MAJCOM designation, followed by the tenant MAJCOM designation, if appropriate. Examples: USAFE, or AFMC-ACC.

14.22.2.2. The installation where the PES is located. Examples: Hill, Ramstein, or Logan.

14.22.2.3. Calendar year designation. Examples: 04, or 05.

14.22.2.4. An (S) identifier followed by a sequence number. Examples: S26, or S39. Number each request sequentially for each calendar year. For example, the first ESP for the calendar year would be S1. Canceled requests will not affect the number of subsequent requests. For example, if USAFE-Ramstein-04-S10 were canceled, the next ESP submitted for Ramstein AB in 2004 would be S11.

14.22.2.5. If the ESP involves QD exceptions, include the statement, "WITH EXCEPTIONS" immediately following the ESP action number. Example: ACC-Barksdale-04-S33, WITH EXCEPTIONS. If the ESP involves only compensatory measures that avoid all QD exceptions, include the statement, "WITH COMPENSATORY MEASURES" immediately following the ESP action number.

14.22.2.5.1. Units will develop a means to assure continued implementation of compensatory measures per MAJCOM direction.

14.22.2.5.1. **(ACC)** Compensatory measures will be implemented through emergency action checklist or other local instructions/publications. When ESPs contain compensatory measures, units will attach a digital copy of the instruction/publication to the ESP.

14.22.2.6. If the transmittal letter is for more than one ESP, include the ESP action number for each ESP. Examples: PACAF-Hickam-04-S5, S6, and S10, or AMC-Scott-05-S20 through S34.

14.22.3. Begin the letter by explaining the purpose of the submission. Example: "Request routine processing for subject site plan for preliminary approval." Identify whether the ESP supports day-to-day operations, war plan operations, day-to-day and war plan operations, or MOOTW, contingency, and combat operations. Identify if preliminary or final approval is being requested. If new construction is involved, include this statement in the subject line: "**Involving new Construction**." This ensures reviewing and approval authorities correctly prioritize the submission request for review.

14.22.4. State the reason(s) for the request. Examples: "to construct a new maintenance and inspection facility," or "to increase the NEWQD at an existing above ground magazine." Clearly identify whether new construction is being requested; expeditious and new construction ESPs will receive priority processing.

14.22.5. If the ESP replaces an existing ESP include a cancellation statement. Example: "The modification to this facility cancels ESP AFMC-Hill-02-S7."

14.22.6. State whether or not all explosives safety criteria will be met. If there are waivers or exemptions, provide a unique exception identification tracking number for each waiver or exemption. This number is developed using the format as described in paragraphs 14.22.2.1. through 14.22.2.5., with the following modifications:

14.22.6.1. Use the identifier (W) for waivers or (E) for exemptions instead of (S) for the identification tracking number in Column 10 of the AF Form 943 for the applicable exposure. This unique identification number will be based on the approval level, installation, and calendar year. Each installation will use their own numbering sequence. For example, use ACC-Hill-05-W01 as the first MAJCOM-level waiver identification number at Hill AFB for calendar year 2005. Use 388FW-Hill-05-W01 for the first wing-level waiver identification number. Subsequent site plan submissions with QD exceptions within the same calendar year would use the next available identification number at that installation for the type of exception required. For example, the next MAJCOM-level waiver identification number at Hill AFB would be ACC-Hill-05-W02 while the first MAJCOM-level exemption would use ACC-Hill-05-E01. This method will allow accurate tracking of exceptions based on the approval level, installation and calendar year. Include superseded waiver or exemption identification numbers if applicable.

14.22.7. If the ESP has any unique characteristics, explain what criteria is being applied and the basis for the application.

14.22.8. Describe compensatory measures if they are necessary to meet QD standards. The responsible commander must sign ESPs containing compensatory measures.

14.22.8.1. Units will develop a means to assure continued implementation of compensatory measures per MAJCOM direction.

14.22.9. For ESPs involving new construction, include the project identification and Programming, Design, and Construction (PDC) number.

14.22.10. Discuss any future plans that may impact this siting. State that the Base Facilities Board has reconciled this particular site plan with the base comprehensive plan. Provide meeting minutes, dated reference or written record of reconciliation.

14.22.11. Explain the format being used to record QD evaluation. Example: "The attached AF Form 943 and map show all exposures and required separations."

14.22.12. Provide a narrative description of the relevant explosives safety aspects of the facility design.

14.22.12.1. If the facility includes an LPS, state that it meets all design requirements of this Manual, NFPA 780, AFI 32-1065, and attach LPS drawings. For PESs, if the facility does not include an LPS, state what exception is being applied per paragraph 5.25., address any requirements relevant to that exception, and attach the commander's risk acceptance if required.

14.22.12.2. If protective construction features not previously approved by the DDESB are to be used (e.g., personnel shields, blast-resistant construction), a structural

engineering analysis and construction drawings must be attached (see paragraph 14.25.3). Provide a summary of the results of the structural engineering analysis.

14.22.12.3. Describe how compliance with the glass panel design requirements of Section 5B will be met. Attach a glass breakage risk assessment if required.

14.22.12.4. Describe results of EMR survey.

14.22.12.5. Describe unique safety aspects of the facility design such as the presence of hazardous locations, use of conductive floors, etc.

14.22.12.6. If the facility design is a standard design that the DDESB has previously reviewed and declared acceptable, construction drawings do not need to be submitted. Identify the drawing number and the source of previous DDESB approval (e.g., DDESB TP 15, *Approved Protective Construction*). HASs may be referred to by type (e.g., 3rd GEN, Korean TAB VEE). Contact MAJCOM/SEW if definitive drawing numbers are unknown. Describe any planned deviations from the standard design for purposes of local site adaptation (e.g., addition of gunite cover to an ECM to protect from erosion); do not make changes to standard designs that affect the explosives safety characteristics of the facility.

14.22.13. For tiered ESPs, identify the management plan implementation document.

14.22.14. Describe the evaluation zone used. State if the evaluation zone does not exceed the IB distance, or if there are no PESs in the evaluation zone.

14.22.15. State if a commanders authorized risk acceptance option is being applied and the derivative paragraph/table/note option allowing the commanders risk acceptance.

14.22.16. Identify and explain the purpose of all attachments.

14.22.17. Address compliance with ESP coordination requirements (e.g., notification or coordination with host nation officials, discussions with tenant units, etc.).

14.22.18. Staff agency point of contact in the event clarification is required.

14.22.19. If expeditious processing is being requested, include the following:

14.22.19.1. On the subject line of the memorandum state: "Request for EXPEDITIOUS processing of Explosives Site Plan (ESP) AFSPC-Vandenberg-04-S2."

14.22.19.2. Explain the reasons why expeditious processing is necessary. These reasons must show sufficient mission impact to warrant the expeditious processing, or the ESP will be reviewed according to the routine processing procedures.

14.22.19.3. Date when approval is needed and why it is needed by that date. Example: "Approval is required by 15 Jun 05 to support planned contract award for new construction." Require MAJCOM/SE approval and signature.

14.23. AF Form 943. AF Form 943 is used to provide PES and ES information and to validate required QD separation. Prepare a separate AF Form 943 for each PES (or ES in the case of an ES ESP) to be sited. See paragraph 14.27 for alternative formats to the AF Form 943. Instructions for completing AF Form 943 are provided in Figure 14.2. A sample AF Form 943 is provided in Figure 14.3. Include the following information on the AF Form 943:

14.23.1. ESP action number (see paragraph 14.22.2).

14.23.2. Location of the PES or ES being sited. If the location is not a military installation, list civilian or commercial address.

14.23.3. For explosives locations, identify all ESs and PESs within the IB distance, and all PESs within the evaluation zone (EZ) if it is larger than the IB distance. For ESPs with an IB distance less than 100 ft, ensure exposures requiring a minimum separation distance (e.g., 100 ft for parking areas exclusively supporting the PES) are identified. For non-explosive locations, identify all PESs within the EZ. For some non-explosive locations, it may not be necessary to identify all PESs; for example, unmanned miscellaneous structures requiring 50 feet separation from any PES can be sited by merely identifying the nearest PES.

14.23.4. The EZ is based on the QD type of the ES (e.g., Operating Location, CAPA), and the largest NEWQD PES on the installation. To determine the size of the EZ, when a K Factor is required use the largest HD 1.1 NEWQD authorized in a single PES on the installation or within the established clear zone (maximum of 500,000 pounds); see Table 14.1. For other HDs, use the minimum prescribed distances found in the appropriate QD tables. See Figure 14.1. for examples of EZs.

14.23.5. For all PESs and ESs, provide the following:

14.23.5.1. Assigned CE building number or other identifier. Examples: Bldg 123, or F123.

14.23.5.2. Applicable Table 12.(X) description. Examples: ECM, or Related Facility. Identify the presence of barricades if they affect the QD required.

14.23.5.3. Primary operation normally expected at the facility. Examples: shipping and receiving, maintenance and inspection, or bomb build-up. If facility type determines QD criteria applied, include definition of building such as Korean TAB VEE, 3rd Gen HAS, 26x60 igloo, 26x40 igloo, etc. Show definitive drawing numbers when available.

14.23.5.4. The organization whose assets or people will be in the facility. Include the MAJCOM, Wing, Squadron, and show unit designations by number and alpha designation. Include the branch of service if other than the Air Force. Example: USAFE-52FW.

14.23.5.5. Total number of people (M for Military or DoD Civilian, C for Non-DoD Civilian, DC for Defense Contractors, and FN for Foreign Nationals) normally assigned to the location. Consider the number of persons present during exercises. Do not include casuals such as inspectors or quality control evaluators. Include a breakdown by room or bay, when appropriate. Do not show people assigned to explosives storage locations, AECPAs, or CAPAs.

14.23.6. For all PES, provide the NEWQD for all HDs (HD 1.2.3, 1.5 and 1.6 may be omitted unless quantities will be present). Include MCE for HD 1.2.1. Include LSRN and parenthetical fragment distance for HD 1.2.3. If no LSRN is specified, use the NEWQD of the single round. If no NEWQD is provided, contact AFSC/SEW. For HD 1.4 show "Capacity" or "Op Limit." If no explosives in a particular HD will be present, type "None." For multiple room facilities, show values for each room where explosives will be present. Where IM is not provided between rooms or cubicles, show overall values for the facility. If

explosives are unpackaged see Section 3C. The explosive authorization must always show the sited, waived, or exempted weights, whichever is greater.

14.23.7. It is important to ensure facilities or locations being sited, whether explosive or non-explosive, within the IBD and EZ comply with QD requirements. This is accomplished by conducting a paired relationship evaluation. A facility or location where explosives will be present must be evaluated as both a PES and an ES. This is a two-way evaluation between the pair and the most restrictive distance between the pair is documented. A non-explosive ES is a one-way evaluation from surrounding PESs to the ES.

14.23.8. Identify the actual separation between each pair.

14.23.9. Using applicable Chapter 12 Table and applicable notes, identify the most restrictive (greatest) separation distance required between each pair for each HD, and the appropriate K-factor, minimum distance or rule used to determine this distance.

14.23.10. For each instance where the required separation is greater than the actual separation, provide the exception identification number (see paragraph 14.22.6).

14.23.11. For ESPs with waivers or exemptions, include the following:

14.23.11.1. Indicate the effect a maximum credible event at the PES would have on the unit mission, or other supported agencies (see Chapter 2).

14.23.11.2. Describe any corrective actions, compensatory measures, and controls to achieve safety during operations if the ESP is approved. State whether corrective action can or cannot be done locally with available funds or other resources. If there is no planned construction or other corrective actions, explain why. Show planned or programmed (funded and unfunded) actions to eliminate exceptions. Such action might include recommendations to higher headquarters, assigning priorities, funding revisions to standard facilities, etc. If there are other local projects underway that involve funding, show the following: construction priority assigned, Military Construction Program (MCP) item number and fiscal year for construction. Include any operational controls necessary.

14.23.11.3. Give the reason for the request. Describe the impact if the requested action is not approved.

14.23.12. If exceptions are involved, or if compensatory measures are used to prevent an exception, include approvals from the appropriate agencies and the responsible commander. For exceptions, the responsible commander's signature shows that the request is needed for the mission and that the risks are acceptable for strategic or compelling reasons. For compensatory measures, the responsible commander’s signature shows that the compensatory measures are acceptable and will be enforced.

14.24. Site Location Map. A sample site location map is provided in Figure 14.4.

14.24.1. Submit a map which clearly shows all the PESs and ESs relevant to the ESP.

14.24.2. Use a 1”= 400’ (or similar metric) scale. To enhance clarity or show precise measurements, a larger (1”=200’ or 100’) scaled map may be used. To properly reflect certain distance and structure relationships within the area surrounding the project, a smaller

scaled map may be used. Provide the scale on the map. Express all distances in feet, if feasible. An ASHS-generated map is acceptable.

14.24.3. Details such as the specific points of measurement, actual and required distance, and NEWQDs are encouraged.

14.24.4. When there is reasonable doubt about the accuracy of the mapped location, it is the responsibility of all participants in the explosives site planning process to define a locally acceptable method for determining the measurement accuracy required between the PES-ES locations.

14.24.5. If the base boundary is not shown on the map, the transmittal letter must certify the relationship of the explosives clear zone to the base boundary for ESPs.

14.24.6. When siting a PES, show all exposed sites within IBD of the PES. When there is an evaluation zone larger than the IB clear zone of the PES being sited show the evaluation zone (with dashed line) and the PESs in it.

14.24.7. When siting an ES, show the evaluation zone (dashed line) and all PESs in the evaluation zone.

14.24.8. Use color coding to simplify and speed the review process. Identify the PESs in red and ESs in green. Highlight the clear zone lines in red.

14.24.9. Include ESP action number, title and scale.

14.24.10. Show topographic contours or features, such as natural barricades (i.e. dense forest) or hills, if they are pertinent to the application of QD.

14.24.11. When siting multiple PESs show the IBD clear zone for each PES. Show a blended clear zone if it provides additional clarity.

14.24.12. **(Added-ACC)** Units will verify the accuracy of the ESP map using a secondary source (e.g., Google earth or Geobase via the Air Force portal).

14.25. Construction Drawings and Structural Engineering Analyses.

14.25.1. For facilities not being constructed in accordance with a previously DDESB-approved design (see paragraph 14.22.12.5), construction drawings showing applicable safety and protective features are required . These drawings must show, as a minimum, the following information:

14.25.1.1. Floor layout, roofs, windows, and general materials used.

14.25.1.2. Substantial dividing walls, vent walls, firewalls, operational shields and barricades.

14.25.1.3. Exits and fire protection system installations.

14.25.1.4. Types of floor finish, electrical systems and equipment, and ventilation systems and equipment.

14.25.1.5. Hazardous waste disposal systems

14.25.1.6. LPS and static grounding systems. See paragraph 14.25.2 for detailed LPS drawing requirements.

14.25.1.7. Process equipment.

14.25.1.8. Auxiliary support structures.

14.25.1.9. Drawings, specifications, rationale and base security manager approval of physical security designs when the design is different than standard construction methods used for explosive facilities.

14.25.1.10. Do not submit drawings (e.g., for landscapes or pavements) that are not relevant to QD or safety protective factors.

14.25.2. LPS drawings must include:

14.25.2.1. Elements of the lightning protection system, such as air terminals, masts, overhead wires, grounding electrode system and a description of the surge protection.

14.25.2.2. Top, front, side, and additional views as necessary depicting the dimensions (spacing and height) between design elements. Front and side elevations depicting air terminals and the 100-foot radius (200 feet diameter) rolling sphere zone of protection is suggested to facilitate the site plan review process.

14.25.3. For protective construction features not previously approved by the DDESB, provide construction drawings and a structural engineering analysis including:

14.25.3.1. Statement of the design objectives in terms of protection categories to be obtained (see DDESB TP 15, *Approved Protective Construction*).

14.25.3.2. The explosives quantities involved.

14.25.3.3. The design loads applied.

14.25.3.4. Any material properties and structural behavior assumptions made.

14.25.3.5. References and the sources of methods used.

14.25.3.6. Qualifications of the preparer. Only engineers who are experienced in the field of structural dynamics and who use design procedures accepted by professionals, in that field, may design explosion resistant facilities.

14.26. Automated Explosives Site Planning. ASHS is the preferred method of ESP development of the AF Form 943 and associated map. To the greatest extent possible, ASHS will be used for ESP creation. In the event an ASHS database is not available for the location requiring an ESP submission, manual means of ESP development may be used but must be electronically submitted to the greatest extent possible.

Section 14E—Deleted

14.27. Alternative AF Form 943 Formats. In some instances, modifications to the AF Form 943, or a substitute format in place of the AF Form 943, may be acceptable. Provide a description of the proposed alternative format, and justification for its use, to the MAJCOM for approval. MAJCOM will coordinate with AFSC/SEW prior to granting approval. Any alternative format used must still provide the information required in paragraph 14.23.

Figure 14.1. Evaluation Zone Examples.

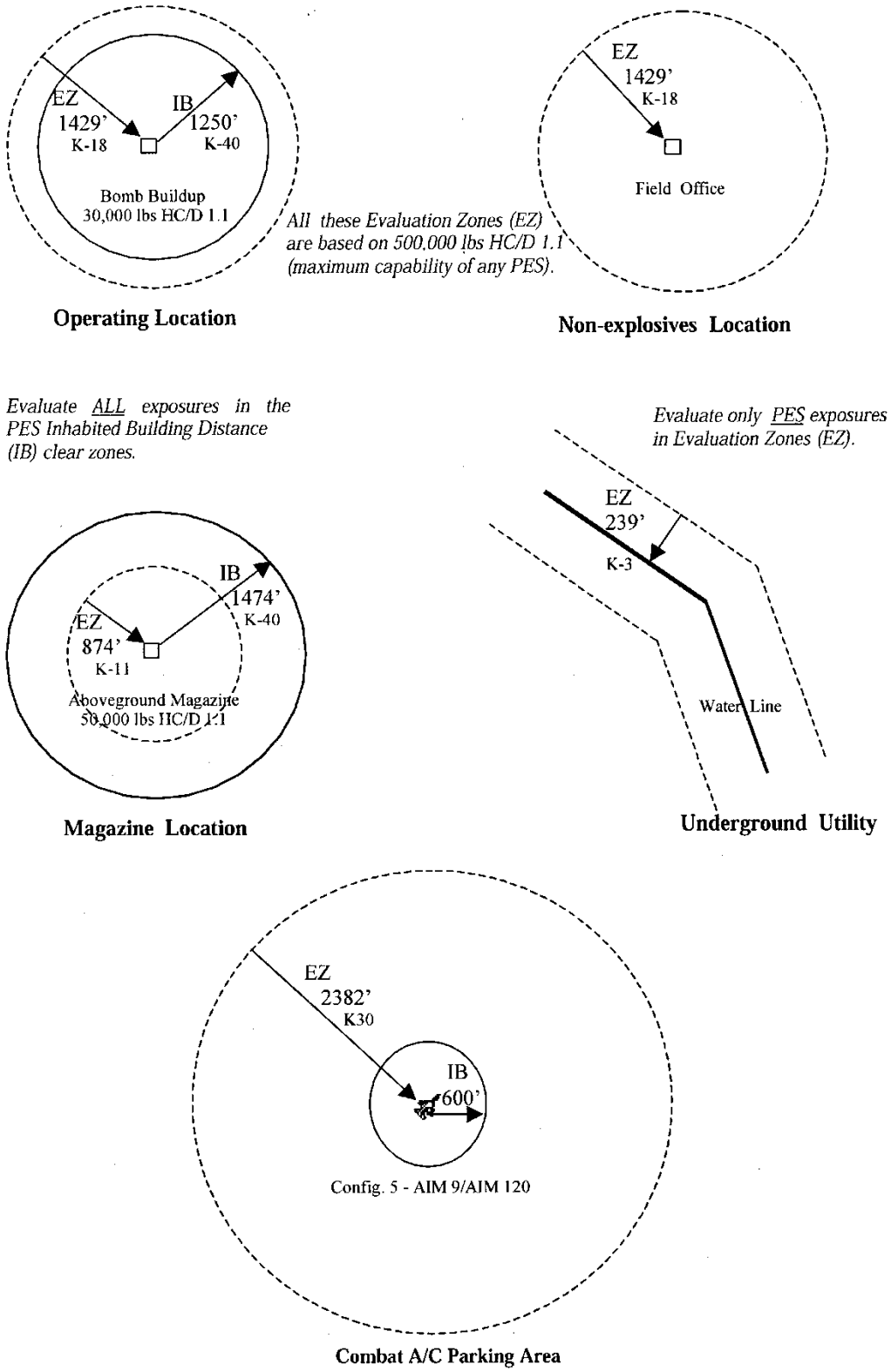

Figure 14.2. Instructions for Filling out AF Form 943.

Section I – General Information

Action Number. Enter the ESP action number per paragraph 14.22.2.
Base/Location. Enter the location of the PES or ES being sited. If other than a military base, list civilian or commercial address.
Date

Section II – Site Information

Column 1. Provide the assigned CE building number or other identifier. Examples: Bldg 123, or F123.

Column 2.
1. First line: Identify the facility being sited, using the applicable Table 12.(X) description. Examples: ECM, or Related Facility. Identify the presence of barricades if they affect the QD required.

2. Second line: Identify the primary operation normally expected at the facility. Examples: shipping and receiving, maintenance and inspection, or bomb build-up. If facility type determines QD criteria applied, include definition of building such as Korean TAB VEE, 3rd Gen HAS, 26x60 igloo, 26x40 igloo, etc. Show definitive drawing numbers when available.

Column 3. Identify the organization whose assets or people will be in the facility. Include the MAJCOM, Wing, Squadron, and show unit designations by number and alpha designation. Include the branch of service if other than the AF. Example: 52FW.

Column 4. Identify the total number of people (M for Military or DoD Civilian, C for Non-DoD Civilian, DC for Defense Contractors, and FN for Foreign Nationals) normally assigned to the location. Consider the number of persons present during exercises. Do not include casuals such as inspectors or quality control evaluators. Include a breakdown by room or bay, when appropriate. Do not show people assigned to explosives storage locations, AECPAs, or CAPAs.

Columns 5 through 6.
1. For a PES, provide the NEWQD for all HDs (HD 1.2.3, 1.5 and 1.6 may be omitted unless quantities will be present). Include MCE for HD 1.2.1 in Column 6. Include LSRN and parenthetical fragment distance for HD 1.2.3 in Column 6. For HD 1.4 show “Capacity” or “MEQ” in Column 5. If no explosives in a particular HD will be present, type “None” in Column 5. For multiple room facilities, show values for each room where explosives will be present. Where IM is not provided between rooms or cubicles, show overall values for the facility. If explosives are unpackaged see Section 3C. The explosive authorization must always show the sited, waived, or exempted weights, whichever is greater.

2. For an ES, type “None” in Column 5 for each HD.

Section III – PES/ES Information

Columns 1 through 6.

1. Provide the same data as described for Columns 1 through 6 in section 2.

2. For PES ESPs, identify all ESs and PESs within the IB distance, and all PESs within the evaluation zone (EZ) if it is larger than the IB distance.

3. For ES ESPs, identify all PESs within the EZ. For some ES ESPs, it may not be necessary to identify all PESs; for example, unmanned miscellaneous structures requiring 50 feet separation from any PES can be sited by merely identifying the nearest PES.

4. If exceptions are involved, provide the exception identification number per paragraph 14.22.6 in Column 10.

Column 7. Identify the actual separation between facilities listed in Column 2, sections 2 and 3.

Column 8. Identify the most restrictive (greatest) separation distance required between the facility listed in column 2, sections 2 and 3. If both facilities are PESs, perform a two-way evaluation between the pair and document the most restrictive distance. For exposures requiring only 50’ min or no QD separation distance, use a one-line entry.

Column 9. Identify the applicable Chapter 12 Table Column/Line and applicable notes used to obtain the distance in Column 8. If there is a specific facility or situation that is not listed in the Applicable Chapter 12 table use Section 12O-*QD Criteria Specific Facilities and Systems*.

Figure 14.3. AF Form 943.

EXPLOSIVES SITE PLAN		
SECTION I - GENERAL INFORMATION		
ACTION NUMBER ATC-LOWRY-10-S001 WITH EXCEPTIONS	**BASE/LOCATION** Lowry AFB, CO	**DATE** Jul 29, 2010

SECTION II - SITE DATA

SITE INFORMATION

FAC NO. **1**	**FACILITY/OPERATION DESCRIPTION** **2**	**OWNING *MAJCOM/UNIT*** **3**	**No. of People** **4**	**SITED NEWQD** **5**	**(xx) HC/DMCE/LSRN** **6**	**REMARKS** **7**
433	Aboveground Magazine Mag, Aboveground, Open	ATC-461 MUNS	0M 0C	2,500 800 125,000 125,000 125,000 Capacity	1.1 1.2.1≤99 1.2.2 (06)1.2.3≤450 1.3 1.4	

SECTION III - PES/ES Q-D PAIRED RELATIONSHIPS WITH FACILITY/LOCATION BEING SITED

FAC NO. **1**	**FACILITY/OPERATION DESCRIPTION** **2**	**OWNING *MAJCOM/UNIT*** **3**	**No. of People** **4**	**SITED NEWQD** **5**	**(xx) HC/DMCE/LSRN** **6**	**DIST *ACT*** **7**	**DIST RQD** **8**	**SEP FACTOR** *Table/Para* **9**	**REMARKS** **10**
462A	Inhabited Building Field Office, Explosives Area	ATC-461 MUNS	10M 0C	None None None None None None	1.1 1.2.1 1.2.2 1.2.3 1.3 1.4	582'	245' 239' 226' 216' 220' 50'	T12.1 T12.2 T12.2 T12.2 T12.3 T12.3	
462PK1	GOV Parking ORG PARK SURFAC	ATC-461 MUNS	0M 0C	None None None None None None	1.1 1.2.1 1.2.2 1.2.3 1.3 1.4	642'	100' 100' 100' 100' 100' 100'	T12.1n12 T12.2n1 T12.2n1 T12.2n1 T12.3n1 T12.3n1	
463	Operating Location Inspection Facility,Explosives	ATC-461 MUNS	20M 0C	7,000 4,400 500,000 500,000 400,000 MEQ	1.1 1.2.1≤216 1.2.2 (09)1.2.3≤216 1.3 1.4	726'	245' 300' 226' 216' 340' 50'	>T12.1 <T12.2 >T12.2 >T12.2 <T12.3n13 =T12.3	

463A	Inhabited Building Field Office, Explosives Area	ATC-461 MUNS	10M 0C	None None None None None None	1.1 1.2.1 1.2.2 1.2.3 1.3 1.4	756'	245' 239' 226' 216' 220' 50'	T12.1 T12.2 T12.2 T12.2 T12.3 T12.3	
465	Operating Location Bomb Buildup Area	ATC-461 MUNS	10M 0C	50,000 20,000 174,000 500,000 160,000 MEQ	1.1 1.2.1≤99 1.2.2 (12)1.2.3≤403 1.3 1.4	241'	245' 239' 226' 216' 240' 50'	>T12.1V >T12.2 >T12.2 >T12.2 <T12.3n13 =T12.3	**NAF-LOWRY-10-E01**
465A	WRM Storage, Structure STORAGE	ATC-461 MUNS	0M 0C	None None None None None None	1.1 1.2.1 1.2.2 1.2.3 1.3 1.4	216'	245' 239' 226' 216' 220' 50'	T12.1n12V T12.2n1V T12.2n1V T12.2n1 T12.3n1V T12.3n1	**ATC-LOWRY-10-E01**
465B	WRM Storage, Structure STORAGE	ATC-461 MUNS	0M 0C	None None None None None None	1.1 1.2.1 1.2.2 1.2.3 1.3 1.4	359'	245' 239' 226' 216' 220' 50'	T12.1n12 T12.2n1 T12.2n1 T12.2n1 T12.3n1 T12.3n1	

Table 14.1. Evaluation Zones for Exposed Sites. [1, 2]

Exposed Site	Evaluation Zone	Evaluation Zone
Earth Covered Magazine	874	K-11
Above Ground Magazine	874	K-11
Barricaded Module	874	K-11
Operating Location	1429	K-18
Remote Operating Location	1429	K-18
Combat Aircraft Parking Area	2382	K-30
Aircraft Explosives Cargo Parking Area	2382	K-30
Flightline Munitions Holding Area	874	K-11
Hardened Aircraft Shelter	1429	K-18
Defensive Missile Battery	874	K-11
Airfield Military Use Only Runway	2382	K-30
Airfield Military Use Only Taxiway	2382	K-30
Airfield Joint, Military/Non Military Use Runway	3969[(4)]	K-50[(4)]
Airfield Joint, Military/Non Military Use Taxiway	2382	K-30
Non-Explosives Loaded Aircraft	3969	K-50
Passenger Load/Unload Area	2382	K-30
Facilities For Combat Aircraft Alert Forces	1429	K-18
Above Ground Utilities	2382	K-30
Underground Utilities	239	K-3
Above Ground Bulk POL Facilities	3969[(4)]	K-50[(4)]
Public Traffic Route	2382	K-30
Recreation Area/Facility	2382	K-30
Related Facility	1429[(3)]	K-18[(3)]
Inhabited Building	3969[(4)]	K-50[(4)]

NOTES:

1. Evaluation zones shown are based on 500,000 pounds NEWQD at the applicable K factor for the paired relationship. Smaller evaluation zones may be used based on the largest amount of HD 1.1 authorized in a single PES on the installation or within the established clear zone. For other HDs, use the prescribed distances found in the appropriate QD tables.
2. Evaluation zones that are smaller than the IB clear zone of the PES being sited have no effect because all the facilities within that IB zone are already listed.
3. Related facilities being evaluated may not be related to the PES on which the EZ was determined. In addition to the PESs in the evaluation zone, list those PESs that have an IB relationship to the ES.
4. Evaluation zones for IB targets are used only to determine if an ESP is required. Only prepare an ESP for ESs requiring IB distance from all PESs if they are located within an explosives clear zone

Figure 14.4. Sample Site Location Map.

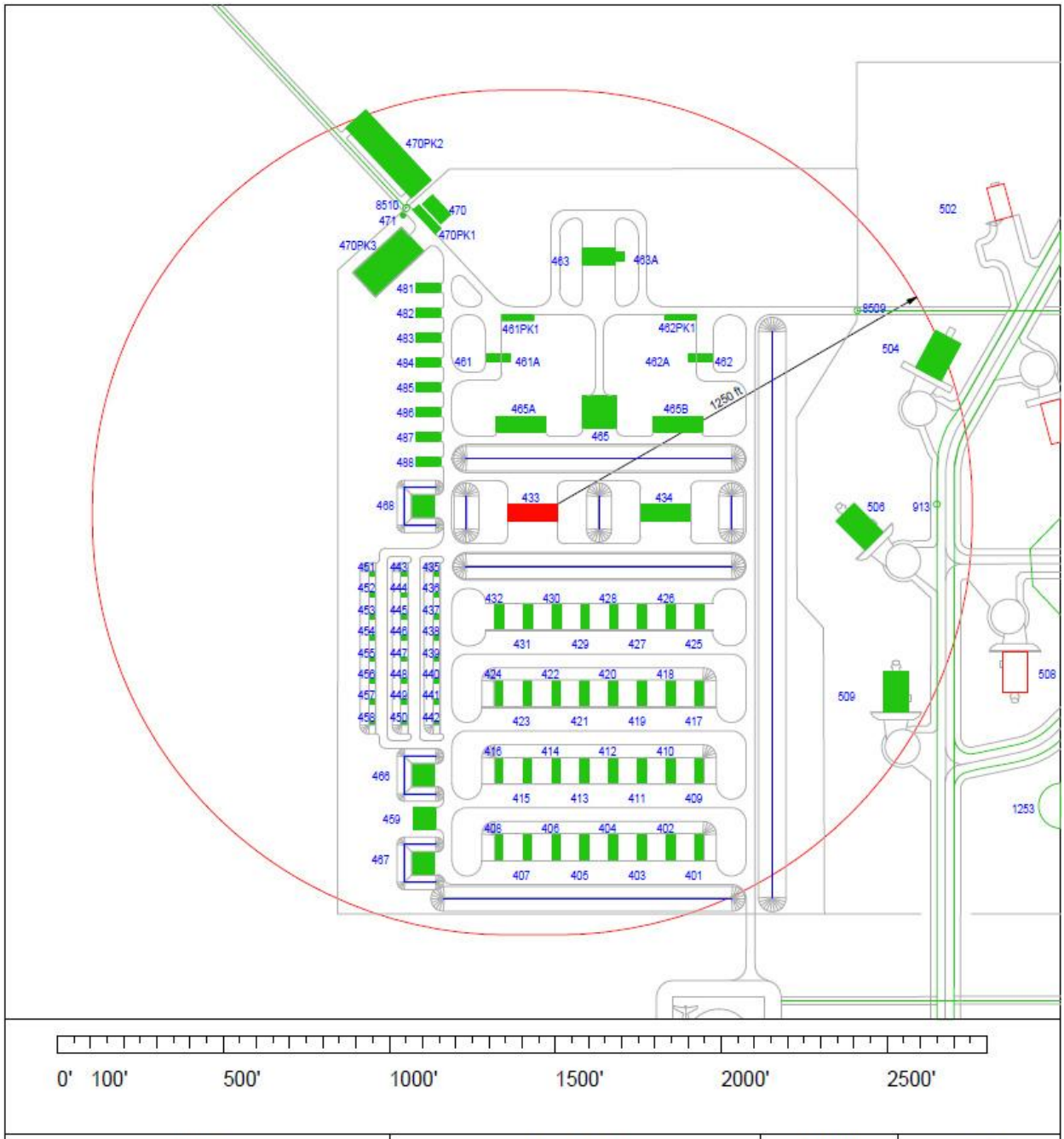

Title	Legend	NEW	HC/D
Explosives Site Plan	= PES	2,500	1.1
Lowry AFB, CO	= ES	800	1.2.1<=99
ATC-LOWRY-10-S001	N/A = Eval Zone <= IBD	125,000	1.2.2
STORAGE PAD	= IBD Clear Zone	125,000	(06)1.2.3<=450
Facility # 433		125,000	1.3
		Capacity	1.4

Chapter 15

REAL PROPERTY KNOWN OR SUSPECTED TO CONTAIN MUNITIONS AND EXPLOSIVES OF CONCERN AND CHEMICAL AGENTS

Section 15A—Introduction

15.1. General. Every means possible shall be used to protect the general public and the environment from exposure to ammunition and explosive hazards. This includes all explosive hazard areas, suspected or known to exist, on real property currently or formerly under USAF ownership or control.

15.1.1. This chapter establishes explosives safety standards that, when applied, will protect people and real property from explosive and CA hazards associated with:

15.1.1.1. Real property known or suspected to contain:

15.1.1.1.1. Munitions and explosives of concern (MEC).

15.1.1.1.2. CA in other than munitions configurations (e.g., DoD laboratory vials, CA identification sets, one-ton containers, CA-contaminated soil).

15.1.1.2. Munitions responses to MEC. (A munitions response to CA-filled munitions will be addressed as a chemical warfare material (CWM) response.)

15.1.1.3. CWM responses

15.1.2. This chapter establishes a process for determining site-specific actions that, when taken, will:

15.1.2.1. Ensure explosives safety is addressed throughout munitions responses to MEC.

15.1.2.2. Ensure CA safety and, when applicable, explosives safety is addressed throughout CWM responses.

15.1.2.3. Result in DDESB approval of required safety submissions for munitions responses to MEC and for CWM responses. (See section 15.5 for required safety submission and their contents.)

15.1.2.4. Document and report completion of:

15.1.2.4.1. Munitions responses to MEC

15.1.2.4.2. CWM responses.

15.1.3. This chapter does not apply to:

15.1.3.1. Operational ranges, with the exception of military munitions burial sites located on such ranges.

15.1.3.2. Explosives or munitions emergency responses.

Section 15B—Explosives Safety Standards for the Identification and Control of Areas Known or Suspected to Contain MEC or CA

15.2. Identification and Control. To ensure explosives and CA safety risk is identified and controlled on real property currently or formerly under the jurisdiction, custody, or control of the USAF, installations must:

15.2.1. Identify all areas known or suspected to present explosive or CA hazards (Geographic Information Systems should be used):

15.2.1.1. In installation master plans for active installations. (In some cases, these areas are also required to be identified in other documents.)

15.2.1.2. In DoD's military Munitions Response Site Inventory for those sites that are included in the Military Munitions Response Program (see Management Guidance for the Defense Environmental Restoration Program (DERP) and 10 U.S.C. 2710(a).

15.2.2. Maintain permanent records of those areas identified pursuant to subparagraph 15.2.1. and ensure such records are readily available to current and futures users of the property. Records should be retained for areas such as operational ranges, former ranges, current or former munitions manufacturing facilities, current or former sites used for munitions demilitarization activities, and locations previously used for the burial of munitions. Records shall:

15.2.2.1. When practicable, include the nomenclature and the known or suspected location.

15.2.2.2. Summarize any clearance or response (removal or remediation) actions, or explosives or munitions emergency responses previously conducted within the area.

15.2.3. Prohibit unnecessary access and take appropriate action to deter unauthorized access to areas under DoD control that are known or suspected of containing potential explosive or CA hazards. Such actions may include establishing access controls (e.g. fencing the area, establishing roving security patrols), which may be risk-based, or providing public notifications of any potential hazards (e.g., posting unexploded ordnance (UXO)-hazard warning signs, conducting UXO-safety education programs). When used, signs must be kept legible and, when appropriate, in the predominant languages of the region, or as pictograms. When the DoD does not exercise jurisdiction, custody, or control over the area (e.g., Formerly Used Defense Sites (FUDS)), the responsible installation shall, at a minimum, provide written notification of the potential explosive or CA hazards to the property owner and any known tenants. A record of this notification must be maintained as a permanent record. (See subparagraph 15.2.2.)

15.2.3.1. Installations should, unless there is evidence to the contrary, assume the following areas present explosive hazards:

15.2.3.1.1. Impact areas on operational ranges. Exceptions are ranges known to have been exclusively used for training with only small arms ammunition.

15.2.3.1.2. Former ranges known or suspected to contain MEC.

15.2.3.1.3. Outdoor demolition areas, to include locations used for open burning (OB) or open detonation (OD).

15.2.3.1.4. Areas that are associated with military munitions production, demilitarization, renovation, or similar processes (e.g., operating buildings and any installed equipment) that generated explosives residues (e.g., dust, vapors, liquids) and that might have become contaminated with such residues in concentrations sufficient to present explosive hazards, to include areas receiving processing wastewater (e.g., settling ponds, drainage swales).

15.2.3.2. Installations should, unless there is evidence to the contrary, assume the following areas present CA hazards:

15.2.3.2.1. Former CWM or CA burial sites.

15.2.3.2.2. Former CWM or CA disposal areas.

15.2.3.2.3. Former CWM impact areas.

15.2.3.2.4. Former training areas used for training with CWM or CA.

15.2.3.2.5. Former CWM or CA production and demilitarization facilities.

15.2.3.3. When access to areas known or suspected to present explosive or CA hazards is necessary, a risk assessment to evaluate the potential hazards associated with the proposed activity shall be completed and methods to mitigate any potential exposures shall be implemented before access is allowed. (When access is necessary to real property not under DoD ownership, custody, or control, installations should obtain a right of entry for the property.)

15.2.4. Prohibit the disposal (e.g., burying, dumping) of military munitions on land or in water except when specifically authorized by the appropriate MAJCOM in coordination with AFSC/SEW. Such disposal actions must comply with applicable regulatory requirements. This prohibition does not preclude:

15.2.4.1. The covering of munitions with earth to control fragments and noise during authorized destruction by detonation.

15.2.4.2. The use of *in situ* capping when implemented as an engineered remedy under an authorized response action.

Section 15C—Safety Aspects of Explosives and CA Response Actions

15.3. Response Actions

15.3.1. General

15.3.1.1. Plans for munitions responses to MEC or CWM responses shall:

15.3.1.1.1. Ensure close coordination, as applicable, between DoD explosives and CA safety organizations, DoD environmental organizations, and appropriate regulatory agencies and stakeholders.

15.3.1.1.2. Specify those actions necessary to protect DoD personnel, installation-related personnel, and the public from exposure to explosive and CA hazards.

15.3.1.1.3. Provide the design for and explain the execution of:

15.3.1.1.3.1. Munitions responses, when MEC has been determined to present an

unacceptable risk.

15.3.1.1.3.2. CWM responses, when CA, regardless of configuration, has been determined to present an unacceptable risk.

15.3.1.1.4. Explain how the selected response actions will achieve a degree of protectiveness necessary for the current, determined, or reasonably anticipated future land use.

15.3.1.1.4.1. Provide the rationale for selection of technologies to be used to detect anomalies that can indicate the presence of MEC or CA, regardless of CA configuration.

15.3.1.1.4.2. Address how periodically (e.g., during 5-year reviews or consistent with long-term monitoring agreements) completed response actions will be reviewed to ensure the response remains effective. The need for such reviews is particularly important in areas where natural phenomena (e.g., frost heave, soil erosion, droughts, or tidal action) could expose MEC or CA, regardless of CA configuration, or where Land Use Controls (LUC) constitute a major element of the response. These reviews shall consider:

15.3.1.1.4.2.1. The explosives safety aspects of munitions responses to MEC.

15.3.1.1.4.2.2. The CA safety and, when applicable, the explosives safety aspects of CWM responses.

15.3.1.1.5. Address how the personnel qualification provisions of DDESB TP 18 will be met.

15.3.1.1.6. Be approved by the DDESB for compliance with DoD explosives safety standards.

15.3.1.1.7. Provide for the submission of an After Action Report (AAR) to the DDESB upon completion of the response. AAR are not provided for DDESB approval, but are used to close out files maintained by the DDESB Staff.

15.3.1.2. Residual Explosive and CA Hazards.

15.3.1.2.1. Some areas that the military has used for munitions-related activities (e.g., live-fire training or testing, OB/OD) or for CA-related activities may not be appropriate, even after the performance of response activities, for certain uses (e.g., residential development). Such areas include former military range impact areas on which the military has used munitions containing either high explosives or CA and sites used for either OB or OD. Such areas may, after a response, be better suited for uses that restrict or limit intrusive activities (e.g., wildlife refuges, surface recreational areas).

15.3.1.2.2. Some MEC or CA, regardless of CA configuration, might not be detected or removed during a response. Although residual risks can be managed (e.g., by use of agreed-upon LUC, to include safety education; recurring reviews; and construction support), residual hazards might still exist.

15.3.1.2.3. From an explosives and, when applicable, CA safety perspective, the degree to which MEC or CA removal is undertaken depends largely on the current,

determined, or reasonably anticipated future land use. When MEC or CA, regardless of CA configuration, cannot be removed to the degree necessary to safely allow the current, determined, or reasonably anticipated future land use, the use must be changed or appropriately restricted to obtain DDESB approval of the relevant plan.

15.3.1.3. When DoD does not control the land and the imposition of LUC is not possible (e.g., on FUDS), the responsible installation should, at a minimum, provide the property owner, and any known tenants, written notification of the potential residual explosive or CA hazards and the risks inherent in any use of property that is consistent with those hazards.

15.3.2. Explosives Safety and CA Safety Aspects in the Selection and Design of Responses

15.3.2.1. Explosives safety must be addressed in the selection and design of a munitions response to MEC. CA safety, and when applicable, explosives safety must be addressed in the selection and design of a CWM response. The protection afforded by a response must be consistent with the current, determined, or reasonably anticipated land use. The design of the response that is included in the required submission must consider the site-specific information below.

15.3.2.1.1. Historical Information. Historical information, which is documented in a written report, is gathered through a records search, to include the permanent records outlined in section 5.2., and interviews. The following information is required:

15.3.2.1.1.1. The boundaries of the response area. For munitions responses, the Munitions Response Area (MRA) boundaries and, when appropriate, the boundaries of any Munitions Response Sites (MRS) (e.g., firing points, impact areas, and burial sites) within the MRA are required.

15.3.2.1.1.2. The type of MEC known or suspected to be present based on the types of munitions-related operations, training, or testing previously performed in the MRA or MRS.

15.3.2.1.1.3. The type and configuration of any CA known or suspected to be present.

15.3.2.1.2. Land Use. Land use is the current, determined, or reasonably anticipated future use of real property. Because portions of the response area (e.g., the MRA or MRS) might be used differently (e.g., public highway, wildlife refuge, sports field, industrial complex), different response actions (e.g., surface removal, subsurface removal, no removal, remedial response) may be appropriate within any given response area.

15.3.2.1.2.1. Where the land use is limited to surface activities, the munitions or CWM response may only involve removing surface MEC or surface CA. This removal may be technology-aided.

15.3.2.1.2.2. When the land use will involve or allow intrusive activities to occur, the response will normally require a subsurface removal, and may require follow-on construction support.

15.3.2.1.2.3. Where the current, determined, or reasonably anticipated land use is compatible with the explosive or CA hazards present or suspected, a response

action to remove any explosive or CA hazards may not be necessary.

15.3.2.1.2.4. Where a response would adversely impact natural or cultural resources, a removal action may not be practical.

15.3.2.1.3. Results of Onsite Investigations. These results should be used to validate and augment information discovered during the historical review and to determine the specific boundaries of the response area (e.g., the boundary of an MRA or of any MRS within an MRA).

15.3.2.1.4. Analysis. Conduct a detailed analysis of available records, technical data, and the results of onsite investigations. This analysis should evaluate:

15.3.2.1.4.1. The types of MEC or CA, regardless of CA configuration, known to be present, to include its technical characteristics (e.g., filler, fuzing) and estimated distribution.

15.3.2.1.4.2. The potential explosive or CA hazards present.

15.3.2.1.4.3. Physical site characteristics (e.g., flora and fauna, endangered species, cultural items, geological, topographical, hydrological).

15.3.2.1.4.4. People potentially endangered.

15.3.2.1.4.5. Information from previous or current responses.

15.3.2.1.5. LUC. Evaluate the appropriateness and effectiveness of LUC to manage any residual explosives safety or CA safety risks.

15.3.2.1.6. Technology. Evaluate the applicability, capabilities, and limitations of available technologies (e.g., detection, discrimination, removal).

15.3.2.1.7. Other relevant factors.

Section 15D—Special Considerations

15.4. General

15.4.1. **Explosive Soil**

15.4.1.1. Because of some past munitions-related activities (e.g., settling ponds or explosives sumps at munitions production or demilitarization facilities), concentrations of explosives in soil (e.g., sand, sludge, clay) can exist such that the mixture itself presents an explosive hazard. Such mixtures are referred to as “explosive soil.”

15.4.1.2. The NEWQD of explosive soil is the weight of the mixture multiplied by the explosives concentration (e.g., 1,000 lbs [454 kg] of explosive soil that is 10 percent TNT has an NEWQD of 100 lbs [45.4 kg]).

15.4.1.3. The concentration necessary to present an explosive hazard depends on the distribution and type of explosives in the soil and the soil’s characteristics.

15.4.1.3.1. Primary (Initiating) Explosives

15.4.1.3.1.1. Soil containing 2 percent or more by weight of any primary explosive or mixture of primary explosives presents an explosive hazard and shall

be treated as HD 1.1.

15.4.1.3.1.2. Soil containing less than 2 percent by weight of any primary explosive does not present an explosive hazard.

15.4.1.3.2. Secondary Explosives.

15.4.1.3.2.1. Secondary explosives are much less sensitive than primary explosives.

15.4.1.3.2.2. Soil containing 10 percent or more of weight of either any secondary explosives or a mixture of secondary explosives presents an explosive hazard and shall be treated as HD 1.1.

15.4.1.3.2.3. Soil containing less than 10 percent by weight of any secondary explosive or a mixture of secondary explosives does not present an explosive hazard.

15.4.1.3.3. Nitroglycerin, Nitrocellulose, and Nitroguanidine

15.4.1.3.3.1. Soil containing 10 percent or more by weight of nitroglycerine, nitrocellulose, or nitroguanidine presents an explosive hazard and shall be treated as HD 1.1.

15.4.1.3.3.2. Soil containing less than 10 percent by weight of nitroglycerin, nitrocellulose, or nitroguanidine does not present an explosive hazard. (Care must be taken when applying this threshold rule to less-permeable soils, such as clay, that may cause nitroglycerin to pool, rather than be absorbed.)

15.4.1.3.4. Other Energetic Materials Mixtures. The potential explosive hazard of such mixtures in soil may be unknown and may require testing. If the hazard is unknown, manage soil mixtures containing only propellants as secondary explosives, and all other soil mixtures containing energetics (e.g., liquid propellants) as primary explosives.

15.4.2. Real Property (Buildings and Installed Equipment). Military munitions operating buildings (e.g., munitions production or demilitarization facilities) and any installed equipment may contain residual explosives that present an explosive hazard. Of particular concern are building features (e.g., floors, roofs, walls, drains, internal and external piping, ventilation systems) in which explosives residues could present explosive hazards and industrial equipment, particularly equipment with internal cavities from facilities used in munitions production or demilitarization operations (e.g., cast loading or milling, steam-out) that generated explosives residues (e.g., dust, vapors, liquids). To the extent such buildings or installed equipment is believed to present an explosive or CA hazard, installations, in coordination with MAJCOM and AFSC/SEW, must submit to the DDESB for use of such buildings and installed equipment before use or transfer for purpose incompatible with the presence of the explosive hazard (see DoD 6055.09-M, Volume 7, for additional information).

15.4.3. **Construction Support**

15.4.3.1. Responsible installations should consider the level of construction support required, based on site-specific data, during the below activities.

15.4.3.1.1. Intrusive activities (e.g., building construction, laying utilities, or road improvements) on property known or suspected to contain MEC or CA, regardless of CA configuration, or on property where residual explosive or CA hazards may exist.

15.4.3.1.2. The removal or remediation of debris or media in areas where there is a probability of encountering MEC (e.g., former OB/OD grounds) or CA.

15.4.3.2. The responsible authority (e.g., installation commander or designated representative) will determine whether such support is required and the level of effort of required support on a case-by-case basis (see subparagraph 15.5.7). Construction support is determined by the probability of encountering MEC or CA, regardless of CA configuration.

15.4.3.2.1. Low Probability. "On-call" construction support is appropriate

15.4.3.2.1.1. A "low" determination may only be assigned to those areas for which a search of available historical records and onsite investigation data indicates that, given the military or munitions-related activities that occurred at the site, the likelihood of encountering MEC or CA, regardless of CA configuration, is low.

15.4.3.2.1.2. Munitions-related activities that may merit a "low" determination include, but are not limited to, the former use of the area for live-fire training exclusively with small arms ammunition; for maneuver training, to include maneuver training involving the use of smokes, pyrotechnics, and simulators; as firing points; for munitions inspection, handling, storage, or transfers, to include residue points and inert storage yards; for air defense; or as munitions operating facilities. The exceptions are facilities in which the processes used might have resulted in the generation of concentrations of munitions constituents high enough to present an explosive hazard. Areas on which previous responses have been completed may also qualify for "low" determinations.

15.4.3.2.1.3. Immediate reassessment by the responsibility authority of the level of construction support required is appropriate upon the discovery of MEC or CA, regardless of CA configuration.

15.4.3.2.2. Moderate to High Probability. "Onsite" construction support should be provided to remove explosive or CA hazards in the construction footprint, per a DDESB-approved ESS or CSS, before intrusive construction or other intrusive activities occur. (NOTE: When the depth of intrusive activities exceeds the detection limits of the detection equipment used, soil should be removed in layers to allow detection and removal of MEC or CA, regardless of CA configuration, in the construction footprint.)

15.4.3.2.2.1. A "moderate to high" determination may be assigned to those areas for which a search of available historical records or onsite investigation data indicates that, given the military or munitions-related activities that occurred at the site, there is more than a low probability that MEC or CA are present.

15.4.3.2.2.2. Munitions-related activities that may merit a "moderate to high" determination include, but are not limited to, the former use of the area for live-

fire training other than exclusively with small arms ammunition; as operational range impact areas; for OB or OD of munitions; as munitions operating facilities where processes used might have resulted in the generation of concentrations of munitions constituents high enough to present an explosive hazard; for munitions burial; or for any activities involving CA.

15.4.4. **Anomaly Avoidance**

15.4.4.1. The use of anomaly avoidance techniques is appropriate on properties known or suspected to contain UXO or other munitions (e.g., Discarded Military Munitions (DMM)) that may have experienced abnormal environments to allow the below activities in such areas while avoiding surface explosive or CA hazards and, when necessary, subsurface anomalies. Anomaly avoidance is used when:

15.4.4.1.1. Surface MEC or CA, regardless of CA configuration, will be avoided during any activities that require entry to the area (e.g., collections of environmental samples, the conduct of cultural resource studies).

15.4.4.1.2. Subsurface anomalies will be avoided during any intrusive work (e.g., drilling environmental monitory wells).

15.4.4.2. During anomaly avoidance:

15.4.4.2.1. Escort support must be provided by EOD personnel, or:

15.4.4.2.1.1. Within areas known or suspected to contain MEC, excluding CA, regardless of configuration, by UXO-qualified personnel as outlined in DDESB TP 18.

15.4.4.2.1.2. Within areas known or suspected to contain CA, regardless of configuration, to include areas where such CA is commingled with other MEC, by UXO-qualified personnel trained in CWM responses.

15.4.4.2.2. Explosives safety requires that discovered surface MEC or CA, regardless of CA configuration, be avoided and their location noted and reported to appropriate authorities.

15.4.4.2.3. Detected subsurface anomalies must not be investigated, but they shall be marked, when appropriate, and avoided.

15.4.5. Frost Heave. This phenomenon occurs when three conditions are met: (a) freezing temperatures are present in the soil column; (b) the soil is frost susceptible; and (c) there is sufficient moisture present in the soil to cause soil movement upon ice crystal formation. These three factors will be evaluated to assess the likelihood of frost heave moving residual MEC or CA, regardless of CA configuration, upward through the soil column. Where frost heave may have such an effect, explosives safety requires procedures be implemented to monitor the effectiveness of response actions for the affected area. (Other naturally occurring phenomena (e.g., erosion, tidal changes) could necessitate similar monitoring.)

15.4.6. **Soil Containing CA**

15.4.6.1. The criteria below apply to soil known to be contaminated with one or more of the following CA: mustard, L, GD, GA/GB, O-cyclohexyl Methylphosphono-flouridate (GF) (common name is cylcosarin), or VX. This criteria applies only if a headspace

measurement is at or above the Short Term Exposure Limits (STEL) (see subparagraph 15.4.6.4.1.) or a laboratory extraction sample is at or above the Hazardous Waste Control Limit (HWCL) for solid materials: mustard, L, GD, GA/GB, GF, or VX. Certain CA-related operations, such as taking core samples at a suspect CWM or CA burial site, require laboratory extraction sampling.

15.4.6.2. Soil for which no evidence exists of CA contamination does not require treatment or remediation.

15.4.6.3. An appendix to the site's Site Safety and Health Plan that addresses the procedures (e.g., personnel protection, monitoring, sampling, packaging, disposal) for the handling and disposition of CA-contaminated soil is required for environmental responses to soil known or suspected to be contaminated with CA.

15.4.6.4. Air-sampling methods will be used to detect CA during CWM responses. When soil contaminated with CA is encountered and an air concentration is at or above the STEL based on off-gas monitoring of the headspace of a container or of air in the immediate area of the operation, appropriate personnel protective measures shall be employed and the CA-contaminated soil shall be decontaminated to below the HWCL levels of subparagraph 15.4.6.4.2. unless the CA-contaminated soil may be shipped per DOT regulations and approvals and a receiving Treatment Storage Disposal Facility (TSDF) is qualified to process the CA-contaminated soil per Federal, State, interstate, and local laws and regulations. If air monitoring is below the STEL, soil samples will be taken to determine if the soil exceeds the HWCL.

15.4.6.4.1. The STELs for air sampling CA contamination are:

15.4.6.4.1.1. 0.003 milligrams per cubic meter (mg/m^3) for mustard (H, HD, or HT) agent.

15.4.6.4.1.2. 0.003 mg/m^3 for L.

15.4.6.4.1.3. 0.0002 mg/m^3 for GD/GF.

15.4.6.4.1.4. 0.0001 mg/m^3 for GA/GB.

15.4.6.4.1.5. 0.00001 mg/m^3 for VX.

15.4.6.4.2. When soil contaminated with CA is encountered at or above the HWCL levels listed in Table 15.1. as determined by laboratory extraction and analysis of soil samples, the CA-contaminated soil shall be decontaminated to below the levels listed for HWCL, or to a level required by Federal, State, interstate, and local laws and regulations.

Table 15.1. Hazardous Waste Control Limits (HWCL)

Standard Name	Population	Exposure Scenario	Chemical Agent per Soil Mass (mg/kg)					
			GD/GF	GA	GB	VX	H, HD & HT	L
HWCL	Worker (Civilian/DoD)	Possible occasional exposure at hazardous waste treatment facility	52	680	320	10	6.7	37

15.4.6.5. Once decontaminated to the appropriate level, the CA-contaminated waste must be packaged in a DOT-approved shipping container and shipped to an approved, licensed treatment or disposal facility per Federal, State, and local laws and regulations. Records of disposition must be maintained by the generator per Federal, State, interstate, and local laws and regulations, managed in accordance with AFMAN 33-363 and disposed of in accordance with the AF Records Disposition Schedule.

15.4.6.6. Soil that is found to be below the HWCL, but above the levels of subparagraph 15.4.6.7., shall be disposed of as hazardous waste per Federal, State, interstate, and local laws and regulations or treated by an approved, licensed treatment or disposal facility to the levels of subparagraph 15.4.6.7.

15.4.6.7. Soil that is at or below the Health-Based Environmental Screening Levels (HBESL) for residential or industrial soil listed in Table 15.2, as appropriate, may be used or disposed of per Federal, State, interstate, and local laws and regulations (e.g., returned to the hole or disposed of as non-contaminated, non-hazardous material.

Table 15.2. Health-Based Environmental Screening Levels (HBESL)

Standard Name	Population	Exposure Scenario	Chemical Agent per Soil Mass (mg/kg)					
			GD/GF	GA	GB	VX	H, HD & HT	L
HBESL-Residential	General Population (adults and children)	Daily Exposure (lifetime)	0.22	2.8	1.3	0.042	0.01	0.3
HBESL-Industrial	General Adult Population	Frequent Exposures (250 days per year for 30 years)	5.2	68	32	1.1	0.3	3.7

Section 15E—Required Safety Submissions (ESS, CSS and Explosives or CWM Site Plans)

15.5. General. Plans for leasing, transferring, or disposing of USAF real property (see AFI 32-9004) when ammunition and explosives are present, or are suspected to be present, will be submitted through command safety channels to AFSC/SEW, for submission to the DDESB for review and approval.

15.5. (ACC)General. Submit explosives safety submissions through command channels to HQ ACC/SEW for processing.

15.5.1. Explosives and CA safety requires:

15.5.1.1. A DDESB-approved site plan, ESS, or CSS before the start of munitions response activities (e.g., field activities) that involve the placement of explosives on a site; the intentional physical contact with MEC or CA, regardless of CA configuration; or the conduct of ground-disturbing or other intrusive activities in areas known or suspected to contain MEC or CA, regardless of CA configuration; or

15.5.1.2. An AFSC/SEW review and approval pending DDESB review and approval of the submission, provided the submission is at the DDESB for review and approval and the submitting MAJCOM understands that DDESB approval may impose different or additional munitions or CWM response requirements.

15.5.2. A DDESB-approved ESS or CSS, or an explosives or CWM site plan, or a combination thereof, is required for:

15.5.2.1. MRS investigation or characterization (e.g., Engineering Evaluation/Cost Analysis (EE/CA) or Remedial Investigation/Feasibility Study (RI/FS)) that involve the intentional physical contact with MEC or CA, regardless of CA configuration (see subparagraph 15.5.4.).

15.5.2.2. A determination of “No DoD Action Indicated” (NDAI) or “No Further Action” (NOFA) (see subparagraph 15.5.5).

15.5.2.3. Time Critical Removal Action (TCRA) (see **subparagraph** 15.5.6.).

15.5.2.4. Construction support (see **subparagraph** 15.5.7.).

15.5.2.5. Execution of the explosives safety or CA safety aspects of the selected response (see subparagraphs 15.5.8. and 15.5.9).

15.5.3. A DDESB-approved ESS or CSS, or an explosives or CWM site plan is not required for:

15.5.3.1. Munitions or explosives emergency responses.

15.5.3.2. Preliminary assessments or site inspections (e.g., site visits in conjunction with an archival search) when intentional physical contact with MEC or CA, regardless of CA configuration, or the conduct of ground-disturbing or other intrusive activities are not intended (see subparagraph 15.5.3.6.)

15.5.3.3. Clearance activities on operational ranges. (Addressing military munitions burial sites on operational ranges is not a clearance activity.)

15.5.3.4. Munitions responses on former ranges used exclusively for training with small arms ammunition.

15.5.3.5. On-call construction support

15.5.3.6. Anomaly avoidance activities

15.5.4. MRS Investigation or Characterization. An explosives or, when appropriate, a CWM site plan is required for MRS investigations or characterizations that involve intentional physical contact with MEC or CA, regardless of CA configuration. Such site plans will address areas (e.g., magazines) used for the storage of commercial or military demolition explosives, MEC or CA, regardless of CA configuration; planned or established demolition or disposal areas; and the MRA, MRS, or response area boundaries. (See subparagraph 15.5.8.3.7.) MRS investigation and characterization are used to collect the information needed to design the required munitions response and to prepare, as appropriate, an ESS or CSS for the selected response.

15.5.5. NDAI or NOFA ESS or CSS. When a NDAI or NOFA decision is made for an MRA or MRS or for a response area, an ESS or CSS must, at a minimum, provide:

15.5.5.1. The site identification (e.g., name, unique identifier).

15.5.5.2. The site location.

15.5.5.3. Justification for the decision.

15.5.6. TCRA ESS or CSS. To expedite the approval process, installations are encouraged to submit TCRA ESS or CSS electronically through their chain of command to the DDESB. A TCRA ESS or CSS must, at a minimum, identify or provide:

15.5.6.1. The site identification (e.g., name, unique identifier).

15.5.6.2. The TCRA's location.

15.5.6.3. The TCRA's purpose, in sufficient detail to explain the reason the TCRA was authorized.

15.5.6.4. The estimated date that the TCRA will be:

15.5.6.4.1. Initiated.

15.5.6.4.2. Completed.

15.5.6.5. The munitions item with the greatest fragmentation distance (MGFD)

15.5.6.6. ESQD maps (see subparagraph 15.5.8.3.7.) that show the minimum separation distances for:

15.5.6.6.1. The removal area within an MRA or MRS or within a response area for:

15.5.6.6.1.1. Unintentional detonations (see subparagraph 15.5.8.3.2.1.).

15.5.6.6.1.2. Intentional detonations (see subparagraph 15.5.8.3.2.2.).

15.5.6.6.2. Areas or magazines for the storage of demolition explosives, MEC, or CA, regardless of CA configuration.

15.5.6.7. Actions and controls to be implemented (e.g., surface removal, evacuation, fences) as part of the TCRA.

15.5.6.8. DDESB-approved engineering controls to be used, if any.

15.5.6.9. A point of contact for additional information

15.5.7. Construction support ESS or CSS. A safety submission is required for construction support where the probability of encountering MEC or CA, regardless of CA configuration, is considered moderately or highly probable. This submission must provide the information outlined in paragraphs 15.5.8. and 15.5.9., as appropriate. The information may be tailored based on site-specific conditions.

15.5.8. Selected Munitions Response ESS. The information below is required in an ESS for the execution of the selected munitions response to address MEC. When CA, regardless of configuration, is known or suspected to be present a long with explosive hazards, or when it is explosively configured, a submission that provides both explosives safety (as outlines in this section) and CA safety information (see **paragraph 15.5.9**.) is required.

15.5.8.1. Background. The ESS must provide, for informational purposes, a brief description of the reasons for the munitions response. The ESS must identify or provide:

15.5.8.1.1. The scope of munitions response activities.

15.5.8.1.2. Any significant differences in munitions response activities that will occur within the MRA or MRS. (NOTE: The ESS must identify significant differences in the current, determined, or reasonably anticipated future land use of different sections of the property, significant differences in the types or conditions of MEC expected to be encountered, and any sections of the MRA that will not require munitions response activities.)

15.5.8.2. Maps. The following maps and related information must be furnished:

15.5.8.2.1. Regional Map. A map depicting the regional location of the MRA or MRS (e.g., a state or boundary illustration map with the MRA indicated on it).

15.5.8.2.2. MRA or MRS Maps. Include maps of the area or areas at which the munitions response is planned. These maps and related information shall indicate:

15.5.8.2.2.1. Areas that:

15.5.8.2.2.1.1. Contain or are suspected of containing MEC that the ESS addresses

15.5.8.2.2.1.2. Were suspected of containing MEC, but that research or site characterizations have subsequently shown do not contain such.

15.5.8.2.2.1.3. The ESS does not address, but that either a previous safety submission addressed or a future safety submission will address.

15.5.8.2.2.2. The current, determined, or reasonably anticipated future land use of property within the MRA or MRS that is known or suspected to contain MEC that the ESS addresses.

15.5.8.2.2.3. The ownership and land use of adjacent properties, as appropriate.

15.5.8.2.2.4. Any other situation that may influence or require consideration during the response (e.g., flight corridors, traffic routes).

15.5.8.3. ESQD

15.5.8.3.1. The planned locations for MEC response-related operations must be shown on Explosives Safety Quantity Distance (ESQD) maps. (NOTE: Preliminary site work, such as surveying, laying search lanes, and detecting anomalies does not require establishment of an ESQD arc.)

15.5.8.3.2. ESQD arcs for both intentional and unintentional detonations must be established and shown on ESQD maps for each MRS.

15.5.8.3.2.1. The Minimum Separation Distance (MSD) for unintentional detonations, which may be reduced by employing DDESB-approved engineering controls, for:

15.5.8.3.2.1.1. Nonessential personnel is the greatest distance of:

15.5.8.3.2.1.1.1. Blast overpressure, as computed by using the formula: $D = 40W^{1/3}$.

15.5.8.3.2.1.1.2. The calculated HFD.

15.5.8.3.2.1.2. Team Separation distance (TSD) is based on blast overpressure, as computed by the formula: $D = 40W^{1/3}$.

15.5.8.3.2.2. The MSD for intentional detonations (see Chapter 12), which may be reduced by employing DDESB-approved engineering controls, is the greatest distance of:

15.5.8.3.2.2.1. Blast overpressure, as computed by using the formula: $D = 328W^{1/3}$.

15.5.8.3.2.2.2. The calculated Maximum Fragment Distance (MFD) (see chapter 12).

15.5.8.3.3. MEC, Excluding CA-filled Munitions, Hazard Classification, and Storage

15.5.8.3.3.1. Recovered MEC, other than Recovered CWM (RCWM), shall be managed as HD 1.1, unless assigned differently by an Interim Hazard Classification (IHC) authority, and assigned an appropriate CG. When storage at the MRA or MRS is necessary, recovered MEC must be stored separately from serviceable munitions and from any RCWM. (NOTE: For RCWM, see subparagraph 15.5.9.6.)

15.5.8.3.3.2. Nonessential personnel in structures shall be afforded protection equivalent to IBD from storage locations. Nonessential personnel in the open shall be afforded protection equivalent to Public Traffic Route Distance (PTRD) from storage locations. (See Chapter 12.) There is no required ESQD protection for essential personnel from locations they are using for storage.

15.5.8.3.3.3. The Intermagazine Distance (IMD), based on the Net Explosive Weight Quantity Distance (NEWQD) of the munition with the greatest NEWQD that is reasonably expected to be encountered, applies from intrusive operations to

storage sites to prevent propagation to a storage location in event of an accidental explosion during intrusive operations. For distances less than IMD, DDESB-approved engineering controls must be used during intrusive operations.

15.5.8.3.4. Planned or Established Demolition Areas. A planned or established demolition area is an area used repetitively to destroy munitions during a munitions response. (Such areas may be an existing OD area or a new area planned for intentional detonation.) An ESQD arc must be provided around demolition areas. The size of the ESQD arc will be based on requirements of this Manual (see Chapter 12).

15.5.8.3.5. Mechanized MEC Processing Operations, Excluding CA-filled Munitions

15.5.8.3.5.1. These processing operations can be classified as either "high input" or "low input" based on a risk assessment that considers the degree of energy with which the process would impact any MEC potentially processed.

15.5.8.3.5.1.1. High-input processing operations (e.g., shredders, crushers) are intended to physically deform material including any MEC being processed, and certain excavations depending upon the risk assessment.

15.5.8.3.5.1.2. Low-input processing operations (e.g., on-site transport, dumping, screening, raking, spreading, sifting, and magnetically separating) are not intended to intentionally deform material including MEC being processed, and certain excavations depending upon the risk assessment.

15.5.8.3.5.2. Personnel Separation Distances

15.5.8.3.5.2.1. Nonessential Personnel.

15.5.8.3.5.2.1.1. During high-input processing operations, nonessential personnel shall be provided protection for intentional detonations (see subparagraph 15.5.8.3.2.2.) based on the MGFD.

15.5.8.3.5.2.1.2. During low-input processing operations, nonessential personnel shall be provided protection for accidental (unintentional) detonations (greater of HFD or K40).

15.5.8.3.5.3. Essential Personnel. For both high- and low-input processing operations, essential personnel shall:

15.5.8.3.5.3.1. Be protected by shields or barricades designed to defeat hazardous fragments from the MGFD.

15.5.8.3.5.3.2. Be separated from the operation by K24 based on the munition with the greatest NEWQD that is reasonably expected to be encountered. (NOTE: DDESB-approved overpressure-mitigating engineering controls may be used to provide an equivalent level of protection (2.3 psi) [15.9 kPa]).

15.5.8.3.6. Intentional Burning of Buildings Contaminated with Explosives Residues that Present an Explosive Hazard. All personnel shall be separated by K328 overpressure distance based on the Maximum Credible Event (MCE) for the building, but not less than 1,250 feet.

15.5.8.3.7. ESQD Maps. (NOTE: The ESQD arcs and the MRA and MRS boundaries may be shown on the same map provided all PES and ES are shown in sufficient detail.)

15.5.8.3.7.1. ESQD-maps should be to scale and legible per subparagraph 14.24.2.

15.5.8.3.7.2. When a map does not contain a scale, all distances must be labeled.

15.5.8.3.7.3. The ESQD map shall show the following:

15.5.8.3.7.3.1. Each MRA or MRS.

15.5.8.3.7.3.2. The storage locations for demolition explosives and for recovered MEC.

15.5.8.3.7.3.3. Locations (planned or established) for the intentional detonations or burning of MEC, excluding CA-filled munitions. Such locations include areas where contained detonation technology will be used.

15.5.8.3.7.3.4. All ES and PES and their relationships. (NOTE: Describe any protective measures (e.g., evacuation of inhabited buildings, blocking off public highways) that will be used to eliminate or minimize any exposures within the established exclusion zone.)

15.5.8.3.7.3.5. All controlling ESQD arcs.

15.5.8.3.7.4. ESQD Arcs. ESQD arcs must be shown for:

15.5.8.3.7.4.1. **Munitions.** The MGFD shall be used for ESQD purposes for any particular MRA or MRS. However, if a munition with a greater fragmentation distance is encountered during the conduct of a munitions response, the ESQD arcs must be adjusted and the ESS or explosives safety site plan must be amended.

15.5.8.3.7.4.2. **Explosive Soil.** To determine the ESQD arc for explosive soil, calculate the MCE by multiplying the weight of the mix by the concentration of explosives (e.g., 1,000 lb of soil containing 15 percent TNT has an MCE of 150 lb). When concentrations vary within the site, weighted averages or other valid mathematical technique can be used to determine the exclusion zone; however, the ESS must support their use. The MSD for nonessential personnel shall be the greater of IBD for overpressure or the soil ejecta radius per DDESB-approved procedures.

15.5.8.3.7.4.3. **Real Property (Buildings and Installed Equipment).** For real property that is known or suspected to be contaminated with explosives residues that present an explosive hazard, and that is slated for cleanup or dismantlement, the MCE will be estimated on a case-by-case basis. The ESS shall include the rationale used for the estimation.

15.5.8.3.8. **Soil Sampling Maps.** When the property involves concentrations of explosives in the soil that are high enough to present an explosive hazard (see subparagraph 15.4.1.):

15.5.8.3.8.1. Provide a map that indicates areas that were determined to contain explosive soil.

15.5.8.3.8.2. Address methods (e.g., blending, bio-remediation) to be used to reduce explosives concentrations to a non-reactive level.

15.5.8.3.8.3. Address methods (e.g., wetting the soil before blending) to be used to reduce any explosive hazards.

15.5.8.4. **Types of MEC.** Based on research or data generated from characterization of the MRA or MRs, provide the types of MEC expected to be encountered during munitions response activities.

15.5.8.5. **Start Date.** Provide the expected date that munitions response activities that involve the placement of explosives on a site, the intentional physical contact with MEC, or the conduct of ground-disturbing or intrusive activities in areas known or suspected to contain MEC are scheduled to start. Indicate the potential consequence, if any, if DDESB approval does not occur by the start date. (Site preparation activities (e.g., surveying, gridding, or locating anomalies) may be conducted while awaiting DDESB approval of ESS.)

15.5.8.6. **MEC Migration.** Describe naturally occurring phenomena (e.g., drought, flooding, erosion, frost heave, tidal changes) that could cause the migration or exposure of MEC, and procedures for monitoring and managing such.

15.5.8.7. **Detection Equipment and Response Techniques.** The intent of this section is to describe the capabilities of detection equipment relative to the degree of removal required to support the current, determined, or reasonably anticipated end use.

15.5.8.7.1. Describe the techniques to be used to detect and remove MEC.

15.5.8.7.2. Identify the types of detection equipment to be used and the areas in which they will be employed.

15.5.8.7.3. Summarize methods used (e.g., test plots) to establish the expected detection capabilities of the equipment used. If anomaly discrimination will be used, explain what methods will be sued to establish the expected accuracy of the discrimination.

15.5.8.7.4. When describing the detection methods:

15.5.8.7.4.1. Describe the rationale (e.g., best available technology based on geology, topography, munitions characteristics, resource requirements) used to select the detection methods and technologies to be used during the response.

15.5.8.7.4.2. Address any limitations (e.g., equipment, terrain, soil type) and mitigating actions, if any.

15.5.8.7.4.3. Describe quality assurance and quality control (QA/QC) standards and pass or fail criteria for QA/QC control audits.

15.5.8.8. Disposition Techniques

15.5.8.8.1. MEC, Excluding CA-Filled Munitions

15.5.8.8.1.1. Briefly, describe the MEC, excluding CA-filled munitions, disposition techniques (e.g., OB, OD, contained detonation, incineration) to be used.

15.5.8.8.1.2. When recovered MEC, excluding CA-filled munitions, cannot be destroyed within the MRA or MRS, address how explosives safety requirements will be met during transportation and during offsite storage, treatment, or disposal. (NOTE: disposition actions should consider requirements applicable to waste military munitions.)

15.5.8.8.2. Material Potentially Presenting an Explosive Hazard (MPPEH). Describe the process to be used to manage MPPEH (see DoD 6055.09-M, Volume 7, Enclosure 6).

15.5.8.9. Environmental, Ecological, Cultural and Other Considerations. Address any environmental, ecological (e.g., endangered species), cultural (e.g., archaeological, tribal spiritual or gathering sites) and other factors that impacted, from an explosives safety perspective, the selection of the munitions response.

15.5.8.10. Technical Support. Summarize EOD, U.S. Army Forces Command/20th Support Command/22nd Chemical Battalion, or UXO-technician or UXO-qualified personnel support that may be required. (NOTE: U.S. Army Forces Command/20th Support Command/22nd Chemical Battalion is manned with specially trained personnel that provide verification, sampling, detection, mitigation, render safe, decontamination, packaging, escort, and remediation of chemical, biological and industrial devices or hazardous materials.)

15.5.8.11. Residual Risk Management. Address:

15.5.8.11.1. **LUC.** The ESS must summarize any LUC to be implemented and maintained on the property.

15.5.8.11.2. **Long-Term Management.** The ESS must address how any potential residual risks will be managed.

15.5.8.12. **Safety Education Program.** Address methods to be used to educate the public on the risks associated with MEC and CA, regardless of CA configuration.

15.5.8.13. **Stakeholder Involvement.** Briefly, summarize how stakeholder concerns affecting the explosives safety aspects of the selected munitions response were addressed.

15.5.8.14. **Contingencies.** To reduce the need to submit amendments (see subparagraph 15.6.1.), an ESS may describe alternative actions that could be used to address contingencies. As an example, an ESS may list alternative DDESB-approved engineering controls that may be used under specified conditions.

15.5.8.15. **Unexpected CA Discoveries.** Should CA, regardless of its configuration, be discovered during munitions responses to MEC, excluding CA-filled munitions, all onsite activities shall be halted until the need for a CWM response is evaluated and a decision is approved by the Service-level explosives safety office. If it is decided that a CWM response is necessary, response actions that involve the intentional physical contact with CA, regardless of configuration, or the conduct of ground-disturbing or other intrusive

activities in areas known or suspected to contain CA shall not begin until the required CSS or CWM site plan is approved by the DDESB.

15.5.9. **Selected CWM Response CSS and CWM Site Plans**

15.5.9.1. **General**

15.5.9.1.1. A response in an area (e.g., a munitions response in an MRA or MRS) that is known or suspected to contain CA, regardless of configuration, must include a CWM site plan for an Interim Holding Facility (IHF) and, when the use of onsite destruction technology is planned, for the site at which those destruction activities will occur. Generally, the information required in CSS parallels that for an ESS (see subparagraph 15.5.8); however, such information will be tailored to address CWM.

15.5.9.1.2. A CSS is not required for certain activities on a site with a history of CA-related activities when an installation or district commander, or a command-designated representative, has approved a probability assessment finding for such activities stating that the probability of discovering CA is expected to be "seldom" or "unlikely." However, the site safety and health plan must include contingency plans providing for the safe and expeditious evacuation of the site in the event CA is discovered. Should CA, regardless of configuration, be discovered during these activities, all onsite activities shall be halted until the need for a CWM response is evaluated and a decision is approved by the Service-level explosives safety office. If it is decided that a CWM response is necessary, response actions that involve the intentional physical contact with CA, regardless of configuration, and/or the conduct of ground-disturbing or other intrusive activities in areas known or suspected to contain CA shall not begin until the required CSS or CWM site plan is approved by the DDESB.

15.5.9.2. **Explosives Hazards.** When explosives hazards are known or suspected to exist along with CA hazards within a response area (e.g., the MRA or MRS), a submission that addresses both explosives safety (see subparagraph 15.5.8) and CA safety (as outlined in this section) is required.

15.5.9.3. **Background.** (see subparagraph 15.5.8.1)

15.5.9.4. **Maps.** The maps provided with a CSS must meet the requirements of subparagraph 15.5.8.2. In addition, the One Percent Lethality Distance and the IBD shall be shown.

15.5.9.5. **Chemical Agent Hazards.** When CA hazards are known or suspected to exist within a response area (e.g., the MRA or MRS), the CA downwind hazard must be considered when determining the MSD. The CSS shall provide the following information:

15.5.9.5.1. **A description of the CA MCE.**

15.5.9.5.2. A description of how essential and nonessential personnel and the public will be protected should the CA MCE occur (see DoD 6055.09-M, Volume 6) for basic personnel protection requirements (e.g., hazard zones and protective equipment) for operations involving CWM). If an Engineering Control (EC), which has not been DDESB-approved, is to be used to provide such protection, the CSS must include the

technical data substantiating the new engineering control's effectiveness. EC may be used for:

15.5.9.5.2.1. Protection from overpressure and fragments when explosively configured CWM are known or suspected.

15.5.9.5.2.2. Protection from CA effects (prevent vapor releases to the environment) during both response activities and when RCWM is stored in the IHF.

15.5.9.6. RCWM Hazard Classification and Storage

15.5.9.6.1. RCWM, suspected or confirmed, regardless of its configuration, must be stored separately from serviceable munitions and from other MEC. Additionally, suspect RCWM shall be stored separately from all other munitions and from RCWM.

15.5.9.6.2. Suspect and known RCWM shall be managed as HD 1.1 until stowed in an approved overpack container or until determined not to be RCWM (see subparagraph 15.5.8.3.3) or to be non-explosively configured RCWM (see subparagraph 15.5.9.6.4.). (NOTE: The CA downwind hazard must be considered, with the greater of the two distances used for siting purposes.)

15.5.9.6.3. Explosively-configured RCWM in an approve overpack container shall be managed as HD 1.2.1. with an explosive MCE of one round or HD 1.2.2, based on its NEWQD. Such storage may be considered HD 1.1 if advantageous for computing HFD using DDESB-approved procedures. (The CA downwind hazard must be considered, with the longer of the two distances used for siting purposes.)

15.5.9.6.4. Non-explosively configured RCWM shall be managed as HD 6.1. (The CA downwind hazard must be used for siting purposes.)

15.5.9.7. **CWM Site Plan.** A DDESB-approved CWM Site Plan for an IHF is required when CA, regardless of configuration, is known or suspected to exist on a response area. The IHF Site Plan, which is based on the worst-case CA configuration expected to be encountered, is included in the CSS. The IHF site plan shall:

15.5.9.7.1. Identify the public access exclusion distance (PAED).

15.5.9.7.2. Identify all associated ESQD arcs (see subparagraph 15.5.8.3.).

15.5.9.7.3. Address the evacuation procedures for personnel within the PAED.

15.5.9.7.4. Address any security measures and access controls for the IHF.

15.5.9.7.5. Address any EC that will be used to mitigate a CA release during IHF activities, such as:

15.5.9.7.5.1. Static storage within the IHF.

15.5.9.7.5.2. RCWM assessment activities (e.g., X-ray, portable isotopic neutron spectroscopy (PINS)).

15.5.9.7.5.3. Transportation preparation activities (e.g., transloading of multiple round containers (MRCs), MRC movement into or out of the IHF).

15.5.9.7.6. Address soil sampling maps. (See subparagraph 15.5.8.3.8.).

15.5.9.7.7. Address types of CA. (See subparagraph 15.5.8.4.).

15.5.9.7.8. Address start date. (See subparagraph 15.5.8.5.).

15.5.9.8. Detection Equipment and Response Techniques. (See subparagraph 15.5.8.7)

15.5.9.9. Disposition Techniques

15.5.9.9.1. CA, Regardless of Configuration

15.5.9.9.1.1. Briefly, describe the disposition techniques (e.g., onsite destruction) to be used.

15.5.9.9.1.2. When RCWM cannot be destroyed on site, address how CA safety and, if applicable, explosives safety requirements, will be met during transportation and during offsite storage, treatment or disposal. (Disposition actions should consider guidance applicable to waste military munitions.)

15.5.9.9.2. MPPEH. Describe the process to be used to manage MPPEH. (see DoD 6055.09-M, Volume 7, Enclosure 6.)

15.5.9.10. Environmental, Ecological, Cultural, and Other Considerations. (See subparagraph 15.5.8.9.).

15.5.9.11. Technical Support. (See subparagraph 15.5.8.10).

15.5.9.12. Residual Risk Management. (See subparagraph 15.5.8.11).

15.5.9.13. Safety Education Program. (See subparagraph 15.5.8.12).

15.5.9.14. Contingencies. (See subparagraph 15.5.8.14).

15.5.9.15. Unexpected MEC or Explosively Configured CWM Discoveries. Should unexpected MEC or explosively configured CWM be discovered during a CWM response, all onsite activities that involve intentional physical contact with such MEC or explosively configured CWM, or the conduct of ground-disturbing or other intrusive activities in areas known or suspected to contain such MEC or explosively configured CWM, shall be halted until the newly identified explosive hazards are evaluated and the DDESB approves all required CSS amendments or explosive site plans.

Section 15F—Amendments and Corrections

15.6. General. An amendment or correction to an approved ESS or CSS does not require the resubmission of the complete ESS or CSS package. However, the information submitted must be in sufficient detail to identify the specific ESS or CSS being amended or corrected, the affected portions, and the precise amendments or corrections.

15.6.1. **Amendments.** Amendments are only required when a change to an approved ESS or CSS increases explosives safety or CA risks, identifies requirements for additional or increased explosive or CA hazard controls, or increases or decreases an ESQD arc.

15.6.1.1. An amendment requires DDESB approval before the affected response actions can continue. However, response actions need not be stopped pending such approval provided:

15.6.1.1. **(ACC)** Forward amendments through command channels to HQ ACC/SEW.

15.6.1.1.1. The amendment pertains to an area (e.g., MRA or MRS) for which an ESS or CSS has already been approved; and,

15.6.1.1.2. The MAJCOM, in coordination with AFSC/SEW:

15.6.1.1.2.1. Institutes protective measures (e.g., increased ESQD, use of DDESB-approved EC) to address any explosive or CA hazards.

15.6.1.1.2.2. Accepts the possibility that the DDESB approval process may impose different or additional explosives safety or CA safety requirements.

15.6.1.2. If the amendment is for a new response area (e.g., a new MRS), then the DDESB must approve the amendment before intrusive activities begin in the new response area.

15.6.1.3. To allow the response to continue with minimal interruption, amendments should be processed by electronic means.

15.6.1.4. Changes that require an amendment include:

15.6.1.4.1. Constraints in funding, technology, access, and other site-specific conditions that impact the degree of removal addressed in the approved ESS or CSS.

15.6.1.4.2. Any increase or decrease of the ESQD arcs.

15.6.1.4.3. A change in operations requiring explosives siting or re-siting of an IHF for CWM.

15.6.1.4.4. Changes in LUC or long-term management to address residual risks. Such changes would not require intrusive activities to stop while the amendment is being processed.

15.6.2. **Corrections.** Corrections address changes to an approved ESS or CSS that do not increase explosives safety or CA risks or exposures. Corrections:

15.6.2.1. Do not require approval.

15.6.2.2. Are primarily administrative in nature and provided for information purposes.

Section 15G—After Action Reports (AAR)

15.7. General

15.7.1. An AAR for completed munitions or CWM responses is a required feature of all DDESB-approved ESS or CSS. The ARR's purpose is to document that the explosives and chemical safety aspects of the selected response have been completed per the approved ESS or CSS. In most cases, a "Statement of MEC Removal" or "Statement of Munitions Response MEC Removal Actions" fulfills the requirements in subparagraph 15.7.2. The DDESB Staff shall acknowledge receipt of an AAR, and raise any issues that require resolution before land transfer or an alternative use can safely proceed.

15.7.2. The AAR:

15.7.2.1. Shall be submitted through command channels to the DDESB.

15.7.2.1. **(ACC)** Submit AAR's through command channels to HQ ACC/SEW for processing.

15.7.2.2. May be submitted electronically.

15.7.2.3. Will remain part of the DDESB's action file; however, installations will continue to be responsible for complying with all recordkeeping requirements.

15.7.2.4. Shall summarize the MEC or CA, regardless of CA configuration, found.

15.7.2.5. Shall describe the relative effectiveness and any limitations of the technologies used during the munitions response or CWM response and the effects on residual risk relative to that originally projected.

15.7.2.6. Shall include maps showing:

15.7.2.6.1. Areas from which MEC or CA, regardless of CA configuration, was removed.

15.7.2.6.2. Areas within a response area (e.g., within an MRA or MRS) where response actions were not performed and the rationale for not addressing those areas.

15.7.2.6.3. The known or reasonably anticipated end use of each area.

15.7.2.7. Shall summarize the LUC that were implemented, if any, and the areas to which they apply.

15.7.2.8. Shall address provisions for long-term management.

Section 15H—Transfer of Real Property Outside DoD Control

15.8. General. AFI 32-9004, *Disposal of Real Property*, which is managed by the Air Force Real Property Agency (AFRPA), addresses contaminated real property. Activities associated with the disposal of contaminated real property should be coordinated with the installation civil engineer's real estate division representative. Whenever disposal is contemplated, an Environmental Baseline Survey must be conducted to identify any hazardous conditions associated with the subject property, including unexploded ordnance and other hazardous materials. Pursuant to DoD guidance on real property disposal, real property known to contain or suspected of containing explosive CA hazards may not be transferred out of DoD control (other than to the Coast Guard) until the Chairman, DDESB, has approved measures submitted by the transferring Component to ensure the recipient of the property is fully informed of both the actual and potential hazards relating to the presence or possible presence of explosives or CA, and restrictions or conditions placed on the use of the property to avoid harm to users due to the presence of explosives or CA.

15.8.1. Notices. A recipient of such DoD property shall be provided:

15.8.1.1. Details of any past removal or remedial actions, including:

15.8.1.1.1. The degree of MEC or CA removal.

15.8.1.1.2. The process used to determine that degree of removal to be adequately protective.

15.8.1.2. Written notification that detection and removal methods are not 100 percent effective, and that residual hazards may remain in areas (e.g., MRS) that were subjected to response actions.

15.8.2. **Restrictions and Conditions.** Based on potential explosive and CA hazards present and the projected use of the property, the following types of use restrictions and conditions shall be imposed, as appropriate, on such DoD property:

15.8.2.1. A prohibition on excavation or drilling in any areas known or suspected to contain MEC or CA, regardless of CA configuration, without appropriate permits or assistance.

15.8.2.2. A prohibition on disturbing, removing, or destroying any found MEC or CA, regardless of CA configuration.

15.8.2.3. A requirement to immediately notify local law enforcement representatives of any discovery of MEC or CA, regardless of configuration.

15.8.2.4. A prohibition on the construction or installation of particular improvements including utilities, roadways, airstrips, navigable waterways, pipelines, and structures, both above and below ground.

15.8.2.5. A prohibition on specific alterations, extensions, or expansions to such improvements.

15.8.2.6. A prohibition on certain types of uses, such as child care centers, housing, or farming.

15.8.2.7. A restriction to a specific type of use or owner, such as a state National Guard range.

15.8.2.8. Inclusion of Air Force explosives and CA safety personnel and the Chairman, DDESB, in deliberations, decision making, and approvals pertaining to future munitions response activities to address MEC or CA, regardless of CA configuration.

15.8.2.9. Inclusion of the restrictions and conditions in the recorded land records for the jurisdiction, to the extent allowed by state law.

Chapter 16

SPECIAL STORAGE PROCEDURES FOR WASTE MILITARY MUNITIONS

Section 16A—Scope and Applicability

16.1. Scope and Applicability.

16.1.1. As referenced in DoD 6055.09-M, Volume 7, the Environmental Protection Agency (EPA) promulgated the Munitions Rule (MR), Subpart M of Part 266, title 40, CFR to define when chemical and conventional military munitions become hazardous waste and to provide for the safe storage and transportation of such waste. The MR takes precedence over these standards and sets forth two approaches for the storage of waste military munitions:

16.1.1.1. A Conditional Exemption (CE) from certain "Resource Conservation and Recovery Act (RCRA)" requirements.

16.1.1.2. A new RCRA storage unit standard (i.e., Subpart EE, of Parts 264 and 265 of 40 CFR).

16.1.2. This chapter establishes additional requirements for storage of waste military munitions.

Section 16B—General

16.2. General.

16.2.1. A military munition is a "waste" if it is a solid or hazardous waste under regulations implementing the RCRA, (42 U.S.C. Section 9601 et seq). In general:

16.2.1.1. An unused military munition is a solid waste when any of the following occurs:

16.2.1.1.1. The munition is abandoned by being disposed of, burned, detonated (except during intended use), incinerated, or treated prior to disposal; or

16.2.1.1.2. The munition is removed from storage in a military magazine or other storage area for the purpose of being disposed of, burned, or incinerated, or treated prior to disposal, or

16.2.1.1.3. The munition is deteriorated or damaged (e.g., the integrity of the munition is compromised by cracks, leaks, or other damage) to the point that it cannot be put into serviceable condition, and cannot reasonably be recycled or used for other purposes; or

16.2.1.1.4. An authorized military official has declared the munition a solid waste.

16.2.1.2. A used or fired military munition is a solid waste:

16.2.1.2.1. When transported off range or from the site of use, where the site of use is not a range, for the purposes of storage, reclamation, treatment, disposal, or treatment prior to disposal; or

16.2.1.2.2. If recovered, collected, and then disposed of by burial, or landfilling either on or off a range.

16.2.1.3. For purposes of RCRA section 1004(27), a used or fired military munition is a solid waste, and, therefore, is potentially subject to RCRA corrective action authorities under section 3004(u) and (v), and section 3008 (h), or imminent and substantial endangerment authorities under section 7003, if the munition lands off-range and is not promptly rendered safe and/or retrieved. Any imminent and substantial threats associated with any remaining material must be addressed. If remedial action is not feasible, the operator of the range must maintain a record of the event for as long as any threat remains. The record must include the type of munition and its location (to the extent the location is known). For further clarification see 40 CFR §266.202 under Definition of Solid Waste.

Section 16C—Waivers and Exemptions

16.3. Waivers and Exemptions.

16.3.1. **CE Storage.** Waivers and exemptions from this standard are not authorized for AE storage facilities storing CE waste military munitions.

16.3.2. **RCRA Storage.** Waivers and exemptions from this Standard will only be available to units storing waste munitions under RCRA unit standards (e.g., Subpart EE of Part 264 of 40 CFR). The approval level for all waivers/exemptions is the Secretary of the Air Force. Approval may be delegated no lower than the assistant secretary.

Section 16D—Storage Requirements

16.4. Requirements for Storage of Waste Military Munitions Under CE.

16.4.1. Installations storing waste military munitions under CE must comply with 40 CFR §266.205(a). (*Note*: The MR-established CE does not apply to chemical agents or toxic chemical munitions.)

16.4.2. Each installation shall maintain records, for a minimum of 3 years from the last day the waste munitions were stored describing:

16.4.2.1. The type of waste military munitions stored by standard nomenclature, Lot Number, Federal Supply Class (FSC), National Stock Number (NSN), Department of Defense Ammunition Code (DODAC), condition code, and quantity of each type waste military munitions stored. A separate record or line item is required for each type of munition in any mixed lot of munitions received for storage.

16.4.2.2. The date that each military munitions, by type, was identified as waste.

16.4.2.3. The last storage date for each, by type, waste military munitions.

16.4.2.4. The storage location or locations (e.g., building number or storage pad, and grid coordinates) used.

16.4.2.5. The disposition (e.g., destroyed, demilitarized, shipped) and date of action, by type of waste munitions.

16.4.2.6. When applicable, the sending and receiving sites for those waste military munitions received from or shipped to off-site sources.

16.4.3. Physically separate (e.g., on a separate pallet or shelf, etc.) waste military munitions from non-waste military munitions when both are stored in the same AE storage facility.

16.4.4. Clearly mark the segregated waste military munitions to ensure proper identification.

16.4.5. Store waste munitions under CE in AE storage facilities that comply (without waiver or exemption) with the provisions of this standard. Each AE storage facility storing waste military munitions or explosives under CE must be included in a DDESB-approved explosives safety site plan that the installation keeps on file. Those portions of the site plan addressing AE storage facilities storing waste military munitions under CE shall be made available to appropriate Federal or State environmental regulatory authority upon request.

16.4.6. Installations shall develop local operating instructions or plans that are designed to provide safety, security, and environmental protection. These plans will be coordinated with the appropriate Federal, State, and Local emergency response authorities (e.g., law enforcement, fire departments, hospitals, and etc.) and established planning committees.

Section 16E—Loss of CE

16.5. Loss of CE.

16.5.1. The unpermitted or uncontrolled detonation, release, discharge, or migration (e.g., loss or theft, or as a result of fire or explosion, etc.) of waste military munitions out of any storage unit that might endanger human health or the environment will result in the immediate loss of CE for those waste military munitions. Incidents of this nature and the loss of CE require reporting per paragraph 16.7.

16.5.2. The appropriate Federal or State environmental regulatory authorities may withdraw CE based on review or inspection of the installation's or responsible activity's compliance with the requirements for storage of waste military munitions under CE. The Air Force Safety Center (AFSC) may, at any time, restrict an activity from using CE. In addition, the DDESB or AFSC, upon discovery of a condition that could warrant loss of CE, will report the condition to the commander of the installation or responsible activity.

16.5.3. If CE is lost, the waste military munitions are subject to other RCRA hazardous waste regulations. The installation or responsible activities must obtain any required RCRA permits because of the loss of CE.

16.5.4. Installations and responsible activities may apply for reinstatement of CE per 40 CFR §266.205(c).

16.6. Other Storage Standards.

16.6.1. Many States regulate waste management activities, including the storage of waste military munitions. In the event such State regulations conflict with Air Force Explosives Safety Standards, the AFSC will attempt to resolve the conflict. For those issues that cannot be resolved, AFSC will notify the DDESB of any irreconcilable conflict of State law, regulation, or directive with these or other DoD or Air Force explosives safety standards. The Chairman, DDESB, will review the law, regulation, or directive for any potential impact on

explosives safety and will assist AFSC, in coordination with the Deputy Under Secretary of Defense (Installations and Environment) (DUSD{IE}), in resolving such regulatory conflicts. Nothing in this paragraph shall affect the component's right to seek review of the State law, regulation, or directive in a court of competent jurisdiction.

16.7. Un-Permitted and Uncontrolled Loss Reporting. In addition to other applicable reporting requirements, installations and responsible activities will notify AFSC/SEW (through MAJCOM), the appropriate Federal or State environmental regulatory authority in accordance with 40 CFR 266.205(a)(1)(v), and established local committees as follows:

16.7.1. Telephonically or electronically (by e-mail message or facsimile) within 24 hours from the time the installation or responsible activity becomes aware of any unpermitted or uncontrolled detonation, release, discharge, or migration of waste military munitions out of any storage unit (e.g., loss or theft, or as a result of fire or explosion, etc.) that may endanger human health or the environment.

16.7.2. In writing, if the initial report was telephonic, within 5 days from the time the installation or responsible activity becomes aware of any unpermitted or uncontrolled detonation, release, discharge, or migration of waste military munitions out of any AE storage facility (e.g., loss or theft, or as a result of fire or explosion, etc.) that may endanger human health or the environment. Follow-up reports to AFSC/SEW are only required when pertinent information, which was not previously reported, becomes known.

Section 16F—Closure of Facilities Storing Waste Munitions

16.8. Closure of Facilities Storing Waste Munitions Under CE.

16.8.1. When an AE storage facility storing waste military munitions under CE is permanently taken out of service for the storage of non-waste and waste military munitions, installations and responsible activities will ensure that such facilities are appropriately closed.

16.8.2. Installations or responsible activities must notify the appropriate Federal or State environmental regulatory authority in writing at least 45 days before closure activities begin. Initiation of these closure procedures should occur within 180 days after the date the decision is made to permanently stop using the facility for the storage of waste military munitions.

16.8.3. Upon completion of closure activities, a "certification of closure," signed by the installation or responsible activity commander, or other equivalent level authority, and by an independent (i.e., an individual not assigned within the commander's or equivalent-level authority's chain of command) registered professional engineer must be submitted to the appropriate Federal or State environmental regulatory authority within 90 days of completing the closure activities, or by applicable law.

16.8.4. The certificate of closure must state, at a minimum, that each of the explosives safety requirements in Chapter 15 have been met and that waste military munitions and residues are removed in such a manner as to protect the public and the environment consistent with the planned use of the storage facility and of the property.

16.8.5. If closure certification cannot be rendered, the installation or responsible activity must contact the appropriate Federal and State environmental regulatory agency to determine the appropriate course of action.

16.9. Discontinuance of use for the Storage of Waste Munitions. When an AE storage facility storing waste military munitions under CE is permanently taken out of service for the storage of waste military munitions but is to continue in service for the storage of non-waste military munitions, installations and responsible activities will ensure that waste military munitions and residues are removed.

16.10. Closure of Facilities Storing Waste Military Munitions Under RCRA. In addition to those explosives safety requirements in Chapter 15, closure procedures for those sites operating under existing RCRA permits will follow those closure requirements stipulated in the respective permit.

Chapter 17

UNEXPLODED ORDNANCE (UXO)

Section 17A—Introduction

17.1. This chapter establishes standards to protect personnel and property from explosive and chemical agent (CA) hazards associated with UXO or other military munitions, to include discarded military munitions (DMM), that have experienced abnormal environments. This chapter's standards do not apply during contingencies, combat operations, and military operations other than war; however, these explosives safety principles should always be considered in such circumstances and applied as the situation allows.

17.2. General

17.2.1. UXO is considered the most dangerous category of military munitions. However, other military munitions, to include DMM, that are encountered outside the Department of Defense's munitions logistics management system, particularly those that have experienced an abnormal environment, must be considered equally dangerous and managed as UXO until assessed and determined otherwise by EOD personnel, EOD-qualified U.S. Army Forces Command/20th Support Command/22nd Chemical Battalion personnel and, when specifically authorized by the AF installation commander, UXO-qualified personnel. Military munitions that have experienced abnormal environments include, but are not limited to, munitions remaining after attempted demilitarization by open burning (OB) or open detonation (OD); munitions involved in accidents or fires; munitions or components subjected to certain tests (e.g., fuze arming tests, jolt and jumble tests) that might cause arming. (U.S. Army Forces Command/20th Support Command/ 22nd Chemical Battalion is manned with specially trained personnel that provide verification, sampling, detection, mitigation, render safe, decontamination, packaging, escort, and remediation of chemical, biological and industrial devices or hazardous materials.)

17.2.1.1. UXO will most likely be found in areas that the DoD currently uses (e.g., operational ranges) or once used (e.g., former ranges) for military munitions training or testing. For a variety of reasons, UXO can also be encountered in other areas, to include where contingency, combat, or military operations other than war have occurred.

17.2.1.2. Munitions that may have experienced an abnormal environment might be encountered in areas at which an accident or incident involving military munitions occurred, in areas that the DoD uses or once used for open detonation of excess, obsolete, or unserviceable military munitions, or in other areas.

17.2.2. Positive identification of any potential explosive or CA hazards and consideration of the potential consequences of an intentional or accidental detonation is required before disposition of any recovered munition. This is essential for munitions that might contain CA that would pose a potential downwind CA hazard. Therefore, for both explosives and CA safety reasons, munitions found outside the DoD's established logistical munitions management systems (e.g., UXO, DMM) shall be managed as UXO, until assessed, identified, and evaluated as to their explosive or CA hazards and determined otherwise by

EOD qualified personnel. Munitions that contain an unknown liquid fill shall also be managed as chemical warfare material (CWM) until assessed, and the fill determined.

17.2.2.1. Only EOD personnel and, in some cases, U.S. Army Forces Command/20th Support Command/22nd Chemical Battalion personnel will respond to military or civilian authority requests for support to an explosives or munitions emergency.

17.2.2.2. For responses that either involve recovered CWM (RCWM) or munitions that contain an unknown liquid fill, U.S. Army Forces Command/20th Support Command/22nd Chemical Battalion personnel and, in cases where the munition's physical characteristics allow positive identification, EOD personnel, are the only DoD personnel authorized to determine the most probable fill of such munitions. The determination as to whether certain munitions contain a CA fill is difficult, if not impossible, solely by visual inspection.

17.2.2.2.1. Many munitions have physical characteristics (e.g., shape, markings) that permit technically qualified personnel to rule out the potential for a CA fill. For example, a U.S.-manufactured 4-inch Stokes mortar's physical dimensions clearly indicate whether it contains a CA or explosive fill. However, the design or physical condition of some munitions may not allow their complete identification by visual inspection. This is especially true for used munitions and for munitions that have either experienced abnormal environments or been exposed to the elements (e.g., buried or submerged) for an extended period.

17.2.2.2.2. Munitions whose external design does not always allow positive visual identification of their filler include, but may not be limited to: 4.2-inch mortars (M1, M2, and the M2A1 models) and Livens projectiles (MKII (M1) and MKIIAI) models. U.S. Army Forces Command/20th Support Command/22nd Chemical Battalion personnel and, in some cases, EOD personnel, are the only DoD personnel authorized to determine the most probable fill of these munitions.

17.2.3. Discovery of military munitions (e.g., UXO) outside the DoD's munitions logistics management system might, in some circumstances, indicate that a munitions response (see Chapter 15) or other protective measures are warranted. Installations shall notify AFSC/SEW, who will in-turn notify the Chairman, DDESB of:

17.2.3.1. Repetitive explosives or munitions emergency responses to a discrete geographic area, where the circumstances surrounding the explosives or munitions emergency response are similar.

17.2.3.2. A single explosives or munitions emergency response that involves multiple military munitions (e.g., UXO, DMM, or RCWM) discovered at a discrete geographic area. Such discoveries might indicate that the area is a Formally Used Defense Site (FUDS).

Section 17B—Disposition

17.3. Disposition of UXO and of Other Military Munitions Being Managed as UXO

17.3.1. The DoD is responsible for protecting people, property, and the environment from potential explosive hazards (e.g., blast and fragmentation) or CA hazards (e.g., downwind

hazards) associated with DoD-owned UXO. The DoD is equally responsible for protecting personnel who respond to address such hazards.

17.3.2. USAF will work collaboratively with environmental regulators and safety officials toward resolving, in a mutually agreeable manner, any concerns with the planned disposition of UXO during a response action; however, the protection of people, to include DoD response personnel, from the hazards associated with the discovered munition and with its disposition is paramount.

17.3.3. There are no safe procedures for moving, rendering safe, or destroying UXO, but merely procedures considered less dangerous. Destruction-in-place (also referred to as blow-inplace (BIP)) is the least dangerous; therefore, it is the preferred method of UXO destruction.

17.3.4. DoD response actions to address UXO must comply with these Standards and other applicable DoD policies and with applicable federal, state, interstate, and local laws and regulations, and any enforceable agreements. Installations must ensure that, if not already in place, protective measures (e.g., site security) are implemented as quickly as practicable following discovery of UXO or other munitions outside the DoD's munitions logistics management system. Should environmental regulators and safety officials have concerns regarding the sufficiency of the protective measures to be taken, these concerns should be raised to the AFSC/SEW, who will in-turn notify the Chairman, DDESB for resolution. Protective measures must be maintained throughout any delay caused by:

17.3.4.1. Compliance with laws, regulations, and agreements.

17.3.4.2. The need to address concerns raised by environmental regulators and safety officials about:

17.3.4.2.1. Methods for managing any potential adverse impacts (e.g., harming endangered species, damaging cultural resources) of implementing a pending BIP operation.

17.3.4.2.2. The use of alternative (to BIP) disposition methods.

17.3.4.3. Other factors (e.g., weather).

17.3.5. Military munitions known to contain CA or contain or are suspected to contain an unknown liquid fill will not normally be destroyed by open detonation because they pose potential downwind CA hazards. The responsible DoD Component (normally the Department of the Army), no lower than the Deputy Assistant Secretary level, may approve individual exceptions. Such exceptions should only be approved after discussions (see **paragraph 17.3.2**.) with appropriate elected representatives, environmental regulators, and safety officials from those communities that could potentially be impacted by the munition's disposition. DoD Components must make sure that protective measures to ensure explosives safety are maintained during any delay in disposition.

17.3.6. UXO shall not be moved unless EOD qualified personnel determine that the risks associated with movement are acceptable. (During munitions responses, specifically authorized UXO-qualified personnel may make this determination.) Although environmental regulators and safety officials recognize the expertise of AF personnel involved in UXO disposition decisions, they may challenge an AF field expert's decision and seek to elevate

their concerns to higher levels of authority for resolution. (See **paragraphs 17.3.2 and 17.3.4**.)

17.3.6.1. If EOD qualified personnel determine that the risk associated with movement is unacceptable, or if the munition's condition precludes a complete assessment beyond positive identification of any potential explosive hazard or determination that it does not present a CA hazard, then it should be BIP.

17.3.6.2. In some circumstances, EOD personnel may determine that careful movement of a UXO, for a limited distance and using prescribed EOD procedures, is both necessary and allowed by EOD procedures. In such circumstances, destruction by detonation will occur in the general vicinity of discovery.

17.3.7. Under some circumstances, when BIP does not pose an immediate, certain, and unacceptable risk to people, critical operations, facilities, or equipment, environmental regulators and safety officials may seek collaboration (see **paragraph 17.3.2**.) with the AF installation Commander to mutually agree to mitigation measures to reduce potential impacts of the pending BIP to public safety, the environment, and cultural resources. (See **paragraph 17.3.4**.)

17.3.8. When BIP poses an immediate, certain, and unacceptable risk to people, critical operations, facilities, or equipment, EOD personnel may determine that render safe procedures (RSP) should be attempted.

17.3.8.1. Because the application of RSP exposes EOD personnel to added risks (greater than BIP), the application of RSP shall only be attempted in limited circumstances.

17.3.8.2. Should EOD personnel employ RSP, protective measures shall be applied to mitigate potential explosive effects and, when necessary, a possible CA release.

17.3.8.3. Only EOD personnel are authorized to conduct RSP.

17.3.8.4. EOD personnel shall perform RSP per Joint Service EOD Technical Data.

17.3.8.4.1. Conflicts between this Standard and the Joint Service EOD Technical Data should be raised through AFSC/SEW to the Chairman, DDESB, and to the Joint EOD Program Board for resolution.

17.3.8.4.2. When the condition of UXO (e.g., crushed, bent, broken, mangled) precludes strict adherence to published procedures, onsite EOD personnel will determine and perform the procedure -- established or innovative -- that will have the most probable degree of success to render the munitions safe while mitigating potential explosive or, when necessary, CA effects.

17.3.9. The onsite EOD supervisor, in the case of munitions responses, the UXO safety officer, shall ensure that the detonation site is inspected after each detonation or any misfire. No one shall be allowed within the Minimum Separation Distance (MSD) from the detonation site until the onsite EOD supervisor or UXO safety officer declares the area is safe.

17.3.10. When EOD personnel or, in the case of munitions responses, authorized UXO personnel, positively identify UXO as to its explosive hazard and determine it safe to dispose of by other than BIP or immediate destruction by detonation, either in the general vicinity of

discovery or at a designated location then the AF installation Commander, with the advice of EOD personnel, may evaluate a variety of safe disposition alternatives and options for managing any potentially adverse impact of the selected disposition alternative. (See **paragraph 17.3.2**.)

Section 17C— Special Considerations

17.4. General

17.4.1. Disassembly and Inerting Operations

17.4.1.1. Disassembly and inerting operations shall not be conducted without proper authorization.

17.4.1.2. Contact AFSC/SEW for additional guidance on disassembly and inerting operations.

17.4.2. **Construction Support**

17.4.2.1. Construction support may be required during intrusive activities (e.g., laying or repairing utilities, improving roads) on property known or suspected to contain UXO or DMM.

17.4.2.2. The responsible authority (e.g., installation commander or designated representative) shall determine the level of construction support required on a case-by-case basis. Construction support is determined by the probability of encountering UXO or DMM.

17.4.2.2.1. **Low Probability.** EOD personnel must be contacted to ensure they are available, advised about the project, and placed "on call" to assist if suspected UXO are encountered during construction. (Discoveries of UXO or DMM on such sites requires reassessment of the level of support required.)

17.4.2.2.1.1. A "low" determination may only be assigned to those areas for which a search of available historical records and onsite investigation data indicates that, given the military or munitions-related activities that occurred at the site, the likelihood that UXO or other MEC are present is low.

17.4.2.2.1.2. Munitions-related activities that may merit a "low" determination include, but are not limited to, the use of the area: for live-fire training exclusively with small arms ammunition; for maneuver training, to include maneuver training involving the use of smokes, pyrotechnics, and simulators; as firing points; for munitions inspection, handling, storage, or transfers, to include residue points and inert storage yards; for air defense; or as munitions operating facilities, the exceptions being facilities in which the processes used might have resulted in the generation of concentrations of munitions constituents high enough to present an explosive hazard. Areas on which a previous response has been completed, pursuant to a DDESB-approved ESS, for the stipulated reuse also qualify for "low" determinations.

17.4.2.2.2. **Moderate to High Probability.** EOD personnel must attempt to identify and remove any explosive or CA hazards in the construction footprint prior to any intrusive construction activities.

17.4.2.2.2.1. A "moderate to high" determination may be assigned to those areas for which a search of available historical records or onsite investigation data indicates that, given the military or munitions-related activities that occurred at the site, there is more than a low probability that UXO or other MEC are present.

17.4.2.2.2.2. Munitions-related activities that may merit a "moderate to high" determination include, but are not limited to, the use of the area: for live-fire training other than exclusively with small arms ammunition (e.g., munitions containing high explosive projectiles); as operational range impact areas; for OB or OD of excess, obsolete, or unserviceable munitions; as munitions operating facilities where processes used might have resulted in the generation of concentrations of munitions constituents high enough to present an explosive hazard; for munitions burial; or for any activities involving possible disposition of CWM.

17.4.3. **Anomaly Avoidance.** Anomaly avoidance techniques must be employed on properties known or suspected to contain UXO or DMM to avoid surface UXO and, when necessary, subsurface anomalies.

17.4.3.1. When anomaly avoidance is used during training (e.g., maneuver training, live-fire training), testing, or operational range management activities conducted on such properties, the commander responsible for such activities will ensure:

17.4.3.1.1. A risk assessment to evaluate the potential hazards associated with the proposed activities is completed and methods to mitigate any potential exposures are implemented.

17.4.3.1.2. Training in anomaly avoidance, explosives safety and, when appropriate, CA safety training is provided to all personnel involved in the training, testing, or operational range management activities that access property known or suspected to contain UXO or DMM.

17.4.3.2. When anomaly avoidance is used during other than training or testing activities, or during activities involving other than operational range management activities:

17.4.3.2.1. Surface UXO must be avoided during any activities that require entry to the area (e.g., conducting cultural resource studies).

17.4.3.2.2. Surface UXO and subsurface anomalies must be avoided during any intrusive work (e.g., drilling environmental monitoring wells).

17.4.3.2.3. Escort support must be provided by EOD personnel, or:

17.4.3.2.3.1. Within areas known or suspected to contain UXO, excluding CA, regardless of configuration, by:

17.4.3.2.3.1.1. UXO-qualified personnel.

17.4.3.2.3.1.2. UXO Technician I personnel under the supervision of UXO qualified personnel. The responsible commander or authority may, based on a

risk assessment and implementation of methods to mitigate any potential exposures, approve UXO Technician I personnel to perform escort duties without supervision.

17.4.3.2.3.2. Within areas known or suspected to contain CA, regardless of configuration, to include areas where such CA is commingled with other UXO, by UXO qualified personnel trained in CWM responses.

17.4.3.2.4. **During anomaly avoidance:**

17.4.3.2.4.1. Discovered surface UXO must be avoided and their locations noted and reported to appropriate authorities.

17.4.3.2.4.2. Detected subsurface anomalies which must not be investigated shall be marked, when appropriate, and avoided.

Section 17D— Access to UXO Areas

17.5. Access to Areas Known or Suspected to Contain UXO. To ensure explosives and CA safety risk is identified and controlled on real property currently or formerly under the jurisdiction, custody, or control of USAF, the AF installation Commander must:

17.5.1. Prohibit unnecessary access (e.g., livestock grazing; recreational uses, such as hunting and hiking) and take appropriate action to deter unauthorized access to areas under AF control that are known or suspected to contain UXO or other munitions that have experienced abnormal environments.

17.5.1. **(ACC)** Generally public access to Hazard Areas, as defined in AFI 13-212, *Range Planning and Operation*, will be prohibited. Risk management procedures may be used to refine areas within the overall Hazard Area that present a UXO hazard (e.g. lessons learned from EOD range clearance activities, use of inert versus live weapons, or other historical data). When subdivided in this way, public access may be allowed in those areas without a UXO hazard. Public access to areas with a UXO hazard is prohibited at all times. Subdivided Hazard Areas that will be used for public access will be approved by the Installation Commander. Maintain documentation of the approval and associated RM analysis in the range management office.

17.5.1.1. Access to such areas, particularly operational range impact areas, shall be limited to personnel who have an operational requirement to enter such areas (e.g., range maintenance, environmental monitoring, security). A risk assessment to evaluate the potential hazards associated with the proposed activity shall be completed and methods to mitigate any potential exposures shall be implemented before allowing access.

17.5.1.1. **(ACC)** Refer to AFI 13-212 for additional information on Range Access. Risk assessments for personnel who have an operational requirement to enter areas with a UXO hazard will be approved by the Range Operating Authority.

17.5.1.2. Actions to prohibit or deter access may include establishing access controls (e.g., fencing the area, establishing roving security patrols) and providing public notifications (e.g., posting UXO hazard warning signs, conducting UXO safety education programs) of any potential hazards. (When used, signs must be legible and, when appropriate, multi-lingual or pictograms.)

17.5.2. When the USAF does not control the area (e.g., FUDS), at a minimum, provide written notification to the property owner and, if known, any tenants of the potential explosive and CA hazards present. A record of this notification must be maintained in permanent records.

17.5.3. Assume the following areas contain UXO or other munitions that have experienced abnormal environments:

17.5.3.1. Operational range impact areas, to include their associated safety zones (e.g., caution area, safety buffer zone). Exceptions include, but are not limited to, ranges used exclusively for training with small arms ammunition.

17.5.3.2. Ranges (sites) used for OB or OD of excess, obsolete, or unserviceable munitions.

17.5.3.3. Former impact areas and former OB or OD sites, unless documentation exists to show that they were adequately cleared during range closure or that an appropriate munitions response has been completed. In some cases, because these former impact areas or former OB or OD sites may have transferred from USAF control, the AF's ability to restrict access may be limited or nonexistent. In such cases, USAF shall, at a minimum, ensure that:

17.5.3.3.1. The property owner is provided written notification of the potential explosives and CA hazards and the risks inherent in any use of property that is inconsistent with those hazards.

17.5.3.3.2. A public UXO safety education program is implemented, when appropriate.

17.5.4. On USAF property, prohibit construction in areas known or suspected to contain UXO or DMM without required:

17.5.4.1. Construction or UXO avoidance support. (See paragraphs 17.4.2. or 17.4.3.)

17.5.4.2. Approved ESS, CSS, or site plan for munitions responses. (See Chapter 15.)

17.5.5. Provide, or in the case of owners or tenants of non-USAF controlled property, offer explosives safety and, when appropriate, CA safety training to all individuals authorized access to USAF property known or suspected to contain UXO.

17.5.6. Develop guidelines to determine when individuals, who for operational reasons (e.g., environmental monitoring), are authorized access to areas under USAF control that are known or suspected to contain UXO, must be escorted into the area in accordance with subparagraph 17.4.3.2.3.

17.5.7. Establish UXO safety education programs to educate USAF personnel, their dependents, and private citizens that live near areas known or suspected to contain UXO about explosive hazards and, when appropriate, CA hazards associated with UXO, and with the risks associated with trespassing on operational ranges or with entering areas known or suspected to contain UXO.

17.5.8. Prior to changing the use of a property known or suspected to contain UXO or munitions that have experienced abnormal environments to a use that is incompatible with their presence:

17.5.8.1. For operational ranges, perform an appropriate range clearance, whether changing to a similar (e.g., converting an impact area to a hand grenade range) or dissimilar use (e.g., changing a range to a maneuver area).

17.5.8.2. For areas on USAF property, other than operational ranges, perform an appropriate munitions response.

17.5.8.3. For property not under USAF control, upon learning of a proposed change in use or pertinent munitions response action, offer to engage in munitions response activities only to the extent necessary to ensure planned response actions afford protectiveness from an explosives and CA safety perspective. The USAF engagement in such munitions response activities may be limited to explosives safety experts providing basic guidance and advice during applicable deliberations, decision making, and approval activities unless additional DoD services are arranged through contractual or reimbursement mechanisms between USAF and other responsible parties.

Section 17E—Identification and Control

17.6. To ensure explosives and CA safety risk is identified and controlled on real property currently or formerly under the jurisdiction, custody, or control of the USAF, Installation Commanders must create and maintain permanent records required by paragraph 15.2.2. When an operational range is closed or an installation is deactivated, the Installation Commander must designate the office to transfer these records to ensure their permanent retention.

17.7. Minimum Separation Distance (MSD) for UXO

17.7. (ACC)Minimum Separation Distance (MSD) for UXO. See AFMAN 91-201 para 12.74. for additional requirements for intentional detonations.

17.7.1. The MSD for intentional detonations (see Chapter 15), which may be reduced if supported by a hazard assessment or when using approved engineering controls listed in EOD publications (for explosives or munitions emergency responses), or other DDESB approved engineering controls (for munitions responses), is the greatest distance of:

17.7.1.1. Blast overpressure, as computed by using the formula: $D = 328W^{1/3}$.

17.7.1.2. The calculated MFD.

17.7.1.3. The appropriate downwind hazard distance for CA.

17.7.2. The MSD for unintentional detonations (see Chapter 15), which may be reduced if supported by a hazard assessment or when approved engineering controls are employed, for:

17.7.2.1. Nonessential Personnel. The greatest distance of:

17.7.2.1.1. Blast overpressure, as computed by using the formula: $D = 40W^{1/3}$.

17.7.2.1.2. The calculated MFD. (NOTE: Lesser distances may be used if supported by a hazard assessment; however, in no case will the distance be less than the HFD; the exception is when approved engineering controls are used.)

17.7.2.1.3. The appropriate downwind hazard distance for CA.

17.7.2.2. Team Separation Distance (TSD). The greatest distance of:

17.7.2.2.1. Blast overpressure, as computed by the formula: $D = 40W^{1/3}$.

17.7.2.2.2. The appropriate downwind hazard distance for CA.

Section 17F—Other Considerations

17.8. General

17.8.1. **Transportation.** All transportation must comply with the requirements of applicable federal, state, interstate, and local laws, and all implementing regulations relating to transportation of solid waste, hazardous substances, hazardous materials, and toxic substances.

17.8.1.1. **UXO.** Before UXO that may pose an explosive or CA hazard may be transported or shipped over public transportation routes, EOD personnel must determine whether the UXO is safe for transport. A determination that the UXO is safe for transport must be documented in the EOD incident report. A copy of the incident report must accompany the shipment.

17.8.1.2. **RCWM.** Before RCWM may be transported or shipped, it must be assessed by the Army Material Assessment Review Board as safe for transport and packaged in an over-pack container specifically designed and approved by the Army and by the DOT for the transport of RCWM (see subparagraph 15.5.9.9.1.2.). In addition, the specific notifications and concurrences required in 50 U.S.C. § 1512 must be met.

17.8.2. Firefighting Involving Areas Known or Suspected to Contain UXO or DMM. (See Chapter 10.)

17.8.2.1. Advanced planning is essential for firefighting operations involving areas that are known or suspected to contain UXO or DMM or CA hazards. Coordination of such plans between firefighters and explosives safety personnel or EOD personnel and, when appropriate, CA safety professionals, is essential.

17.8.2.2. Senior firefighting personnel should carefully assess whether to fight a fire involving areas that are known or suspected to contain explosive or CA hazards. Factors to consider include, but are not limited, to: the types of munitions that might be present; the safety of firefighting personnel and of the public; the potential loss of critical assets; and the duration and intensity of the fire.

17.8.2.2.1. When the decision is made not to fight such fires, the area should be evacuated and remain so until it has cooled for at least 24 hours. (See **paragraph 10.10**.)

17.8.2.2.1. **(ACC)** Document pre-fire plans with the decision not to fight fires in these areas.

17.8.2.2.2. When the decision is made to fight such fires, all firefighters involved in fighting the fire should be provided basic safety training for fighting fires involving military munitions.

17.8.3. **Controlled Burns**

17.8.3.1. Burning vegetation to facilitate safe UXO clearance or removal operations is permitted, provided proper safeguards are in place to protect all personnel from unintentional detonations. These burns must be carefully planned and executed to manage explosives safety risks and environmental effects. During such burning operations, all personnel shall be at MFD from the burning or burned area, based on the munition with the greatest fragment distance, and shall remain out of the area until it has cooled for at least 24 hours.

17.8.3.2. Controlled burns will not be performed on areas known or suspected to contain CWM.

17.8.4. Technology

17.8.4.1. Explosives safety is a paramount consideration when determining the most appropriate technologies to be used to detect, excavate, remove, and dispose of UXO and other munitions that present an explosive hazard.

17.8.4.2. The use of remotely operated equipment (e.g., excavators, sifters, and shredders) or other standoff technologies (e.g., lasers) may offer the safest approach for excavating and destroying UXO and should be considered.

17.8.4.3. Subparagraph 15.5.8.3.5. addresses mechanized UXO processing operations.

Section 17G—Prescribed and Adopted Forms

17.9. Prescribed Forms.

17.9.1. AF Form 943, *Explosives Site Plan*

17.9.2. AF Form 2047, *Explosives Facility License*

17.10. Adopted Forms.

17.10.1. DD Form 626, *Motor Vehicle Inspection (Transporting Hazardous Material)*

17.10.2. DD Form 836, *Dangerous Goods Shipping Paper/Declaration and Emergency Response Information for Hazardous Materials transported by Government Vehicles*

17.10.3. AF Form 847, *Recommendation for Change of Publication*

GREGORY A. FEEST
Major General, USAF
Chief of Safety

(ACC)

SIDNEY F. MAYEUX, Colonel, USAF
Director of Safety

ATTACHMENT 1

GLOSSARY OF REFERENCES AND SUPPORTING INFORMATION

References

AFH 32-1084, *Facility Requirements,* 1 September 1996

AFI 10-2501, *Air Force Emergency Management (EM) Program Planning and Operations,* 24 January 2007

AFI 13-212, *Range Planning and Operations,* 16 November 2007

AFI 21-201, *Conventional Munitions Maintenance Management,* 11 December 2009

AFI 24-203, *Preparation and Movement of Air Force Cargo,* 13 April 2007

AFI 24-301, *Vehicle Operations,* 1 November 2008

AFI 31-101, *Integrated Defense,* 8 October 2009

AFI 31-202, *Military Working Dog Program,* 16 May 2009

AFI 32-1023, *Design and Construction Standards and Execution of Facility Construction Projects,* 19 July 1994

AFI 32-1065, *Grounding Systems,* 1 October 1998

AFI 32-1068, *Heating Systems and Unfired Pressure Vessels,* 1 Oct 1998

AFI 32-3001, *Explosive Ordnance Disposal (EOD) Program,* 10 October 2007

AFI 32-7045, *Environmental Compliance Assessment and Management Program (ECAMP),* 1 July 1998

AFI 32-9003, *Granting Temporary Use of Real Property,* 19 August 1997

AFI 33-360, *Publications and Forms Management,* 18 May 2006

AFI 37-7064, *Integrated Natural Resources Management,* 17 September 2004

AFI 90-901, *Risk Management,* 1 April 2000

AFI 91-101, *Air Force Nuclear Weapons Surety Program,* 19 December 2005

AFI 91-112, *Safety Rules for US/NATO Strike Fighters,* 9 September 2009

AFI 91-202, *The US Air Force Mishap Prevention Program,* 1 August 1998

AFI 91-205, *Non-Nuclear Munitions Safety Board,* 1 July 1998

AFMAN 32-4004, *Emergency Response Operations,* 1 December 1995

AFMAN 91-118, *Safety Design and Evaluation Criteria for Nuclear Weapons Systems,* 18 January 1994

AFOSHSTD 48-137, *Respiratory Protection Program,* 7 April 2009

AFOSHSTD 91-5, *Welding, Cutting and Brazing,* 1 May 1997

AFOSHSTD 91-100, *Aircraft Flight Line - Ground Operations and Activities,* 1 May 1998

AFOSHSTD 91-501, *Air Force Consolidated Occupational Safety Standard,* 7 July 2004

AFPAM 10-100, *Airman's Manua*l, 1 March 2009

AFPAM 90-902, *Risk Management (RM) Guidelines and Tools,* 14 December 2000

AFPD 32-30, *Explosive Ordnance Disposal,* 18 December 2009

AFPD 91-2, *Safety Programs,* 28 September 1993

AFVA 91-216, *USAF Explosives Fire and Chemical Hazard Symbols,* 1 Nov 1997

Allied Ammunition Storage and Transport Publication (AASTP)-1, Document AC/258-D/455, *Manual of NATO Safety Principles for the Storage of Military Ammunitions and Explosives*

Allowance Standard 016, *Special Purpose Clothing and Personal* Equipment, Current Edition

American Society of Civil Engineers (ASCE) 7, *Minimum Design Loads for Buildings and Other Structures,* 2006 Edition

American Society of Mechanical Engineers (ASME) Boiler and Pressure Vessel Code, Section VIII, Rules for Construction of Pressure Vessels, Division 1/Division 2, Current Edition

American National Standards Institute (ANSI) Safety Code A 14.3, *Ladders Fixed—Safety Requirements,* Current Edition

ANSI Safety Code A 156.3, *Building Exits,* Current Edition

Data Item Descriptions (DID) DI-SAFT-80931, *Explosive Ordnance Disposal Data,* Current Edition

Department of Defense (DoD) Joint Hazard Classification System (JHCS), Web Access

DoD Directive 3222.3_AFPD 33-5, *DoD Electromagnetic Environmental Effects (E3) Program,* 26 September 2006

DoD Directive 6055.9E, *DoD Explosives Safety Management and the DoD Explosives Safety Board,* August 19, 2005

DoD 4145.26-M, *DoD Contractors Safety Manual for Ammunition and Explosives,* 13 March 2008

DoD 6055.09-M, Volumes 1 – 8, *DoD Ammunition and Explosives Safety Standards,* 29 February 2008, Administratively Reissued 4 August 2010

DTR 4500.9-R (Part II, Cargo), *Defense Transportation Regulation,* October 2008

DoD Instruction 5000.02, Operations of the *Defense Acquisition System,* 8 December 2008

DoD Manual 5100.76-M, *Physical Security of Sensitive Conventional Arms, Ammunition, and Explosives,* 12 August 2000

DoD 5400.7-R, *DoD Freedom of Information Act Program,* September 1998

DoD Instruction 6055.1, *DoD Safety and Occupational Health (SOH) Program,* August 19, 1998

DoD Instruction 6055.5, Change 1, *Occupational and Environmental Health,* November, 2008

DoD Instruction 6055.16, *Explosives Safety Management Program, July 29, 2008*

AR 740-32/OPNAVINST 8070.1B/AFR 136-4/MCO 4030.25B, *Responsibilities For Technical Escort of Dangerous Materials*, June 5, 1975

DoD Instruction 6055.07, *Accident Investigation, Reporting, And Record Keeping*, April 24, 2008

Department of Defense Explosives Safety Board (DDESB) TP 10, Change 3, *Methodology For Chemical Hazard Prediction*, June 1980

DDESB TP 13, *Prediction of Building Debris for Quantity-Distance Siting*, April 1991

DDESB TP 15, *Approved Protective Construction*, June 2004

DDESB TP 18, *Minimum Qualifications for Unexploded Ordnance Technicians and Personnel*, 20 December 2004

DDESB TP 20, *Explosion Effects Software*, Current Edition

DDESB TP 16, *Methodologies for Calculating Primary Fragment Characteristics*

Joblove, 17 October 2005

GSA-TS01-2003, *Standard Test Methods for Glazing and Window Systems Subject to Dynamic Overpressure Loadings*

Military Standard (MIL-STD)-398, *Shields, Operational for Ammunition Operations, Criteria for Design and Tests for Acceptance*, 5 November 1976

Military Standard (MIL-STD)-464A, *Electromagnetic Environmental Effects Requirements For Systems*, 19 December 2002

Military Standard (MIL-STD)-882D, *Standard Practice for System Safety*, 10 February 2000

Whitacre, C. G., et al, *Personal Computer Program For Chemical Hazard Prediction (D2PC), CRDEC-TR-87021*, January 1987

Military Standard (MIL-STD)-1474D, *Noise Limits*, 29 August 1997

MIL-STD-129, *Military Marking for Shipment and Storage*, 19 September 2007

Munitions Rule (MR), Federal Register, Volume 62, page 6621, 12 February 1997

NATO AC/258 - D/258, *Safety Principles for the Storage of Ammunition and Explosives*, Current Edition

National Fire Protection Association (NFPA) 13, *Standard for the Installation of Sprinkler Systems*, 2007 Edition

NFPA 16, *Standard for the Installation of Foam-Water Sprinkler and Foam-Water Spray Systems*, 2007 Edition

NFPA 30, *Flammable and Combustible Liquids Code*, 2008 Edition

NFPA 50, *Standard for Bulk Oxygen Systems at Consumer Sites*, 2001 Edition

NFPA 70, *National Electrical Code*, 2008 Edition

NFPA 80, *Standard for Fire Doors and Other Opening Protectives*

NFPA 90A, *Standard for Installation of Air-Conditioning and Ventilating Systems*, 2002 Edition

NFPA 90B, *Standard for Installation of Warm Air Heating and Air-Conditioning Systems,* 2006 Edition

NFPA 91, *Standard for Exhaust Systems for Air Conveying of Vapors, Gases, Mists, and Non-Combustible Particulate Solids,* 2004 Edition

NFPA 101, *Life Safety Code,* 2006 Edition

NFPA 221, *Standard for Fire Walls and Fire Barrier Walls,* 2006 Edition

NFPA 251, *Standard Methods of Tests of Fire Resistance of Building Construction and Materials,* 2006 Edition

NFPA 430, *Code for the Storage of Liquid and Solid Oxidizers,* 2004 Edition

NFPA 780, *Standard for the Installation of Lightning Protection Systems,* 2008 Edition

Sections 301-312 of the Emergency Planning and Community Right-to-Know Act of 1986 (EPCRA), Public Law 99-499, Title III)(42 United States Code Sections 11001-11022)

ST/SG/AC.10/1/Revision 15, *UN Recommendations on the Transport of Dangerous Goods Model Regulations*, Fifteenth Revised Edition, United Nations, New York, 2007

Swisdak, Michael M. and Ward, Jerry W., *DDESB Blast Effects Computer - Version 5.0*, Minutes of PAPARI 2001, October 2001.

Joint Technical Bulletin (TB) 700-2 (Naval Sea Systems Command Instruction (NAVSEAINST) 8020.8B, TO 11A-1-47, and Defense Logistics Agency Regulations (DLAR) 8220.1), *Department of Defense Ammunition and Explosives Hazard Classification Procedures*, 5 January 1998

Technical Manual (TM) 5-855-1/AFPAM 32 1147(I)/NAVFAC P-1080/DAHSCWEMAN-97, *Design And Analysis Of Hardened Structures To Conventional Weapons Effects*, August 1998

Technical Order (TO) 00-5-1, *Air Force Technical Order System,* 1 October 2007

TO 00-5-3, *Air Force Technical Manual Acquisition Procedures*, 1 March 2007

TO 00-25-172, *Ground Servicing of Aircraft and Static Grounding/Bonding*, 15 July 2002

T.O. 11-1-38, *Positioning and Tie-Down Procedures – Nonnuclear Munitions*

T.O. 11A-1-33, *Handling and Maintenance of Explosives-Loaded Aircraft*

T.O. 11A-1-42, *General Instructions for Disposal of Conventional Munitions*

TO 11A-1-47, *DoD Ammunition and Explosives Hazard Classification Procedures*, 5 January 1998

T.O. 11A-1-60, *Inspection of Reusable Munitions Containers and Scrap Material*

TO 11N-B61-1, *Assembly, Test, Maintenance, and Storage Procedures; B61-3, -4, and -10,* 19 February 2007

TO 11N-B61-1A, *Assembly, Test, Maintenance, and Storage Procedures*; *B61 (Supplement), Limited-Life Component Replacement Procedures; B61-3, -4, and -10,* 19 February 2007.

TO 11N-B83-1A, *Assembly, Test, Maintenance, and Storage Procedures with Illustrated Parts Breakdown; B83-0/-1 (Supplement),* 24 May 2006.

TO 11N-20-7, *Nuclear Safety Criteria*, 2 January 2008

T.O. 11N-20-11, *General Firefighting Guidance*

TO 11N-50-1007, *Transportation Maintenance System Operator/User Manual A/S32U-42 and A/S32U-43*, 1 May 2004

T.O. 14P3-1-7, *Toxicological Protective Apron, M-2*

Title 14, Code of Federal Regulations, Part 77, *Objects Affecting Navigable Airspace*, Current Edition

Title 29 Code of Federal Regulations, Part 1910, Subpart H – *Hazardous Materials*, Current Edition

Title 40, Code of Federal Regulations, *Protection of the Environment*, Current Edition

Title 42, United States Code, *Public Health*, Current Edition

Title 49, Code of Federal Regulations, Part 171-177, Current Edition

Title 50, United States Code, *Wildlife and Fisheries*, Current Edition

U. S. Army Corps of Engineers Report HNCED-CS-98-1, *Methods for Predicting Primary Fragmentation Characteristics of Cased Explosives*, U.S. Army Corps of Engineers Engineering Support Center, Huntsville, AL, January 1998.

U. S. Army Corps of Engineers Report HNC-ED-CS-98-2, *Methods for Calculating Range to No More Than One Hazardous Fragment per 600 Square Feet*, U.S. Army Corps of Engineers Engineering Support Center, Huntsville, AL, January 1998

US Army Corps of Engineers Report HNDED-CS-93-7, *Hazard Division 1.3 Passive Structural Systems Design Guide*, July 1993

U. S. Army Corps of Engineers Report HNDED-CS-S-95-01, *Guide For Evaluating Blast Resistance Of Nonstandard Magazines*, U.S. Army Corps of Engineers Engineering Support Center, Huntsville, AL, January 1995.

UFC 3-260-01, *Airfield and Heliport Planning and Design*, 17 November 2008

UFC 3-340-02 (formally known as TM-5-1300), *Structures to Resist the Effects of Accidental Explosions*, December 5, 2008

UFC 3-520-01, *Interior Electrical System*, February 3, 2010

UFC 3-600-01, *Fire Protection Engineering for Facilities*, 26 September 2006

UFC 4-010-01, *DoD Minimum Antiterrorism Standards for Buildings*

USC 10 2692 with 1998 Authorization Act changes, Storage, *Treatment and Disposal of Non-Defense Toxic and Hazardous Materials*, Current Edition

Wilton, C., *Investigation of the Explosive Potential of the Hybrid Propellant Combinations N2O4/PBAN and CTF/PBAN*, AFRPL-TR-67-124, 1967.

Zabetakis, M. G. and Burgess, D. S., *Research on the Hazards Associated With the Production and Handling of Liquid Hydrogen*, US Department of the Interior, Bureau of Mines Report 5707, 1961

WMP1, *Air Force War Mobilization Plan*, Current Edition

Publication	**Source** (Note 4)
Tariff number BOE-6000-A, Hazardous Materials Regulations of the Department of Transportation Air, Rail, Highway, Water and Military Explosives By Water, including Specifications for Shipping (see note 1)	Association of American Railroads 1920 L Street NW Washington DC 20036
Bureau of Explosives Pamphlet No. 6 Illustrating Methods for Loading and Bracing Carload and Less-Than-Carload Shipments of Explosives and other Dangerous Articles (see note 1)	Same
Bureau of Explosives Pamphlet No. 6C, Illustrating Methods for Loading and Bracing Carload and Less-Than-Carload Shipments of Loaded Projectiles, Loaded Bombs, etc. (see note 1)	Same
Military Standard 444 (MIL-STD--444 and Definitions in the Ammunition Area (see note 2)	Naval Nomenclature Publications and Forms Center 5801 Tabor Avenue Philadelphia PA 19120
Title 42, Code of Federal Regulations Part 72.25, Etiologic Agents (see note 1)	Superintendent of Documents US Government Printing Office Washington DC 20402
Title 49, Code of Federal Regulations, Transportation (see note 1)	Same
Underwriters Laboratories Bulletin 474, Dehumidifiers (see note 1)	Underwriters Laboratories 207 East Ohio St. Chicago IL 60611
Official Air Transport Restricted Tariff No. 6D (ICAO No. 37/CAB No.82) (see note 1)	Airline Tariff Publishers Dulles International Airport PO Box 17232 Washington DC 20041

American National Standards Institute Safety Codes (see note 1)	American National Stds Institute 1430 Broadway New York NY 10018
American Society of Mechanical Engineers Standards (Eleven Sections) (see note 1)	American Society of Mechanical Engineers 345 East 47th St New York NY 10017
DoD Flight Information Pamphlet (FLIP) Enroute, Instrument Flight Rules (IFR)--Visual Flight Rules (VFR) Supplements (see note 3)	Defense Mapping Agency AeroSpace Center St Louis AFS MO 63118
Federal Acquisition Regulations (FAR) [see note 3]	
DoD Manual 4145.26, DoD Contractors Safety Manual for Ammunition, Explosives, and Related Dangerous Material (see note 3)	
Occupational Safety and Health Administration (OSHA) Standard 1910.109 (OSHA Safety and Health Standards/29 CFR 1910) [see note 3]	
Air Force Occupational Safety and Health (AFOSH) Standards [see note 3]	
National Fire Protection Association (NFPA) "National Fire Codes" (see note 1)	National Fire Protection Assn Batterymarch Park Quincy MA 02269

NOTES:

1. Available through base library.
2. Available through base master publications library.
3. Available through base publishing distribution office (PDO).
4. Some references are available through the internet.

Abbreviations and Acronyms

AAE—Arms, Ammunitions and Explosives

ADUSD (FP)—Assistant Deputy Under Secretary of Defense (Force Protection)

ADCAP—Advanced Capability

AE—Ammunition and Explosives

AECPA—Aircraft Explosives Cargo Parking Area

AFMAN—Air Force Manual

AFMC—Air Force Materiel Command

AFOSH—Air Force Occupational Safety and Health

AFRPA—Air Force Real Property Agency

AFRC—Air Force Reserve Command

AFSC—Air Force Safety Center

AGE—Aerospace Ground Equipment

AGM—Aboveground Magazine

AGS—Aboveground Structure/Site

AGS (H)—AGS, heavy wall

AGS (H/R)—AGS, heavy wall and roof

AGS (L)—AGS, light

AIT— Automatic Identification Technology

ALC—Air Logistics Center

ALCM—Air Launched Cruise Missile

AMRAAM—Advanced Medium-Range, Air-to-Air Missile

ANFO—Ammonium Nitrate/Fuel Oil

ANG—Air National Guard

ANSI—American National Standards Institute

ASHS—Assessment System for Hazard Surveys

ASME—American Society of Mechanical Engineers

ASU—Ammunition Storage Unit

AUR—All-Up-Round

AWG—American Wire Gauge

B—Barricaded

BASH—Bird/Wildlife Aircraft Strike Hazard

BATF—Bureau of Alcohol, Tobacco and Firearms

BE—Bioenvironmental Engineering

BIP—Blow-in-Place

BIT—Built-In Test

BLAHA—Basic Load Ammunition Holding Area

BLSA—Basic Load Storage Area

BRU—Bomb Rack Unit

BTO—Base Transportation Officer

CA—Chemical Agents

CADS—Cartridge Activated Device

cal/cm2—Calories per Square Centimeter

CALA—Combat Aircraft Loading Area

CAPA—Combat Aircraft Parking Area

CBGS—Confined by Ground Surface

CBM—Confined By Missile

CBR—Chemical, Biological, Radiological

CBU—Cluster Bomb Unit

CCI—Controlled, Cryptographic Items

CE—Civil Engineering

CE—Conditional Exemption

CFA—Controlled Firing Area

CFR—Code of Federal Regulations

CG—Compatibility Group

CIC—Commercial Intermodal Container

CIF—Halogen Fluorides

CINC—Commander-In-Chief

CNU—Container Unit

COB—Collocated Operating Bases

CoE—Corps of Engineers

COCO—Contractor Owned Contractor Operated

CONUS—Continental United States

CSC—Central Security Control

CSO—Concurrent Servicing Operation

CSS—Chemical Safety Submission

CWM—Chemical Warfare Materiel

DDESB—Department of Defense Explosives Safety Board

DFARS—Defense Federal Acquisition Regulations Supplement

DMM—Discarded Military Munition

DoD—Department of Defense

DoDAC—Department of Defense ammunition code

DOE—Department of Energy

DOT—Department of Transportation

DPE—Demilitarization Protective Ensemble

DUSD—Deputy Under Secretary of Defense

DUSD (I&E)—Deputy Under Secretary of Defense (Installations and Environment)

E3—Electromagnetic Environmental Effects

ECC—Emergency Communication Center

ECM—Earth-Covered Magazine

EED—Electro-Explosive Device

EID—Electrically Initiated Device

EIDS—Extremely Insensitive Detonating Substances

EIRP— Equivalent Isotropically Radiated Power

ELCG—Energetic Liquid Compatibility Group

EMCON—Emission Control

EME—Electromagnetic Environment

EMR—Electromagnetic Radiation

EOD—Explosive Ordnance Disposal

EOR—End of Runway

EPA—Environmental Protection Agency

EPCRA—Emergency Planning Community Right-To-Know Act

ERO—Engine Running on/off

ERP—Effective Radiated Power

ES—Exposed Site

ESP—Explosives Site Plan

ESQD—Explosives Safety Quantity-Distance

ESS— Explosives Safety Submission

EZ—Evaluation Zone

F—Front

FAA—Federal Aviation Administration

FAE—FuelAir Explosives

FAR—Federal Acquisition Regulation

FARP—Forward Arming and Refueling Point

FB—Front Barricaded

FLIP—Flight Information Publication

FSC— Federal Supply Class

FU—Front Unbarricaded

FUDS—Formerly Used Defense Site

GOCO—Government Owned Contractor Operated

GOV—Government Owned Vehicle

GP—General Purpose

GSA—General Services Administration

H—Heavy Wall

HA—Holding Area

HAN—Hydroxylammonium Nitrate

HARM—Hi-Speed, Antiradiation Missile

HAS—Hardened Aircraft Shelter

HC—Hexachlorethane

HD—Hazard Division

HDD—Hazardous Debris Distance

HE—High Explosive

HEI—High Explosive Encendiary

HERO—Hazards of Electromagnetic Radiation to Ordnance

HEW—High Explosive Weight

HFD—Hazardous Fragment Distance

HMMV—Highly Mobile Motorized Wheeled Vehicle

H_2O_2—Hydrogen Peroxide

HPM—High Performance Magazine

H/R—Heavy Wall/Roof

HSS—Hybrid Safety Submission

IAW—In Accordance With

IB—Inhabited Building

IBD—Inhabited Building Distance

ICBM—Intercontinental Ballistic Missile

IFR—Instrument Flight Rules

IHE—Insensitive High Explosive

IL—Intraline

ILD—Intraline Distance

IM—Intermagazine

IMD—Intermagazine Distance

IMO—International Maritime Organization

IR—Infra-Red

IRFNA—Inhibited Red Fuming Nitric Acid

ISO—International Standardization Organization

JHCS—Joint Hazard Classification System

JROD—Jet Remote Opening Device

JTF—Joint Task Force

Kg—Kilogram

kPa—Kilopascal

kV—Kilovolt

LARA—Launch Area Risk Analysis

LCF—Launch Control Facility

LCL—Less Than Carload

LEPC—Local Emergency Planning Committees

LF—Launch Facilities

LH—Liquid Hydrogen

LIMFAC—Limiting Factor

LOX—Liquid Oxygen

LP—Liquefied Petroleum

LPS—Lightning Protection System

LSRM—Large solid Rocket Motor

LSRN—Largest Single Round Net Explosive Weight for Quantity Distance

m—Meter

MAJCOM—Major Command

MCE—Maximum Credible Event

MCP—Military Construction Program

MEC—Munitions and Explosives of Concern

MEQ—Mission Essential Quantities

MER—Multiple Ejector Rack

MFD—Maximum Fragment Distance

MHE—Material Handling Equipment

MHT—Minuteman Handling Team

MILCON—Military Construction

MIL—STD—Military Standard

MILVANS—Military Vans

MK—Mark

mm—Millimeter

MME—Modern Mobile Emitter

MOD—Model

MON—Mixed Oxides of Nitrogen

MOOTW—Military Operations Other Than War

MPPEH—Material Potentially Presenting an explosive hazard

MPS—Maritime Prepositioning Ship

MR—Munitions Rule

MSA—Munitions Storage Area

MSD—Minimum Separation Distance

MWD—Military Working Dogs

MWR—Morale, Welfare, and Recreation (now known as Force Support Squadron)

NAF—Numbered Air Force

NALC—Navy Ammunition Logistic Code

NATO—North Atlantic Treaty Organization

NAVFAC—Naval Facilities Engineering Command

NEC—National Electrical Code

NEQ—Net Explosive Quantity

NEW—Net Explosive Weight

NEWQD—Net Explosive Weight for Quantity Distance

NFESC—Naval Facilities Engineering Service Center

NFPA—National Fire Protection Association

NGB—National Guard Bureau

NIN—National Identification Number

NIOSH—National Institute Occupational Safety and Health

NNMSB—Non-Nuclear Munitions Safety Board

NPW—Net Propellant Weight

NSN—National Stock Number

NWSSG—Nuclear Weapon System Safety Group

OB—Open Burning

OCE—Office, Chief of Engineers

OCONUS—Outside Continental United States

OD—Open Detonation

OI—Operating Instruction

OSHA—Occupational Safety and Health Administration

OT&E—operational test and evaluation

PACAF—Pacific Air Forces

PADS—Propellant Actuated Devices

PAL—Permissive Action Link

PAS—Protective Aircraft Shelter

PDC—Programming, Design and Construction

PES—Potential Explosion Site

PETN—Pentaerythritol Tetranitrate

PNAF—Prime Nuclear Airlift Force

POC—Point of Contact

POL—Petroleum, Oils, Lubricants

POV—Privately Owned Vehicle

PPE—Personnel Protective Equipment

psi—Pounds per Square Inch

PTR—Public Traffic Route

PTRD—Public Traffic Route Distance

PWP—Plasticized White Phosphorus

QA—Quality Assurance

QD—Quantity-Distance

R—Rear

RAMP—Requirements and Management Plan

RCRA—Resource Conservation and Recovery Act

RCS—Report Control Symbol

RCWM—Recovered CWM

RDT&E—Research, Development, Test and Evaluation

RDX—Cyclotrimethylenetrinitramine, or Dry Cyclonite

RF—Radio Frequency

RFID— Radio Frequency Identification

RFTF—Response Force Tactical Facility

RM—Risk Management

RPV—Remotely Piloted Vehicle

RSCA—Rocket Storage, Checkout, and Assembly

RSP—Render Safe Procedure

RSU—Runway Supervisory Unit

RV—Reentry Vehicle

S—Side

SAF—Secretary of the Air Force

SCBA—SelfContained Breathing Apparatus

SCPS—Survivable Collective Protection System

SD—Sympathetic Detonation

SDP—Source Data Package

SDW—Substantial Dividing Walls

SG—Sensitivity Group

SOFA—Status of Forces Agreement

SOH—Safety and Occupational Health

SOP—Standard Operating Procedures

SPO—System Program Office

SSCBM— Shipping and Storage Containers, Ballistic Missile

SSD— Surge Suppression Device

STAMP—Standard Air Munitions Package

TAPES—Toxicologic Agent Protective Ensemble, Self-Contained

TE—Transporter Erector

TEA—Triethyl Aluminum

TER—Triple Ejector Rack

TFE— Traditional Fixed-location Emitter

TLV—Threshold Limit Value

TM—Technical Manual

TNT—Trinitrotoluene

TO—Technical Order

TOFC—Trailers on Flat Cars

TP—Technical Paper

TPA—Thickened TEA

TWA—Time-Weighted Average

U—Unbarricaded

UALS—Universal Ammunition Loading System

UDMH—Unsymmetrical Dimethylhydrazine

UL—Underwriters' Laboratories

UN—United Nations

US—United States

USACE—U.S. Army Corps of Engineers

USAFE—United States Air Forces in Europe

USCENTAF—United States Central Command Air Forces

UXO—Unexploded Ordnance

VFR—Visual Flight Rules

WCDO—War Consumables Distribution Objective

WINGARD PE—Window Glazing Analysis Response and Design

WMT—Weapons Maintenance Truck

WP—White Phosphorus

WRM—War Reserve Materiel

WSA—Weapons Storage Area

WSM—Weapons Safety Manager

WST—Weapons Safety Tool

WSV—Weapons Storage Vault

Terms The following terms and phrases commonly used in explosives safety operations are described here to provide uniformity. Use standard and service dictionaries for other terms.

Aboveground Magazine—Any building or structure, except an operating building, used for the storage of explosives. Magazines are of two general types: igloo (earth-covered) and aboveground (no earth covering). An aboveground magazine is any structure or facility, without sufficient earth covering, used for the storage of explosives. For igloo see "Earth-covered

Magazine". Also includes open air munitions stocks, trucks, trailers, railcars or cargo aircraft loaded with explosives.

Aboveground Structure/Site (AGS)—Any aboveground, non-earth-covered structure/site.

Acceptor/Donor—A total quantity of stored AE may be subdivided into separate storage units in order to reduce the MCE. The separation distances between separate storage units, with or without an intervening barrier, need to be sufficient (i.e. IMD) to ensure that propagation between units does not occur. The storage unit that reacts initially is termed the donor and nearby units, which may be endangered, are termed acceptors.

Active Installation—A military installation that is currently in service and being regularly used for military activities.

Administration Area—The area in which administrative offices for the entire organization are located, excluding those offices located near and directly serving explosives storage and operating areas.

AE Aircraft Cargo Area—Any area specifically designated for:

1. Aircraft loading or unloading of transportation configured AE.

2. Parking aircraft loaded with transportation configured AE.

AE Area—An area specifically designated and set aside from other portions of an installation for the development, manufacture, testing, maintenance, storage, or handling of AE.

Aircraft Battle Damage Repair Sites—These are sites where battle damage is simulated on aircraft hulls by detonating up to two ounces of explosives packed inside a length of steel pipe.

Aircraft Explosives Cargo Parking Area—Any area, commonly called a hot cargo pad, specifically designated for parking aircraft loaded with transportation-configured explosives cargo, or those being loaded, unloaded, or awaiting loading.

Aircraft Passenger Transport Operations—Passenger transport operations are defined for the purposes of QD as follows: Passenger transport traffic involving military dependents and civilians other than those employed by or working directly for DoD Components. The following are not considered passenger transport operations:

1. Infrequent flights of base and command administrative aircraft that may, on occasion, provide some space available travel to authorized personnel.

2. Travel of direct hire appropriated funds personnel employed by any DoD Component.

3. Travel of such personnel as contractor and technical representatives traveling to or from direct support assignments at DoD installations.

Ammunition—Any munition designed to be thrust from a gun barrel by expanding gases resulting from burning propellant. Rockets would not be included in this definition.

Ammunition and Explosives (AE)—Includes, but is not necessarily limited to, all items of U.S.-titled (i.e., owned by the U.S. Government through DoD Components) ammunition; propellants, liquid and solid; pyrotechnics; high explosives; guided missiles; warheads; devices; devices, and chemical agent substances and components presenting real or potential hazards to life, property and the environment. Excluded are wholly inert items and nuclear warheads and devices, except for considerations of storage and stowage compatibility, blast, fire, and non-nuclear fragment hazards associated with the explosives.

Ammunition Storage Unit (ASU)—All types of explosives storage magazines including outdoor or indoor, open storage areas, sheds, bunkers, and earth-covered and above-ground magazines.

Anchorages—

Scuttling Site—A designated area of water for positioning a ship for its flooding or sinking under emergency situations.

Explosives Anchorage—A designated area of water used for AE loading and unloading of vessels and for anchoring vessels carrying a cargo of AE.

Auxiliary Building or Facility—Any building or facility, e.g., power plant, change house, paint and solvent locker, and similar facilities, related to or maintained and operated to serve an operating building, line, plant, or pier area. AE is not present in an auxiliary building.

Bar—This is the barometric pressure at sea level. One Bar = 14.5 psi; 3-Bar = 45 psi; 7-Bar = 100 psi.

Barge Units—See Ship or Barge Units.

Barge Piers—Piers and wharves used exclusively for loading/unloading explosives on barges or utility craft.

Barricade—An intervening barrier (natural or artificial) of such type, size, and construction as to limit the effects of low angle high velocity fragments.

Barricaded Open Storage Module—A series of connected, barricaded cells with hard surface storage pads.

Bite—A geometric limit based on a maximum glazing deflection and an assumed deflected shape.

Blast Impulse—The area under the positive phase of the overpressuretime curve.

Blast Overpressure—The pressure above ambient in a shock wave.

Bonding—A physical and electrical connection between a metal object and the LPS. This produces electrical continuity between LPS and the object and minimizes electro-magnetic potential differences. Bonding is done to prevent side-flash. Methods of bonding include mechanical, compression and thermal types.

Breakroom—A room in an operating building or a separate facility used by personnel to take breaks and eat meals.

Buddy System—At least two persons are present so that one may give assistance to the other if an emergency occurs.

Bulk Petroleum—Containerized fuel, usually in quantities of 5,000 gallons or more, and used to generate and sustain a unit's combat equipment and forces. Does not apply to fuel/gases used to support a single building or group of facilities.

Bunker Suit—Apparel that consists of trousers or overalls tucked into a pair of boots; it is designed for dressing quickly when answering an alarm.

Burning Areas—Locations sited for disposal of ammunition and explosives by burning.

Burning Reaction—The energetic material ignites and burns non-propulsively. The case may open, melt or weaken sufficiently to rupture non-violently, allowing mild release of combustion gases. Debris primarily remains within the area of the reaction. The debris is not expected to cause fatal wounds to personnel or be a hazardous fragment beyond 50 ft [15.2 m].

Catenary LPS—An LPS consisting of one or more overhead wires suspended from poles connected to a grounding system via down conductors. The objective is to intercept lightning flashes and provide a zone of protection.

Cavern Storage Site—A natural or manmade cavern adapted for the storage of AE.

Chamber Storage Site—An excavated chamber or series of excavated chambers especially suited to the storage of AE. A cavern may be subdivided or otherwise structurally modified for use as a chamber storage site.

Change House—A building for employees to change into and out of work clothes. Such buildings may be provided with sanitary facilities, drinking fountains, lockers, and eating facilities.

Classification Yard—An area used for receiving, dispatching, classifying, and switching explosives laden vehicles.

Clear Zone—The area surrounding a potential explosion site which is determined by the required inhabited building separation. The inhabited building separation will be based on the sited, waivered, exempted, or actual explosives limits of the potential explosion site, whichever is greatest.

Closure Block—A protective construction feature designed to seal the entrance tunnel to an underground storage chamber in the event of an explosion within the chamber.

Cluster Bomb/Dispenser Unit (CBU)—Usually subsets of non-robust AE that are designed to carry and dispense sub-munitions (see also Sensitivity Group). For purposes of determining case fragment distances for intentional detonations, these munitions are considered as non-robust munitions.

Cold Iron—The status of a ship that has shut down its main power plant and is dependent on shore power. A ship in cold iron is not capable of providing immediate propulsion.

Combat Aircraft Parking Area (CAPA)—Any area specifically designated for:

1. Aircraft loading or unloading of munitions.

2. Parking aircraft loaded with combat-configured munitions.

Combat Aircraft Parking Group—Two or more aircraft loaded with combat-configured explosives that are parked at less than intermagazine distance.

Combat Configured Aircraft—Any aircraft armed with explosives used for direct combat. This could be fighters, bombers, or armed cargo aircraft such as the AC-130.

Combustible Construction—Construction that uses materials that readily ignite and burn when exposed to fire (i.e. wood frame structures are an example of combustible construction).

Combustible Content—Combustible materials exceeding small quantities kept in metal/ noncombustible containers for immediate shop use, i.e. paints, solvents, lubricants, lumber, dunnage, packing material, wood/cardboard boxes, powered lawn equipment, hazardous waste, etc.

Compatibility—AE are considered compatible if they may be stored or transported together without significantly increasing either the probability of an accident or, for a given quantity, the magnitude of the effects of such an accident.

Compatibility Group (CG)—Letter designation assigned to AE to indicate what may be shipped and transported together without significantly increasing either the probability of an accident or, for a given quantity, the magnitude of the effects of such an accident.

Concurrent Operations—Two or more explosives operations within a single facility or location.

Conditional Exemption (CE)—An exemption from the regulatory definition of hazardous waste (and therefore from compliance with specific environmental requirements pertaining to the storage of hazardous waste) conditioned on compliance with certain criteria requirements, as in 40 CFR Section 266.205 (reference (am)).

Conductor—A LPS component designed to transfer the current of a lightning flash to the earth electrode system. Conductors are usually heavy metallic cables. However, metallic building structural members (e.g., steel I-beams) can also function as conductors.

Confined by Ground Surface (CBGS)—This is a failure mode of a liquid propellant launch vehicle that does include impact velocities of the liquid propellant tankage (i.e., fallback onto the pad immediately after liftoff). Propellant mixing occurs as well as ignition.

Confined by Missile (CBM)—This is a failure mode of a fueled liquid propellant launch vehicle on a launch pad in which an interior bulkhead failure occurs allowing the two propellants to come into contact. Ignition occurs, but there is effectively no impact velocity associated with mixing of the two propellants.

ConnectedChamber Storage Site—A chamber storage site consisting of two or more chambers connected by ducts or passageways. Such chambers may be at the ends of branch tunnels off a main passageway.

Constriction—Constrictions are short lengths of tunnel whose cross-sectional areas are reduced to one-half or less of the normal tunnel cross-section. Constrictions reduce the airblast effects passing through them. To be effective, constrictions should be placed within five tunnel diameters of the tunnel exit or to the entrances of storage chambers.

Container—A package designed to protect AE from hazardous environments during transportation and storage.

Contingency—An emergency involving military forces caused by natural disasters, terrorists, subversives, or by required military operations. Due to the uncertainty of the situation, contingencies require plans, rapid response, and special procedures to ensure the safety and readiness of personnel, installations, and equipment.

Counterpoise—A type of an earth electrode system consisting of conductor cables buried around the structure to be protected. Generally, a counterpoise will have more surface area contacting the earth than ground rod systems.

Dangerously Unserviceable Munition—A munition or explosives that has a critical defect identified in the specific item technical order. This defect can result is a higher probability of inadvertent activation or functioning. These may include partially or fully armed or partially expended, broken, damaged, or leaking items, etc., (not necessarily ADRs).

Debris—Any solid particle thrown by an explosion or other strong energetic reaction. For aboveground explosions, debris refers to secondary fragments. For explosions in underground facilities, debris refers to both primary and secondary fragments.

Debris Trap—A protective construction feature in an underground facility that is designed to capture fragments and debris from an explosion within the facility.

Definitive Drawing—A design (e.g., a control bunker, a 3- or 7-bar ECM, a missile test cell, or a barricade) that has been documented by a DoD Component on numbered drawings, which have been approved by the DDESB. The purpose of a definitive drawing is to provide a standard design to insure consistency in construction. Upon approval by the DDESB, there is no need for the definitive drawing to be reviewed again, provided the design has not been changed.

Deflagration—A rapid chemical reaction in which the output of heat is enough to enable the reaction to proceed and accelerate without input of heat from another source. The effect of a true deflagration under confinement is an explosion. Confinement of the reaction increases pressure, rate of reaction, and temperature and may cause transition into a detonation.

Demilitarization—To mutilate, disarm, or accomplish any other action required to prevent the further use of equipment and materiel for its original intended military or lethal purpose.

Designated Aircraft Parking Area—An aircraft parking area meeting airfield parking criteria.

Detonation—A violent chemical reaction within a chemical compound or mechanical mixture evolving heat and pressure. A detonation is a reaction or shock wave which proceeds through the reacted material toward the unreacted material at a supersonic velocity.

Deviation—Written authorization which allows a specific departure from a mandatory requirement of this regulation other than quantity-distance criteria.

Dividing Walls—These walls are one way of separating explosives into smaller groups to minimize the effects of an explosion and allow a reduction in Q-D separation. They may also be used to separate stocks of munitions to ensure compliance with compatibility requirements. To receive credit as a dividing wall, reinforced concrete walls must either meet Substantial Dividing Wall criteria or be designed in accordance with the criteria in TM5-1300, *Structures to Resist the Effects of Accidental Explosions*.

DoD Component—An organization within the Department of Defense (e.g. the US Air Force.)

DoD Explosives Operations/Storage—Explosives operations conducted by DoD, or other federal agency, under DoD oversight, procedure, or control and in accordance with the explosives safety standards of DoD 6055.09-M. This term is applicable only to DoD and federal explosives operations, and to non-DoD commercial enterprises directly supporting DoD and federal explosives contractual efforts.

DoD Explosives Safety Board (DDESB)—The DoD organization charged with promulgation of ammunition and explosives safety policy and standards, and with reporting on the effectiveness of the implementation of such policy and standards.

Donor/Acceptor—See “Acceptor/Donor”.

Down Conductor—See “Conductor”.

Dunnage—Inert material associated with the packaging, containerization, blocking and bracing of AE.

Earth-Covered Magazine (ECM)—An aboveground, earth covered structure that meets soil cover depth and slope requirements of this Standard. ECM have three possible strength designations (7-bar, 3-bar, or Undefined). The strength of an ECM’s headwall and door determines its designation.

Earth electrode system—A component of a LPS that transfers the current of a lightning flash to the earth. The earth electrode system (e.g., ground rods, counterpoise, buried metal plates, or Ufer grounds) is connected to down conductors and is in direct contact with the earth.

Electric Power House—An electric power generation facility that provides prime or stand-by auxiliary electrical power where no commercial power is available to meet operational requirements. Also called an electric power plant. A powerhouse can contain generators, fuel storage and supply, switch gear, and transformers (if required). Powerhouses supplying primary power to an installation or group of facilities are normally staffed. Power plants supplying only stand-by auxiliary power to individual facilities are usually unoccupied.

Electric Substations—The point of supply for a base electrical distribution system or portion thereof. The main substation is usually the dividing point between government facilities and those of a utility company. A substation subdivides the power supply and contains protective and control devices for the incoming supply circuit, transformers (when required), voltage

regulators, and indicating or recording instruments. A substation that has no transformers is sometimes called a switching station. (Note: Substations do not generate power.)

Electric Transformer Station—An electrical facility which converts incoming power from the distribution system to lower voltage suitable for use directly by lights, motors, and other appliances.

Electro-Explosive Device (EED)—An explosive or pyrotechnic component that initiates an explosive, burning, electrical, or mechanical train and is activated by the application of electrical energy. (JP 1-02, DoD Dictionary)

Electromagnetic Environment (EME)—The EME is the resulting product of the power and time distribution, within various frequency ranges, and includes the radiated and conducted electromagnetic emission levels that may be encountered. It is the totality of electromagnetic energy, from man made and natural sources, to which a platform/system, or subsystem/equipment will be exposed within any domain, that is, land, air, space, and sea, while performing its intended mission throughout its operational life cycle (in the case of munitions, during its stockpile-to-safe separation sequence). When defined, the EME will be for a particular time and place. Specific equipment characteristics, such as operating frequencies, emitter power levels, and receiver sensitivity, operational factors such as distances between items and force structure, and frequency coordination all contribute to the EME. In addition, transient emissions and their associated rise and fall times such as from EMP, lightning, and p-static also contribute. (MIL-HDBK-237)

Electromagnetic Environmental Effects (E3)—E3 is the impact of the EME upon the operational capability of military forces, equipment, systems, and platforms. It encompasses all electromagnetic disciplines, including electromagnetic compatibility (EMC) / electromagnetic interference (EMI); electromagnetic vulnerability (EMV); electromagnetic pulse (EMP); electronic protection (EP); hazards of electromagnetic radiation to personnel (HERP), military munitions--ordnance (HERO), and volatile materials such as fuel (HERF); and the natural phenomena effects of lightning and precipitation static (p-static). (MIL-HDBK-240)

Electrically Initiated Device (EID)—An EID is a single unit, device, or subassembly that uses electrical energy to produce an explosive, pyrotechnic, thermal, or mechanical output. Examples include: electro explosive devices (such as hot bridge wire, semiconductor bridge, carbon bridge, and conductive composition), exploding foil initiators, laser initiators, burn wires, and fusible links. (MIL-HDBK-240)

Electromagnetic Radiation (EMR)—Radiation made up of oscillating electric and magnetic fields and propagated with the speed of light. Includes gamma radiation, X-rays, ultraviolet, visible, and infrared radiation, and radar and radio waves. (JP 1-02, DoD Dictionary)

Emission Control (EMCON)—The selective and controlled use of electromagnetic, acoustic, or other emitters to optimize command and control capabilities while minimizing, for operations security: a. detection by enemy sensors; b. mutual interference among friendly systems; and/or c. enemy interference with the ability to execute a military deception plan. (JP 1-02, DoD Dictionary)

Emergency Withdrawal Distance—. Distance to which personnel are removed from an ES during an explosive accident or incident.

Energetic Liquid—A liquid, slurry, or gel, consisting of, or containing an explosive, oxidizer, fuel, or combination of the above, that may undergo, contribute to, or cause rapid exothermic decomposition, deflagration or detonation.

Energetic Materials—Energetic materials are chemical compounds, or mixtures of chemical compounds, that are divided into three groups according to use: explosives , propellants, and pyrotechnics. Explosives and propellants that have been properly initiated evolve large volumes of hot gas in a short time. The difference between explosives and propellants is the rate at which the reaction proceeds. In explosives, a fast reaction produces a very high pressure shock in the surrounding medium. This shock is capable of shattering objects. In propellants, a slower reaction produces a lower pressure over a longer period of time. This lower sustained pressure is used to propel objects. Pyrotechnics evolve large amounts of heat but much less gas than propellants or explosives. Various external stimuli can cause release of the energy contained in energetic materials. Knowing the response of individual energetic materials to specific stimuli is important from the point of view of safety. Energetic materials are sensitive to four external stimuli. These are: impact, shock, electrostatic, and thermal. Eliminating or controlling these stimuli are key to eliminating the unintentional initiation of energetic material. The focus of this Manual is on these four areas. The hazards associated with energetic material are blast, fragments, mass fire, fire and toxicity.

Engineering Controls—Management of facility operations through the use of engineering principles (e.g., facility design, operation sequencing, equipment selection, or process limitations).

Entry Control Point (ECP)—A location or facility used to control pedestrian or vehicular access to controlled or restricted areas. It is commonly found at the entrance to munitions storage areas and combat aircraft parking areas. If it is a permanent facility, it is sometimes also called a Gate House.

Essential Personnel—As used in this Manual, essential personnel are those who are required to participate in an AE operation.

Evaluation Zone—The area around an ES where the PESs, if filled to maximum capacity, could violate Q-D to that ES. (Remember a PES is also an ES). This zone determines the PESs that must be listed on the AF Form 943 for evaluation.

Exception—Is the inclusive term for any departure from the requirements of this Manual.

Exemption—A relatively long-term departure from a mandatory requirement of the quantity-distance standards of this regulation. See “Waiver”.

Expansion Chamber—A protective construction feature in an underground storage facility designed to reduce the overpressure exiting the facility by increasing the total volume of the

tunnel chamber complex. It may also function as an operating area within the underground facility or as a debris trap.

Explosion Proof—Used in referring to electrical equipment; specifically, to equipment enclosed in a case that can withstand an internal burning or explosion of elements inside the case, and can prevent ignition by spark, flash, or explosion of any outside gas or vapor surrounding the enclosure.

Explosion Reaction—Ignition and rapid burning of the confined energetic materials builds up high local pressures leading to breakup of the confining structure. Metal cases are fragmented (e.g., brittle fracture) into large pieces that are often thrown long distances. Unreacted or burning energetic materials are also thrown about. Fire and smoke hazards will exist. Air shocks are produced that can cause damage to nearby structures. The blast and high velocity fragments can cause minor ground craters and damage (e.g., breakup, tearing, gouging) to adjacent metal plates. Blast pressures are lower than for a detonation reaction.

Explosive—A substance or a mixture of substances that is capable by chemical reaction of producing gas at such temperature, pressure and speed as to cause damage to the surroundings. The term explosive includes all substances variously known as high explosives and propellants, together with igniter, primer, initiation and pyrotechnic (e.g., illuminant, smoke, delay, decoy, flare and incendiary compositions.

Explosive Accident—Accidents resulting in damage or injury from:

1. An explosion or functioning of explosive materials or devices (except as a result of enemy action).

2. Inadvertent actuation, jettisoning, and releasing or launching explosive devices.

3. Impacts of ordnance off—range.

Explosive Equivalent—The weight of a standard explosive, usually taken as TNT, required to produce a selected shockwave parameter of equal magnitude at a specific location to that produced by a unit weight of the explosive in question.

Explosives—All ammunition, munition fillers, demolition material, solid rocket motors, liquid propellants, cartridges, pyrotechnics, mines, bombs, grenades, warheads of all types, explosives elements of ejection and aircrew egress systems, air-launched missiles and those explosive components of missile systems and space systems, and assembled kits and devices containing explosive material. Explosives, explosives weight, net weight, and other like terms also refer to the fillers of an explosive item. Fillers may be explosive mixtures, propellants, pyrotechnics, and other toxic substances. This term does not include liquid fuels and oxidizers that are not used with missiles, rockets, and other such weapons or explosive items.

Explosives Area or Location—Any area or location specifically designated and set aside from other areas and used for manufacturing, testing, maintenance, storage, demilitarization, shipping and receiving, and other similar type explosives operations. Such areas may also be referred to as explosives parking or loading areas when armed or explosives-loaded aircraft are involved.

Explosives Content (of a PES)—Determination based on the type, quantity, packaging and hazard class division of the explosives present. Expressed as a net explosives weight (NEW) in pounds.

Explosives Facility—Any structure or location containing AE.

Explosives Hazard—Any condition which may result in the occurrence of an explosives mishap or contribute to the severity of an explosives mishap should one occur.

Explosives Operations Office—Any office adjacent to or within an explosives area in which operational administrative functions pertaining to explosives are performed. Also known as a field office.

Explosives Safety—A condition where operational capability, personnel, property, and the environment are protected from the unacceptable effects of an ammunition or explosives mishap.

Explosives Safety Distance (Quantity-Distance)—An expression of the quantity versus distance principle involved, or the toxic hazard distance used in determining acceptable separations between given explosives sources and given exposures to the hazard. For the purposes of this regulation, the term "Quantity-Distance" or "Q-D" will be used (see "quantity-distance").

Explosives Safety Management—A process of risk management, consisting of policies, procedures, and engineering controls, that reduces the probability and the consequences of an ammunition or explosives mishap.

Explosives Safety Submission (ESS)— A DoD Explosives Safety Board (DDESB) approved document that ensures all applicable DoD explosives safety standards are specified prior to a military munitions response activity that involves the placement of explosives on a site; the intentional physical contact with munitions and explosives of concern (MEC); or the conduct of ground-disturbing activities or other intrusive activities in areas known or suspected to contain MEC. The ESS details the scope of the project, the planned work activities, and potential hazards (including the maximum credible event), and the methods for their control to ensure material potentially posing an explosives hazard (MPPEH) is remediated to a level that is safe for current or reasonably anticipated future land use.

Explosives Site Plan—Package consisting of all information necessary to assess compliance with explosives safety standards (especially quantity-distance standards) for an explosives storage or operating location. Once approved, this package identifies storage and operational limitations, and provides a tool for management of risks associated with the storage or operating location. Note: An ESP can also be prepared for a non-explosives exposed site.

Explosives Sited Combat Aircraft Parking Area—An aircraft parking area meeting both explosives safety and airfield criteria.

Explosives Storage Area—A designated area of explosives-containing facilities set aside for the exclusive storage or "warehousing" of explosives stocks. Facilities include igloos, magazines, warehouses, operating buildings, modules, revetments, and outdoor storage pads.

Explosives—Loaded Aircraft—An aircraft is "explosives-loaded" when it carries munitions or explosives, internally or externally. The term does not include explosive components of aircrew escape systems or pyrotechnics installed in survival kits.

Exposed Explosives—Explosives that are open to the atmosphere (such as unpackaged bulk explosives, or disassembled or open components) and that are susceptible to initiation directly by static or mechanical spark, or create (or accidentally create) explosive dust, or give off vapors, fumes, or gases in explosives concentrations. This also includes exudation and explosives exposed from damaged munitions such as gun powder or rocket motors.

Exposed Site (ES)—A location exposed to the potential hazardous effects (e.g., blast, fragments, debris, or heat flux) from an explosion at a potential explosion site (PES).

Extremely Heavy Case Munitions—These munitions are defined as having a cylindrical section case weight to explosive weight ration > 9. Examples include 16” projectiles and most armor piercing (AP) projectiles. (See the Fragment Data Base located on the DDESB secure

web page to determine if a specific item is classified as an Extremely Heavy Case Munition.) For purposes of determining Sensitivity Group, Extremely Heavy Case Munitions are considered as Robust Munitions.

Extremely Insensitive Detonating Substance (EIDS)—A substance which, although capable of sustaining a detonation, has demonstrated through tests that it is so insensitive that there is a very low probability of accidental initiation.

Faraday cage—A LPS where the area to be protected is enclosed by a heavy metal screen (similar to a birdcage) or continuous metallic structure with no un-bonded metallic penetrations. Lightning current flows on the exterior of the structure, not through its interior.

Faraday-like shield—A LPS that is not an ideal Faraday Cage, but is formed by a contiguous conductive matrix that is properly bonded and grounded (e.g., electrically continuous steel arches and reinforcing bars of concrete end-walls and floors of steel arch magazines, reinforcing bars of ECM, or the metal shell of pre-fabricated "portable" magazines and metal buildings).

Field Office—See "explosives operations office."

Firebrand—A projected hot fragment, burning energetic material, or burning debris whose thermal energy is transferred to the surroundings.

Fire Retardant—Combustible materials or structures that have been treated or had surface coverings designed to retard ignition or fire spread.

Fire Wall—A wall of fire-resistive construction designed to prevent the spread of fire from one side to the other. Also referred to as a fire division wall.

Firebreaks—An area free of all readily combustible material, such as dry grass, leaves, brush or dead wood.

Fire- Resistive (Structural) —The type of construction in which the structural members, including walls, partitions, columns, floor, and roof construction are of "noncombustible" materials that either do not burn or have specific fire resistance ratings in terms of hours.

Flightline Munitions Holding Area—A designated area where munitions and components are temporarily positioned awaiting transfer to aircraft. Examples are Ready Service Igloo, Ready Service Magazine, Ready Service Module, Standard Air Munitions Package (STAMP) marshalling area, and Aerial Port of Embarkation (APOE) marshalling area.

Formerly Used Defense Site (FUDS)—Properties previously owned, leased, or otherwise possessed by the U.S. and under the jurisdiction of the Secretary of Defense; or manufacturing facilities for which real property accountability rested with DoD but operation was performed by contractors (government owned-contractor operated) and later the facilities were legally disposed.

Forward Arming and Refueling Point (FARP)—A temporary facility, organized, equipped and deployed to provide fuel and AE necessary to support aviation maneuver units in combat. The FARP permits combat aircraft to rapidly refuel and rearm and is normally located in the main battle area closer to the area of operation than the aviation unit's combat service area.

Fragment Distance—The limiting range, based on a specific density of hazardous fragments, expected from the type and quantity of explosives involved. Used in establishing certain quantity-distance (QD) criteria, a fragment is considered hazardous when it has an impact energy

of 58 foot-pounds or greater. Hazardous fragment density is a density of hazardous fragments exceeding one per 600 square feet.

Fragmentation—Fracture of AE confining cases and structures as the result of an initiation.

Fragmenting AE—Items that have cases that are designed to fragment (e.g., naturally fragmenting warheads, continuous rod warheads, items with scored cases and items that contain pre-formed fragments) (see also Sensitivity Group). For purposes of determining case fragment distances for intentional detonations, these munitions are considered as robust munitions.

Frost Line—The depth to which frost will penetrate soil (region dependent).

Gatehouse—A permanent facility used to control pedestrian and vehicular access. Sometimes referred to as an Entry Control Point (ECP) when used at the entrance to controlled or restricted areas. Gatehouses used at base entrances are sometimes called Traffic Check Houses and cannot be considered related to explosives operations.

General public—Persons not associated with a DoD installation's mission or operations (e.g., visitors, guests of personnel assigned to the installation, or persons not employed or contracted by DoD or the installation).

Government Assets—Government assets may include but are not limited to: facility, ground support equipment, airborne vehicle equipment, real property, explosives, and other items owned by the DoD and its components. It also includes property owned by NASA or other government agencies.

Grounding—Providing an electrical path to the earth or to the earth electrode system. Good grounding is a function of: the earth itself; temperature and moisture condition; an ionizing medium such as naturally occurring salts; or the volume of the earth electrode.

Ground Shock—Coupling of energy to the ground as a result of an AE reaction. Localized movement of the ground or structures in the vicinity will occur.

Guard Shelter—A location or facility located at a single PES and used solely by the person guarding the PES. It is usually a temporary structure providing protection from the weather for a single guard. An example would be a temporary one-person structure used by someone guarding a nuclear weapons-loaded aircraft.

Hardened Aircraft Shelter (HAS)—A structure designed to minimize aircraft QD separation distances and yet provide a high level of aircraft protection. Defined as being one of the following structure types addressed by this Standard:

First Generation.

TAB VEE. 24-ft [7.3 m] radius semicircular arch, 48-ft [14.7 m] wide by 100.8-ft [30.7 m] long. Double corrugated steel liner covered by a minimum of 18 inches [45.7 cm] of reinforced concrete cover. Front closure is prow-shaped and is produced when two vertically-hinged, recessed doors come together. (The closure is recessed approximately 20 feet [6.1 m] from the front of the arch, which provides a smaller internal space for aircraft.) 24-inch [61.0 cm] thick reinforced concrete rear wall, with an interior 0.1255-inch [0.3188 cm] thick steel spall plate. Rear wall has an exhaust opening (normally closed) for venting when engines are running. (Also known as a USAFE TAB VEE.)

TAB VEE Modified. 24-ft [7.3 m] radius semicircular arch, 48-ft [14.7 m] wide by 100.8-ft [30.7 m] long. Double corrugated steel liner covered by a minimum of 18 inches [45.7 cm] of reinforced concrete cover. Front closure is prow-shaped, laterally opening, external flush door. 24-inch [61.0 cm] thick reinforced concrete rear wall, with an interior 0.1255-inch [0.3188 cm] thick steel spall plate. Rear wall has an exhaust opening (normally closed) for venting when engines are running. (Same design as TAB VEE, except front closure door is redesigned and relocated to outside of arch.)

Second Generation. 29.4 ft [9.0 m] double-radius, pseudo-elliptical arch; 82 ft [25 m] wide by 124 ft [37.8 m] long. Double corrugated steel liner covered by a minimum of 18 inches [45.7 cm] of reinforced concrete cover. Front closure is a vertical reinforced concrete panel, laterally opening, sliding, external flush door. 24-inch [61.0 cm] thick reinforced concrete rear wall, with an interior 0.1255-inch [0.3188 cm] thick steel spall plate. Rear wall has an exhaust opening (normally closed) for venting when engines are running.

Third Generation. 27.4 ft [8.4 m] double-radius, pseudo-elliptical arch; 70.8 ft [21.6 m] wide by 120 ft [36.6 m] long. Double corrugated steel liner covered by a minimum of 18 inches [45.7 cm] of reinforced concrete cover. Front closure is a vertical reinforced concrete panel, laterally opening, sliding, external flush door. A personnel door is located out one side and is protected by a barricade. 24-inch [61.0 cm] thick reinforced concrete rear wall, with an interior 0.1255-inch [0.3188 cm] thick steel spall plate. Rear wall has an exhaust opening (normally closed) for venting when engines are running.

Korean TAB VEE. 24-ft [7.3 m] radius semicircular arch, 48-ft [14.7 m] wide by 100.8-ft [30.7 m] long (same dimensions and arch design as a First Generation). Double corrugated steel liner covered by a minimum of 18 inches [45.7 cm] of reinforced concrete cover. Either no front closure, or a non-hardened front closure. 18-inch [45.7 cm] thick reinforced concrete rear wall, with a 10-guage (0.1382-inch) [3.51 mm] steel liner. Rear wall has an exhaust opening (normally closed) for venting when engines are running; exhaust opening is protected only by an exterior blast deflector earth-filled steel bin barricade.

Korean TAB VEE Modified. Same as a Korean TAB VEE, except a First Generation TAB VEE or TAB VEE Modified hardened front closure has been installed.

Korean Flow-Through. 27.4 ft [8.4 m] double-radius, pseudo-elliptical arch; 70.8 ft [21.6 m] wide by 120 ft [36.6 m] long (same dimensions and arch design as a Third Generation). Double corrugated steel liner covered by a minimum of 18 inches [45.7 cm] of reinforced concrete cover. Has an open front and rear.

HAS Pair. Two side-by-side HAS with either a First, Second or Third Generation arch design, separated by a minimum 6-inch [15.24 cm] air gap. The design may be a flow-through, or may have a rear wall, or a front and rear wall.

Maintenance HAS. A First, Second, or Third Generation HAS used for non-explosive combat aircraft maintenance operations.

Hardened Aircraft Shelter (HAS) Ready Service ECM/AGM. Facility intended to provide a holding area between HAS for quick-turn munitions. Limited to 22,000 lbs [9,979 kg] NEWQD (originally based on four quick-turn loads per HAS).

Hazard Classification—Process by which hazardous materials are assigned to one of the nine U.N. recognized classes of dangerous goods.

Hazard Division (HD)—One of six divisions designating the predominant hazard within UN Class 1, Explosives.

Hazards of Electromagnetic Radiation to Ordnance (HERO)—Situations in which transmitting equipment (for example, radios, radar, electronic countermeasures, electronic counter-countermeasures, ground penetrating radar, etc.) or other electromagnetic emitting devices can generate radiation of sufficient magnitude to: induce or otherwise couple electromagnetic energy sufficient to exceed specified safety and/or reliability margins in electrically initiated devices (EID) contained within ordnance, or cause radiation-induced damage or degradation of performance in military munitions containing EID. (MIL-HDBK-240)

Hazardous Fragment or Debris—Fragments or debris having an impact energy of 58 ft-lb [79 J] or greater.

Hazardous Fragment Density—An areal number density of hazardous fragments or debris exceeding one per 600 ft^2 [55.7 m^2].

Hazardous Locations for Electrical Equipment—Locations where flammable gases or vapors are, or may be, present in an explosive or ignitable mixture, or where combustible dust or easily ignitable particles or fibers may be present.

Hazardous Operation (Space Launch)—A specific operation requiring the establishment of a Safety Control Area; nonessential personnel will be evacuated for the Safety Control Area. Range Safety designates certain functions and procedures as hazardous operations when LSRM segments are being processed. Because these operations have a greater than normal potential for causing mishaps, certain controls are implemented. A solid rocket motor segment being lifted by a crane is an example of a hazardous operation. In addition to the activation of a Safety Control

Area, these operations require supervision by people designated as the individuals responsible for safety standards compliance.

Headwall—An ECM's front wall. It is a critical feature that is directly associated with the strength designation assigned to an ECM.

Heavy Armor—Main battle tanks or other vehicles that are expected to contain fragments and reduce blast overpressure generated from an internal explosion of its AE stores.

High Explosives (HE)—An explosive substance designed to function by detonation (e.g., main charge, booster or primary explosives).

High Explosives Equivalent or TNT Equivalent—The amount of a standard explosives which, when detonated, will produce a blast effect comparable to the effect that results at the same distance from the detonation or explosion of a given amount of the material for which performance has been evaluated. It is usually expressed as a percentage of the total net weight of all reactive materials contained in the item or system. (For the purpose of this regulation, TNT is used for comparison.) See "Explosive Equivalent".

High Performance Magazine (HPM)—An earth-bermed, 2-story, box-shaped structure with internal non-propagation walls designed to reduce the MCE.

High Pressure Closure—See Closure Block.

Holding Area Munitions (HAMS)—Designated location on the flightline where built up munitions are temporarily placed pending delivery to combat aircraft or return to storage. HAMS must meet flightline munitions holding area Q-D criteria.

Holding Yard—A specified area designed or used to accommodate explosives-laden carriers before movements to a storage area or to their next destination. (Called "wharf yard" at seaports.)

Hybrid Propellants—A propellant charge using a combination of physically separated solid and liquid (or gelled) substances as fuel and oxidizer.

Hybrid Safety Submission (HSS)—An ESP containing waivers or exemptions to Q-D criteria. Once the AF accepts the risks associated with the violations, the HSS will be forwarded to the DDESB for approval of the paired relationships meeting Q-D criteria.

Hygroscopic—A tendency of material to absorb moisture from its surroundings.

Hypergolic—A property of various combinations of chemicals to self ignite upon contact with each other without a spark or other external initiation source.

Igloos (All Types)—See "Earth-covered magazine."

Improvised Explosive Device (IED)—A device placed or fabricated in an improvised manner incorporating destructive, lethal, noxious, pyrotechnic or incendiary chemicals, designed to destroy, disfigure, distract or harass. It may incorporate military stores, but are normally devised from non-military components.

Incapacitating Agent—An agent that produces temporary physiological or mental effects, or both, which will render individuals incapable of concerted effort in the performance of their assigned duties. (Excludes riot control agent.)

Incremental Distance—The distance based solely on overpressure protection (K factor) without regard to fragment protection. (Example: For 5000 pounds net explosives weight (NEW), the incremental K40/50 distance would be 685 feet instead of the 1,250 feet inhabited building (IB) distance separation required because of minimum fragment protection.)

Inert—Contains no explosives, active chemicals, or pyrotechnics, but is not necessarily noncombustible.

Inhabited Buildings—Structures, other than AE-related buildings, occupied by personnel or the General Public, both within and outside DoD establishments (e.g., schools, churches, residences, quarters, Service clubs, aircraft passenger terminals, stores, shops, factories, hospitals, theaters, mess halls, post offices, or post exchanges).

Inhabited Building Distance (IBD)—Distance to be maintained between a PES and an inhabited building.

Inspection Station—A designated location at which trucks and railcars containing AE are inspected.

Installation-Related Personnel—Military personnel (to include family members), DoD employees, DoD contractor personnel, and other personnel having either a direct operational (military or other Federal personnel undergoing training at an installation) or logistical support (e.g., vendors) relationship with installation activities.

Installed Explosives—Explosives items installed on aircraft or contained in survival kits such as flares, signals, egress system components, squibs, and detonators for jettisoning external stores, engine-starter cartridges, fire extinguisher cartridges, destructors in electronic equipment, explosives components of emergency equipment, and other such items or materials necessary for safe flight operations.

Integral Air Terminal LPS—A LPS that has strike termination devices mounted on the structure to be protected. The strike termination devices are connected to the earth electrode system via down conductors.

Integral Part of a Space Launch Facility—Any permanent structure or item in the immediate vicinity of the launch pad or test facility that directly supports launch/test operations.

Interchange Yard—An area on a DoD installation set aside for exchanging railroad cars or vehicles with a common carrier.

Intermagazine Distance (IMD)—Distance to be maintained between two AE storage locations.

Intraline Distance (ILD)—The distance to be maintained between any two AE related buildings or sites within an AE related operating line.

Intrusive Weapons Maintenance Operations—Operations which extend within the sealed case of a weapon.

Joint DoD - Non-DoD Use Runway/Taxiway—A runway or taxiway serving both DoD and commercial aircraft. A runway or taxiway serving solely DoD, DoD chartered, or NonDoD aircraft on DoD authorized business is not joint use.

Joint Hazard Classification System (JHCS)—A data base containing hazard classification and safety data for DoD AE.

Joint Storage—AE storage in a facility that includes both DoD-titled and non-DoD-titled AE. In other than ownership, the stored AE items are similar.

Joint Use Airfield—An airfield serving both DoD and commercial aircraft. An airfield serving solely DoD, DoD chartered, or non-DoD aircraft on DoD authorized business is not joint use. ATF, DOE, DEA, and other federal use aircraft are not considered commercial; therefore, joint-use standards do not apply.

Joint Use Space Launch Facility—A space launch facility serving both governmental and an authorized commercial users.

K Factor—The factor in the formula $D=KW^{1/3}$ used in QD determinations where D represents distance in ft and W is the NEW in lb. The K factor is a constant and represents the degree of protection that is provided.

Largest Single Round Net Explosive Weight for Quantity Distance (LSRN)—Equal to the largest single round NEWQD HD 1.2.3 item present. Because it is not expected that there will

be an HD 1.2.3 item with an LSRN greater than 450 pounds, and to simplify calculations, the LSRN should be capped at ≤ 450 pounds.

Launch Complex—A group of facilities used to assemble, test, check out and launch spacelift vehicles. A launch complex should include, for example, two similar launch pads, ground liquid propellant tankage, solid rocket motor facilities, etc.

Launch Mount—The load bearing base, apron, or platform upon which the centerline of a rocket, missile, or space vehicle rests during launching.

Launch Pad—The load-bearing base, apron, or platform upon which a rocket, missile, or space vehicle and its launcher rest prior to launch.

Leadless EED— Any devices which have nothing connected to them that might act as an antenna and provide a structural mechanism for the energy to be captures/coupled.

License—Formal permission to store explosives or munitions outside the sited explosives storage area.

Light Construction (Structure)—Light metal structure or concrete masonry unit (block wall) construction without concrete fill or reinforcement; example - butler type buildings.

Liquid Propellant—Energetic liquids used for propulsion or operating power for missiles, rockets, AE and other related devices.

Loading Density (w)—Quantity of explosive per unit volume expressed as lbs/ft^3 [kg/m^3].

Loading Docks—Facilities, structures, or paved areas used for transferring AE between modes of transportation.

Lunchroom—Facilities where meals may be distributed by food service personnel or brought by operating personnel for consumption. It may serve more than one PES.

Magazine—Any building or structure, except an operating building, used for the storage of explosives. Magazines are of two general types: igloo (earth-covered) and aboveground (no earth covering). An aboveground magazine is any structure or facility, without sufficient earth covering, used for the storage of explosives. For igloo see “Earth-covered Magazine.”

Magazine Area—Same as "Explosives Storage Area."

Major Weapons Maintenance Operations—Disassembly or the performance of any maintenance operations, as currently approved, that breaches the “minimum configuration” providing “appropriate lightning protection” or which could result in exposure of the weapon’s internal components to electrical energy of any kind. Major maintenance operations do not include Permissive Action Link (PAL) procedures.

Marshalling Yard—A designated area near a port facility where a unit or activity consolidates their equipment and prepares for movement.

Mass Explosion—Explosion that affects almost the entire quantity of AE virtually instantaneously.

Mass—Detonating Explosives—High explosives, black powder, certain propellants and pyrotechnics, and other similar explosives. They may be alone or in combination, or loaded into various types of ammunition or containers. Most of the entire quantity can explode

instantaneously when a small portion is subjected to fire, to severe concussion or impact, to the impulse of an initiating agent, or to the effect of a considerable discharge of external energy. Such an explosion will generally cause severe structural damage to adjacent objects. The explosion may cause detonation of other items of ammunition and explosives stored near enough to (and not adequately protected from) the initially exploding pile, so that the two or more quantities must be considered as one for quantity-distance (Q-D) purposes.

Mast LPS—A LPS that consists of one or more poles with a strike termination device connected to an earth electrode system by down conductors. Its purpose is to intercept lightning flashes and provide a zone of protection.

Material Potentially Presenting an Explosive Hazard (MPPEH)— Material that, prior to determination of its explosives safety status, potentially contains explosives or munitions (e.g., munitions containers and packaging material; munitions debris remaining after munitions use, demilitarization, or disposal; and range-related debris); or potentially contains a high enough concentration of explosives such that the material presents an explosive hazard (e.g., equipment, drainage systems, holding tanks, piping, or ventilation ducts that were associated with munitions production, demilitarization or disposal operations). Excluded from MPPEH are munitions within the DoD established munitions management system and other hazardous items that may present explosion hazards (e.g., gasoline cans, compressed gas cylinders) that are not munitions and are not intended for use as munitions.

Maximum Credible Event (MCE)—In hazards evaluation, the MCE from a hypothesized accidental explosion, fire, or toxic chemical agent release (with explosives contribution) is the worst single event that is likely to occur from a given quantity and disposition of AE. The event must be realistic with a reasonable probability of occurrence considering the explosion propagation, burning rate characteristics, and physical protection given to the items involved. The MCE evaluated on this basis may then be used as a basis for effects calculations and casualty predictions.

Maximum Fragment Distance— The calculated maximum distance to which any fragment from the cylindrical portion of an AE case is expected to be thrown by the design mode detonation of a single item. This distance does not address fragments produced be sections of nose plugs, base plates, boattails, and/or lugs. These special fragments, from the non-cylindrical portions of the AE case, can travel to significantly greater distances (i.e., >10,000 ft) than the calculated maximum distances. The maximum fragment distance may also be the measured distance, based on testing, to which any fragment from an AE item is thrown.

Military Munitions—All ammunition products and components produced or used by or for the U.S. DoD or the U.S. Armed Services for national defense and security, including military munitions under the control of the Department of Defense, the U.S. Coast Guard, the U.S. DOE, and the National Guard personnel. The term "military munitions" includes confined gaseous, liquid, and solid propellants, explosives, pyrotechnics, chemical and riot control agents, smokes, and incendiaries used by the DoD Components, including bulk explosives and chemical warfare agents, chemical munitions, rockets, guided and ballistic missiles, bombs, warheads, mortar rounds, artillery ammunition, small arms ammunition, grenades, mines, torpedoes, depth charges, cluster munitions and dispensers, demolition charges, and devices and components thereof. "Military munitions" do not include wholly inert items, improvised explosive devices, and nuclear weapons, nuclear devices, and nuclear components thereof. However, that term does

include non-nuclear components of nuclear devices, managed under the DoE's nuclear weapons program, after all required sanitizing operations under the "Atomic Energy Act of 1954," as amended, have been completed (40 CFR Section 260.10, reference (am)).

Mishap—An accident or an unexpected event involving DoD ammunition and explosives.

Mitigation—A feature that reduces, limits or controls the consequences of an AE reaction.

Modules—A barricaded area composed of one or more connected cells (revetments) with hard surface storage pads separated from one another by the prescribed barricade. A light metal building may be used in individual cells.

Munitions—See "Explosives."

Munitions-related Operations Road—Any on-base road used only by personnel involved in munitions-related operations such as flight line service roads supporting combat and hot cargo aircraft operations; roads outside the MSA used by security forces supporting MSA operations; roads inside the MSA; roads around the combat aircraft parking area used strictly to support combat aircraft operations. These roads are exempt of QD criteria.

Munitions Residue—Includes scrap powder, initiating or sensitive explosives, sweepings from explosive operations, and explosive contaminated rags.

Navigable Streams—Those parts of streams, channels, or canals capable of being used in their ordinary or maintained condition as highways of commerce over which trade and travel are, or may be, conducted in the customary modes. Streams that are not capable of navigation by barges, tugboats, and other large vessels are not included, unless they are used extensively and regularly for the operation of pleasure boats.

Net Explosive Quantity (NEQ)—NEW expressed in kg.

Net Explosive Weight (NEW)—The total quantity, expressed in pounds, of explosives material or pyrotechnics in each item or round.

Net Explosive Weight for QD (NEWQD)—The total quantity, expressed in pounds [kilograms], of high explosives equivalency in each item or round to be used when applying QD criteria or other standards. The NEWQD is equal to the NEW unless hazard classification testing has shown that a lower weight is appropriate for QD purposes. (**Note**: If the NEWQD is less than the NEW, the reason is usually that propellant or other substances do not contribute as much to the blast effect as the same amount of high explosive would.)

New Construction—For the intended purpose of this Manual "new construction" is the introduction of any facility "portable, temporary or permanent" inside the IB and must have an explosives site plan accomplished and approved before authorizing construction or positioned in place.

Nitrogen Padding (or Blanket)—The nitrogen filled void or ullage of a closed container used to prevent oxidation or to avoid formation of a flammable mixture, or a nitrogen atmosphere in or around an operation or piece of equipment.

Non-combustible Construction—Construction that uses materials that do not readily ignite and burn when exposed to fire (i.e. concrete, masonry, and metal structures are examples of non-combustible construction).

NonDoD Components—Any entity (government, private, or corporate) that is not a part of the DoD.

Non-DoD Operations/Storage—Explosives operations/storage conducted on DoD property in accordance with Table 12.29, BATF, FAA or other federal, state, and local explosives safety requirements. Under these type operations, DoD will be responsible only for insuring IM standards are met as outlined in explosives site plan submissions. This does not constitute "DoD oversight" as intended in the definition of "DoD Operations/Storage."

Non-Essential Personnel—As used in this Manual, non-essential personnel are those who are not required to participate in an AE operation.

Non-explosives Related Facility—Air Force-owned facility where administrative functions or operations are conducted that provide direct support to an Air Force explosives area or explosives operation.

Non-Robust Munitions—Those HD 1.1 and HD 1.2 AE that are not categorized as SG 1, SG 3, SG 4, or SG 5. Examples of Non-Robust Munitions include torpedoes and underwater mines (see also Sensitivity Group). For purposes of determining case fragment distances for intentional detonations, non-robust munitions are those munitions not meeting the definition of robust munitions.

Nuclear Weapon—A complete assembly (i.e., implosion type, gun type, or thermonuclear type) in its intended ultimate configuration which, upon completion of the prescribed arming, fuzing, and firing sequence, is capable of producing the intended nuclear reaction and release of energy. (JP1-02)

Occupied Facility—A facility where personnel are usually present. Includes maintenance facilities, field offices, administrative facilities, etc. An occupied facility may at any given time not have personnel present. (See unoccupied facility.)

Operating Building—Any structure, except a magazine, in which operations associated with AE are conducted (e.g., manufacturing, processing, handling, loading, or assembling).

Operating Line—A group of buildings, facilities, or related workstations so arranged as to permit performance of the consecutive steps of operations associated with AE (e.g., manufacture, loading, assembly, modification, or maintenance).

Operating Location—A building, facility, or site in which operations pertaining to the manufacturing, processing, handling, or assembling of ammunition and explosives are done. This includes preload facilities for aircraft multiple and triple ejector racks. However, flightline explosives loading activities are defined as "explosives areas or locations" are not operating locations.

Operational Shield—A barrier constructed at a particular location or around a particular machine or operating station to protect personnel, material, or equipment from the effects of a localized fire or explosion.

Ordnance—Explosives, chemicals, pyrotechnics, and similar stores (e.g., bombs, guns and ammunition, flares, smoke, or napalm).

Outdoor Storage Sites—An open location selected within an explosives area or location for storage of explosive items or components.

Overpressure—The pressure, exceeding the ambient pressure, manifested in the shock wave of an explosion.

Packaging, Inner and Outer—Material used to surround and protect substances and articles during transportation and storage. They are generally made of lightweight materials such as fiberboard or fiberglass.

Passenger Railroad—Any steam, diesel, electric, or other railroad that carries passengers for hire.

Pier—A landing place or platform built into the water, perpendicular or oblique to the shore, for the berthing of vessels.

Portal Barricade—A barricade that is placed in front of an entrance into an underground storage facility. Its function is to reflect that portion of the shock wave moving directly outward from the entrance, thereby, reducing the pressures along the extended tunnel axis and increasing the pressures in the opposite direction. The result is a more circular IBD area centered at the portal.

Potential Explosion Site (PES)—The location of a quantity of AE that will create a blast, fragment, thermal, or debris hazard in the event of an accidental explosion of its contents.

Primary fragment—A fragment from material in intimate contact with reacting AE.

Prohibited Area—A designated area at airfields, seadromes, or heliports where AE facilities are prohibited.

Prompt Propagation—See “Simultaneous Detonation.”

Propagating Explosion—The communication of an explosion (detonation or deflagration) from one potential explosion site to another by fire, fragment, or blast (shock wave), where the interval between explosions is long enough to limit the total overpressure at any given time to that which each explosion produces independently. This condition, where detonation occurs, would be evidenced by a distinct shock wave from each detonation, with a discernible pressure drop between each explosion (see "simultaneous detonation").

Public Exclusion Distance—The calculated distance from the toxic chemical agent source at which no more than 10.0, 4.3, and 150 milligrams per minute per cubic meter is present for GB, VX, and mustard, respectively, or the explosives safety IBD, whichever is greater.

Public Highway—Any public street, road, or highway used by the general public for vehicular traffic.

Public Traffic Route (PTR)—Any public street, road, highway, navigable stream, or passenger railroad, including roads on a military reservation that are used routinely by the general public for through traffic.

Public Traffic Route Distance (PTRD)—Distance to be maintained between a PES and a PTR exposure.

Quantity-Distance (QD)—The quantity of explosive material and distance separation relationships that provide defined levels of protection. The relationships are based on levels of risk considered acceptable for specific exposures and are tabulated in applicable QD tables.

These separation distances do not provide absolute safety or protection. Greater distances than those in the QD tables should be used if practical.

Radially Aligned—Two missiles are radially aligned if the fragment pattern from either warhead intersect (90° angle) the other warhead.

Railroad—See "Passenger Railroad."

Ready Ammunition Storage—A location where AE is stored for near term tactical or training use.

Ready Service Storage Facility—Holding area for ammunition and explosives limited to a maximum NEW of 22,000 lbs, located between hardened aircraft shelters.

Real Property—Lands, buildings, structures, utilities systems, improvements and appurtenances thereto. Includes equipment attached to and made part of buildings and structures (such as heating systems) but not moveable equipment (such as plant equipment)

Reinforced Concrete Walls—These concrete walls vary in thickness, but are at least 12 inches thick and constructed as specified in TM5-1300. Concrete compressive strength must be 2,500 psi or greater.

Related Activity—Activities directly associated with munitions storage or operations.

Related Facility—Any non-explosives facility closely supporting a PES. It does not include utilities.

Residue—See "Munitions Residue."

Responsible Commander—The commander(s) having responsibility for the resources under consideration.

Revetment—Barricades constructed to limit or direct a blast to reduce damages from low flying fragments and limit simultaneous detonation. Often used to form modules for open storage of munitions or protected aircraft parking.

Riot Control Agent—A chemical that produces temporary irritating or disabling effects when in contact with the eyes or when inhaled.

Risk—The product of the probability or frequency that an accident will occur within a certain time and the accident's consequences to people, property or the environment.

Risk Assessment—A method of determining and documenting hazards which may be present and controls for mitigating or eliminating those hazards.

Robust Munitions—AE that meet two of the following criteria:

1. Have a ratio of the explosive weight to empty case weight less than 1.00.

2. Have a nominal wall thickness of at least 0.4 in [10 mm].

3. Have a case thickness/$NEW^{1/3}$ > 0.05 in/$lb^{1/3}$. [0.165 cm/$kg^{1/3}$].

Examples of Robust Munitions include 20 mm, 25 mm, and 30 mm cartridges, GP bombs, artillery projectiles, and penetrator warheads. (See also Sensitivity Group.) For purposes of determining case fragment distances for intentional detonations, Robust Munitions are those that meet the definition above, or meet the definition of Fragmenting Munitions. (See also Extremely Heavy Case Munitions and Fragmenting Munitions.)

Rock Strength—Designations (e.g., strong, moderately strong or weak rock) that provide a general classification of rock types.

Runway—Any surface on land designated for aircraft takeoff and landing operations, or a designated lane of water for takeoff and landing operations of seaplanes.

Safe Haven—Temporary storage granted to DOE classified shipment transporters at DoD facilities in order to assure the safety and security of nuclear material and/or nonnuclear classified material. It also includes parking for commercial vehicles containing HD 1.1 or 1.3 explosives.

Secondary Fragment—Fragments produced by the impact of primary fragments or airblast into surrounding structures, AE or earth.

Secretarial Exemptions or Certifications—A written authorization granted by the Service Secretary for strategic or other compelling reasons that permits long-term noncompliance with a mandatory requirement of DoD explosives safety criteria.

Secure Explosives Holding Area—An area designated for the temporary parking of commercial carriers' motor vehicles transporting DoD-owned AA&E. (See Part 205 of reference (ab)).

Secure Non—explosives Holding Area—An area designated for the temporary parking of commercial carriers' motor vehicles transporting Categorized DoD Arms, classified (SECRET or CONFIDENTIAL) materials, and CCI. (See Part 205 of reference (ab)).

SD Sensitive Munitions: Munitions for which HPM non—propagation walls are not effective. AE are assigned this category when either very sensitive to propagation or the sensitivity has not been determined.

Sensitivity Group (SG)—A category used to describe the susceptibility of HD 1.1 and HD 1.2 AE to sympathetic detonation (SD) for the purpose of storage within a HPM, or where Armco, Inc. revetments or SDW are used to reduce MCE. Each HD 1.1 and HD 1.2 munition is designated, based on its physical attributes, into one of five SG (the SG can be found in the JHCS); directed energy weapons are further identified by assigning the suffix “D” following the SG designation. The SG are:

SG1 – Robust munitions (see Robust Munitions).

SG2 – Non-robust munitions (see Non-Robust Munitions).

SG3 – Fragmenting munitions (see Fragmenting Munitions).

SG4 – CBU weapons (see Cluster Bomb/Dispenser Unit munitions).

SG5 – SD Sensitive Munitions. Munitions for which HPM non-propagation walls are not effective. Munitions are assigned to SG5 when either very sensitive to propagation or the sensitivity has not been determined.

(NOTE: For purposes of determining case fragment distances for intentional detonations, SG1 items will be either Robust or Extremely Heavy Case Munitions, SG3 items are

considered Robust Munitions, and SG2, SG4, and SG5 munitions are considered Non—Robust Munitions).

Service Magazine—An auxiliary building servicing an operation used for the intermediate storage of explosives.

Shared Launch Facility—Any space or orbital launch facility that supports both DoD and non-DoD launch services and operations, as determined by the DoD Component involved or by mutual agreement when multiple DoD Components are involved.

Ship or Barge Units—Combination of AE ships (including submarines at berth), barges or piers/wharves not separated by required IMD.

Sideflash—The phenomenon where lightning current will arc through a non-conductive medium in order to attach to other objects. An electrical spark caused by differences of potential that occurs between conductive metal bodies or between such metal bodies and a component of the LPS or earth electrode system.

Simultaneous Detonation—The detonation of two or more items that are near each other, with one item detonating after the next, and with such short intervals between detonations, that the overall detonation appears to have emanated from a single item. Pressures produced by these independent detonations grow together (coalesce) within very short distances from their sources to cause peak overpressures greater than that of each independent source. Preventing simultaneous detonation is equivalent to providing intermagazine distance.

Single-Chamber Storage Site—An excavated chamber with its own access to the natural ground surface that is not connected to any other storage chamber.

Source Emission Limits—The amount of toxic chemical agent that may be released at a particular point that allows for natural dilution, ventilation, and meteorological conditions.

Spall—The material broken loose from any surface of an acceptor chamber or cell by a shock wave transmitted through the wall. Spall is also used to describe this process.

Staging for Space Launch—Staging of LSRM segments refers to a condition/configuration of the Solid Rocket Motor (SRM), while it remains in the Motor Operations and Staging Facility, until the launch complex is ready to receive it.

Standoff distance—Minimum separation distance between a wall or barrier and the edge a stack of AE.

Static Missile Battery—Deployed ground-based missiles meant to be employed in a non-mobile mission for offensive or defensive purposes.

Static Test Stand—Locations at which liquid energetic engines or solid propellant motors are tested in place.

Strike Termination Device or System—A component or feature of a LPS intended to intercept lightning strikes. They may include overhead wires or grids, air terminals, or a building's grounded structural elements.

Substantial Dividing Walls—These walls are normally used between bays to prevent propagation of an explosion from one bay to the other. They provide limited personnel protection. They are made of reinforced concrete at least 12 inches thick. The reinforcing

consists of #4 bars (1/2 inch), or larger, on 12 inch centers each way on each wall face. The bars on the two wall faces are staggered with respect to each other. For example, vertical bars on one face start 12 inches from the end and on the other face they start 6 inches from the end. Similarly, horizontal bars on one face start 12 inches from the floor and on the other face they start 6 inches from the floor.

Support Facilities—Facilities that support AE operations (e.g., field offices, AE support equipment maintenance, forklift charging stations, dunnage storage, or inert storage buildings).

Surge Suppression/Protection—The attenuation, suppression or diversion of lightning induced electrical energy to ground.

Suspect Truck and Railcar Holding Areas—A designated location for placing motor vehicles or railcars either containing AE that are suspected of being in a hazardous condition or motor vehicles or railcars that may be in a condition that is hazardous to the AE.

Sympathetic Detonation (SD)—The detonation of AE produced by the detonation of adjacent AE.

Tactical Facilities—Prepared locations with an assigned combat mission (e.g., missile launch facilities, alert aircraft parking areas, or fixed gun positions).

Taxiway—Any surface designated as such in the basic airfield clearance criteria specified by a DoD Component publication or Federal Aviation Regulation.

Technical Support Area for Space Launch—A personnel work station located inside a Motor Operations and Storage Facility, or an explosives operating facility. It provides a work location for test team personnel who are directly supporting the day-to-day operations, which involve explosive components.

Toxic Chemical Agent—A substance that is intended for military use with lethal or incapacitating effects upon personnel through its chemical properties. Excluded from toxic chemical agents for purposes of this Standard are riot control agents, chemical herbicides, smoke- and flame-producing items, and individual dissociated components of toxic chemical agent munitions.

Toxic Chemical Agent Accident—Any unintentional or uncontrolled release of a toxic chemical agent when, as follows:

1. Reportable damage occurs to property from contamination, or costs are incurred for decontamination.

2. Individuals exhibit physiological symptoms of toxic chemical agent exposure.

3. The toxic chemical agent quantity released to the atmosphere is such that a serious potential for exposure is created by exceeding the applicable AEL for unprotected workers or the general public or property.

Toxic Chemical Agent MCE—The hypothesized maximum quantity of toxic chemical agent that could be accidentally released from AE without explosive contribution, bulk container, or process as a result of a single unintended, unplanned, or accidental occurrence. It must be realistic with a reasonable probability of occurrence.

Toxic Chemical Munitions—AE that through its chemical properties, produces lethal or other damaging effects to human beings, except that such term does not include riot control agents, chemical herbicides, smoke and other obscuration materials (40 CFR Section 266.201 and 50 USC Section 1521 (j) (1))

Transportation Mode—Any in-transit movement of explosives by any mode (rail, highway, air or water) except movement by Munitions Material Handling Equipment.

Ufer Ground—An earth electrode system that consists of solid conductors encased along the bottom of a concrete foundation footing or floor and is in direct contact with earth.

Underground Storage Facility—Underground Storage Facilities may consist of a single chamber or a series of connected chambers and other protective construction features. The chambers may be either excavated or natural geological cavities.

Unexploded Ordnance (UXO)—Explosive ordnance which has been primed, fuzed, armed or otherwise prepared for action, and which has been fired, dropped, launched, projected or placed in such a manner as to constitute a hazard to operations, installations, personnel or material and remains unexploded either by malfunction or design or for any other cause.

Unit Risk—The risk to personnel or facilities that is associated with debris, fragment or blast hazards that is the result of the detonation of a single round of AE.

United States (US)—The States, the District of Columbia, the Commonwealth of Puerto Rico, the U.S. Virgin Islands, Guam, American Samoa; and the Commonwealth of The Northern Mariana Islands, Johnston Atoll, Kingman Reef, Midway Island, Nassau Island, Palmyra Island, Wake Island and any other territory or possession over which the United States has jurisdiction, and associated navigable waters, contiguous zones, and ocean waters of which the natural resources are under the exclusive management authority of the United States.

Unoccupied Facility—A facility where personnel are not usually present. Includes magazines, unmanned sewerage treatment plants, hardened aircraft shelters, etc. An unoccupied facility may at any given time have personnel present. (See occupied facility.)

Utilities—Utilities include water, natural gas, steam, air lines, electrical lines, communication lines and environmental facilities or equipment. The term "Utility" does not apply to services provided to individual or group explosives facilities when that service is not also secondarily provided to other parts of the installation or community (this includes underground POL lines servicing hardened aircraft shelters).

Vulnerable Construction—Buildings of vulnerable construction (e.g., schools, high-rise buildings, restaurants, large warehouse-type retail stores) are of three main types:

1. Buildings of curtain wall construction that have four stories or more and are constructed with external non-load bearing panels on a separate sub-frame that are supported off the structural frame or floors for the full height of the building.

2. Buildings of largely glass construction that have four stories or more and have at least 50 % of their wall areas glazed.

3. The third type of vulnerable construction is impracticable to define precisely. This covers any large building that employs non load-bearing cladding panels. Definition of

this type of construction cannot be more precise because of the variation in types of modern structures

Warehouse—These are facilities for storing material and supplies where personnel are infrequently present. The material may, or may not be associated with ammunition and explosives. Facilities must be sited as warehouses if they are used to store inert munitions components which are part of the accountable munitions stockpile.

Waste Military Munition—Military munitions are waste when they are solid or hazardous waste under the regulations (42 U.S.C. 9601, et seq., reference (ao)) implementing the Resource Conservation and Recovery Act (RCRA) Subpart EE of Part 264 of 40 CFR, reference (am), or defined as a waste under a DoD Component's written procedures. Waste military munitions are defined in Section 266.202 of 40 CFR, reference (am).

Note: Decisions about whether specific munitions are or are not waste should be made with reference to Section 260.10 and Sections 266.200 through 266.206 of 40 CFR, reference (am).

1. An unused military munition is a solid waste when any of the following occurs:

1.1. The munition is abandoned by being disposed of, burned, detonated (except during intended use), incinerated, or treated before disposal;

1.2. The munition is removed from storage in a military magazine or other storage area for the purpose of being disposed of, burned, or incinerated, or treated prior to disposal;

1.3. The munition is deteriorated or damaged (e.g., the integrity of the munition is compromised by cracks, leaks, or other damage) to the point that it cannot be put into serviceable condition, and cannot reasonably be recycled or used for other purposes; or,

1.4. An authorized military official has declared the munition a solid

Note: Declaration by an "authorized military official" that munitions are waste (Section 266.202(b)(4) of 40 CFR, reference (am)) has a very limited meaning and applicability. The only example is a declaration by the Army in 1984 that M55 rockets are waste. The Environmental Protection Agency expects that such a declaration would be in writing. A decision that munitions are unserviceable, or that they are to be transferred into a demilitarization account does not, by itself, constitute a decision that the munitions are solid waste.

2. A used or fired military munition is a solid waste, if as follows:

2.1. When transported off range or from the site of use, where the site of use is not a range, for the purposes of storage, reclamation, treatment, disposal, or treatment before disposal; or,

2.2. If recovered, collected, and then disposed of by burial, or land filling either on or off a range.

3. For the RCRA (Section 1004(27) of reference (am)), a used or fired military munition is a solid waste, and, therefore, is potentially subject to RCRA corrective action authorities under Section 3004(u) and 3004(v), and 3008 (h) of reference (am), or, imminent and substantial endangerment authorities under Section 7003, of reference (am) if the munition lands off-range and is not promptly rendered safe and/or retrieved. Any imminent and substantial threats associated with any remaining material must be addressed. If remedial action is not possible, the operator of the range must maintain a record of the event for as long as any threat remains. The record must include the type of munition and its location (to the extent the location is known). (For further clarification see 40 CFR Section 266.202 of reference (am) under "Definition of Solid Waste.") waste.

Wharf—A landing place or platform built into the water or along the shore for the berthing of vessels.

Wharf Yard—An AE area close to a pier or wharf where railcars or trucks are temporarily held in support of pier or wharf operations.

Wingwall—A wall located on either side of an ECM's headwall. It may slope to the ground or may join a wingwall from an adjacent ECM. It may be monolithic (of single construction) or separated by expansion joints from the headwall. The purpose of a wingwall is to retain the earth fill along the side slope of an ECM.

With its own means of initiation—An AE item with its normal initiating device, such as a detonator or detonating fuze, assembled to it or packed with it, and this device is considered to present a significant risk during storage and transport, but not one great enough to be unacceptable.

Without its own means of initiation—An AE item without its normal initiating device assembled to it or packed with it. The term also applies to an AE item packed with its initiating device, provided the device is packed so as to eliminate the risk of causing detonation of the AE item in the event of accidental functioning of the initiating device. In addition, the term applies to an AE item assembled with its initiating device provided there are protective features such that the initiating device is very unlikely to cause detonation of the AE item under conditions that are associated with storage and transport. For hazard classification purposes, a means of initiation that possesses two independent effective protective features is not considered to present a significant risk of causing the detonation of an AE item under conditions associated with storage and transport.

Zone of protection—The space beneath the LPS that is substantially immune to direct lightning.

Attachment 1 (ACC)

GLOSSARY OF REFERENCES AND SUPPORTING INFORMATION

References

AFI 11-209, *Aerial Event Policy and Procedures*, 4 May 2006
AFI 21-101_CAF SUP, *Aircraft and Equipment Maintenance Management*, 28 December 2010
AFMAN 33-363, *Management of Records*, 1 March 2008
AFMAN 91-201, *Explosives Safety Standards*, 12 January 2011
DoD 6055.9-STD, *DoD Ammunition and Explosives Safety Standards*, 29 February 2008
T.O. 6OA-2-1-3-2, U.S. Dearmer, Disposable, Fabrication, Operation and Maintenance, 25 November 1991

Abbreviations and Acronyms

AAR--After Action Report
ACC--Air Combat Command
AFRIMS--Air Force Records Information Management System
BDOC--Base Defense Operations Center
COS--Chief of Safety
DRU--Direct Reporting Unit
HC/D--Hazard Class/Division
HHQ--Higher headquarters
HQ ACC/A4W--Munitions Division
HQ ACC/A7SO--Security Forces Operations
HQ ACC/A7XE--Explosive Ordnance Disposal Branch
HQ ACC/A7XF--Fire and Emergency Services Branch
HQ ACC/SEW--Weapons Safety Branch
IG--Inspector General
PL--Protection Level
RDS--Records Disposition Schedule
USAF--US Air Force

Adopted Forms

AF Form 847, *Recommendation for Change of Publication*

Attachment 2

SAMPLE EXPLOSIVES SITE PLAN TRANSMITTAL LETTER.

MEMORANDUM FOR NAF/SEW

FROM: 3415 TTW/CC
867 Bourbon St
Lowry AFB, CO 80230-5309

SUBJECT: Explosives Site Plan (ESP) Submission, ATC-LOWRY-10-S001, WITH EXCEPTIONS, Above Ground Magazine (AGM) 433, Lowry Air Force Base, CO

1. Request routine processing and final approval of subject site plan for increasing net explosives weight for quantity distance (NEWQD) limits for an existing AGM. Once approved, this ESP replaces ESP ATC-LOWRY-87-S008. This facility does not comply with all explosives safety standards. There are exceptions associated with this ESP. This ESP has been coordinated with the base comprehensive plan; there are no future plans that impact this ESP. The following information is provided for analysis purposes.

a. This ESP sites an AGM for storage of AE. The requested NEWQD for each hazard division (HD) is as follows:

Facility	***HD 1.1***	***HD 1.2.1***	***HD 1.2.2***	***HD 1.2.3***	***HD 1.3***	***HD 1.4***
433	2,500	800≤99	125,000	(06) 125,000≤450	125,000	Capacity

b. The attached AF Form 943 and map documents all paired potential explosion site (PES) and exposed site relationships within the inhabited building distance (IBD) clear zone.

c. This ESP was accomplished using Assessment System for Hazard Surveys II, Version 2480, Database 60.

d. The required evaluation zone (EZ) of 874 feet falls within the IBD clear zone, therefore is not depicted on the location map. The EZ was based on K11 for 500,000 pounds NEWQD of HD 1.1 in accordance with AFMAN 91-201, Table 14.1.

e. A glass breakage survey determined there are occupied facilities containing windows within IBD of this magazine. Analyses revealed no risk to personnel from glass breakage. Detailed analyses are attached.

f. There are no electro-magnetic radiation hazards to AE at this magazine.

g. A lightning protection system (LPS) is installed. The LPS meets all criteria within AFMAN 91-201, Chapter 5. Drawings are attached.

h. Mixing quantities of HD 1.1, 1.2.x and 1.3 AE will comply with the requirements of DoD 6055.9-M, Volume 1.

i. This ESP has been coordinated with all applicable agencies. There are no tenant units exposed by this magazine.

2. There are two paired relationships where QD criteria cannot be met. Use of compensatory measures cannot negate these exceptions. As a result, there are two exemptions, NAF-LOWRY-10-E01 and ATC-LOWRY-10-E01, that require NAF and MAJCOM approval respectively. All information pertaining to these exceptions are contained in the attached nomographs.

3. Should you have additional questions or concerns, please contact 3415 TTW/SEW, at DSN: 926-2666 or email: 3415TTW.SEW@lowry.af.mil.

ELISHA A. MANNING III, Col, USAF
Commander

6 Attachments:
1. AF Form 943
2. Location Map
3. LPS Drawings
4. Glass Breakage Analyses
5. NAF-LOWRY-10-E01, Exception Decision Nomograph and Narrative
6. ATC-LOWRY-10-E01, Exception Decision Nomograph and Narrative

Attachment 3

SAMPLE NARRATIVE FOR AIR FORCE QUANTITY-DISTANCE EXCEPTION REQUEST

Exception Decision Nomograph – Day-to-Day Operations

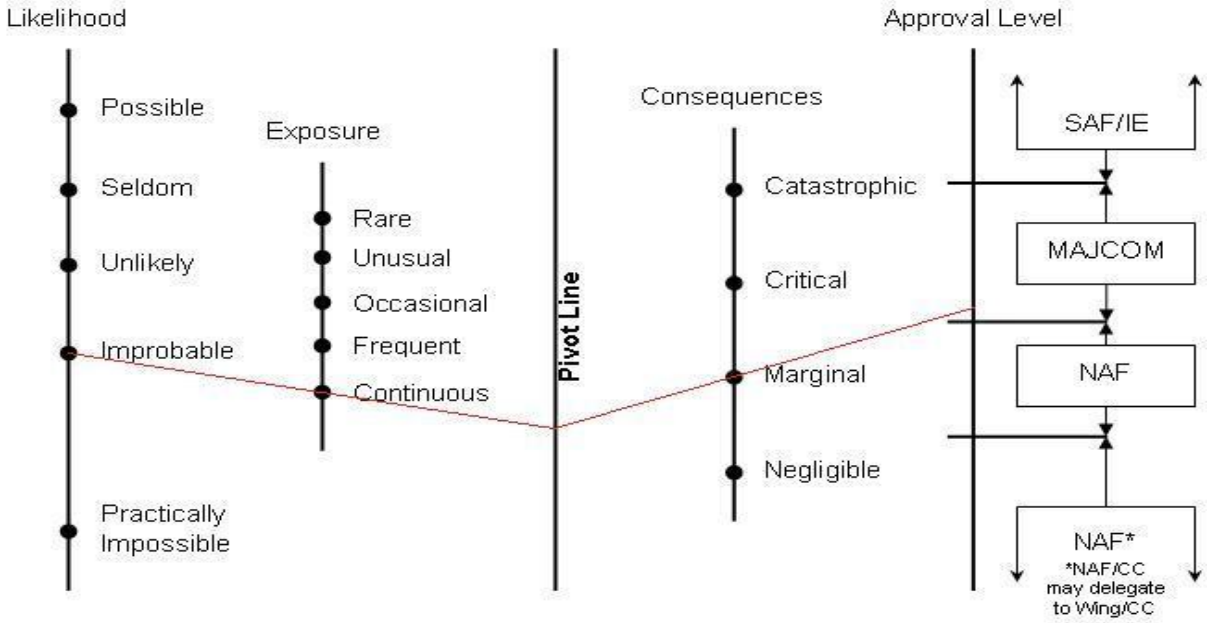

Title: ATC-LOWRY-10-E01 **Exception Type:** ILD

Standards Not Met

Detail the requirements that cannot be met.

Justification

State the strategic or other compelling reason(s) for the exception.

Alternatives

List option(s) which were considered and discounted. Provide rationale that precluded implementation.

Control Measures

Discuss measures implemented to reduce associated risk or plans to eliminate the exception.

Risk Assessment

PES Facility Number	ES Facility Number	Number of Personnel	Required K-Factor	Actual K-Factor	Required Distance	Actual Distance	PSI
433	465A	0M 0C	K18	15.9	245’	216’	4.25

- Direct propagation of explosion is not expected.
- Delayed propagation of an explosion may occur at the ES, as either a direct result of a fire or as a result of equipment failure.
- Unstrengthened buildings' damage may approximate 50%, or more, of the total replacement cost. Sensitive electronic equipment is expected to stop functioning.
- Personnel may suffer serious injuries from fragments, debris, firebrands, or other objects. There is a two% chance of eardrum damage to personnel.
- Transport vehicles will incur extensive, but not severe, body and glass damage consisting mainly of dishing of body panels and cracks in shatter-resistant window glass.

ATTACHMENT 4

SELECTED SECRETARY OF THE AIR FORCE EXEMPTIONS

(Some offices and symbols have changed)

Figure A4.1.

MEMORANDUM FOR AF/SE

SUBJECT: SECAF Exemption to Explosives Quantity-Distance Standards at Aviano AB Allowing for Construction of a US Army Heavy Drop Rigging Complex

Commanders in United States Air Forces in Europe and United States Army Europe are required to enhance the support of joint DoD operations during times of contingency. To this end, the US Army has asked to build a new Heavy Drop Rigging Complex (HDRC) at Aviano AB to enhance 173rd Airborne Brigade deployment activities. The proposed eight construction projects associated with this complex are less than the required explosives quantity-distance separation standards prescribed in DoD 6055.09-M and AFMAN 91-201 for 44 paired relationship explosives safety evaluations.

The departures from the safety standards involve insufficient separation between the proposed structures and the installation boundary and between USAF and USA explosives and non-explosives locations. The most serious of these departures is to the base boundary. Italian civilians in fields adjacent to the base boundary are at risk of death should an explosive mishap occur at either of the US Army HDRC explosives structures. Although the fields adjacent to the base boundary are currently used for agriculture, and are infrequently occupied by civilians, residential or business development of this land would increase the number of civilians in harm's way. It is my understanding, however, that a restrictive easement has been approved by the Italian regional panel limiting civilian exposure to risk by freezing use of the land at current levels, and prohibiting future development.

After due consideration, I find that compelling operational requirements necessitate deviation from Department of Defense Explosives Quantity-Distance standards with regard to the location of a new US Army HDRC at Aviano AB. Based on the concurrence provided by the highest US Army approval authority for explosives safety exemptions, DASA (I & E), and the absence of viable alternatives, I conclude that exemptions for the US Army HDRC are appropriate, and approve the start of this US Army-funded project.

I hereby approve the exemptions for the eight US Army HDRC locations. Permanent copies of this memorandum will be maintained at AFSC, USAFE, and Aviano AB. This exemption will be reviewed every five years at the appropriate level for the continued use of this exception in accordance with AFMAN 91-201 and to verify the continued accuracy of the risk assessment provided.

Figure A4.2.

MEMORANDUM FOR AF/SE

SUBJECT: SECAF Exemption to Explosives Quantity-Distance Standards at Osan AB Allowing for Construction of Fighter Squadron Operations/ Aircraft Maintenance Facility Addition

Commanders in Korea have a requirement to enhance the support of combat aircraft operations during times of contingency and wartime operations. As a result, the expansion of aircraft support facility 1702 is required to enhance the 51st Fighter Wing's ability to maintain combat assets.

Based on the proposed expansion location and its proximity to three nearby 3rd generation hardened aircraft shelters, the required explosives quantity-distance separation standards as prescribed in AFMAN 91-201 are not met. As a result, personnel and assets located in the facility could be subjected to blast overpressure and fragmentation far in excess of those prescribed during exercise and contingency operations. Should a mishap occur at the closest of the three aircraft shelters, consequences to the building 1702 expansion could include up to five fatalities, serious injuries, mission interruption, and up to $500,000 in damage.

I have weighed the need for the need for the 25th fighter squadron operations/aircraft maintenance facility expansion at Osan AB against the expected impact in the event of a mishap. In the absence of available alternatives, I conclude that an exemption for the construction of the aircraft support facility expansion is appropriate, and approve the expenditure of construction funds.

Permanent copies of this memorandum will be maintained at AFSC, HQ PACAF, and Osan AB. This exemption will be reviewed every five years at the appropriate level for the continued use of this exception in accordance with AFMAN 91-201.

Attachment 5

QD GUIDANCE FOR ON-BASE ROADS

A5.1. In order to prevent the generation of a significant number of quantity-distance exemptions, DoD 6055.09-M requirements allow the DoD components to establish procedures for assessing, documenting, and accepting the risks associated with application of QD criteria to on-base roads for on-base road relationships which existed prior to 1 Oct 00. QD criteria is based on the traffic density (PTR or IBD). After 1 Oct 00, any changes to a PES which increase its QD arc, construction of a new PES, or construction of a new on-base road, will require application of QD criteria to on-base roads which are traveled by personnel not involved in munitions related operations. If QD criteria cannot be met, the formal exemption requirements of AFMAN 91-201 must be followed.

A5.2. For those sited (DDESB- or AFSC-approved or MAJCOM baseline-approved) PES/on-base road relationships which existed prior to 1 Oct 00, we require the following risk assessment and documentation be accomplished:

A5.2.1. On a copy of the installation map, identify the following:

A5.2.1.1. All PESs having QD arcs (PTR or IBD based on traffic density) encompassing on-base roads traveled by personnel not involved in munitions-related operations.

A5.2.1.2. The Net Explosives Weight for Quantity-Distance (NEWQD) of the above PESs.

A5.2.1.3. The applicable QD arcs (PTR or IBD) of the above PESs based on the traffic density.

A5.2.1.4. The segments of the applicable on-base roads which pass through the above arcs.

A5.2.2. Perform a risk assessment of the relationships shown above in accordance with Risk Management procedures. Some factors that might be considered include:

A5.2.2.1. Operational necessity.

A5.2.2.2. The operation being performed (e.g., static storage, maintenance, and production).

A5.2.2.3. Operational activity cycles.

A5.2.2.4. Alternate routes.

A5.2.2.5. Traffic density.

A5.2.2.6. Accident records.

A5.2.2.7. Time interval of exposure.

A5.2.2.8. Type and quantity of munitions in proximity to the area transited.

A5.2.2.9. The closest distance from the area transited to the PES.

A5.2.2.10. The need for installation-related personnel to transit the ESQD arc.

A5.2.3. Document the commander's risk acceptance through a formal memorandum and review upon change of the approval authority. This memorandum must include the map showing the relationships for which he/she is accepting risk, a summary of the risk assessment, and a statement that the subject relationships existed as of 1 Oct 00.

A5.3. It is highly recommended that the above risk assessment and documentation be accomplished to accurately capture the relationships, which existed as of 1 Oct 00, and to avoid DDESB survey findings. The commander's risk acceptance and attached map must be included in amendments to site plans (for PESs which existed prior to 1 Oct 00), or referenced if previously submitted with another site plan amendment, which do not increase the QD arc. As stated previously, after 1 Oct 00, any changes to a PES which increase its QD arc, construction of a new PES, construction of a new on-base road, or increased traffic density will require application of QD criteria to on-base roads which are traveled by personnel not involved in munitions related operations (see **paragraph 12.16**.)

Attachment 6

ESP REVIEW ELEMENTS

Site Plan Package Requirements	N/A	Unit	NAF	MAJCOM	Comments
Transmittal Memorandum					
Purpose and Priority of ESP					
Expeditious Justification (If Applicable)					
Previous ESP Cancellation Statement (If Applicable)					
Project ID & Programming, Design, # (If Applicable)					
Statement of Reconciliation with Base Comprehensive Plans					
Statement of EMR Analysis					
Statement of LPS					
Statement of Glass Hazards					
Statement of Base Boundary/Easement					
Statement of Compensatory Measures or Risk Assessments (If Applicable)					
Maps and Drawings					
Definitive Drawing #s for Approved Facilities					
Facility Drawings (If Applicable)					
Scaled PES/ES Location Map					
PESs in Red; ESs in Green					
LPS Drawings (top, front, side with dimensions)					
Does MAP Match AF Form 943?					
IBD Clear Zone Identified					
Evaluation Zone Identified (If Applicable)					
AF Form 943					
PES/ES Details (Description, NEWQD, HD, Drawing Numbers, Special Features e.g. Barricades, etc.)					
Required and Actual Distances Annotated					
Exceptions Identified (If Applicable)					
Appropriate References Annotated in Column 9					
Does AF Form 943 Match Map?					
Risk Assessments					
Glass Breakage Assessment (If Applicable)					
LPS Loss Acceptance (If Applicable)					
Approved by the CV or CC					
Loss Acceptance Memorandums (i.e. Utilities, Water Tanks, POL) (If Applicable)					
Compensatory Measures					
Approved by the CV or CC					
Local Operating Instruction Referenced					
Miscellaneous Documents					
Restrictive Easement (If Applicable)					
Army/Navy Coordination (If Applicable)					
Airfield Waivers (If Applicable)					

Attachment 7

EXPLOSIVES SAFETY SUBMISSION (ESS) REVIEW ELEMENTS.

ESS REVIEW REQUIREMENTS			*BASE/SITE*
	UNIT	**MAJCOM**	**COMMENTS**
1. BACKGROUND			
Verify:			
- reason for the munitions response			
- purpose of the ESS			
- project scope or range of actions			
- *significant differences or absence of munitions response activities within MRA or MRS are described*[1]			
2..MAPS			
Ensure submission contains:			
- regional map of MRA or MRS			
- map of munitions response area or areas			
- map with ESQD arcs for HFD and MFR-H for unintentional and intentional detonations of MGFD			
- *map with ESQD arc for planned or established demolition area*			
3. ESQD for MGFD			
Verify:			
- selection of MGFD			
- explanation of demolition requirements to include BIP, consolidated shots, and collection points			
- maximum NEW is requested if consolidated shots are planned			
- *EMM explosives safety distances are provided with required shielding and 9-decibel protection*			
4. TYPES OF MEC			
Verify:			
- explanation of types of MEC expected to encounter			
5. START DATE			
- self explanatory			
6. MEC MIGRATION			
Verify:			
- description of existing naturally occurring phenomena that could cause migration or exposure of MEC			
- procedure for monitoring/managing migration of MEC is provided			

7. DETECTION EQUIPMENT AND RESPONSE TECHNIQUES			
Verify:			
- techniques for detection and removal of MEC are outlined			
- types of detection equipment and areas of use are explained			
- methods to establish expected detection capabilities are addressed, to include rationale for use and limitations of detection methods			
- exclusion zone procedures are described			
- QA/QC standards are described			
8. DISPOSITION TECHNIQUES			
Verify:			
- planned engineering controls are adequately described			
- disposition techniques (e.g., OB, OD, BIP, consolidated shots, incineration), if not previously explained, are described			
- scrap determination and disposition procedures are covered			
9. ENVIRONMENTAL, ECOLOGICAL, CULTURAL, AND OTHER CONSIDERATIONS			
Verify:			
- environmental, ecological, and cultural factors that impact the selected munitions response are addressed			
10. TECHNICAL SUPPORT			
Verify:			
- any required UXO-technician or EOD support is provided			
11. RESIDUAL RISK MANAGMENT			
Verify:			
- LUCs to be maintained or implemented are listed			

- any long-term management requirements are summarized			
12. SAFETY EDUCATION PROGRAM			
Verify:			
- methods used to educate the public about MEC risks are addressed			
13. STAKEHOLDER MANAGMENT			
Verify:			
- stakeholder concerns are addressed			
14. CONTINGENCIES			
Verify:			
- alternative actions to reduce the need to submit future amendments, if desired, are outlined			
15. REFERENCES			
- self-explanatory			
Note: [1] Italicized items may or may not be required based on the munitions response.			

Attachment 8

NO DOD ACTION INDICATED (NDAI) EXPLOSIVES SAFETY SUBMISSION (ESS) REVIEW ELEMENTS

ESS REVIEW REQUIREMENTS			*BASE/SITE*
	UNIT	**MAJCOM**	**COMMENTS**
1. BACKGROUND			
Verify:			
- site location, description, and history			
- current and future land use			
2. MAPS			
Ensure submission contains:			
- installation and MRA/MRS location map			
- MRA/MRS map			
3. JUSTIFICATION FOR THE DECISION			
Verify:			
- justification is adequate for the NDAI ESS decision			
4. CONTINGENCIES			
Verify:			
- alternative actions to reduce the need to submit future amendments, if desired, are outlined			
5. REFERENCES			
- self-explanatory			