BY ORDER OF THE SECRETARY OF THE AIR FORCE

AIR FORCE INSTRUCTION 11-2C-130 VOLUME 3

23 APRIL 2012

911 AIRLIFT WING Supplement

13 SEPTEMBER 2013

Flying Operations

C-130 OPERATIONS PROCEDURES

COMPLIANCE WITH THIS PUBLICATION IS MANDATORY

ACCESSIBILITY: Publications and forms are available for downloading or ordering on the e-Publishing website at **www.e-publishing.af.mil.**

RELEASABILITY: There are no releasability restrictions on this publication.

OPR: AMC/A3V — Certified by: AF/A3O-A (Col James W. Crowhurst)

Supersedes: AFI11-2C-130V3, 14 March 2006 — Pages: 317

(911AW)

OPR: 911 OG/OGV — Certified by: 911 OG/CC (Col Joseph M. Potts)

Supersedes: AFI11-2C-130_911AWSUP, 1 April 2008 — Pages:9

This instruction implements Air Force Instruction (AFI) 11-200, *Aircrew Training, Standardization/Evaluation, and General Operations Structure*, and references AFI 11-202, Volume 3, *General Flight Rules*, as well as Air Force Tactics Techniques and Procedures (AFTTP) 3-3.C-130. It establishes policy for the operation of the C-130 aircraft to safely and successfully accomplish worldwide mobility missions. This instruction applies to all commanders, operations supervisors, and aircrew assigned or attached to all flying activities of commands operating C-130 aircraft. Ensure that all records created as a result of processes prescribed in this publication are maintained in accordance with AFMAN 33-363, *Management of Records*, and disposed of in accordance with the Air Force Records Disposition Schedule (RDS) located at **https://www.my.af.mil/afrims/afrims/afrims/rims.cfm** This publication requires the collection and or maintenance of information protected by the Privacy Act (PA) of 1974. The authorities to collect and or maintain the records prescribed in this publication are Title 10 *United States Code*, Chapter 857 and Executive Order 9397, *Numbering System for Federal Accounts Relating to Individual Persons*, 30 Nov 1943. Forms affected by the PA have

an appropriate PA statement. System of records notice F011 AF XO, *Aviation Resource Management System* (ARMS) applies. To recommend changes, conflicts, suggestions, or recommendations submit the AF Form 847, *Recommendation for Change of Publication*, to the Office of Primary Responsibility (OPR); route AF Form 847s from the field through Major Command (MAJCOM) publications/forms Managers. The use of the name or mark of any specific manufacturer, commercial product, commodity, or service in this publication does not imply endorsement by the Air Force.

(911AW) AFI 11-2C-130V3, 21 April 2012, is supplemented as follows. This supplement implements and extends the guidance of AFI 11-2C-130, Volume 3, *C-130 Operations Procedures, 23 APR 2012*. It delineates the responsibilities of each of the flying units assigned to 911 OG. These procedures apply to all aircrew members assigned or attached to flying units within the 911th Airlift Wing (911 AW) performing 911 OG operations. Submit recommended changes to 911 OG/OGV on an **AF Form 847**, **Recommendation for Change of Publication**. Ensure that all records created as a result of processes prescribed in this publication are maintained in accordance with AFMAN 33-363, Management of Records, and disposed of IAW Air Force Records Disposition Schedule (RDS) located at **https://afrims.amc.af.mil/**. To ensure compliance with directives, the Chief of 911 OG/OGV will review this supplement annually or whenever a change is published to AFI 11-2C-130, Volume 3 or the MAJCOM supplement. See Attachment 1 for a Glossary of References and Supporting Information.

SUMMARY OF CHANGES

Updates office symbols and addresses. Removes material redundant with TO 1C-130X-1, AFI 11-2C-130V3 Addenda A and AFI 11-AEV3 Addenda A. Updates waiver authority for USTRANSCOM and COCOM missions (**paragraph 1.4.2**). Updates supplement coordination address (**paragraph 1.5.2**). Deletes Requisition and Distribution Procedures paragraph. Adds AMC Change of Publication sharepoint site address (**paragraph 1.7**). Updates list of Command and Control centers (**paragraph 2.1**). Allows NMR pilot designation as PIC (**paragraph 2.3**). Deletes the requirement for PICs to obtain and maintain an IMT account. Adds insufficient fuel as a mission reroute/divert condition (**paragraph 2.4.1**). Adds requirement for C2 to consult FCG and TWG for mission diversion (**paragraph 2.4.4**). Adds order of preference for operational C2 reporting (**paragraph 2.5.2**). Adds reporting requirements for Aircraft Alpha status 4 and 5 (**paragraph 2.5.3.1.2 and Attachment 1**). Adds AF Form 3858 reporting requirement to AE missions (**paragraph 2.5.3.1.3**). Adds reporting uncoordinated aircraft interceptions (**paragraph 2.5.3.1.4**). Adds an AFRC/ANG exception to IFM C2 (**paragraph 2.5.7**). Deletes the requirement to have a verbal tactics/intel briefing prior to entry into hostile area/combat zone. Deletes L-Band SATCOM C2 paragraph. Modifies Iridium phone guidance and adds reference to Iridium phone CONOPS document (**paragraph 2.5.10**). Deletes Table 2.1, 618 TACC phone numbers. Deletes two MR IP requirement for NMR augmenting crewmember (**paragraph 3.2.2**). Deletes navigator requirement for weather. Changes single LM maximum drop altitude to 13,999 MSL (**Table 3.1, note 5 and paragraph 19.17**). Adds an exception to Deputy Lead crew requirements for AWADS crews (**paragraph 3.2.4.1.3**). Adds an exception for Multiple-element formation lead requirements (**paragraph 3.2.4.3.2**). Adds reference to AFI 11-401 for Senior Staff flyers (paragraph 3.3.1). Clarifies PIC augmentation (**paragraph 3.4.1**). Moves training restrictions with passengers into **paragraph 9.1.3**

(**paragraph 3.4.2.2**). Expands guidance on flying without a navigator (paragraph 3.5). Expands guidance on self-alerts (**paragraph 3.7.3.1**). Replaces deadhead time with MEP time and adds MEP guidance (**paragraph 3.7.4**). Use of "get-me-down" causes DNIF (**paragraph 3.8.3**). Counter-Fatigue Management Program (**paragraph 3.9**) has been entirely rewritten and contains extensive additional guidance and requirements. Consolidates Crew Chief work/rest guidance (**paragraph 3.10.6**). Deletes Mechanical Staging. Formation interfly authorization is added (**paragraph 3.15.1**). Crewmember/aircraft interfly is rewritten and adds approval delegation authority (**paragraph 3.15.2**). Replaces all references to ACM with MEP (**paragraph 3.16**). Deletes reference to AMCI11-208 for MMO (**paragraph 3.17**). Adds Flight Attendants on DV mission guidance (**paragraph 3.18**). Rewords MEL waiver protocol (**paragraph 4.3.2**). Adds NGB/A3 waiver authority for MEL (**paragraph 4.3.4**). Adds guidance for Engineering Dispositions affecting operations (**paragraph 4.3.6**). Requires MEL column B asterisked items to be repaired for local training operations (**paragraph 4.5**). Requires a Red X to be downgraded prior to flight (**paragraph 4.5.1.1**). Changes TAS Probe Heat Column B from 1 to 0 with asterisk (**Table 4.4**). Deletes Radome Anti-Icing from MEL (**Table 4.4**). Adds reference to Job Guide for verifying main fuel quantity (**Table 4.10 remarks**). Changes Auxiliary and External Fuel quantity indicator Column A requirement from 2 to 0 with asterisk (**Table 4.10**). Changes HF Column A requirement from 1 to 0 with asterisk (**Table 4.13**). Changes NDB to ADF, and changes ADF Column A and B requirement to 0 with asterisk (**Table 4.14**). Deletes Radar requirement for NVG airland assault operations (**Table 4.14**). Adds formation flight remark to Radar requirements (**Table 4.14**). Deletes H-3 with 4 installed item from **Table 4.15**. Adds Wingtip Taxi Lights to **Table 4.15**. Gives drag index guidance on gear-down flight operations (**paragraph 4.9.1**). Deletes Navigator's Radar requirement from minimum equipment for NVG operations. Updates GPS and INS guidance for NVG operations (**paragraph 4.10.2**). Requires the flight engineer to be in the seat during flight (**paragraph 5.2**). Adds guidance for right seat assault landings (**paragraph 5.4.1.3**). Guidance for crewmembers occupying the paratroop door is moved to **paragraph 5.7.4**. Allows for inflight use of Portable Electronic Devices with wireless capability disabled (**paragraph 5.9.2**). Guidance on handheld GPS added (**paragraph 5.9.3**). Makes the PM responsible for advisory calls (**paragraph 5.11**). Adds Climb Out and Descent advisory calls (**Tables 5.1 and 5.2**). Modifies approach advisory calls (**Tables 5.3 and 5.4 and notes (1-4)**). Adds Stabilized Approach guidance (**paragraph 5.12**). The CRM paragraph has been expanded and renumbered (**paragraph 5.14**). Sterile cockpit, heads-up/heads-down, CRM enhancement, and critical action coordination guidance has been expanded or added (**paragraphs 5.14.3-6**). Use of Automation guidance has been added (**paragraph 5.15**). Aligns Anti-icing fluid guidance with T.O. 1C-130X-1 (**paragraph 5.18.8**). Burning down versus jettisoning fuel changes from "AMC policy is" to "aircrews should consider" (**paragraph 5.20.1**). Changes "should land" to "will land" after bird strike (**paragraph 5.22.5**). Aircrew Fatigue and Aviation Safety Action Program guidance added (**paragraphs 5.31 and 5.32**). Adds exception to passport requirement for OCONUS units (**paragraph 6.2.2**). Updates guidance on carrying personal helmet (**paragraph 6.2.7**). Requires AFI 11-202V3 and AFTTP3-3.C-130E/H review prior to transiting OCONUS (**paragraph 6.3.1**). Adds passenger restriction guidance on releasing seats (**paragraph 6.3.8**). PIC responsible for pax brief (**paragraph 6.3.8.3**). Allows carrying of only sections 1 and 2 of CMG (**Table 6.1**). Deletes carrying of TO 1C-130E-1-2 for AWADS navigators (**Table 6.1**). Requires TERPS reviews (**paragraph 6.5**). Incorporates electronic FCIF sign-off (**paragraphs 6.8.1.1 and 6.8.3**). Adds STAR requirement to **Table 6.2**. Adds AMC Special Mission briefing

requirement (**paragraph 6.12.2.3**). Adds Training/Evaluation briefing (**paragraph 6.12.8**). Adds DAFIF error reporting (**paragraph 6.15.2.4**). Adds guidance on checking performance data and using obstacle clearance worksheet (**paragraph 6.16**). Gives departure method priority (paragraph 6.16.1). Authorizes and details VFR departures (**paragraph 6.16.2.2**). Specifies minimum climb gradient is to MSA when not published (**paragraph 6.16.3.3**). Defines operational mission for OEI planning (**paragraph 6.16.3.4**). Updates SDP guidance (**paragraph 6.16.3.4.1**). Sets authority for using SDP or subtracting 48 ft/NM (**paragraph 6.16.3.4.2**). Deleted screen height above 50' calculations. Added Weather Minimums for Takeoff guidance (**Table 6.3**). Turbulence guidance is expanded (**paragraph 6.21.1**). Adds references for De/Anti-Icing procedures and holdover tables (**paragraph 6.21.2.2.2**). Requires PIC mission hazard briefing (**paragraph 6.23**). Deletes conditional release example (**paragraph 6.24.1**). Minimize APU use (**paragraph 6.25.1**). Defines same day for preflight (**paragraph 6.25.3.2.1**). Moves Aircraft Recovery away from MOB to from chapter 6 to chapter 12. Changes unpressurized flight guidance from 18,000 feet to 20,000 feet (**paragraph 6.27.1.7**). Deletes portable oxygen requirements for AE. Adds installed flares Note (**paragraph 6.30**). Updates HAZMAT references (**paragraph 6.30.1**). Deletes NVG weather minimums for current/qualified crewmembers (**paragraphs 6.33.1 and 6.43.1**). Adds references for NVG malfunctions (**paragraphs 6.33.2 and 6.43.2**). Requires use of MNPS oceanic checklist (**paragraph 6.34.1.1**). Moves enroute navigation procedures to Chapter 11 (**paragraph 6.34.5**). Adds HF failure guidance (**paragraph 6.37.1**). Adds PACOM weather contact (**paragraph 6.40**). Add Top of Descent requirements (**paragraph 6.41**). Adds variable visibility/ceiling guidance (**paragraph 6.42.3.4**). Expands CVR guidance (**paragraph 6.49**). Aircraft impoundment changed from "should" to "shall" (**paragraph 6.53**). Specifies lock-type for COMSEC and aircraft (**paragraphs 6.56.2 and 7.6.1.3**). Preventing and Resisting Hijacking added (**paragraph 7.8**). Hijacking communications updated (**paragraph 7.11**). Updates wearing of weapons (**paragraph 7.13.2**). FL180 changed to FL200 (**paragraph 8.4.1.1.8**). Physiological Episode form referenced (**paragraph 8.4.1.1.12**). Updates training with passengers (**paragraphs 9.1.3 and 9.1.4**). Adds touch-and-go guidance with cargo (**paragraph 9.2.2.8**). Alert crew prior to practice EP (**paragraph 9.4.1.1**). Adds prohibited maneuvers of unusual attitudes and high bank angles (**paragraphs 9.5.1.2 and 9.5.1.4**). Adds Briefing Requirements (**paragraph 9.6**). C-130 Airland Training added (**paragraph 9.15.1**). Updates IPE nomenclature (**paragraph 10.3.2.1**). Work Degradation Factors replace by Task Time Multipliers (**Table 10.1**). Prolonged Loss of Contact guidance added (**paragraph 11.1.1**). ETP Computations rewritten, incorporating Fuel Guidance Memorandum 2 (**paragraph 11.4.2**). Allows use of FalconView in lieu of printed charts (**paragraph 11.4.3**). Clarified Authority to Clear a Red X (**paragraph 12.3**). Added fuel servicing Warning (**paragraph 12.4**). Added simultaneous servicing guidance (**paragraph 12.4.1**). Deleted references to JP-8+100. Re-ordered and consolidated fuel servicing guidance (**paragraph 12.4.1**). Deleted screen height guidance. Adds Fuel Management/Monitoring responsibilities (**paragraph 12.9**). Deleted Tactical Checklist paragraph. Added Hostile Environment Repair Kit and procedures (**paragraph 12.10.2, Table 12.1, and Figures 12.1 – 12.14**). Deletes Chapter 13 references redundant to Addenda A. Chapter 13 has been extensively reorganized. Adds guidance for non-standard cargo (**paragraph 13.2.1.4.1**). Adds ATTLA certification guidance (**paragraph 13.2.1.4.2**). Fleet Service Checklist guidance added (**paragraph 13.4.1.4**). Duty/Preflight Loadmaster guidance added (**paragraph 13.4.1.5**). RAMPCO guidance added (**paragraph 13.4.1.6**). Wireless Headset reference added (**paragraph 13.4.1.7**). Seat availability guidance

added (**paragraph 13.4.2.1**). Passenger briefings mandated (**paragraph 13.4.2.3**). Passenger boarding priority addressed (**paragraph 13.4.2.5**). Disabled passenger guidance added (**paragraph 13.4.2.7**). Pillow and Blanket distribution addressed (**paragraph 13.4.2.11**). Addresses crewmember entertainment media (**paragraph 13.5.2.1**). Addresses congregation of passengers and deletes turbulence warning (**paragraph 13.5.3.1**). Updates Body Fluid/Bio-Hazard Clean-up (**paragraph 13.5.4**). Prohibits passenger frozen/cooked meals (**paragraph 13.5.5.2**). Addresses lack of face-to-face cargo briefing (**paragraph 13.6.2**). Authorizes electronic weight and balance program usage (**paragraph 13.8.1**). Deletes requirement to compute operating weight when using Canned Form F. Additional Cargo Considerations added (**paragraph 13.12**). Fuel Conservation guidance expanded to all operational phases (**paragraph 14.2**). Expands guidance on Wing Relieving Fuel (**paragraph 14.4.1**). Adds mission necessity as WRF exception (**paragraph 14.4.1.1.3**). Updates Depressurization Fuel guidance (**paragraph 14.4.2 and 14.4.2.3 added**). Mission Planning general guidance added (**paragraphs 16.1.1 through 16.1.3**). Mission Planning process summarized (**paragraph 16.2**). Minimum Altitude Capable defined (**paragraph 16.2.1**). Caution added to NVG Mission Planning (**paragraph 16.2.2**). Rules of Engagement and Evasion Plan of Action guidance added (**paragraphs 16.2.3 and 16.2.4**). Adds approval authority for semi-prepared ALZs (**paragraph 16.3.1**). Note added to Unmarked DZs (**paragraph 16.3.2.2**). Coordinate format specified (**paragraph 16.3.2.3**). Tactical Corridors added (**paragraph 16.4.1.1**). All references to course centerline changed to reflect tactical corridors. NVG enroute altitude Note added (**paragraph 16.4.1.4.1**). Night VMC Enroute Altitude depiction added (**Figure 16.1**). Adjust MSA for tactical corridors wider than 10 NM (**paragraph 16.4.1.5**). Adds Minimum IFR Enroute Altitude definition (**paragraph 16.4.1.6**). Two notes added to ESA (paragraph 16.4.1.7). Cold weather temperature guidance added (**paragraph 16.4.1.8**). Note for contingency/combat drops added (**paragraph 16.4.2**). Fly minimum night VMC altitudes "from slowdown through escape" changed to "through escape" (**paragraph 16.4.2.2**). LCLA altitude guidance added (**paragraph 16.4.2.4**). Construct chart using computer added (**paragraph 16.4.5**). Chart series/Date annotated on chart (**paragraph 16.4.5.1**). Run-in and objective emphasis added (**paragraph 16.4.7**). Mission Briefings/Debriefings added (**paragraph 16.5**). Chapter 17 has extensive additions (**major paragraphs 17.1 through 17.6, 17.7, 17.8, 17.9 through 17.11**). PICs given discretion to ERO any category of passenger (**paragraph 17.8.1**). Warning added (**paragraph 17.8.1**). "Ramp should" changed to "Ramp will" (**paragraph 17.8.1.10**). Deleted requirement to adjust landing/safety zone distance to account for NVG landing at end of LZ. Changed standard descent calls by Navigator below 100' (**paragraph 17.12.1.4.1**). Changes minimum altitude rolled out on final to 150 feet (**paragraphs 17.12.1.5, 18.13.1.1, and 18.13.2.1**). Replaces visual geometry descriptions with reference (**paragraph 18.8.2**). Changes "SKE must" to "SKE should" for night TFM (**paragraph 18.8.3.3**). Changes "Use line abreast" to "Consider using line abreast" (**paragraph 18.8.3.4**). Adds termination briefing for night threat reactions (**paragraph 18.8.3.9**). Deletes verify SCNS accuracy "not earlier than the one-minute advisory" (**paragraph 18.18.5**). Adds AWADS run-in requirements (**paragraph 18.18.6**). Replaces C-130E/H/J Interfly Procedures with reference (**paragraph 18.20**). Adds airdrops over water (**paragraph 19.1.2**). Adds carabineer requirement for LCLA airdrop kit (**paragraph 19.3**). Adds Joint Air Drop Inspection Note (**paragraph 19.4.1**). Adds parachute option and Warning (**paragraph 19.8.2**). Adds harness pre-measuring prior to flight (**paragraph 19.8.3.3**). Requires two parachutes for Army safeties (**paragraph 19.8.6**). Adds "green" or "light" Note (**paragraph 19.11.1**). Deleted all Exceptions for oxygen requirements.

Changes pre-breathing altitude from 18,000 to 20,000 MSL (**paragraphs 19.16.2 and 19.16.4**). Multiple unpressurized flights Warning expanded (**paragraph 19.16.3**). Changes pre-breathing complete altitude from 10,000 MSL to 16,000 MSL (**paragraph 19.16.4**). Allows use of supplemental oxygen during descent (**paragraph 19.16.4**). **Table 19.2** has been expanded, reformatted, and three notes added. Allows one loadmaster on High Altitude unilateral single CDS drop (Exception in **paragraph 19.17.1**). Requires two loadmasters above 14,000 MSL instead of 13,000 MSL (**paragraph 19.17.2**). Requires PT for unpressurized flights above FL200 (**paragraph 19.18**). Safety harness mandatory above 25,000 MSL instead of 14,000 MSL (**paragraph 19.20.2**). Changes 10,000 to 14,000 (**paragraphs 19.20.4 and 19.22**). Adds Exception for LCLA airdrops (**paragraph 19.29.3.1**). Updates CDS Breakaway/Non-breakaway guidance (**paragraphs 19.29.5.1 and 19.29.5.2**). Replaces references to oscillation dampening loop with anti-oscillation tie and adds Exception (**paragraph 19.29.6**). Venting aircraft for RAMZ added (**paragraph 19.33.3.1**). LCLA procedures added (**paragraph 19.34**). Information duplicated in TO 1C-130X-1 removed from Equipment and CDS Emergency Procedures (**paragraphs 19.40 and 19.41**). CRRC, Container Ramp Bundle, and SATB Emergency Procedure paragraphs deleted (duplicated in TO 1C-130X-1). PIC identifies armed crewmembers to AE crew (**paragraph 20.4.2**). LM provides interphone cord to MCD added (**paragraph 20.5.7**). MCD and CMT responsibilities updated (**paragraphs 20.6.4 and 20.6.5**). Aircraft Refueling section rewritten (**paragraph 20.8**). Reference to AFMAN 24-204 and Exception added (**paragraph 20.10.2**). Deleted requirements for missions over 4 hours (2 litter minimum for ambulatory and 1 seat for 3 litter patients). Deleted emergency litter requirement for all AE missions. AE Movement of Contaminated/Contagious Personnel updated (**paragraph 20.10.6**). CFR requirements added for concurrent fuel servicing (**paragraph 20.11.1**). Use of Priority Clearance expanded (**paragraph 20.12**). Loadmaster and AECM ERO procedures updated (**paragraph 20.14.2**). AE Baggage addressed (**paragraph 20.14.4**). Floor Loading Procedures redundant to AFI 11-2AE V3 Addenda A removed (**paragraph 20.15.1.2 and old Figure 20.1**). Category II route, Jumpmaster, Latest Descent Point, Stabilization Point redefined (**Attachment 1, terms**). Maintenance Status A-5 and Transition Event/Training defined (**Attachment 1, terms**).

(911AW) Updates paragraph numbers and references to supporting documents that have been updated since last revision of this AFI. Removes material redundant with AFI 11-2C-130V3. Adds information for over-torque of more than 23,000 in-lbs **(paragraph 4.11.3).** Deletes definition of BASH Phase I and Phase II, and policy on implementing local procedures **(paragraph 5.20.2).** Adds altitude block for FCF/OCF flights and contact information for Cleveland Center **(paragraph 5.23.1).** Adds guidance on seat position for MPD Pilots, and associated Tables **(paragraph 5.4.4), (tables 5.0.1, 50.2, 50.3.).** Adds guidance on marking personnel professional gear. **(6.2.6.1).** Updates guidance on requirement to carry an Airdrop Kit on the aircraft **(paragraph 6.2.10.2).** Deletes requirement for AC to ensure a publication kit is onboard the aircraft, and adds requirement to carry TO 1C-130-1 and TO 1C-130-1-1 on every flight **(paragraph 6.4.1).** Deletes minimum content list for publications kit **(paragraph 6.4.1.1).** Adds requirement to carry and maintain Electronic Flight Bags on every flight **(paragraph 6.4.2).** Defines minimum battery life for Electronic Flight Bags **(paragraph 6.4.2.1).** Adds guidance on application of unit ORM program **(paragraphs 6.22.1, 6.22.1.1, 6.22.1.2).** Reorganizes title paragraph entries for Defensive Systems Procedures and Defensive Equipment Checklists. Deletes **(paragraphs 6.57.5 and 6.57.5.1)**, and adds **(paragraph 6.59).**

Updates page numbers for reference material in the 911AW Tactical Aircrew Flimsy for airdrop malfunction **(paragraph 8.10.1).** Updates Drag Index for 911AW aircraft **(paragraph 14.4.4).** Adds information on crewmember report times for local and off-station missions **(paragraphs 16.1.3.1 and 16.1.3.2).**

Chapter 1—GENERAL INFORMATION **21**

1.1. General. 21

1.2. Applicability. 21

1.2. (911AW) Applicability. 21

1.3. Key Words Explained. 21

1.4. Deviations and Waivers. 21

1.5. Supplemental Procedures. 22

1.6. Local Supplement Coordination Process. 22

1.7. Improvement Recommendations. 22

1.8. Definitions. 22

1.9. Aircrew Operational Reports. 22

Chapter 2—COMMAND AND CONTROL **23**

2.1. General. 23

2.2. Execution Authority. 23

2.2. (911AW) Execution Authority. 23

2.3. Pilot in Command (PIC) Responsibility and Authority. 23

2.4. Mission Clearance Decision. 24

2.5. Operational C2 Reporting. 24

2.6. Mission Commander (MC). 26

2.7. C2 Agency Telephone Numbers. 26

2.8. Close Watch Missions. 27

2.9. Law Enforcement Support. 27

2.10. Enroute Maintenance Support. 27

Chapter 3—AIRCREW COMPLEMENT/MANAGEMENT **28**

3.1. General. 28

3.2. Aircrew Complement. 28

Table 3.1. Aircrew Complement. 28

3.3. Aircrew Member Qualification. 31

3.4. Pilots. 31

3.5. Navigators. 31
3.6. Flight Engineers, and Loadmasters. 32
3.7. Aircrew Management. 32
3.8. Scheduling Restrictions. 34
3.9. Fatigue Countermeasures Management Program. 34
3.10. Crew Rest/Enroute Ground Time. 37
3.11. Alerting Procedures. 38
3.12. Stage Management. 39
3.13. Standby Force Duty. 40
3.14. Orientation Flights and Incentive Flights. 41
3.15. Interfly. 41
3.16. Mission Essential Personnel (MEP). 42
3.17. Mission Mobility Observers (MMO). 43
3.18. Flight Attendants on Distinguished Visitor Missions. 43

Chapter 4—AIRCRAFT OPERATING RESTRICTIONS 44

4.1. Objective. 44
4.2. Minimum Equipment List (MEL) Policy. 44
4.3. Waiver Protocol. 45
4.4. Technical Assistance. 45
4.5. MEL Table Definitions/Column Identifiers. 45
4.6. C-130 MEL. 46
Table 4.1. Engines/Auxiliary Power Unit (APU)/Gas turbine Compressor (GTC). 47
Table 4.2. Propellers. 47
Table 4.3. Electrical System. 48
Table 4.4. Anti-Ice/De-Ice System. 48
Table 4.5. Air Conditioning, Pressurization and Bleed Air. 49
Table 4.6. Doors and Ramp Systems. 50
Table 4.7. Hydraulics. 50
Table 4.8. Landing Gear. 51
Table 4.9. Brake/Anti Skid Systems. 51
Table 4.10. Fuel System. 52
Table 4.11. Flight Recorder/Locating Systems. 53
Table 4.12. Fire Protection/Warning Systems. 54

Table 4.13. Flight Instruments. 54
Table 4.14. Navigation Systems. 55
Table 4.15. Aircraft Exterior/Interior Lighting. 56
4.7. Supplements. 56
4.8. Navigation Systems. 56
4.9. Gear Down Flight Operations. 57
4.10. Minimum Equipment for NVG Operations. 57
4.11. (Added-911AW) Over-Torque of T-56-15 Engines. 57

Chapter 5—OPERATIONAL PROCEDURES 59

5.1. Checklists. 59
5.2. Duty Station. 59
5.3. Flight Station Entry. 59
5.4. Takeoff and Landing Policy. 59
5.5. Landing Gear and Flap Operating Policy. 60
5.6. Outside Observer Duties. 60
5.7. Seat Belts. 60
5.8. Aircraft Lighting. 61
5.9. Portable Electronic Devices. 61
5.10. Tobacco Use on Air Force Aircraft. 62
5.11. Advisory Calls. 62
Table 5.1. Climb Out. 62
Table 5.1. (911AW) MPD Phase I (FPC). 62
Table 5.2. Descent. 63
Table 5.2. (911AW) MPD Phase II (FPQ). 63
Table 5.3. Non-Precision Approaches. 63
Table 5.3. (911AW) MPD Phase III (FPQ) & AC COURSE GRADUATES (FPL). 64
Table 5.4. Precision Approaches. 64
5.12. Stabilized Approach. 65
5.13. Communications Policy. 66
5.14. Crew Resource Management (CRM)/Threat and Error Management. 67
5.15. Use of Automation. 68
5.16. Transportation of Pets. 68
5.17. Alcoholic Beverages. 68

5.18. Runway, Taxiway, and Airfield Requirements. 68

Table 5.5. RCR Values. 70

5.19. Aircraft Taxi and Taxi Obstruction Clearance Criteria and Foreign Object Damage (FOD) Avoidance. 71

5.20. Fuel Jettison Procedures. 72

5.21. Aircraft Speed. 73

5.22. Bird/Wildlife Aircraft Strike Hazard (BASH) Programs. 73

5.23. Functional Check Flights (FCFs), Acceptance Check Flights (ACFs) and Operational Check Flights (OCFs). 75

5.24. Participation in Aerial Events. 76

5.25. Traffic Alerting and Collision Avoidance System (TCAS). 76

5.26. Radar Altimeter. 76

5.27. Buddy and Windmill Taxi Starts. 76

5.28. Reduced Power Operations (N/A for 3 Engine Operations). 76

5.29. Aircraft Recovery from Unprepared Surfaces. 77

5.30. Hand-held (HH) GPS for Laptops with Moving Map Display (MMD). 77

5.31. Aircrew Fatigue. 77

5.32. Aviation Safety Action Program (ASAP). 78

Chapter 6—AIRCREW PROCEDURES **79**

Section 6A—Pre-Mission 79

6.1. Aircrew Uniform. 79

6.2. Personal Requirements. 79

6.3. Pre-Mission Actions. 81

6.4. Aircrew Publications Requirements. 82

Table 6.1. Aircrew Publications. 83

6.5. Airfield Review. 83

6.6. Aircrew Intelligence Briefing. 83

Section 6B—Predeparture 83

6.7. Global Decision Scheduling System Account. 84

6.8. Flight Crew Information File (FCIF). 84

6.9. Flight Crew Bulletins (FCB). 84

6.10. Mission Kits. 84

6.10. (911AW) Copilots will ensure, if required, that a mission kit is located on the flight deck and has been inventoried prior to flight. 84
6.11. Route Navigation Kits. 86
Table 6.2. Route Navigation Kit Contents. 86
6.12. Briefing Requirements. 86
6.13. Call Signs. 88
6.14. Instrument Flight Rules. 89
6.15. Flight Plan/Data Verification. 89
6.16. Departure Planning. 89
6.17. Weather Minimums for Takeoff. 92
Table 6.3. Weather Minimums for Takeoff. 92
6.18. Alternate Planning. 93
6.19. Departure Alternates. 93
6.20. Destination Requirements (for filing purposes). 93
6.21. Adverse Weather. 94
6.22. Operational Risk Management (ORM). 96
Section 6C—Preflight 97
6.23. Hazard Identification and Mitigation. 97
6.24. AFTO Forms 781 Series. 97
6.25. Aircraft Servicing and Ground Operations. 98
6.26. Aircraft Recovery Away from Main Operating Base (MOB). 99
6.27. Aircrew Flight Equipment Requirements. 99
6.28. Fleet Service. 101
6.29. Cargo Documentation. 101
6.30. Airlifting Hazardous Cargo. 101
6.31. Handling of Classified Cargo, Registered Mail, Mission Capable (MICAP) Parts, Very, Very Important Part (VVIP), Forward Supply System (FSS) Shipments, and Courier Material. 102
Section 6D—Departure 103
6.32. On Time Takeoffs. 103
6.33. NVG Departures. 103
Section 6E—Enroute 103
6.34. Flight Progress. 103

6.35. In-Flight Meals. 104
6.36. Communications Instructions Reporting Vital Intelligence Sightings (CIRVIS) and Other Reports. 104
6.37. Communications. 104
6.38. In-Flight Emergency Procedures. 105
6.39. Need for Medical Assistance. 105
6.40. Weather Forecasts. 105
Section 6F—Arrival 105
6.41. Descent. 105
6.42. Instrument Approach Procedures. 106
6.43. NVG Approach and Landing. 108
6.44. Unscheduled Landings. 108
6.45. Maintenance. 109
6.46. Border Clearance. 109
6.47. Insect and Pest Control. 113
Section 6G—Miscellaneous 114
6.48. Dropped Objects. 114
6.49. Cockpit Voice Recorder (CVR). 114
6.50. Aircrew Flight Equipment (AFE) and Dash 21 Equipment Documentation. 114
6.51. Passenger Restrictions. 115
6.52. Airfield Data Reports. 115
6.53. Impoundment of Aircraft. 115
6.54. Wake Turbulence Avoidance. 115
6.55. Overflying Enroute Stops. 116
6.56. Classified Equipment and Material. 116
6.57. Cockpit Congestion and Loose Objects. 117
6.58. Ordnance Procedures. 117
6.59. (Added-911AW) Defensive Systems Procedures. 117
Chapter 7—AIRCRAFT SECURITY 118
7.1. General. 118
7.2. Security. 118
7.3. Integrated Defense. 118
7.4. Standby Aircraft Security. 118

7.5. Enroute Security. 118
7.6. Detecting Unauthorized Entry. 119
7.7. Preventive Measures. 120
7.8. Preventing and Resisting Hijacking. 121
7.9. Initial Response. 122
7.10. In-Flight Resistance. 123
7.11. Communications Between Aircrew and Ground Agencies. 123
7.12. Forced Penetration of Unfriendly Airspace. 123
7.13. Arming of Crewmembers. 123
7.14. Force Protection. 124

Chapter 8—OPERATIONAL REPORTS AND FORMS 125

8.1. General. 125
8.2. AF IMT 457, USAF Hazard Report. 125
8.3. AF IMT 651, Hazardous Air Traffic Report (HATR). 125
8.4. AMC IMT 97, AMC In-Flight Emergency and Unusual Occurrence Worksheet. 126
8.5. Report Violations, Unusual Events, or Circumstances. 127
8.6. Petroleum, Oil, and Lubricants (POL) - Aviation Fuels Documentation. 130
8.7. AMC Form 54, Aircraft Commander’s Report on Services/Facilities. 131
8.8. AMC Form 196, Aircraft Commander’s Report on Crew Member. 131
8.9. AMC Form 43, Transient Aircrew Facilities Report. 131
8.10. DD1748-2, Airdrop Malfunction Report (Personnel-Cargo). 131
8.11. AF IMT 4096, Airdrop/Tactical Airland/Air Refueling Mission Recap. 132
8.12. Operational Forms for Loadmasters. 132
8.13. AE Event/Near Miss Reporting Process. 132
8.14. ASAP Report. 132

Chapter 9—TRAINING AND OPERATING LIMITATIONS 133

9.1. Passengers on Training Missions. 133
9.2. Touch-and-go Landing Limitations. 133
9.3. Training on Operational Missions. 134
9.4. Simulated Emergency Flight Procedures. 134
9.5. Flight Maneuvers. 135
9.6. Briefing Requirements. 136
9.7. Simulated Instrument Flight. 136

9.8. Operating Limitations. 136
9.9. Landing Limitations. 137
9.10. Actual Engine Shutdown and Airstart. 138
9.11. Windmill Taxi Start. 138
9.12. Aborted Normal Takeoff. 138
9.13. Aborted Maximum Effort Takeoff. 138
9.14. Maximum Effort Takeoff. 139
9.15. Night Vision Goggle (NVG) Training. 139
Table 9.1. Training Flight Restrictions. 139

Chapter 10—AIRCREW OPERATIONS IN CHEMICAL, BIOLOGICAL, RADIOLOGICAL, AND NUCLEAR THREAT ENVIRONMENT 143

10.1. Overview. 143
10.2. Understanding the CBRN Threat. 143
10.3. CBRN Passive Defense Measures. 143
10.4. Flight Operations. 146
10.5. Ground Operations. 147
Table 10.1. Task Time Multipliers. 148
Table 10.2. Ten-Foot Rule Time Standards (Source: AFMAN 10-2503). 150

Chapter 11—NAVIGATION PROCEDURES 151

11.1. General. 151
11.2. Operations in International/Territorial Airspace. 151
11.3. Navigation Databases / Flight Plan / Data Verification. 152
11.4. Master Flight Plan / Plotting Chart. 153
11.5. Navigation Capability / Airspace Requirements. 154
11.6. Enroute / Flight Progress. 155
11.7. Laptop Computers. 156
11.8. Flight Records. 156
11.9. Celestial Procedures. 157
11.10. Deviation Check Procedures. 157
11.11. True Airspeed (TAS) Check Procedures. 158
11.12. In-flight Fuel Management Procedures. 158
11.13. Airborne Radar Approach Procedures. 160
11.14. Grid Procedures. 161

Figure 11.1. ETP. 165
Figure 11.2. Example AF Form 4116. 166
Figure 11.3. ARA Pattern Construction Procedures. 170
Figure 11.4. AF IMT 4125, Range Control Chart. 171

Chapter 12—FLIGHT ENGINEER / AIRCREW MAINTENANCE SUPPORT PROCEDURES 172

12.1. General: 172
12.2. Responsibilities. 172
12.3. Authority to Clear a Red X. 172
12.4. Aircraft Servicing and Ground Operations. 172
12.5. Aircraft Recovery Away from Main Operating Base (MOB). 174
12.6. Aircraft Structural Integrity Program. 174
12.7. Aircraft Systems/Forms Management. 174
12.8. Performance Data, including TOLD Card. 174
12.9. Fuel Management/Monitoring. 175
12.10. HOSTILE ENVIRONMENT REPAIR PROCEDURES. 178
Table 12.1. Hostile Environment Repair Kit (HERK) Parts List. 193
Figure 12.1. Alternate DC Power Connections. 194
Figure 12.2. Reverse Current Relay. 195
Figure 12.3. Gas Turbine Compressor. 195
Figure 12.4. GTC Fuel Supply. 196
Figure 12.5. APU (Right Side View). 196
Figure 12.6. APU (Left Side View). 197
Figure 12.7. APU Inlet Door Assembly. 197
Figure 12.8. Engine Accessory Locations. 198
Figure 12.9. Gear Box Accessory Locations. 199
Figure 12.10. Prewired Cannon Plugs (Speed Sensitive Control and Ignition Relay). 199
Figure 12.11. Bypassing the INS Reverse Current Relay. 200
Figure 12.12. Jumping Bus Switching Unit (BSU). 201
Figure 12.13. BSU #1 Cannon plug. 202
Figure 12.14. BSU#2 Cannon Plug. 202

Chapter 13—CARGO AND PASSENGER PROCEDURES 203

13.1. General. 203

13.2. Responsibilities for Aircraft Loading. 203
13.3. Emergency Exits and Safety Aisles. 204
13.4. Pre-Mission Duties. 205
13.5. Passenger Handling. 207
13.6. Enroute and Post-Flight Duties. 210
13.7. Loaded Weapons. 210
13.8. Weight and Balance. 210
13.9. Cargo Validation On/Offloading Procedures and Format. 211
13.10. Emergency Airlift of Personnel. 211
13.11. Rucksacks. 211
13.12. Additional Cargo Considerations. 211

Chapter 14—FUEL PLANNING AND CONSERVATION 213

14.1. General. 213
14.2. Fuel Conservation. 213
14.3. Fuel Planning Procedures. 214
14.4. Fuel Requirements. 215
14.5. Fuel Planning. 216
Table 14.1. Fuel Load Components. 218

Chapter 15—AIR REFUELING 220

15.1. .This chapter does not apply to AMC C-130E/H aircraft and is intentionally left blank. 220

Chapter 16—MISSION PLANNING 221

16.1. General. 221
16.2. Mission Planning. 221
16.3. Planning Restrictions. 222
16.4. Route Planning. 223
Figure 16.1. Night VMC Enroute Altitude. 224
16.5. Briefings. 228

Chapter 17—EMPLOYMENT 229

Section 17A—-General Procedures 229

17.1. General. 229
17.2. Airfield Requirements. 229

Section 17B—Enroute 229
17.3. Navigation: 229
Section 17C—-Objective Area 229
17.4. General. 229
Section 17D—-Approaches 229
17.5. General. 229
17.6. Low Altitude Approaches. 230
17.7. High Altitude Approaches. 230
Section 17E—-Ground Operations 230
17.8. General. 230
Section 17F—-Departures 235
17.9. General. 235
17.10. Low Escape. 235
17.11. High Escape. 235
Section 17G—-NVG 236
17.12. NVG Operations. 236
Chapter 18—AIRCRAFT FORMATION 238
18.1. General. 238
18.2. Specified Times. 238
18.3. Weather Minimums. 238
18.4. Ground Operations. 238
18.5. Takeoff. 238
18.6. Altimeter Setting. 238
18.7. Formations. 238
18.8. Visual Geometries. 239
18.9. Visual Rejoins. 239
18.10. Tactical Formation Maneuver Restrictions. 239
18.11. Visual Slowdown Procedures. 240
18.12. Visual Airdrop Procedures. 240
18.13. Visual Recovery. 240
18.14. Landing. 240
18.15. SKE Procedures. 240

18.16. Loss of SKE-Individual Aircraft. 240
18.17. SKE Rejoins. 241
18.18. SKE Airdrop Procedures. 241
18.19. SKE Formation Landing. 242
18.20. C-130E/H/J Interfly Procedures. 242

Chapter 19—AIRDROP OPERATIONS 243

19.1. General. 243
19.2. Identification of Airdrop Items. 243
19.3. Airdrop Kits. 243
19.4. Joint Air Drop Inspection. 243
Table 19.1. Load Planning Restrictions. 244
19.5. Verification of Load Information. 245
19.6. Marking Airdrop Loads. 245
19.7. DZ Markings. 245
19.8. Safety Equipment. 246
19.9. Secure Enroute Communications Package (SECOMP). 247
19.10. Airdrop Weather Minimums and Wind Restrictions. 247
19.11. Tactical Checklists. 247
19.12. Airdrop Altitudes and Airspeeds. 248
19.13. No Drop Decisions. 248
19.14. Drop Zone Communications. 248
19.15. Methods of Aerial Delivery. 248
19.16. High Altitude Airdrop Oxygen Requirements. 251
Table 19.2. Prebreathing Requirements and Exposure Limits for High Altitude Operations. .. 252
19.17. High Altitude Airdrop Loadmaster Requirements. 253
19.18. High Altitude Operational Requirements for Physiology Technicians (PT). 253
19.19. High Altitude Airdrop PT Duties. 253
19.20. High Altitude Airdrop Conduct of Operations. 254
19.21. High Altitude Personnel Airdrop Procedures. 254
19.22. High Altitude Cargo Airdrop Procedures. 254
19.23. Personnel Airdrops. 255
19.24. Tailgate Airdrop Procedures. 256
19.25. Combination Airdrops. 257

19.26. Door Bundle Airdrops. 257
19.27. Equipment Airdrops. 258
19.28. Heavy Equipment airdrops with the Extraction Parachute Jettison System (EPJS). 258
19.29. CDS Airdrops. 258
19.30. Combat Rubber Raiding Craft (CRRC) Airdrops. 259
19.31. Free-Fall Airdrops. 260
19.32. High Velocity CDS Airdrops. 260
19.33. Container Ramp Bundles. 260
19.34. Low Cost Low Altitude Airdrop (LCLA). 262
19.35. SATBs. 263
19.36. NVG Airdrop Procedures. 264
19.37. Emergency Procedures. 264
19.38. Emergency Parachutist Bail Out Procedures. 264
19.39. Towed Parachutist. 264
19.40. Equipment Emergency Procedures. 268
19.41. CDS Emergency Procedures. 269
19.42. High Altitude Emergency Procedures. 269

Chapter 20—AEROMEDICAL EVACUATION 270

20.1. Mission. 270
20.2. Operational Control and Reporting of Aeromedical Evacuation Forces. 270
20.3. Alerting Procedures. 270
20.4. Pilot in Command Responsibilities. 271
20.5. Loadmaster Responsibilities. 271
20.6. Aeromedical Evacuation Crew Responsibilities. 271
20.7. Ground Operations. 272
20.8. Aircraft Refueling. 272
20.9. Aircraft Configuration. 272
20.10. Passengers and Cargo. 273
20.11. Crash/Fire/Rescue (CFR). 274
20.12. AE Call Sign/Use of Priority Clearance. 275
20.13. Load Message. 275
20.14. ERO Procedures. 275

20.15. Floor Loading Procedures. 275

Chapter 21—EMERGENCY NUCLEAR AIRLIFT OPERATIONS (ENAO) 277

21.1. General. 277

21.2. Conduct of Operations. 277

21.3. Emergency Nuclear Airlift Standards. 277

21.4. Aircrew Selection. 277

21.5. Aircrew Requirements. 277

21.6. Aircrew Briefings. 278

21.7. Enroute Procedures. 278

21.8. Custody of Nuclear Cargo. 279

21.9. Security Procedures. 279

21.10. Emergency Procedures. 280

21.11. Maintenance and Servicing on Aircraft Loaded with Nuclear Cargo. 281

21.12. Emergency Nuclear Airlift Operations Guide. 282

21.13. Prior to On-load. 282

21.14. Arrival and On-load. 282

21.15. Enroute to Offload. 283

21.16. Off-load. 284

Attachment 1—GLOSSARY OF REFERENCES AND SUPPORTING INFORMATION 286

Chapter 1

GENERAL INFORMATION

1.1. General.

1.1.1. This Air Force Instruction (AFI) provides policy for operating the C-130E/H and LC-130. It is an original source document for many areas but, for efficacy, restates information found in aircraft flight manuals, flight information publications (FLIP), and other Air Force directives. When guidance in this AFI conflicts with another basic/source document, that document takes precedence. For matters where this AFI is the source document, waiver authority is In Accordance With (IAW) **paragraph 1.4** For matters where this AFI repeats information in another document, follow waiver authority outlined in the basic/source document.

1.1.2. Unit commanders and agency directors involved with or supporting C-130 operations shall make current copies of this AFI available to appropriate personnel. Transportation and Base Operations passenger manifesting agencies will maintain a current copy of this AFI.

1.2. Applicability. This AFI applies to aircrew members, support personnel, and managers involved with employing C-130 aircraft.

1.2. (911AW)Applicability. These procedures apply to all 911th Airlift Wing (911AW) personnel, assigned/ attached, who participate in flying activities.

1.3. Key Words Explained.

1.3.1. "Will" and "shall" indicate a mandatory requirement.

1.3.2. "Should" indicates a preferred, but not mandatory, method of accomplishment.

1.3.3. "May" indicates an acceptable or suggested means of accomplishment.

1.3.4. "**NOTE**" indicates operating procedures, techniques, etc., considered essential to emphasize.

1.3.5. **"CAUTION"** indicates operating procedures, techniques, etc., which could result in damage to equipment if not carefully followed.

1.3.6. **"WARNING"** indicates operating procedures, techniques, etc., which could result in personal injury or loss of life if not carefully followed.

1.4. Deviations and Waivers. Do not deviate from policies in this AFI except when the situation demands immediate action to ensure safety. The Pilot in Command (PIC) is vested with ultimate mission authority and responsible for each course-of-action they choose to take.

1.4.1. Deviations. The PIC shall report deviations or exceptions taken without a waiver through command channels to their Chief, Major Command (MAJCOM) Stan/Eval.

1.4.2. Waivers. Unless otherwise directed, waiver authority for the contents of this instruction is the MAJCOM/A3/DO with mission execution authority. For USTRANSCOM/AMC operational missions under Operational Control (OPCON) of 18 Air Force, 18 AF/CC is the waiver authority. For aircrews that change Operational Control (CHOP) to a COCOM, the COMAFFOR is the waiver authority.

1.4.2.1. Permanent waivers affect theater unique circumstances and are enduring in nature. List MAJCOM/A3/DO-approved permanent waivers in the MAJCOM supplement (see **paragraph 1.5**)

1.4.2.2. Long-term waivers affect multiple aircraft/multiple missions but are not permanent in nature (expire at a specific date/time). MAJCOM Stan/Eval shall send HQ AMC/A3V (lead command) copies of MAJCOM/A3/DO-approved long-term waivers, as appropriate.

1.4.2.3. Short-notice waivers are for specific missions in execution. PICs shall use the Waiver Protocol procedure in Chapter 4 to secure MAJCOM/A3/DO approval for short-notice waivers.

1.5. Supplemental Procedures. This AFI is a basic directive. Each user MAJCOM or operational theater may supplement this AFI according to AFPD 11-2, *Aircraft Rules and Procedures*, and AFI 33-360, *Publications and Forms Management*. Stipulate unique MAJCOM procedures (shall not be less restrictive than this basic document) and publish MAJCOM/A3/DO-approved permanent waivers in the MAJCOM supplement.

1.5.1. Combined Command Operations. Plan and conduct all operations that include forces from multiple MAJCOMs using provisions in this AFI. Do not assume or expect aircrews to perform MAJCOM theater unique procedures without owning MAJCOM/A3/DO approval and advance training.

1.5.2. Coordination Process. Forward MAJCOM approved supplements (attach AF Form 673, *Air Force Publication/Form Action Request*) to HQ AMC/A3V, 402 Scott Dr., Unit 3A1, Scott AFB IL, 62225-5302.

1.6. Local Supplement Coordination Process. Operations Group commanders (OG/CCs) shall define local operating procedures to this instruction in a unit supplement. OG/CCs shall obtain approval from Numbered Air Force (NAF), if applicable, and MAJCOM prior to releasing their supplement. Send an electronic copy of the approved version to MAJCOM Stan/Eval, or NAF/DO (if applicable). MAJCOM Stan/Eval will send approved copies to HQ AMC/A3V.

1.7. Improvement Recommendations. Send comments and suggested improvements to this instruction on an AF Form 847, *Recommendation for Change of Publication*, through channels to HQ AMC/A3V, 402 Scott Drive Unit 3A1, Scott AFB IL, 62225-5302 or post to the Air Mobility Command Change of Publication sharepoint site: **https://cs.eis.af.mil/aircrewpubs/AMC%20847%20Program/default.aspx**.

1.8. Definitions. Find explanations or definitions of terms and abbreviations commonly used in the aviation community in Title 14, Code of Federal Regulations (CFR), Part 1, *Aeronautics and Space*, current edition; DOD FLIP, *General Planning*, Chapter 2, current edition; and Joint Publication 102, *DOD Dictionary of Military and Associated Terms*, November 8, 2010. See **Attachment 1** for common terms used herein.

1.9. Aircrew Operational Reports. The reporting requirements in this instruction are exempt from licensing IAW paragraph 2.11.10 of AFI 33-324, *The Information Collections and Reports Management Program; Controlling Internal, Public, and Interagency Air Force Information Collections.*

Chapter 2

COMMAND AND CONTROL

2.1. General. The Mobility Air Forces (MAF) command and control (C2) network consists of the following C2 centers: 618 Air Operations Center (Tanker Airlift Control Center) (618 AOC (TACC)), Pacific Air Forces (PACAF) or United States Air Forces Europe (USAFE) Air and Space Operations Centers (AOCs), Air National Guard (ANG) Command Center, Air Force Reserve Command (AFRC) Command Center, theater Air and Space Operations Centers (AOC), Air Mobility Division (AMD), Joint Operational Support Airlift Center (JOSAC), Special Air Missions Division, Office of Assistant Vice Chief of Staff, USAF (CVAM), Unit Command Posts, Air Mobility Control Centers (AMCC), Contingency Response Groups (CRG), Contingency Response Elements (CRE), and Special Tactics Teams (STT). C2 centers are action agents for the MAF commander with execution authority (operational control) over mobility missions/forces.

2.2. Execution Authority. Headquarters commanders with command authority over MAF resources hold execution authority for directed missions. Commanders with execution authority formulate plans, allocate assets, and approve missions through a local command post or C2 element. OG/CCs serve as execution authority for local training missions. The pilot in command will execute missions operating outside normal communication channels (use last known mission orders or best course of action).

2.2. (911AW)Execution Authority. The 911th Supervisor of Flying (SOF) is the direct representative of the 911 OG/CC. A qualified SOF will be on duty from 30 minutes prior to crew's show time until completion of the mission for all local flights. The SOF program will be administered IAW AFI 11-418, *Operations Supervision*, and the AFI 11-418_911AWSUP1. The SOF continuity book, located at the operations counter, details all SOF duties and responsibilities.

2.2.1. Off-Station Trainer (OST). Refer to MAJCOM instruction, for procedures and requirements. (E.g. AMCI 11-208 for AMC aircraft)

2.2.1.1. AFRC Current Operations (AFRC/A3OO) is approval authority for AFRC Unit Equipped (UE) OSTs.

2.3. Pilot in Command (PIC) Responsibility and Authority. SQ/CCs shall designate an aircraft commander (AC), instructor pilot (IP), or evaluator pilot (EP) as the PIC for all flights, on a flight authorization form, IAW AFI 11-401, *Aviation Management*, and applicable supplements. An unqualified pilot may not be designated as PIC. A non-mission ready (NMR) pilot may be designated as PIC, provided the delinquent events causing the NMR are not performed on that flight (or the portion of that flight for which the NMR pilot is designated as PIC).PICs are:

2.3.1. In command of all persons aboard the aircraft.

2.3.2. Vested with authority to accomplish the assigned mission. The PIC shall only fly events authorized in the mission tasking unless, in the PIC's judgment, an emergency condition demands otherwise. Fly unscheduled training events (for example, transition training) after obtaining approval from the execution authority.

2.3.3. The final mission authority and will make decisions not assigned to higher authority.

2.3.4. The final authority for requesting or accepting aircrew or mission waivers.

2.3.5. Responsible for passing mission progress reports (at least daily) to C2 agents.

2.3.6. Responsible for interaction between aircrew members and mission support personnel and will establish a point-of-contact (POC) with the appropriate C2 agent prior to entering crew rest. Local C2 agents are responsible for coordinating mission support requirements on the PIC's behalf.

2.3.7. Responsible for the welfare of aircrew members, Mission Essential Personnel (MEP), passengers, and the safe accomplishment of the mission.

2.4. Mission Clearance Decision. The execution authority and PIC shall make the mission clearance decision. In all cases, final responsibility for the safe conduct of the mission rests with the PIC. If a PIC elects to delay a mission, that mission will not depart until the conditions that generated the decision to delay improve or are resolved. Further, no execution authority may task another PIC to take the same mission under the same conditions.

2.4.1. Only re-route or divert a mission when authorized by the execution authority, to resolve an emergency, or if required due to insufficient fuel or enroute or terminal weather conditions.

2.4.2. The agent that directed the re-route or divert shall ensure the aircraft is capable of executing departure, enroute, and destination arrival procedures.

2.4.3. The PIC will notify the appropriate C2 agent of any aircraft or aircrew limitation that may preclude re-route or divert.

2.4.4. When a C2 agent directs a PIC to fly to an alternate airfield, the agent will ensure existing and forecast weather for the alternate, Notices to Airmen (NOTAMs), and airfield information from the Global Decision Support System (GDSS)/Airfield Suitability and Restrictions Report (ASRR), is suitable. The agent will also consult DOD 4500.54G, the Foreign Clearance Guide (FCG) on SIPR and consult the Threat Working Group (TWG). If the alternate becomes unsuitable while enroute, coordinate with the C2 agent for other suitable alternates. The PIC is final authority for accepting a suitable alternate. A C2 agent will alert customs and all appropriate ground service agencies to prepare for arrival.

2.5. Operational C2 Reporting.

2.5.1. Stations With MAF C2 Agency. Local MAF C2 agents will enter mission data (arrival, departure, and advisory messages) in the MAF C2 system.

2.5.2. Stations Without MAF C2 Agency. Transmit mission data (arrival, departure, and advisory messages) to the controlling C2 agency by any means available (preference in the following order: DSN, HF, Iridium Phone, and Combat Track II (CTII)). For critical C2 communications, i.e. aircraft waiver request, maintenance delay, etc., voice communications are the primary method.

2.5.3. Enroute Reporting.

2.5.3.1. Make the following enroute calls to 618 AOC (TACC) or theater C2 agency, as required:

2.5.3.1.1. Airborne call when departing from a location without an AMC presence.

2.5.3.1.2. Maintenance call whenever aircraft alpha status changes to code 3, 4 or 5.

2.5.3.1.3. On aeromedical evacuation missions, no later than 45min prior to landing, to update arrival time and provide AF Form 3858, *Aeromedical Evacuation Mission Offload Message* information.

2.5.3.1.4. Uncoordinated aircraft interceptions via the most expeditious means available, after complying with guidance in the flight information handbook. When an airborne report is not accomplished, PICs must directly notify 618 AOC (TACC) upon landing. In all cases ensure local C2 and Intel agencies are informed.

2.5.3.2. Continental Unites States (CONUS). Periodic "ops normal" calls/transmissions are not required; however, the controlling C2 agency may increase reporting requirements.

2.5.3.3. Outside Continental Unites States (OCONUS). MAJCOM C2 agencies will specify increased reporting procedures through a communications plan in the OPLAN, OPORD, FRAG, Mission Directive, or FLIP. Aircrews will maintain listening watch in accordance with the communications plan within aircraft equipment capabilities (HF-Automatic Link Establishment (HF-ALE), CTII).

2.5.4. Aircraft Status/Maintenance Discrepancy Reporting. PICs shall report aircraft system malfunctions that traditionally require extensive trouble shooting as soon as feasible. Contact arrival C2 agency if available, otherwise contact MAJCOM C2 for relay.

2.5.5. "Thirty Minute" Out Call. Transmit a UHF or VHF arrival advisory to the destination C2 agency approximately 30 minutes prior to arrival. Provide Estimated Time in Blocks (ETB).

2.5.6. Integrated Flight Management (IFM) Sorties. On IFM sorties, the flight managers (FM) will be the C2 conduit for aircrews. The PIC must contact their Flight Manager prior to each IFM sortie. For critical C2 communications, voice communications are the primary method. ***EXCEPTION***: For AFRC/ANG missions using IFM, AFRC/ANG will provide C2.

2.5.6.1. Position Reporting on IFM Missions. IFM missions transiting oceanic flight information regions (FIRs) need to add the phrase "Pass to Hilda" to ATC position reports. Crews may also use the ARINC frequencies listed in the aircrew flimsy for C2 phone patch requirements. Use ARINC phone patch only after exhausting normal communication methods.

2.5.7. High Frequency (HF) Communications. HF is the primary means of access to the worldwide C2 network.

2.5.8. DV Messages. Airborne unclassified messages originated by DV passengers may be transmitted at the discretion of the PIC.

2.5.9. Iridium Phone. Iridium phones may be used for communications between aircrews and command and control agencies when beyond-line of sight C2 is required and other line of sight communications, HF or SAT-2000 do not provide proper security or timeliness. For more information, refer to AMC Iridium Satellite Phone CONOPS for Aircrews, **https://private.amc.af.mil/a3/a33/A33O/.**

2.5.9.1. Turn off Iridium phones within 25 feet of ground refueling operations.

2.5.9.2. Turn off Iridium phones during takeoff, approach, and landing.

2.5.10. Combat Track II. CTII provides two-way, beyond-line-of-sight (BLOS), secure communication text messaging between multiple ground and airborne nodes. It also provides in-flight following via automatic Global Position System (GPS) position reports displayed on standard digital navigation charts, when installed on the aircraft.

2.5.10.1. Employment. The aircraft equipment will be turned on during preflight/engine start and remain configured to transmit and receive at all times until aircraft power down upon mission completion.

2.5.10.2. Home Station. CTII units at home station are intended for training use only. Unless specifically designated by the C2 agency do not deploy with home station equipment.

2.5.10.3. Operational Missions. For operational missions, CTII will be provided at stage locations or deployed locations for missions requiring the capability. Every effort should be made to return the equipment to the stage location. Equipment stationed at a deployed location stays at that location as units rotate through.

2.6. Mission Commander (MC).

2.6.1. Unit commanders shall designate a MC when more than two aircraft are assembled to perform missions away from home station. Unit commanders should appoint a MC for special, high-visibility missions (i.e. CAPSTONE, DV2, etc.). The MC has overall responsibility and is the final authority for decisions that impact mission execution. The MC shall properly coordinate mission details. For flight-managed sorties, MC shall coordinate any special mission planning requirements with the IFM mission allocator not later than 24 hours prior to mission execution.

2.6.1.1. For MAJCOM-tasked missions, MAJCOM/A3/DO will coordinate and designate a lead planning agency when more than one unit is involved in an airdrop, or tactical airland operation. For AMC-tasked missions the planning agency is 618 AOC (TACC). For theater airlift missions with more than one airlift unit involved, the theater AOC shall designate a central planning agency responsible for coordinating the entire mission with all involved agencies. The OG/CC for the lead planning agency will designate an MC. The MC will be a rated (normally field grade) officer qualified in the type mission.

2.6.1.2. The MC will ensure all collocated aircrew members attend required briefings.

2.6.1.3. When non-collocated, the MC (in conjunction with the lead planning agency) will ensure non-collocated aircrew members receive applicable information, to include rendezvous, formation, abort, and recovery procedures. The MC will provide controlling agency and all non-collocated PICs anticipated delays or mission changes.

2.7. C2 Agency Telephone Numbers. Crewmembers may use the 618 AOC (TACC) toll-free number, 1-800-AIR-MOBL or DSN 312-779-0320 to contact other offices within the 618 AOC (TACC), including flight managers.

2.8. Close Watch Missions. Close Watch missions (for example, Combat Search and Rescue (CSAR); Aeromedical Evacuation (AE), PHOENIX BANNERs) receive special C2 attention. PICs will promptly notify appropriate C2 agency of delays, aborts, or other events that affect on-time departure. Provide the C2 agent the estimated time in commission (ETIC), planned ETD, and estimated time of arrival (ETA) within 10 minutes of the event or as soon as safety allows.

2.9. Law Enforcement Support. It is the policy of the Department of Defense (DOD) to cooperate with civilian law enforcement officials to the maximum extent practicable. AFI 10-801, *Assistance to Civilian Law Enforcement Agencies*, provides the policies and procedures service members must follow when supporting federal, state, and local civilian law enforcement agencies. Coordinate all civilian law enforcement authorities' requests for assistance through appropriate C2 channels.

2.10. Enroute Maintenance Support. 618 AOC (TACC)/XOCL will support all mobility aircraft requests for parts and/or maintenance assistance on USTRANSCOM/AMC missions. Refer to **paragraph 2.7** for 618 AOC (TACC) telephone numbers.

Chapter 3

AIRCREW COMPLEMENT/MANAGEMENT

3.1. General. This chapter provides guiding principles to form/manage mobility aircrews. Commanders at all levels shall follow these policies to form aircrews and to develop aircrew-related work/rest schedules that optimize efficiency of mobility forces engaged in worldwide operations.

3.2. Aircrew Complement. SQ/CCs shall form aircrews based on fragmentation order/mission directive, Crew Duty Time (CDT) and Flight Duty Period (FDP) requirements, aircrew member qualifications, and other constraints to safely accomplish the mission tasking. **Table 3.1** below summarizes crew position requirements for different crew types. ***EXCEPTION:*** Crew complement for specialized missions (e.g. Aerial Spray, Ski, and MAFFS) is addressed in the Addendas covering those missions

3.2.1. The minimum aircrew member complement for a local training flight is an aircraft commander, MPD pilot/copilot, flight engineer, and loadmaster. When a mission requires more than one aircrew member at a position, the SQ/CC will determine whether an instructor and NMR crewmember meet mission requirements.

3.2.1.1. **(Added-911AW)** A navigator is not required on local proficiency sorties to local training bases that have operational radar control. If thunderstorm activity is reported and/or forecast for the intended area of flight, a navigator is required.

3.2.1.2. **(Added-911AW)** A navigator is required on night local training sorties when accomplishing tactical approaches or NVG events.

3.2.2. SQ/CCs shall form augmented aircrews for missions planned to take longer than a basic CDT. Augmenting aircrew members must be current, qualified, and Mission Ready (MR) IAW AFI 11-2C-130V1, *C-130 Aircrew Training*. ***EXCEPTION:*** A NMR crewmember may augment provided the event(s) they are NMR in are not going to be performed on that flight. SQ/CC shall augment an aircrew for the full FDP. The MAJCOM/A3/DO may augment aircrews while the flight is underway. (see **paragraph 3.11**, Aircrew Management, for more on CDT/FDP.)

Table 3.1. Aircrew Complement.

Crew Position	Crew Complement		
	Basic	**Augmented**	**Tactical**
Aircraft Commander	1	2 (1)	1
Co-Pilot or MPD Pilot	1	1	1
Navigator	1 (2)	2	1 (2)

Flight Engineer	1	2	1
Loadmaster	1 (3)(4)	2	1/2 (5)

Notes:

(1) The PIC maintains ultimate responsibility of overall conduct of the mission. However, qualified aircrew in the seats when the PIC is not at the controls maintain responsibility for the actions they take. Transfer of pilot-in-command duties between qualified ACs will be briefed to the crew.

(2) Sq/CCs may authorize training/FCF/OCF flights without a navigator when not required for mission accomplishment. Units will establish procedures regarding the use of navigators on proficiency trainers. Formal Training Units (FTUs) will establish procedures regarding the use of navigators on all training missions.

Navigators are required for training mission conducted below 3000 ft AGL outside of radar control.

Navigators are not required when conducting Day/Night (unaided) LZ operations in the local area.

(3) Two loadmasters may be required, at the unit commander's discretion, depending on mission complexity.

(4) Two loadmasters or one loadmaster and another qualified crewmember are required if more than 40 passengers are scheduled to be carried (except during unit moves or contingencies). Both crewmembers must remain in the cargo compartment, one forward and one aft for takeoffs and landings, or as required by the tactical situation.

(5) Only one loadmaster is required for tactical missions (up to 13,999 feet MSL) if:

Using only one paratroop door for personnel or door bundle drops (less than 100 lbs);

Non-static line personnel are dropped from the ramp and door;

Dropping only simulated airdrop training bundles (SATBs);

A no-drop (dry pass) is planned and ground time is sufficient to permit on-load or offload by one loadmaster

Dropping a single CDS container unilaterally using manual gate cut procedures

3.2.3. An additional flight engineer or scanner may be used for basic or augmented crews in those units without loadmaster Unit Manning Document (UMD) authorizations, provided no more than 30 passengers are carried or cargo exceeds 500-lbs (100-lbs maximum per single item) or requires special handling in accordance with AFMAN 24-204/TM 38-250/NAVSUP PUB 505/MCO P4030.19I/DLAI 4145.3, *Preparing Hazardous Materials for Military Air*

Shipments, 1 Septebmer 2009. ANG/AFRC units may use an additional flight engineer provided these provisions are met.

3.2.4. Tactical Airlift Formation Lead Requirements.

3.2.4.1. Definitions:

3.2.4.1.1. Flight Lead crew: consists of a pilot and navigator who are either flight lead qualified or are receiving lead upgrade training from an instructor of like crew position. Can accomplish mission commander duties and can lead 2 or more aircraft.

3.2.4.1.2. Element Lead crew: consists of a pilot and navigator who are either element lead qualified or are receiving element lead upgrade training from an instructor of like crew position. Can lead a 2-ship or perform element lead duties in a multiple element formation.

3.2.4.1.3. Deputy Lead crew: a flight lead crew that is ready to assume formation lead duties if the formation lead aborts. A deputy lead is required for formations greater than 4 aircraft. Deputy lead may fly as the number 2 aircraft in the first element or may fly as second element lead as long as no other aircraft occupies the number 2 position. ***EXCEPTION***: IMC airdrops consisting of 3 or more aircraft always require a deputy lead AWADS crew.

3.2.4.1.4. AWADS crew: consists of a pilot and navigator who are either AWADS qualified or are receiving AWADS upgrade training from an instructor of like crew position.

3.2.4.1.5. An Element consists of 2 aircraft. A Flight consists of 3 or 4 aircraft.

3.2.4.2. Unilateral training Visual Meteorological Conditions (VMC) - no special requirements.

3.2.4.3. Unilateral training IMC.

3.2.4.3.1. Single-element formations. An element lead crew is required or one instructor pilot is required in the formation (any position). For IMC airdrops, an AWADS crew is required in the formation lead position.

3.2.4.3.2. Multiple-element formation. A flight lead crew or instructor pilot is required in the formation lead and deputy lead (if required) positions and in each flight lead position. Element lead positions require a flight lead crew, element lead crew or instructor pilot. If deputy lead or an element lead aborts after station time, any crew can assume their position with the concurrence of the mission commander. Any crew can fly the last ship of a formation even if it is a deputy lead or element lead position. For IMC airdrops, the deputy lead crew and every crew in a flight lead position must also be an AWADS crew. ***EXCEPTION*:** Multiple-element formation consisting of two aircraft (one in the flight lead and one in the element lead positions) may use single-element formation crew complement criteria specified in **paragraph 3.2.4.3.1**.

3.2.4.4. Other than unilateral (IMC and VMC). A flight lead crew is required in the formation lead and deputy lead positions (single element formations only require an element lead crew). Element lead positions require a flight lead or element lead crew.

Any crew can fly the last ship of a formation even if it is a deputy or element lead position. For IMC airdrops, every flight lead required crew must also be an AWADS crew.

3.2.5. NVG Aircrew Complements. An NVG crew will consist of an NVG certified crewmember in each of the primary crew positions (a crewmember in upgrade supervised by a qualified instructor meets this requirement). However, the pilots, navigator, and engineer may use NVGs even if the loadmaster is not NVG certified. Loadmasters may use NVGs even if the pilots, navigator, or engineer are not NVG certified.

3.2.6. Joint Precision Airdrop System (JPADS) Aircrew Complement. JPADS/I-CDS crews consist of JPADS XL certified basic airdrop crew and a PADS Operator (PO). Navigators can serve as a primary crew member and PO on C-130E/H aircraft. The PO does not have to be MDS qualified but must be a rated airdrop qualified officer. It is essential the PO receive a thorough briefing prior to performing duties on aircraft other than their primary MDS.

3.3. Aircrew Member Qualification. An aircrew member will be qualified, or in qualification training, to perform duties as a primary aircrew member.

3.3.1. Senior leaders who complete a Senior Officer Course (restricted AF Form 8, *Certificate of Aircrew Qualification*) or Senior Officer Familiarization (no AF Form 8) may occupy a primary crew position when under direct instructor supervision. Refer to AFI 11-401 for procedures and requirements governing senior leader flying.

3.3.2. Crewmembers who complete the Senior Officer Course will log "FP/FN" for Flight Authorization Duty Code on the AFTO Form 781, *ARMS Aircrew/Mission Flight Data Document*.

3.3.3. Crewmembers who complete a Senior Officer Familiarization will log "OP/ON" for Flight Authorization Duty Code on the AFTO Form 781. Refer to AFI 11-401 for passenger restrictions.

3.4. Pilots. An instructor pilot (IP) must supervise non-current or unqualified pilots regaining currency or qualification (direct IP supervision during critical phases of flight).

3.4.1. SQ/CCs shall augment the PIC for missions over 16 hours FDP and designate those additional pilots authorized to perform PIC duties. The PIC shall brief the aircrew on the plan to transfer PIC duties.

3.4.2. Missions With Passengers. Only current and qualified pilots (possessing an AF Form 8) will occupy pilot seats with passengers on board.

3.4.2.1. A non-current but qualified pilot under direct IP supervision may fly with passengers on board.

3.4.2.2. See **paragraph 9.1.3** for additional training restrictions.

3.4.3. An AWADS or IMC airdrop qualified AC will be in the seat during IMC personnel airdrops.

3.5. Navigators. SQ/CCs or deployed MCs may generate aircrews without a navigator when weather, enroute navigation (RNAV) capability, or mission requirements allow. SQ/CC may include two navigators on aircrews assigned to complex missions. A non-current or unqualified navigator may serve as a primary aircrew member on any mission when supervised by a

qualified instructor. The SQ/CC or MC will publish procedures for navigators to enplane/deplane on proficiency trainers.

3.5.1. An AWADS or IMC airdrop qualified navigator will be in the seat during IMC personnel airdrops.

3.5.2. Grid Navigator Requirement. SQ/CC shall include a grid-qualified navigator on aircrews tasked to fly north of 65°N latitude, south of 70°S latitude, or in airspace where FLIP enroute charts indicate compass indications may be erratic or depict airways, tracks, or navigational aids as oriented to true or grid north (i.e. Canadian Northern Airspace). ***EXCEPTIONS:*** 1) Flights within Alaskan airspace; 2) Flights on published airways using magnetic references (destination and alternates must have published magnetic instrument approaches) 3) Aircraft equipped with two or more operable independent navigational systems.

3.6. Flight Engineers, and Loadmasters. A non-current or unqualified flight engineer or loadmaster may serve as a primary aircrew member on any mission when supervised by a qualified instructor.

3.7. Aircrew Management. SQ/CCs and enroute C2 agents shall ensure work/rest cycles permit an aircrew adequate time to safely accomplish mission duties and personal time for rest.

3.7.1. Flight Duty Period (FDP). FDP is the period of time starting at mission report time and ending immediately after the aircrew completes the final engine shutdown of the day. SQ/CCs shall form aircrews based on worst-case FDP in the mission directive. Once enroute, the mission directive or C2 agent will inform the PIC of expected FDP at show time. Reduce FDP when the autopilot fails after departure IAW information below. If the autopilot fails after departure, consider mission requirements and determine the best course of action to preclude further mission delays due to reduced FDP. The best course of action may include diverting to an airfield with maintenance capability. Contact C2, coordinate intentions, and comply with limitations.

3.7.1.1. Basic Crew FDP. The maximum FDP for a basic aircrew is 16 hours (12 hours when the autopilot is inoperative). All tactical events will be accomplished within the first 12 hours of the FDP. Once an aircrew begins a basic FDP, only MAJCOM/A3/DO may extend to augmented day regardless of aircrew composition (MAJCOM/A3/DO shall augment basic crew to extend FDP).

3.7.1.1.1. When extended enroute ground times, non-optimum routing/winds, weather delays or other extenuating circumstances will increase a basic to an augmented FDP, a PIC with an augmented crew may accept an augmented FDP as long as:

3.7.1.1.1.1. The C2 agent or PIC discovers the extenuating circumstances before the first takeoff of the day.

3.7.1.1.1.2. The PIC verifies all augmenting aircrew members can get adequate rest enroute.

3.7.1.1.1.3. FDP may be further limited for crews in Individual Protective Equipment (IPE) such as the Aircrew Chemical Biological, Radiological, Nuclear (ACBRN) due to heightened ORM concerns. Aircrews members in IPE may

experience a degradation in flight duty performance due to increased fatigue and restrictions in situational awareness. Aircraft commanders must work closely with command and control personnel to ensure appropriate CDT and FDP are established when mission segments require IPE.See **Chapter 10** for additional guidance.

3.7.1.1.2. A PIC with a basic crew may seek MAJCOM/A3/DO (mission execution authority) approval to extend the FDP as much as 2 hours to complete a scheduled mission. Only use this provision to recover from unscheduled/unplanned enroute delays. C2 agents shall not ask PICs to exercise this option.

3.7.1.2. Augmented Crew FDP. Maximum FDP for an augmented aircrew is 18 hours (16 hours when the autopilot is inoperative). All transition or tactical events will be accomplished within the first 12 hours of the FDP. SQ/CC need only augment the pilot portion of the aircrew when the autopilot is inoperative.

3.7.1.3. Maximum FDP for nuclear airlift missions is IAW AFI 11-299, *Nuclear Airlift Operations.*

3.7.1.4. Flight examiners administering evaluations will not exceed an augmented FDP.

3.7.1.5. Training, Tactical, Joint Airborne/Air Transportability Training (JA/ATT), and Functional Check Flights/Acceptance Check Flights (FCFs/ACFs) FDP:

3.7.1.5.1. Maximum FDP for training, tactical, and FCF/ACF missions is 16 hours (12 hours when the autopilot is inoperative). Conduct the mission as follows:

3.7.1.5.2. Complete all mission-related events (i.e., FCF/ACF checks, transition events, or tactical events) during the first 12 hours of the FDP.

3.7.1.5.2.1. ANG and AFRC crews may perform all mission-related events on local training missions provided their time from start of Crew Duty Time (CDT)/FDP does not exceed 16 hours.

3.7.1.5.2.1.1. CDT and FDP include both military duty and civilian work. CDT and FDP begin when an individual reports for their first duty period (military or civilian).

3.7.1.5.3. Crews may fly/deposition to home station or a deployed staging base following training (do not exceed 12 hours when the autopilot is inoperative).

3.7.2. Crew Duty Time (CDT). CDT is that period of time an aircrew may perform combined ground/flight duties. Plan the mission so aircrew members may complete post-mission duties within maximum CDT. An aircrew member may perform mission-related duties for other missions when approved by member's home station SQ/CC or equivalent. Maximum CDT is 18+00 hours for a basic aircrew and 20+00 hours for an augmented aircrew.

3.7.3. Except as outlined below, CDT/FDP begins 1 hour after aircrew alert notification. SQ/CC or equivalent may task aircrew members to perform other duties before they begin flight-related duties or MAJCOM/A3/DO may authorize a C2 agent to alert an aircrew member early. Begin CDT/FDP when the first aircrew member reports for those duties.

3.7.3.1. Crews may self-alert with C2 concurrence prior to entering crew rest. The PIC must coordinate approval for the self-alert time before entering crew rest. Begin CDT/FDP when the first aircrew member reports for duty.

3.7.3.1.1. C2 approval authority is 618 AOC (TACC) for AMC and AMC-gained missions.

3.7.3.2. CDT/FDP Extensions. See AFI 11-202V3, *General Flight Rules.*

3.7.4. Mission Essential Personnel (MEP) Time. IAW AFI 11-401, MAF aircrew members may travel as MEP (not required for the mission being flown but required for follow-on missions). MEP will not be listed on the AFTO Form 781, will not log time, and will not accrue OFDA credit. Crewmembers may travel as MEP for a maximum of 24 hours. OG/CC or equivalent may approve crewmembers to travel as MEP in excess of 24 hours.

3.7.4.1. Current/qualified aircrew members may perform primary aircrew duties after traveling in MEP status, provided they do not exceed a basic FDP (FDP starts at time of first official duty or report time for flight in MEP status).

3.7.4.2. Aircrew members may travel in MEP status after performing primary crew duties, for a maximum of 24 hours from the time the crewmember's FDP began.

3.7.5. Aircrew Member Support of Aircraft Generation Activities (Pre-flight, cargo up-/off-load, start, and taxi aircraft). Crew rest is required IAW AFI 11-202V3. The duty day begins when the aircrew member reports for official duties.

3.8. Scheduling Restrictions. IAW AFI 11-202V3. In addition, SQ/CCs shall not schedule an aircrew member to fly nor will an aircrew member perform aircrew duties:

3.8.1. When the flight will exceed maximum flying time limitations of AFI 11-202V3.

3.8.2. Within 12 hours of consuming alcoholic beverages (based on scheduled takeoff, or ALFA standby force legal for alert time, or earliest show time from BRAVO alert) or while impaired by its after effects.

3.8.3. When using nasal sprays to treat symptoms of head congestion existing before flight. An aircrew member may use oxymetazoline or phenylephrine nasal sprays as "get-me-downs" following an unexpected ear or sinus block during flight. Following use, crewmember will be considered DNIF until cleared by a flight surgeon.

3.9. Fatigue Countermeasures Management Program. (See also **paragraph 5.31**).

3.9.1. AMC/A3 will establish policy for implementation of the Fatigue Countermeasures (CM) Management Program and ensure compliance with its provisions, and AMC/SG will provide clinical oversight, guidance and materials for fatigue CM education and mitigation.

3.9.2. OG/CCs will ensure Unit Operational Risk Management (ORM) programs include use of the basic fatigue countermeasures found in the AvORM worksheet. Both the manual and automated "MAF Mission Aviation ORM Worksheet" incorporate a fatigue CM risk assessment model. They are available on the AMC/A3V website under the "Pubs" tab, "Operational Risk Management (ORM)" section, and will be used by all three tiers of mission planners, as well as aircrew during the mission execution phase.

3.9.3. Flight surgeons or Aerospace/Operational Physiologists will use the AMC-approved (lead command) fatigue CM training CDs and pamphlets provided by AMC/SGP to educate their operational fliers in venues such as clinic visits, flight physicals, Safety Down Days, pre-deployment briefings, readiness training, Commanders' Calls, First-Term Airmen Courses, base orientations and safety meetings.

3.9.4. The primary fatigue CM available to aircrew members is appropriate management of their sleep/rest cycles. Secondary CM include smart scheduling procedures aimed at managing those cycles, strategic inflight and/or ground napping techniques, and proper diet and exercise.

3.9.5. An additional fatigue CM tool available to aircrew is the No-Go Pill. The occasional use of a No-Go Pill by MAF aircrew to improve sleep quality and/or adjust circadian rhythm sleep/wake cycles is voluntary. Each individual aircrew member will, with the aid of their home station flight surgeon, determine how/if to implement the use of No-Go Pills as a fatigue CM.

3.9.6. The following directives concerning the use of No-Go Pills are as important and unbreakable as the "12 hour bottle to throttle" restriction for alcohol consumption:

3.9.6.1. Aircrew members on flight orders will not use No-Go Pills in flight.

3.9.6.2. Aircrew members will complete ground testing for any No-Go Pill they wish to use for operational purposes and document using MAF No-Go Pill Form 1, *Ground Testing of No-Go Pills*. In order to avoid possible drug interactions, aircrew members will inform the flight surgeon of any over-the-counter medications and/or nutritional supplements they are taking. During ground testing, aircrew members will be DNIF on an AF Form 1042 for the minimum 'DNIF' periods prescribed in **paragraph 3.9.6.4**. After ground testing of a particular No-Go Pill, the flight surgeon will complete the bottom half of the Form 1 and a "return to fly" AF Form 1042. Successful ground testing of a particular No-Go Pill establishes clearance to use it operationally.

3.9.6.3. Aircrew members may obtain NoGo Pills from any USAF or other authorized flight surgeon while at home station or off-station while TDY/deployed. Off-station/deployed flight surgeons can verify individual aircrew ground testing results via the "MAF Aircrew Medication Ground Test Card" all MAF aircrew members are required to carry.

3.9.6.4. In no case will an individual perform aircrew duties while under the effects of No-Go Pills. Individuals will use the mission report or legal for alert time to determine the latest time to take a No-Go Pill. No-Go medications can affect individuals very differently. To comply with the "no aircrew duties while under the effects" restriction, it is the responsibility of each individual aircrew member to be aware of their own minimum 'DNIF' period for any No-Go Pill they use, based on their ground trial results and/or previous experiences. The following are the minimum 'DNIF' periods (no AF Form 1042 required) after consuming a No-Go Pill:

3.9.6.4.1. Sonata (Zaleplon) – 4 hours minimum 'DNIF'

3.9.6.4.2. Ambien (Zolpidem) – 6 hours minimum 'DNIF'

3.9.6.4.3. Restoril (Temazepam, Class IV Controlled Substance) – 12 hours minimum 'DNIF'

3.9.6.5. Aircrew members will consider the following examples of missions prone to causing fatigue and/or sleep disruptions in their decision to use a No-Go Pill:

3.9.6.5.1. Home station night launch missions with 2000-0530L show times and greater than four hours' duration.

3.9.6.5.2. Crew rest facilities lacking an optimal (i.e., quiet, air-conditioned, darkened) sleeping environment.

3.9.6.5.3. Off-station missions that are four or more time zones from home station.

3.9.6.5.4. Rotating or stair-stepped flying schedules with greater than 6-hour flight time duration.

3.9.6.5.5. Missions that run consistently near a 12 to 14 hour duty day.

3.9.6.6. The MAF's worldwide mobility mission makes accountability for this program challenging; therefore, the following are aircrew member responsibilities:

3.9.6.6.1. Aircrew members will not operate heavy equipment during the minimum 'DNIF' period for each No-Go Pill outlined in **paragraph 3.9.6.4**.

3.9.6.6.2. Aircrew members will not take No-Go Pills within 12 hours of consuming alcohol, as their combined use unpredictably increases the effects of both.

3.9.6.6.3. Aircrew members will limit use of Ambien (Zolpidem) and Restoril (Temazepam) to a maximum of seven consecutive days and no more than 20 days in a 60-day period. Flight surgeons should prescribe 60 days' worth of medication (20 pills) at a time if requested by the aircrew member, unless clinically inadvisable.

3.9.6.6.4. Aircrew members will limit use of Sonata (Zaleplon) to a maximum of 10 consecutive days and no more than 28 days in a 60-day period. Flight surgeons should prescribe 60 days' worth of medication (28 pills) if requested by the aircrew member, unless clinically inadvisable.

3.9.6.6.5. If an aircrew member uses Sonata in combination with either of the other types of No-Go Pills, the seven consecutive days and 20-days in a 60 day period restrictions apply (overrides the 10 consecutive days and 28 days in a 60-day period for Sonata).

3.9.6.6.6. Aircrew members may consume more than one No-Go Pill in a 24-hour period, if operationally necessary. A second No-Go Pill of the same or different type will not be consumed while in the minimum 'DNIF' period for the previous pill.

3.9.6.6.7. The "MAF No-Go Pill Usage/Refill Form" will be used to document No-Go Pill use and refill authorization, and placed in the aircrew member's medical record. Non-duty station flight surgeons will forward the form to the aircrew member's home station aerospace medicine clinic to be placed in their medical record. Flight surgeons will immediately discuss any concerns about an aircrew member's use of No-Go Pills with the individual's commander if any question of misuse arises.

3.9.6.6.8. Aircrew members on Personnel Reliability Program (PRP) status will follow PRP notification procedures if prescribed No-Go Pills.

3.10. Crew Rest/Enroute Ground Time. OG/CCs shall establish procedures to place crewmembers in crew rest. MAJCOM/A3/DO may waive any portion of the crew rest period or ground time as needed to meet mission tasking.

3.10.1. Home-Station Pre-Departure Crew Rest. For missions that will keep aircrew members off station 16 hours or more, unit commanders will enter aircrew members into pre-departure crew rest 24 hours before the legal for alert time. Aircrew members may perform limited non-flying duties like mission planning during the first 12 hours of pre-departure crew rest. OG/CCs may waive any portion of the first 12 hours of pre-departure crew rest. Do not manifest aircrew members as passengers to deny pre-departure crew rest. ***EXCEPTION:*** AFRC, ANG, and AETC in accordance with AFI 11-202V3 and appropriate supplement.

3.10.2. Off-station/Enroute Crew Rest. The minimum enroute crew rest period is 12 hours before legal for alert or scheduled report time when self-alerting.

3.10.2.1. Except during emergencies or as authorized by MAJCOM/A3/DO, C2 agents shall not disturb an aircrew member in crew rest. When necessary to interrupt aircrew members' crew rest period, re-enter that aircrew in a subsequent minimum 12 hour crew rest period after they complete official duties.

3.10.2.2. Do not enter aircrew members into crew rest until they complete official post-flight duties. Those duties may include, but are not limited to, refueling, cargo on-/off-load, aircrew arming, minor maintenance, or mission debriefing.

3.10.3. Off-station/Enroute Ground Time. Mobility planners shall provide aircrews at least 16 hours (nuclear airlift missions will be IAW AFI 11-299) ground time between engine shutdown and subsequent takeoff.

3.10.3.1. Mission planners, PICs, or C2 agents may modify ground time as follows:

3.10.3.1.1. In the interest of safety.

3.10.3.1.2. To start (mission reporting time) no earlier than 12 hours from the time the aircrew entered crew rest. Before reducing ground time, PICs will consider time to complete mission planning, cargo on-/off-load, and non-standard mission related duties. C2 agents will not ask PICs to accept less than 16 hours ground time.

3.10.3.2. Mobility planners should construct mission itineraries with enroute ground times longer than 16 hours to afford aircrew members opportunities to recover from the cumulative effects of fatigue caused by flying on several consecutive days or due to transiting several time zones. If practical, make the enroute ground time 36 hours (maximum) after three consecutive near maximum FDPs.

3.10.4. Crew Enhancement Crew Rest (CECR). CECR is not an alternative to a safety-of-flight delay but provides PICs a means to minimize the adverse effects of a crew alert and report period outside normal duty time. CECR periods should be of minimum duration and are normally used during de-positioning legs. Tasking authorities shall approve requests to delay alert time to normalize the work-rest cycle or increase messing options when mission

allows. When requests are disapproved, the C2 agent will inform the PIC of the reason for disapproval.

3.10.5. Post-Mission Crew Rest (PMCR). SQ/CCs shall give aircrew members returning to home base sufficient time to recover from cumulative effects of the mission and tend to personal needs. PMCR begins upon mission termination. (N/A AFRC, and ANG).

3.10.5.1. For missions that keep an aircrew off station 16 or more hours, the SQ/CC shall provide 1 hour (up to 96 hours) PMCR for each 3 hours off-station. Do not enter aircrew members in pre-departure crew rest until the PMCR period expires.

3.10.5.2. PMCR is not applicable to continuing missions and MAJCOM/A3/DO may suspend PMCR during contingency operations.

3.10.5.3. OG/CCs (or equivalents) are PMCR waiver authority.

3.10.6. Crew Chief Work/Rest Plan. While on Temporary Duty (TDY), the deployed crew chief or MEP maintenance technician shall report to the PIC. The PIC shall ensure the crew chief has sufficient time in each 24-hour period to get 8 hours of uninterrupted rest. See AFI 21-101, *Aircraft and Equipment Maintenance Management*, for detailed guidance.

3.10.7. The lead USAF component will publish MAJCOM/A3/DO-approved crew rest criteria in the Exercise or Contingency Operation Order (OPORD), Operation Plan (OPLAN) or Concept of Operations (CONOPs).

3.10.8. The Prime Knight program streamlines the process of getting aircrews from aircraft parking ramp into lodging/crew rest. It is only successful when billeting agents receive accurate aircrew/mission information in a timely manner.

3.10.8.1. C2 Agent Responsibilities. A MAJCOM C2 agent will forward information on the departing aircrew's orders to a point of contact (POC) for the next crew rest location's Prime Knight function.

3.10.8.2. PIC Responsibilities. If departing from a location with a C2 agency, ensure a C2 agent has accurate aircrew/mission information to forward to the next Prime Knight POC. If departing from a facility without a C2 agency, the PIC will call the next crew rest location Prime Knight POC to pass aircrew/mission information.

3.10.8.3. SQ/CC or designated authenticating official shall ensure TDY/Flight orders clearly indicate the unit fund cite so that the PIC may make Prime Knight reservations in advance. Without a unit fund cite on the TDY/Flight orders, the PIC must make advance reservations using a government travel card to participate in the Prime Knight program.

3.11. Alerting Procedures. MAJCOM C2 agents shall establish a legal for alert time with the PIC and when appropriate, the Medical Crew Director (MCD) of Aeromedical Evacuation (AE) crews. Whenever possible, C2 agents will inform PICs and MCDs of aircraft status, expected patient up load time, and other pertinent mission details that will streamline mission launch.

3.11.1. Aircrew alert time is normally 3+15 hours before scheduled takeoff time (allows 1 hour for reporting and 2+15 hours for mission preparation). Individual locations may increase or decrease this time depending on specific capabilities. OG/CCs may establish self-alert procedures for local training missions.

3.11.1.1. For missions with more than minimum ground time, the PIC may arrange an alert time that provides additional preparation time to accomplish the mission. The PIC may also accept alerting with reduced preparation time when the mission allows. In all cases, the PIC shall coordinate changes to standard alerting times with the appropriate C2 agency.

3.11.1.2. With PIC agreement and when cargo load warrants (i.e. TO 1C-130A-9, *Cargo Loading Manual*, Chapter 6), C2 agents may alert loadmasters up to 2 hours before normal alert time. When early alerting is warranted, the PIC and C2 agent must notify the loadmaster before he/she enters crew rest. Do not alert the loadmaster more than 1 hour before beginning cargo up load. Base the aircrew FDP on the loadmaster's show time.

3.11.1.3. C2 agents shall not alert an aircrew until the aircraft is in commission or there is reasonable assurance that maintenance technicians will complete repairs that allow the aircrew time to pre-flight and load the aircraft to meet the target takeoff time.

3.11.1.4. C2 agents shall not alert outbound crews when inbound aircraft is on A-2 or A-3 status until maintenance technicians determine required parts are available and the aircraft will be repaired within the target ground time.

3.11.1.5. Self-Alerts. Crews will self-alert at locations without a C2 agency, but must coordinate with controlling C2 agency or the 618 AOC (TACC). 618 AOC (TACC) is the approval authority for AMC and AMC-gained missions. With C2 approval, the PIC may elect to self-alert on operational missions at locations with a C2 agency. Crews will coordinate alert times with appropriate C2 agents to avoid FDP limitations that result from unexpected changes in the mission.

3.11.2. The aircrew release policy is as follows:

3.11.2.1. On the aircrew's initial entry or re-entry into crew rest, the controlling C2 agent, or PIC during self-alerts, will establish an expected alert time.

3.11.2.2. For all missions, the latest allowable alert time is 6 hours after the expected alert time. The PIC may extend that window to 8 hours when flying as primary crew or 12 hours when in MEP status. The controlling C2 agent will not ask the PIC to accept more than the 6 hour window. ANG/ AFRC aircrew members may extend the window as necessary to fly in MEP status to home station to meet the Firm Scheduled Return Time (FSRT).

3.11.2.3. When a C2 agent determines circumstances will not allow for aircrew alerting during the legal for alert window, at that time but not earlier than the expected alert time, the C2 agent will contact the PIC and establish a new expected alert time at least 12 hours from the time of notification.

3.11.2.4. If the mission cannot depart within 4+00 hours of any scheduled takeoff, the PIC may continue the mission after a thorough re-evaluation of all ORM factors. The controlling C2 agent will not ask the PIC to accept a takeoff outside of the 4 hour window. The PIC will coordinate with C2 to continue the mission or enter crew rest and establish a legal for alert time.

3.12. Stage Management.

3.12.1. Stage Posture. Stages operate on a positive launch principle. C2 agents shall alert aircrews using the following priority/hierarchy:

3.12.1.1. Aircrews that require an emergency return to home station.

3.12.1.2. De-positioning stage crews will be prioritized by their SRTs.

3.12.1.3. Aircrews in sequence of arrival time.

3.12.1.4. If the stage manager returns an aircrew in the stage to crew rest because of a mission delay or abort, that aircrew becomes first out when legal for alert.

3.13. Standby Force Duty. Only MAJCOM C2 shall task units for ALFA, BRAVO, CHARLIE standby force duty. MAJCOM C2 Agents shall task units for Standby Force Duty not later than 18 hours prior to legal for alert time. This allows crewmembers 12 hours of pre-standby crew rest and 6 hours for aircraft pre-flight duty. If MAJCOM C2 agents are unable to provide 18 hours prior notification, SQ/CC shall place the pre-standby crew in 12 hour crew rest and follow aircraft generation procedures in **paragraph 3.7.5** to prepare the aircraft for launch. SQ/CC may keep an aircrew in ALFA/BRAVO status up to 48 hours. MAJCOM/A3/DO may extend this period for contingencies. By the completion of an alert period, launch, release, or re-enter aircrew into 12 hour pre-departure crew rest. OG/CCs may provide additional local procedures for management of Standby Force Duties.

3.13.1. ALFA Standby Aircraft Preflight Generation and Security. When tasked, SQ/CC shall posture an aircraft and aircrew as an ALFA Standby Force able to launch within 1 hour. The following procedures apply to primary aircraft as well as spare aircraft generated for ALFA alerts. A maintenance Dash -6 and aircrew Dash -1 preflight must be completed. Preflight validity will be in accordance with applicable T.O. After the preflight, the PIC will notify the controlling agency. The aircraft will remain in a sealed posture and be referred to as “cocked on alert”. Documentation of when the aircraft was cocked on alert must be placed in the forms. The PIC will ensure the aircraft is secure before entering crew rest. Secure all hatches and doors to show unauthorized entry. Close and lock the crew entrance door with a lock or other controllable device, which will prevent entry without damage to the door or lock. The aircrew preflight portion remains valid if performed by one crew, cocked on alert, and launched by another crew. Uncocking a generated aircraft is not a standard procedure but may be accomplished on a case by case basis. The PIC or a designated aircrew representative must be present if access to the aircraft is required. Ensure command and control and the controlling agency are notified when uncocking and recocking generated aircraft. Follow-on pre-flights done during normal waking hours do not interrupt crew rest. Begin CDT/FDP when C2 agent directs the aircrew to launch from crew rest or while performing pre-flight (begin CDT/FDP when the aircrew arrived at the aircraft to do the pre-flight).

3.13.2. BRAVO Standby Force. When tasked, SQ/CC shall posture an aircraft and/or aircrew in BRAVO Standby Force to permit launch within 3 hours. Follow-on pre-flights, if required, interrupt crew rest. Begin CDT/FDP when aircrew shows for duty.

3.13.3. CHARLIE Standby Force. When tasked, SQ/CC shall posture aircrews as a CHARLIE Standby Force ready to enter crew rest within 2 hours. Tasked aircrews will be legal for alert 12 hours after entering crew rest. SQ/CC may keep aircrews in CHARLIE

status up to 72 hours. After 72 hours, release aircrews or enter them into 12 hours crew rest for directed mission, training mission, or subsequent standby force duty.

3.13.4. Wing Standby Force. OG/CC may place aircrews in Wing Standby status. After a 12 hour pre-departure crew rest period, aircrews are legal for alert for 12 hours and must be able to launch within 3+15 hours. After 12 hours, launch, release, or re-enter aircrews in 12 hour crew rest period before subsequent 12 hours Wing Standby duty.

3.13.5. Post-Standby Missions. On completion of standby duty, aircrew members may be dispatched on a mission. If started, post-standby crew rest must be completed before the start of pre-departure crew rest. If an aircrew member is dispatched on a mission, compute the post-mission crew rest time on standby time plus mission time.

3.13.6. Post Standby Crew Rest. Aircrew members not dispatched on a mission following standby duty will receive post-mission standby crew rest as follows:

3.13.6.1. If standby duty is performed away from normal quarters, crew rest time is computed from this standby time on the same basis as for mission time.

3.13.6.2. If standby duty was performed in normal quarters, no crew rest time is authorized.

3.14. Orientation Flights and Incentive Flights. Refer to DOD 4515.13-R, *Air Transportation Eligibility*, AFI 11-401, and the appropriate MAJCOM supplement.

3.15. Interfly.

3.15.1. Formation interfly. Aircraft are authorized to interfly in the same formation provided a thorough mission brief is conducted between all participants and any local/command procedures are discussed.

3.15.2. Crewmember/aircraft interfly. Interfly is a temporary arrangement between OG/CCs or equivalent to permit the exchange or substitution of aircrew members/aircraft between mobility units to accomplish flying missions. Interfly will be limited to specific operations, exercises, or special circumstances. However, it may be used for events of longer duration such as unit conversion to another model design series (MDS). Participating aircrews will use guidelines established by the host command or as specified in the OPLAN or CONOPS. ***EXCEPTION:*** AE crewmembers are exempt from interfly requirements.

3.15.2.1. Associate units. All associate units will act IAW their association agreement.

3.15.2.2. Approvals:

3.15.2.2.1. AFRC. AFRC/A3 has delegated interfly approval authority to unit OG/CCs for active duty/ANG interfly with AFRC and AFRC to AFRC interfly. Units utilizing this authority will inform AFRC/A3V.

3.15.2.2.2. ANG. NGB/A3 has delegated approval authority to Wing Commanders for active duty/AFRC interfly with ANG, and OG/CC approval authority for ANG to ANG interfly.

3.15.2.2.3. Interfly does not apply to the formal attachment of aircrew members flying with AFRC/ANG units for the sole purpose of continuation training. Formal

attachment of aircrew members will be IAW AFI 11-401 and the AFRC/ANG Supplement AFI 11-401.

3.15.2.3. Requirements

3.15.2.3.1. Aircrew members shall be current and qualified in the MDS variant as well as unique systems or configuration required to fly the aircraft/mission unless under the direct supervision of an instructor.

3.15.2.3.2. Each affected OG/CC who commits resources (personnel or aircraft) must concur with interfly proposal.

3.15.2.3.3. MDS conversion training. Units may request an interfly agreement for duration of their conversion. OG/CCs will forward interfly requests to individual OG/CCs for approval. Requests will include as a minimum a list of affected units, duration of the agreement, and purpose.

3.16. Mission Essential Personnel (MEP). Procedures and policies regarding MEP are contained in AFI 11-401 and AMCI 11-208 *Tanker/Airlift Operations*. PICs will ensure personnel traveling in this status are properly authorized. Crewmembers qualified in mobility aircraft are authorized MEP status on any mobility aircraft to pre/de-position in support of mobility operations. MAJCOM designated crewmembers who are assigned or authorized to accompany the normal crew compliment are allowed MEP status.

3.16.1. Crewmembers in MEP status are not authorized to:

3.16.1.1. Displace manifested passengers.

3.16.1.2. Maintain currency and/or log flying time.

3.16.1.3. Use for transportation while on leave. ***EXCEPTION***: ANG/AFRC Air Technicians may be in a civilian leave status while traveling enroute to perform in a military duty status.

3.16.1.4. Travel on Special Air Missions/Command Support Mission (SAM/CSM) aircraft unless authorized by HQ AF/CVAM through the PIC.

3.16.1.5. Travel on Special Assignment Airlift Missions (SAAM) when specifically restricted by the mission directive.

3.16.1.6. Travel on Operational Support Airlift (OSA) aircraft unless authorized by Joint Operational Support Airlift Command (JOSAC) through the PIC.

3.16.2. All MEPs require valid travel/flight orders or supporting message authorizing MEP status. OG/CCs may authorize MEP status for their mobility aircrews.

3.16.3. Flight evaluators have priority and will not be displaced by any other MEP. The priority for evaluators is MAJCOM, NAF, group, and then squadron level.

3.16.4. MEPs normally travel in the crew compartment. If the number of MEPs desiring travel exceeds the capacity of the crew compartment, the C2 agency will notify the ATOC, who in turn will coordinate with the passenger terminal; seats not previously assigned may be used for MEPs.

3.16.5. The PIC, or designated representative, will brief MEPs on seat assignment, appropriate mission information, emergency procedures including egress, and armed crewmembers. The PIC may assign an MEP aircrew-related duties for which the MEP is qualified.

3.16.6. MEPs will coordinate their travel with the appropriate C2 agency prior to travel. They will process through the C2 agency as early as possible but NLT 3 hours prior to planned block time.

3.17. Mission Mobility Observers (MMO). MAJCOM supplements or additional directives may establish programs authorizing senior military and civilian personnel to fly for mobility mission familiarization.

3.18. Flight Attendants on Distinguished Visitor Missions. Flight attendants may fly as primary crewmembers on designated C-130 missions. They fall under the authority of the PIC, or MC (if assigned), throughout the mission. An egress briefing will be given to the flight attendants prior to the first mission leg.

Chapter 4

AIRCRAFT OPERATING RESTRICTIONS

4.1. Objective. Redundant systems may allow crews to safely perform some missions when a component/system is degraded. The PIC is the final authority in determining the overall suitability of an aircraft for the mission. The PIC will ensure a detailed explanation of the discrepancy is entered in the AFTO Form 781A, *Maintenance Discrepancy and Work Document*; include the following maintenance identifiers to effectively communicate aircraft status.

4.1.1. Mission Essential (ME). The PIC will designate an item, system, or subsystem component essential for safe aircraft operation as ME.

4.1.2. Mission Contributing (MC). The PIC will designate an item, system, or subsystem component, which is not currently essential for safe aircraft operation as MC. These discrepancies should be cleared at the earliest opportunity. If circumstances change or mission safety would be compromised, re-designate as ME. Do not delay a mission to clear a MC discrepancy.

4.1.3. Open Item (OI). The PIC will designate discrepancies not expected to adversely impact the current mission or any subsequent mission as an OI. These items are normally cleared at home station.

4.2. Minimum Equipment List (MEL) Policy. The MEL is a pre-launch document that lists the minimum equipment/systems to operate the aircraft. It is impractical to prepare a list that would anticipate all possible combinations of equipment malfunctions and contingent circumstances. Consider equipment/systems with no listed exceptions as grounding items. A PIC who accepts an aircraft with degraded equipment/systems is not committed to subsequent operations with the same degraded equipment. PICs are not committed to operations with degraded equipment accepted by another PIC.

4.2.1. The PIC shall account for the possibility of additional failures during continued operation with inoperative systems or components. The MEL is not intended for continued operation over an indefinite period with systems/subsystems inoperative.

4.2.2. All emergency equipment will be installed unless specifically exempted by mission requirements/directives.

4.2.3. Waiver Policy. A PIC prepared to operate with a degraded MEL item shall request a waiver through C2 channels. The PIC shall provide the C2 agent: 1) nature of request, 2) individual crew member qualification, 3) mission leg(s) requiring the waiver, and 4) the governing directive of waiver request to include volume, chapter, or paragraph. Initiate waiver requests as soon as possible; plan at least a 1-hour waiver process time.

4.2.4. PICs operating with waiver(s) for degraded equipment shall coordinate mission requirements (i.e., revised departure times, fuel requirements, maintenance requirements, etc.) with the controlling C2 agency and/or flight manager.

4.2.5. If beyond C2 communication capability, or when it is necessary to protect the crew or aircraft from a situation not covered by this chapter and immediate action is required, the PIC may deviate according to **paragraph 1.4**. Report deviations (without waiver) through

channels to MAJCOM/A3/DO within 48-hours. OG/CCs shall collect background information and submit a follow-up written report upon request.

4.3. Waiver Protocol. Waivers to operate with degraded equipment are granted on a case-by-case basis. The PIC determines the need for a waiver after coordinating with the lowest practical level of command. MEL waiver authority is as follows:

4.3.1. Training Missions. OG/CC or equivalent with mission execution authority.

4.3.2. MAJCOM Directed Missions. MAJCOM/A3/DO with mission execution authority. Initiate the request with MAJCOM C2 agency.

4.3.2.1. The 18 AF/CC is the waiver authority for active duty, AFRC, or ANG units flying 618 AOC (TACC)-directed missions (includes Operational Readiness Inspections). The MEL waiver authority has been delegated to AMC/A3V. Contact HQ AMC/A3V through 618 AOC (TACC).

4.3.3. Contingency Missions. COMAFFOR (or equivalent) for the agency with C2, if not specified in the OPORD/Tasking Order.

4.3.4. ANG or AFRC Directed Missions. ANG or AFRC maintains C2 and waiver authority for ANG or AFRC directed mission prior to mobilization. NGB/A3 delegates waiver authority to the unit OG/CC.

4.3.5. Other Than MEL Waivers. Determine governing source document (i.e. AFI, Flight Manual, Maintenance T.O., etc.) to ascertain the waiver authority. Use C2 channels to notify the appropriate waiver authority. Waivers of this nature may require an extended response time.

4.3.6. Engineering Dispositions (ED). Dispositions are requested when aircraft are damaged and/or established maintenance technical order procedures cannot be followed or do not exist. The on-site maintenance authority is responsible for requesting Engineering Dispositions. Most EDs allow maintenance to repair the aircraft and return it to unrestricted status; dispositions of this nature do not concern aircrews. However, EDs affecting aircrew operations require MEL waiver authority approval.

4.3.6.1. PICs shall coordinate dispositions containing flight restrictions, prohibitions, additional operating limits, or modified/nonstandard operating procedures with the appropriate MEL waiver authority (see **paragraph 4.3**).

4.3.6.2. PICs will not accept dispositions appearing incomplete, in error, or unsafe. Prior to rejecting a disposition, the PIC will contact the appropriate MEL waiver authority. The waiver authority will attempt to resolve the issue. ***NOTE:*** Deviations from the flight manual requires approval IAW the flight manual.

4.4. Technical Assistance. The PIC may request technical support and additional assistance from their home unit or MAJCOM C2 agency.

4.5. MEL Table Definitions/Column Identifiers. MEL tables are arranged by aircraft system to provide the PIC a mechanism to determine minimum system requirements. Components are listed by number installed and minimum required for flight. Requirements are defined by Home Station Departure/Main Operating Base (MOB) (Column A) and enroute (Column B). An asterisk (*) in the Required column indicates the number required is situation dependent; refer to

the Remarks/ Limitations/Exceptions column for clarification. Aircraft commanders will determine if the asterisk (*) applies. Lead command/MAJCOMs will designate MOBs as required. AMC and AMC-gained aircrews will consider Little Rock AFB as a MOB. PACAF and PACAF-gained aircrews will consider Yokota AB and Joint Base Elmendorf-Richardson as MOBs. Aircrews transiting a MOB on the retrograde portion of a mission may treat a MOB as an enroute location. For example, a C-130 transiting Little Rock AFB enroute to Lajes AB will use Column A. However, when transiting Little Rock AFB enroute to home station (de-positioning) use Column B. Column B requirements will not normally be waived when transiting a MOB on a de-positioning leg. Local training missions, to include off-station trainers and JA/ATTs, fall under Column B. Asterisk items marked "Shall be repaired at the next repair capable facility" for column B are required for local training operations.

4.5.1. Remarks/Limitations/Exceptions. Some technical information and procedures are contained in this column. This is not all-inclusive; crewmembers shall refer to the flight manual and other directives for procedures, techniques, limitations, etc.

4.5.1.1. One-time Flight Clarification: A Red X discrepancy must be downgraded through maintenance channels prior to flight. MEL waiver may still be required. This condition does not preclude carrying cargo and passengers unless stipulated otherwise by the waiver. The priority is to move the airplane to a repair capable facility. PICs must coordinate with appropriate agencies to ensure repair capability exists at the destination. One-time flights may include enroute stops only when necessary to recover the airplane. ***Example***: An airplane departs on a gear-down flight from Djibouti IAP and requires an enroute fuel stop (Cairo) before landing at the nearest repair capable facility, Sigonella NAS.

4.5.1.1.1. One-time flight to nearest repair capable facility: Flight is limited to the nearest (shortest enroute time) repair capable base.

4.5.1.1.2. One-time flight to a repair capable facility: Flight is not restricted to the nearest repair capable facility.

4.5.1.2. Other Mission and Repair Clarifications:

4.5.1.2.1. Shall be repaired at next repair capable facility: Mission may continue as scheduled, item shall be repaired upon reaching a repair capable facility. Designate item ME upon reaching repair facility. Once maintenance action is initiated, and it is determined repairs are not possible, the PIC will discuss possible courses of action with C2 agency to return aircraft to service.

4.5.1.2.2. Mission dictates requirement: PIC shall consider the entire mission profile, not just the next leg. ***Example:*** An airplane is departing an enroute station with repair capability, after engine start the FE discovers the #1 engine anti-ice is inoperative. Icing conditions are not forecasted for the next leg. However, because the mission spans several days and repair capability does not exist at the scheduled enroute stops, the PIC elects to have the item repaired prior to departing.

4.6. C-130 MEL. This MEL lists the minimum equipment and systems to launch the aircraft under routine operations. The MEL does not include all equipment or systems essential to airworthiness. The MEL is not intended to promote continued operation of the aircraft for an indefinite period with systems/subsystems inoperative. Due to the various configurations of C-

130s, the number in the "Installed" column is a representation of the majority of the aircraft. If your series requirement is different than the number shown, there is no waiver requirement for the number installed.

Table 4.1. Engines/Auxiliary Power Unit (APU)/Gas turbine Compressor (GTC).

Item/System	Installed	Required		
		A	B	**Remarks/Limitations/Exceptions**
Engines	4	4	4	Do not take off with nonstandard aircraft configuration or power unless a hostile threat to the aircraft and/or crew makes it imperative. Do not take off unless all four engines will achieve takeoff power settings.
Torquemeter	4	4	4	
Tachometer	4	4	4	
Turbine Inlet Temperature Indicators	4	4	4	
Fuel Flow Gauges	4	4	4	
Oil Temperature Gauges	4	4	4	
Oil Pressure gauges	4	4	4	Indicators for both the engine power section and reduction gear section must be operational.
Oil Quantity Gauges	4	3*	3*	*One oil quantity gauge may be inoperative provided the oil quantity is verified prior to flight and the Low Oil Quantity light is operational.
Low Oil Quantity Light	1	1	0*	*If inoperative, all four oil quantity gauges must be operational.
Oil Cooler Flap	4	0*	0*	*Oil Cooler Flap may be inoperative if the Flap can be manually positioned to open and fixed and oil temperature can be maintained within normal limits.
Oil Cooler Flap Position Indicator	4	4	0*	*Oil Cooler Flap Position Indicator may be inoperative provided oil temperature can be maintained within normal operating limits.
APU	1	1	0*	*If the APU fails, flight in VMC is authorized provided no other electrical malfunctions exist. If the APU generator is inoperative, the generator will be removed and padded prior to operation of the APU.
GTC	1	1	0*	*Mission dictates requirement.

Table 4.2. Propellers.

Item/System	Installed	Required		
		A	B	**Remarks/Limitations/Exceptions**

Propeller	4	4	4	Propeller may be operated with a feather override failure where the override button fails to pop out at full feather (faulty pressure switch), provided maintenance instructions in the applicable fault isolation manual are followed and no other system is affected.
Synchrophaser	1	1	0*	*Shall be repaired at next repair capable facility, provided no other portion of the propeller system is affected. Synchophaser will be removed.

Table 4.3. Electrical System.

Item/System	Installed	Required		
		A	B	**Remarks/Limitations/Exceptions**
Generators, Engine-Driven	4	4	3*	*Shall be repaired at next repair capable facility. If the AC generator is not equipped with a generator disconnect, it will be removed and the generator mount padded before flight. Local training missions may continue after a generator is disconnected or removed and the mount padded, provided no other electrical malfunction exists.
Bus Switching Unit (BSU)	2	2	1*	*The #1 BSU must be operational.
Transformer Rectifiers (TR)	4	4	3*	*One Essential TR unit may be inoperative for one-time flight to a repair capable facility provided no other electrical malfunction exists.
LH DC Transformer Rectifier	1	0*	0*	*Theater specific SPINS dictate requirements.
ATM and ATM generator/APU Generator	1	1	0*	*If the ATM, ATM generator/APU generator fails, flight in VMC is authorized provided no other electrical malfunctions exist. APU generator will be removed and padded before operation of the APU.
Generator Out Lights	4	4	4*	*If a generator has been disconnected or removed and padded, its associated indicators do not have to be operational. All associated equipment and indicators will be operational for each operative engine-driven generator (i.e., generator control panel, GCU, voltage regulator, generator out/caution light, AC loadmeter, etc.).
AC Loadmeter	4	4	4*	*If a generator has been disconnected or removed and padded, its associated indicators do not have to be operational. All associated equipment and indicators will be operational for each operative engine-driven generator (i.e., generator control panel, GCU, voltage regulator, generator out/caution light, AC loadmeter, etc.).

Table 4.4. Anti-Ice/De-Ice System.

Item/System	Installed	Required		
		A	B	**Remarks/Limitations/Exceptions**

Ice Detection System	1	1	0*	*Mission dictates requirement. Will be operational for flight into known or forecast icing conditions.
Pitot-Heat System	2	2	2	
TAS Probe Heat	1	1	0*	*Mission dictates requirement. Will be operational for flight into known or forecast icing conditions.
Wing/Empennage Anti-Icing System	2	2	0*	*Mission dictates requirement. Will be operational for flight into known or forecast icing conditions.
Engine Inlet Air Duct Anti-Icing Systems	4	4	0*	*Mission dictates requirement. Will be operational for flight into known or forecast icing conditions.
Leading Edge Temperature Indicators	6	6	6	
Wing Leading Edge and Wheel Well Overtemperature Warning Lights	7	7	7	
Propeller Anti-Icing and Deicing Systems	4	4	0*	*Mission dictates requirement. Propeller Blade De-Icing will be operational for flight into known or forecast icing conditions.
Windshield Anti-Icing Systems	2	2	0*	*Mission dictates requirement. Will be operational for flight into known or forecast icing conditions.

Table 4.5. Air Conditioning, Pressurization and Bleed Air.

Item/System	Installed	Required		
		A	B	**Remarks/Limitations/Exceptions**
Flight Deck and Cargo Compartment Air Conditioning Units	2	2	0*	Pressurization and both air conditioning systems should be operational for special weapons missions. *Repair as soon as practical. Ensure that an acceptable pressure and temperature can be maintained with operable systems. Coordinate with the senior medical AECM when patients are carried. Passengers and patients will be briefed on the possibility that discomfort may be encountered. *Air conditioning and pressurization are not required for low-level missions if a reasonable temperature can be maintained.
Flight Deck Auxiliary Vent Valve	1	1	1	
Cargo Compartment Auxiliary Vent Valve	1	1	0	
Flight Deck/Cargo Compartment Temperature Control System	2	2*	2*	*Automatic or manual system may be inoperative if the other is operable.
Under Floor Heat System	1	1	0*	*Mission dictates requirement.
Cabin Pressure Controller	1	1*	1*	*Automatic controller may be inoperative for pressurized flight provided the manual controller is operative. May be inoperative for unpressurized flight.
Cabin Altimeter	1	1	1*	*May be inoperative for unpressurized flight.
Cabin Differential Pressure Indicator	1	1	1*	*May be inoperative for unpressurized flight.

Cabin Rate of Climb Indicator	1	1	1*	*May be inoperative for unpressurized flight.
Emergency De-Pressurization Switch	1	1	1	

Table 4.6. Doors and Ramp Systems.

Item/System	Installed	Required		
		A	B	**Remarks/Limitations/Exceptions**
Ramp Locking System	1	1	0*	Warning light, latching mechanisms, and locking system will be operative for pressurized flight. Aircraft will not be released for flight with a malfunctioning ramp lock system, with cargo on the ramp. Aircraft may continue to destination if ramp locks malfunction in-flight. Cargo ramp will not be operated in flight, with cargo on the ramp, with malfunctioning locks. Repair lock malfunction or remove cargo from ramp prior to continuing flight operations. Do not pressurize the airplane if the ramp locks fail to lock. *Mission may continue. Unpressurized flight, with no cargo on the ramp, may be performed with a cargo ramp lock malfunction when mission requirements dictate..
Aft Cargo Door Locking System	1	1	0*	*Mission may continue. Pressurized flight may be performed with a aft cargo door lock malfunction when mission requirements dictate.
Crew Entrance Door and Warning Light	1	1	1	

Table 4.7. Hydraulics.

Item/System	Installed	Required		
		A	B	**Remarks/Limitations/Exceptions**
Engine-driven Hydraulic Pumps	4	4	4	
Utility/Booster System Engine Pump Pressure Warning Lights	4	4	4	
Utility System Hydraulic Pressure Indicator	1	1	1	
Booster System Hydraulic Pressure	1	1	1	

Indicator				
Hydraulic Suction Boost Pumps	2	2	2	
Auxiliary Hydraulic Pump	1	1	1	
Auxiliary Hydraulic Pressure Indicator	1	1	1	Direct reading gauge in cargo compartment may be inoperative
Rudder Boost Pressure Indicators	2	2	1	

Table 4.8. Landing Gear.

Item/System	Installed	Required		
		A	B	**Remarks/Limitations/Exceptions**
Landing Gear System	1	1	1*	*Shall be repaired at next repair capable facility. In the event of an actual or suspected landing gear malfunction, the gear will not be moved from the down and locked position. If landing gear has been tied down IAW Flight Manual emergency procedures, no further flights are authorized until repair is made or inspected by authorized maintenance personnel. Flight (including enroute stops) with landing gear doors removed may be accomplished to a destination with repair capability.
Landing Gear Position Indicators	3	3	0*	*Shall be repaired at next repair capable facility. Gear will not be moved from the down and locked position.
Landing Gear Warning Light	1	1	0*	*Shall be repaired at next repair capable facility. Gear will not be moved from the down and locked position.

Table 4.9. Brake/Anti Skid Systems.

Item/System	Installed	Required		
		A	B	**Remarks/Limitations/Exceptions**
Wheel Brakes	4	4	4	
Parking Brake	1	1	1	
Anti-Skid	1	1	0*	*Shall be repaired at next repair capable facility. Maximum effort landings with antiskid inoperative are not authorized. A local training flight may continue if the antiskid fails provided the system is turned off. Multiple landings or formation landings will not be accomplished.

Table 4.10. Fuel System.

Item/System	Installed	Required		
		A	B	**Remarks/Limitations/Exceptions**
Main Tank Fuel Pumps	4	4	4*	*On aircraft with dump mast shutoff valve switches, one main tank fuel boost pump may be inoperative for one-time flight to a repair capable facility, provided the respective fuel dump pump is operational.
Main Tank Dump Pumps	4	4	4	
Auxiliary Tank Fuel Pumps (per tank)	1	1	0*	*Mission dictates requirement. Auxiliary tank fuel pumps will be operational for any tank containing fuel.
External Tank Fuel Pumps (per tank)	2	2	0*	*Mission dictates requirement. 1 pump will be operational for any tank containing fuel.
Main Fuel Quantity Indicators (See NOTE 1)	4	4	3*/ 2**	*One main fuel tank indicator may be inoperative provided: Both the tank with the inoperative indicator and its symmetrical tank quantity are verified by use of a fuel tank dip stick. Reference Fuel Quantity Conversion Data chart in 1C-130H-2-12JG-10-1 for applicable fuel type with foam. At enroute stops when engines are shut down, the tank with the inoperative indicator and the symmetrically opposite tank will be dip checked. Crossfeed operation will begin when the symmetrically opposite quantity indicator has decreased to 1,500 lbs (inboards) and 2,500 lbs (outboards). Engine out training using the engine corresponding to the inoperative indicator or its symmetrical opposite will not be conducted during tank to engine operation. Flights consisting of multiple stops when the mission profile does not allow dipping of tanks (i.e., EROs, local trainers) will terminate with a minimum of 8,000 lbs calculated main tank fuel. **Local training flights may be conducted with two inoperative main tank indicators provided: Inoperative indicators are asymmetrical. Main tanks fuel quantity is visually verified using the fuel tank dip stick. Reference Fuel Quantity Conversion Data chart in 1C-130H-2-12JG-10-1 for applicable fuel type with foam.

				Engine out training is not performed unless all engines are on crossfeed from auxiliary or external tanks with operative indicators. Mission will terminate with a minimum of 8,000 lbs calculated main tank fuel.
External Fuel quantity Indicator (See NOTE 1)	2	0*	0*	*One external fuel tank indicator may be inoperative provided both external fuel tanks are checked full or empty. Both external fuel tank indicators may be inoperative provided both external tanks are verified empty. When an external tank indicator is inoperative and the tank cannot be visually checked empty due to foam modification, comply with the following prior to flight: Check pressure with each pump in the external tank. If no pressure is obtained, the tank is verified empty. If pressure is obtained, ground transfer the fuel from the external tank. Defuel the external tank if unable to ground transfer. When unable to verify an external tank is empty prior to engine start, the tank will be placed on crossfeed until no pressure is obtained. This will be completed prior to takeoff. **EXCEPTION:** LC-130s conducting Antarctic Operations may operate with partial fuel loads in the external fuel tanks with one external fuel quantity indicator inop provided both tanks are dipped and all main tank fuel quantity indicators are operational.
Auxiliary Tank Fuel Quantity Indicators	2	0*	0*	*If fuel quantity indicator is inoperative, fuel quantity will be verified with the magnetic sight gauge.
NOTE 1: Both a main and external fuel tank indicator may be inoperative on the same wing provided the limitations listed for a single inoperative main fuel tank indicator and a single external fuel tank indicator are followed.				

Table 4.11. Flight Recorder/Locating Systems.

Item/System	Installed	Required		
		A	B	**Remarks/Limitations/Exceptions**
Flight Data Recorder (FDR)	1	1	0*	*If the FDR is inop but the CVR is operational, flight is authorized to next repair capable base.
Cockpit Voice Recorder (CVR)	1	1	0*	*If the CVR is inop but the FDR is operational, flight is authorized to next repair capable base.
Emergency Locator Transmitter	1	1	0*	*Shall be repaired at the next repair capable facility.

Underwater Acoustical Locator Beacon (UAB)	1	1	1	

Table 4.12. Fire Protection/Warning Systems.

Item/System	Installed	Required		
		A	B	**Remarks/Limitations/Exceptions**
Fire Extinguisher System	2	2	2	
Engine Fire and Turbine Overheat Warning Systems	4	4	4	
Nacelle Overheat Warning System	4	4	4	
GTC/APU Fire Warning System	1	1	1	

Table 4.13. Flight Instruments.

Item/System	Installed	Required		
		A	B	**Remarks/Limitations/Exceptions**
Airspeed Indicator	2	2	2	
Vertical Velocity Indicator or Vertical Velocity Speed Indicator	2	2	1*	*NVG airland missions and flights in RVSM airspace require 2.
Flight Director Systems	2	2	2	
Attitude Director Indicator (ADI)	2	2	2*	*One turn needle may be inoperative provided no other malfunctions exist on either ADI. (On airplanes prior to AF78-0806, modified by TO 1C-130-1391 and TO 1C-130-1333.)
Standby ADI (if installed)	1	1	1	
Horizontal Situation Indicators (HSI)	2	2	2	
EFI Displays (if installed)	4	4	3*	*Inoperative EFI must be in the copilot HSI position.
BDHI	4	3	0	
Barometric Altimeters	3	3	2*	*Both pilots' altimeters must be operational.
CARA (pilot's indicator)	1	1	0*	*Mission dictates requirement. Required for NVG operations.
Ground Proximity Warning System (GPWS) (if equipped)	1	1	0*	*Shall be repaired at the next repair capable facility.

Ground Collision Avoidance System (GCAS) (if equipped)	1	1	0*	*Shall be repaired at the next repair capable facility.
Traffic Collision and Avoidance System (TCAS) (if equipped)	1	1	0*	*Shall be repaired at the next repair capable facility.
Digital/Central Air Data Computer (if installed)	1	1	1	
#1 UHF Manual Control Head Radio (SCNS only)	1	1	1	
HF Radio	2	0*	0*	* Mission dictates requirement.

Table 4.14. Navigation Systems.

Item/System	Installed	Required		
		A	B	**Remarks/Limitations/Exceptions**
Standby Magnetic Compass	1	1	1	
Heading Systems	2	2	1*	*See **paragraph 4.8.**
VOR/ILS	2	2	1	
ADF	2	0*	0*	*Mission dictates requirement.
TACAN	2	2	1	
Radar	1	1	0*	*Mission dictates requirement. Will be operational if thunderstorms or hazardous conditions that can be detected by airborne radar are forecast or exist along route of flight. Radar not required for formation flight as long as another formation member has an operable radar.
241 Radar	1	1	0*	*Mission dictates requirement. Required for flight if known or forecast thunderstorms are expected along the route of flight. Radar not required for formation flight as long as another formation member has an operable radar. *When no navigator is on board, the pilot's display/sweep is required for flight if known or forecast thunderstorms are expected along the route of flight.

IFF/SIF	1	1	1	Aircraft will not depart with an IFF known to be inoperative. If self test fails, you may take off if the IFF was operational on the previous mission. ***EXCEPTIONS:*** Formations must have at least one operational IFF per element.

Table 4.15. Aircraft Exterior/Interior Lighting.

Item/System	Installed	Required		
		A	B	**Remarks/Limitations/Exceptions**
Landing Lights	2	2	1*	*One may be inoperative provided the wheelwell taxi light on same side is operational.
Wheelwell Taxi Lights	2	2	1*	*One may be inoperative provided the landing light on the same side is operational.
Wingtip Taxi Lights	2	2	0	
Formation Lights	9	0*	0*	Mission dictates requirement. Two lights per wing will be operational for night formation flights.
Navigation Lights	6	6	3*	*For night operations, the left and right wingtip Navigation lights must be operational in addition to one of the white lights on the tail cone.
Anti-Collision/Strobe Lights	2	2	1*	*Shall be repaired at next repair capable facility.
Wing Leading Edge Lights	2	2	0	
Primary Instrument Cockpit Lighting	1	1	0*	*Mission dictates requirement. All edge "peanut" lighting or backlit lighting (depending on aircraft model) will be operational for night operations for the following instruments: airspeed, altimeters, VVI/VSI, ADI, and HSI.

4.7. Supplements. Each MAJCOM may supplement the MEL (see **Chapter 1**).

4.8. Navigation Systems.

4.8.1. For flights in Minimum Navigation Performance Specification (MNPS) airspace in the North Atlantic Region or the routes connecting Composite Hawaii to Mainland US Route System, the following fully operable navigation systems are considered the minimum necessary to permit compliance.

4.8.1.1. SCNS aircraft. Fully operational SCNS, to include the navigator's IDCU and either the pilot or copilot's IDCU.

4.8.1.2. Compass systems. When two systems are installed, both should be operational. If one system fails, refer to the flight manual to determine what other equipment is affected.

4.8.2. For flights on all other Category I routes, the PIC determines the minimum navigational capability required to safely accomplish the mission. Consider the following: length and route of flight, weather, and experience and proficiency of the crew.

4.8.3. Equipment listed in DOD FLIP AP/2, *Area Planning Europe-Africa-Middle East* for permitting compliance with MNPS is mandatory. Loss of any component before track entry requires return to a station with maintenance capability or re-filing via specified routes.

4.9. Gear Down Flight Operations. Limit gear down flight operations to sorties required to move the aircraft to a suitable repair facility. Consider gear down flight only after the PIC exhausts all avenues to repair the aircraft in place.

4.9.1. Standard climb-out flight path charts in TO 1C-130xx-1-1, *C-130 Performance Manual*, assume gear retraction intiated three seconds after takeoff. For gear down operations, drag index must be applied using the Effect of Variant Configurations On Climbout Flight Path charts. PICs shall not takeoff until there is reasonable assurance that they will achieve/maintain adequate obstacle clearance to include enroute stops and alternates.

4.9.2. Time and communications capability permitting, validate takeoff data with MAJCOM STAN/EVAL or OG/OGV.

4.10. Minimum Equipment for NVG Operations. The following equipment is required for NVG operations (in addition to the equipment listed above):

4.10.1. Pilot's Radar Altimeter.

4.10.2. SCNS with a minimum of one GPS or INS must be operational for low-level flights flown using NVG enroute altitudes.

4.10.2.1. If no GPS or INS is operational, climb to MSA. EXCEPTION: Wingmen may fly in-trail at NVG en-route altitudes as long as a GPS or INS is operational in the lead aircraft.

4.11. (Added-911AW) Over-Torque of T-56-15 Engines. In the event an over-torque is experienced, comply with the following guidelines extracted from T.O. 1C-130A-6, *Aircraft Schedule Inspection and Maintenance Requirement*.

4.11.1. **(Added-911AW)** 19,600 to 21,500 in-lbs. Record over-torque on AFTO Form 781A, *Maintenance Discrepancy and Work Document*. (No inspection required).

4.11.2. **(Added-911AW)** 21,500 to 23,000 in-lbs. Record over-torque on AFTO Form 781A. When over-torque is due to throttle movement alone and no other engine malfunction is suspected, local flights or off-station missions may continue until aircraft is normally returned to maintenance. Note: DO NOT EXCEED 25 FLIGHT HOURS after the over-torque prior to an inspection by qualified maintenance personnel.

4.11.3. **(Added-911AW)** Greater than 23,000 in-lbs. Record the over-torque on the AFTO Form 781A. Local or off-station missions, at the discretion of the aircraft commander and home station maintenance supervisor, may continue with the scheduled sortie. Upon mission

termination the aircraft will not be flown again until required inspections are completed. Note: DO NOT EXCEED 25 FLIGHT HOURS after the over-torque prior to an inspection by qualified maintenance personnel.

Chapter 5

OPERATIONAL PROCEDURES

5.1. Checklists. A checklist is not complete until all items have been accomplished. Momentary hesitations for coordination items, ATC interruptions and deviations specified in the flight manual, etc., are authorized. Notes amplifying checklist procedures or limitations may be added to the checklists (in pencil). Currency of notes is a crewmember's responsibility.

5.1.1. Checklist Inserts. MAJCOM/A3V and the AFMC Flight Manual Manager are the checklist insert approval authorities. Send checklist inserts to MAJCOM/A3V, who will in turn coordinate with AFMC for approval. All checklist inserts must have a POC. OGVs shall approve local in-flight guides and inserts not affecting T.O. guidance and procedures.

5.1.2. Abbreviated checklists items that do not apply to the unit's aircraft or mission may be lined out in pencil.

5.2. Duty Station. Both pilots and the flight engineer shall be in their seats during flight. One of the pilots may be out of their seat for brief periods to meet physiological needs. With both pilots in their seats, PICs may authorize rest periods for one pilot occupying a primary duty station during non-critical phases of flight (the other pilot will be awake and alert). Only one pilot, or the flight engineer, may be absent from their duty station at a time. Notify the PIC prior to departing assigned primary duty station.

5.3. Flight Station Entry. PICs may authorize passengers and observers access to the flight station during all phases of flight; the total number of persons permitted is limited to the number of seats with operable seat belts and oxygen. Passengers and observers will not be permitted access to primary crew positions.

5.4. Takeoff and Landing Policy. An aircraft commander, or above, will occupy either the left or the right seat during all takeoffs and landings. The designated PIC (A-code) is not required to occupy a primary position, but still retains overall authority for conduct of the mission.

5.4.1. An AC or IP will make all takeoffs and landings during:

5.4.1.1. Aircraft emergencies, unless conditions prevent compliance. ***EXCEPTION:*** Mobility Pilot Development (MPD) trained pilots may perform takeoffs and landings during aircraft emergencies.

5.4.1.2. Airlift of nuclear weapons.

5.4.1.3. Max effort operations or landings with unimproved airfield operations. Only IPs or ACs under the direct supervision of an instructor pilot may conduct maximum effort or substandard airfield operations from the right seat.

5.4.1.4. Situations when in the opinion of the PIC, marginal conditions exist.

5.4.2. Unless the pilot in the other seat is a certified AC or higher, Pilots In Command (PIC) with less than 100 hours Primary Assigned Hours (PAH) hours since AC certification will make all takeoffs and landings under any of the following conditions:

5.4.2.1. Ceiling/visibility less than 300 feet and/or RVR 4000 (3/4 SM visibility).

5.4.2.2. RCR less than 12.

5.4.2.3. Crosswind component greater than 15 knots.

5.4.3. Copilot/MPD Takeoff/Landing Policy:

5.4.3.1. INSTM/QUAL. MPD trained pilots may takeoff or land from either seat if an AC occupies the other seat. Copilots identified for AC upgrade may takeoff and land from the left seat only if an IP provides direct supervision from the right seat.

5.4.3.2. MSN. Copilots/MPDs will not takeoff or land from the right seat when in formation. Copilots/MPDs in Mission Upgrade may occupy the left seat on formation departures/ recoveries, assaults, or substandard airfield operations with an IP in the right seat.

5.4.4. **(Added-911AW) MPD PILOT SEAT POSITIONING FOR PHASES I, II, and III**. MPD Pilots are responsible for ensuring they adhere to **Table 5.1** through **Table 5.3**. regarding seat position for the listed events.

5.5. Landing Gear and Flap Operating Policy. The pilot flying (PF) the aircraft will command configuration changes. The pilot monitoring (PM) the aircraft will verify appropriate limitations and acknowledge the command by repeating it. The landing gear will be operated by the pilot in the right seat. The flaps will be operated by the PM.

5.6. Outside Observer Duties. Available crewmembers will assist in clearing during taxi operations, and any time the aircraft is below 10,000 feet MSL.

5.7. Seat Belts.

5.7.1. All occupants will have a designated seat with a seat belt. Crewmembers will have seat belts fastened when occupying a duty position, unless crew duties dictate otherwise. Loadmasters (or other crewmembers) required to be in the paratroop door at the scanning position will have a designated seat (other than the scanning seat) with a seat belt.

5.7.2. All crewmembers will have seat belts fastened during takeoff and landing unless crew duties dictate otherwise. Fasten shoulder harness unless crew duties dictate otherwise. Crewmembers performing instructor or flight examiner duties or are in upgrade training to instructor or flight examiner are exempt from seat belt requirements if not occupying a primary crew position; however, they will have a seat available with an operable seat belt.

5.7.3. Litter patients, actual or simulated, may remain secured on litters for takeoff and landing.

5.7.4. Loadmasters (or other crewmembers) required to be positioned in paratroop door for take-off/landing/threat scanning will be restrained in a restraint harness as follows:

5.7.4.1. Helmets will be worn and paratroop door armor will be installed. ***EXCEPTION***: Paratroop door armor is not required on training missions.

5.7.4.2. Route the restraint harness straps (NSN 1680-01-314-3184) depicted in TO 13A1-1-1, *Repair, Cleaning, Inspection, and Testing of Aircraft Safety Belts, Shoulder Harness, and Miscellaneous Personnel Restraint Equipment* through the support braces forward and aft of the paratroop doors with a girth hitch and attach to the restraint harness riser quick disconnect fittings. Ensure the leg and chest straps are connected and attach the restraint harness lifeline to a floor/dual rail tie-down ring.

5.7.4.3. When restraint harness straps are not available, 5000 lb tie-down straps may be used to secure the restraint harness. Route a tie-down strap around each of the support braces forward and aft of the paratroop doors and attach the hook to the restraint harness riser clip. If the restraint harness does not have the riser clips, route the hook end of the tie-down strap through each side of the harness in the area the riser clips should be positioned and attach the hook back into the strap.

5.7.4.4. Attach the restraint harness lifeline to a dual rail tie-down ring directly under the paratroop door and adjust to limit vertical movement.

5.7.4.5. The use of paratroop door seats on newer C-130 aircraft, locally manufactured seats or other commercially manufactured seats obtained for loadmaster comfort while performing threat scanning, including takeoffs and landings, are only authorized in conjunction with the restraint harness method outlined above.

5.8. Aircraft Lighting. IAW AFI 11-202V3, AFI 11-218, *Aircraft Operations Movement on the Ground,* and applicable T.O.s.

5.8.1. NVG Lighting. During combat/contingency operations, the tactical situation may dictate the use of all, some, or none of the aircraft exterior lights as determined by the mission commander. Landing lights will be extended and ready for use prior to all landings. The tactical situation will dictate if the landing lights will be used during landing. Lights-out operations during peacetime will be conducted IAW AFI 11-202V3. Follow the exterior lighting guide in AFTTP 3-3.C-130E/H, *Combat Aircraft Fundamentals—C-130E/H,* for all NVG training situations.

5.8.1.1. Total lights-out operations are authorized with concurrence of the controlling agency in restricted airspace and warning areas.

5.8.2. Cargo compartment lighting will be dictated by the situation and will be coordinated between the mission commander/PIC and loadmaster(s). During cargo compartment emergencies the loadmaster should discontinue NVG use and select full bright on the cargo compartment lights (situation permitting).

5.8.3. Interior lighting will be set-up using NVIS compatible lighting for all NVG airland operations (C-130E/H and H-2 harness filter kit or Glendale Filter system (GFS) are also acceptable). Taping with NVG compatible chemical lights is not an acceptable lighting scheme for NVG airland operations. ***WARNING:*** NVGs adjust to the brightest source of light; for that reason, poor cockpit lighting discipline may prevent a successful transition to landing during IMC. Therefore, do not perform an instrument approach in IMC to an NVG landing without NVIS compatible flight deck lighting.

5.8.4. Aircraft Preparation. For NVG enroute and airdrop operations, aircrews are allowed to tape incompatible lighting and use NVG compatible chemical glow sticks. Some techniques for taping are outlined in AFTTP 3-3.C-130E/H. NVIS compatible lighting (including lighting harness) is required for all NVG airland operations.

5.8.4.1. Loadmaster Aircraft Preparation. Taping of lights may be accomplished; however, no more than one layer of tape will be used.

5.9. Portable Electronic Devices. IAW AFI 11-202V3.

5.9.1. Do not connect unauthorized equipment (laptop computers, video equipment, food preparation equipment, radios/tape players, CD players, etc.) to the aircraft intercom, PA, radio systems, or electrical system.

5.9.2. Aircrew members shall not use uncertified Government Furnished Equipment (GFE) or personal devices with RF transmit/receive capability on AMC aircraft carrying hazard class 1 explosive cargo at anytime. Prohibited devices include cellular phones, and laptop computers/PDAs with wireless capability enabled (i.e. Bluetooth). Loadmasters will ensure passengers comply with this restriction. Aircrew members may use certified GFE such as PFPS laptops and PDAs with infrared transmitters.

5.9.3. Authorized electronic equipment, to include hand-held GPS, is listed on the Electromagnetic Environmental Effects (E3) website at: **https://www.my.af.mil/afknprod/community/views/home.aspx?Filter=OO-EN-AS-14**

5.10. Tobacco Use on Air Force Aircraft. Tobacco use of any type is prohibited on Air Force aircraft.

5.11. Advisory Calls. The PF will announce intentions for departures, arrivals, approaches, and when circumstances require deviating from normal procedures. The PM will make all advisory calls except those designated for other crewmembers.

5.11.1. Takeoff. State "GO" at refusal speed or takeoff speed, whichever is lower. Any crewmember noting a safety of flight malfunction before hearing "GO" will state "REJECT" and a brief description of the malfunction (e.g., "Reject, number two engine flameout.").

5.11.2. Deviations:

5.11.2.1. The PM will inform the PF when heading or airspeed deviations are observed, or when the altitude is more than 100 feet from the desired, and no attempt is being made to correct the deviation.

5.11.2.2. Any crewmember seeing a deviation of 200 feet altitude or 10 knots in airspeed, or a potential terrain or obstruction problem, will immediately notify the PF. Deviations from prescribed procedures for the approach being flown will also be announced.

5.11.3. Advisory calls: Refer to **Table 5.1** through **Table 5.4** for a listing of mandatory advisory calls, responses, and aircrew actions.

Table 5.1. Climb Out.

Climb Out	PM/NAV Call	PF Response
Transition Altitude	"Transition Altitude, 29.92, Set"	"Transition Altitude, 29.92, Set"
1000' below assigned altitude	"(Altitude Passing) for (Altitude Assigned)"	"(Altitude Passing) for (Altitude Assigned)"

Table 5.1. (911AW) MPD Phase I (FPC).

EVENT	LEFT SEAT	RIGHT SEAT

Proficiency/Basic Events (including normal NVG takeoffs and landings	PF* / PM*	PF ** / PM
Mission Events (other than assault events)	NOT AUTHORIZED	PF / PM
Assault Events	NOT AUTHORIZED	PM only
Notes: 1. PF – (Pilot Flying) PM – (Pilot Monitoring) 2. * Instructor required in the right seat 3. ** No-Flap landing and 3-engine procedures not authorized as PF in right seat		

Table 5.2. Descent.

Descent	PM/NAV Call	PF Response
Transition Level	"Transition Level, (local altimeter), Set"	"Transition Level, (local altimeter), Set"
1000' above assigned altitude	"(Altitude Passing) for (Altitude Assigned)"	"(Altitude Passing) for (Altitude Assigned)"

Table 5.2. (911AW) MPD Phase II (FPQ).

EVENT	LEFT SEAT	RIGHT SEAT
Proficiency/Basic Events (including normal NVG takeoffs and landings	PF / PM	PF ** / PM
Mission Events (other than assault events)	PF / PM with CC approval*	PF / PM
Assault Events	PF / PM with CC approval*	PM only
Notes: 1. PF – (Pilot Flying) PM – (Pilot Monitoring) 2. * Instructor required in the right seat 3. ** No-Flap landing and 3-engine procedures not authorized as PF in right seat		

Table 5.3. Non-Precision Approaches.

Non-precision Approaches (4)	PM Call	PF Response
100' above Final Approach Fix	"100 above"	

(FAF) Altitude		
100’ above step down altitude	“100 above”	
100’ above Minimum Descent Altitude (MDA)	“Approaching Minimums”	Acknowledge
At MDA	“Minimums”	
Runway environment in sight and will remain in sight	“Runway in Sight”	“Landing” or “Going Around”
Missed Approach Point (MAP)	“Missed Approach Point” (3)	“Landing” or “Going Around”

Table 5.3. (911AW) MPD Phase III (FPQ) & AC COURSE GRADUATES (FPL).

EVENT	LEFT SEAT	RIGHT SEAT
Proficiency/Basic Events (including normal NVG takeoffs and landings	PF / PM	PF ** / PM
Mission Events (other than assault events)	PF / PM	PF / PM
Assault Events	PF* / PM*	PM only
Notes: 1. PF – (Pilot Flying) PM – (Pilot Monitoring) 2. * Instructor required in the right seat 3. ** No-Flap landing and 3-engine procedures not authorized as PF in right seat		

Table 5.4. Precision Approaches.

Precision Approaches (4)	PM CALL	PF RESPONSE
100’ above glide slope intercept altitude	“100 above”	
100’ above Decision Height (DH)/ Decision Altitude (DA)	“Approaching Minimums”	Acknowledge
At DH/DA	“Minimums”	(2)
Only Approach Lights in sight (CAT I ILS)	“Approach lights in sight”	“Continuing” (1)
Runway environment in sight and will remain in sight	“Runway in Sight”	“Landing” or “Going Around”
Approach Lights and/or Runway	“Go-around”	“Going Around”

environment not in sight		
At 100’ Above TDZE (CAT I ILS)	“100 Feet” (3)	“Landing” or “Going Around”

NOTES:

(1) With weather at CAT I minimums on a CAT I ILS, the pilot may not see the runway environment at DA; however, the initial portion of the approach lights may be visible. The pilot may continue to 100 HATh with reference to the approach lights only. The pilot may not descend below 100 feet above touchdown zone elevation using the approach lights as reference unless the red terminating bars or the red side row bars are distinctly visible and identifiable.

(2) The PF will announce his/her intentions to either land, continue (CAT I), or go-around. Respond with the intention to land if runway environment is in sight, will remain in sight throughout touchdown and the aircraft is in a position for a safe landing.

(3) If the pilot flying has stated “landing” then this call is not required.

(4) Refer to stabilized approach criteria in **paragraph 5.12.**

5.12. Stabilized Approach. Unstable approaches are primary contributors to numerous military and civilian mishaps. Stabilized approaches are essential for the safe operation of aircraft and are mandatory. The following criteria define specific parameters that mitigate risk during this critical phase of flight. This philosophy requires aircrew to take immediate corrective actions to stabilize the approach when outside designated parameters and culminates in a decision point for the approach. The stabilization point for precision approaches is at 1000 feet above Threshold Elevation (THRE). For all other approaches (except tactical approaches), the stabilization point is at 300 feet above THRE unless otherwise briefed by the PF. Tactical approaches will be executed as briefed by the PF.

5.12.1. The following criteria apply to all approaches:

5.12.1.1. Airspeed is appropriate for the configuration and conditions.

5.12.1.2. Sink rate is no greater than 1000fpm. **Note**: Under certain conditions (WX, Threats, Terrain, etc.) some IAPs and Tactical Approaches may require greater than a 1000 FPM descent rate. This increased sink rate will be briefed.

5.12.1.3. All briefings are complete prior to beginning the approach. All checklists are complete and the aircraft is in landing configuration prior to the stabilization point for the approach unless contrary to T.O. guidance (i.e., during engine-out operations when landing is not assured).

5.12.1.4. Aircraft is on the correct track.

5.12.1.5. Aircraft in the correct bank angle to maintain proper approach track for instrument, circling, or visual/tactical approach.

5.12.1.6. Power set to maintain the descent profile at approach speed.

5.12.1.7. From the beginning of the approach until the stabilization point, anytime the aircraft is outside these parameters the PM will announce the deviation and the PF will take immediate corrective action.

5.12.1.8. At the briefed stabilization point, the PM will state the altitude (AGL) and announce "stable" or "go-around". Example: for a precision approach, PM states "1000, stable".

5.12.1.9. Momentary minor corrections or deviations are acceptable and defined as:

5.12.1.9.1. Airspeed: +10/-5 kts from target

5.12.1.9.2. Bank Angle: +/- 15 degrees from target

5.12.1.9.3. Rate of Descent: +/- 300 FPM from target

5.12.2. For non-precision approaches, pilots should calculate a constant descent gradient profile from the FAF altitude to the VDP (IAW AFMAN 11-217V3, *Supplemental Flight Information*). This is considered the safest profile and should be used to the max extent possible. During a go-around, ensure descent below the MDA does not occur. If a VDP is not depicted on the IAP, do not calculate your own VDP without fully complying with the cautions stated in AFMAN 11-217V3.

5.12.3. Descent Planning and Energy Management. Aircrews will ensure the aircraft is following the planned descent profile. All non-tactical descents should follow a normal descent profile IAW AFMAN 11-217 procedures and techniques in the absence of ATC or FLIP guidance. All tactical descents should follow published tactical procedures/profiles. When unforeseen interruptions alter the planned descent, immediately correct any deviations. It may be necessary to hold, request vectors, or take alternate actions in order to comply with the planned descent profile.

5.12.4. Visual Transition. It is imperative for aircrews to review the airfield environment. Identify key features such as approach light type, airfield lighting, geographic layout/configuration of runways, taxiways, ramps, etc. To the max extent possible, this study will take place during the crew mission briefing and reviewed again prior to descent.

5.12.5. Missed Approach/Go-Around. Aircrews will conduct a thorough briefing for anticipated missed approach/go-around scenarios. This briefing will include a discussion of specific crewmember duties.

5.12.6. For FTUs only. FTUs will fully emphasize and train so as to ensure the final product complies with all aspects of stabilized approach criterion. However, the building block approach used to properly execute both tactical and non-tactical approach/landings for initial/upgrade training requires that instructors have the latitude to use their expertise and experience to deviate from stabilized approaches guidance. FTU instructors are expected to use good judgment, technique and latitude while developing student skills and therefore are relieved of strict compliance to the stabilized approach criterion during appropriate instructional scenarios.

5.13. Communications Policy. There is no confidentiality regarding recorded aircraft crew communications. Crewmembers are expected to maintain a high degree of cockpit professionalism and crew coordination at all times.

5.13.1. Aircraft Interphone. Primary crewmembers will monitor interphone during critical phases of flight. Crewmembers will advise the PF before checking off interphone. Crewmembers will ensure personnel on headset, or within listening distance are cleared prior to discussing classified information over interphone.

5.13.2. Command Radios:

5.13.2.1. The PM normally makes all ATC radio calls.

5.13.2.2. In terminal areas, all crewmembers (if able) will monitor the command radio unless directed otherwise. A crewmember will be designated to monitor C2 frequencies on the inbound and outbound legs.

5.13.2.3. The pilot operating the radios will notify the crew which radio is primary, and update the crew when the primary radio changes.

5.13.2.4. One pilot should record and read back all ATC clearances; The navigator or communications systems operator (if applicable) will record the clearance instructions, monitor the read back, and ensure compliance with all instructions.

5.13.2.5. Both pilots will monitor UHF and VHF guard emergency frequencies to the maximum extent possible. To monitor VHF guard, 121.5 must be tuned.

5.13.2.6. The Federal Communications Commission (FCC) prohibits the use of unauthorized frequencies for interplane, HAVE QUICK, or SECURE VOICE training.

5.14. Crew Resource Management (CRM)/Threat and Error Management.

5.14.1. Threat and Error Management provides strategies and tactics to help crews target threats to safe flight operations and decreases the potential for crew error. External threats are events that occur outside the influence of the flight crew and require crew attention and management to maintain adequate safety margins. Internal threats are crew related and are factors that could lead to an error if not recognized and controlled.

5.14.2. "Time Out" is the common assertive statement for use by all crewmembers. The use of **"Time Out"** will:

5.14.2.1. Provide a clear warning sign of a deviation or loss of situational awareness.

5.14.2.2. Provide an opportunity to break the error chain before a mishap occurs.

5.14.2.3. Notify all crewmembers when someone sees the aircraft or crew departing from established guidelines, the briefed scenario, or that someone is simply uncomfortable with the developing conditions.

5.14.2.4. As soon as possible after a **"Time Out"** has been called, the aircrew will take the following actions:

5.14.2.5. Safety permitting, stabilize the aircraft and ensure terrain clearance.

5.14.2.6. The initiating crewmember will voice their concerns to the crew.

5.14.2.7. The PIC will provide all other crewmembers with the opportunity to voice inputs relative to the stated concerns.

5.14.2.8. After considering all inputs, the PIC will direct the aircrew to continue the current course of action or direct a new course of action.

5.14.3. Sterile Cockpit. With the exception of cruise flight, conversation below 18,000' MSL will be limited to mission, departure, or approach essential items. Every effort will be made to accomplish briefings and appropriate checklists prior to top of descent (TOD). Sterile cockpit procedures also apply during taxi, low level, and air refueling operations.

5.14.4. Heads-up/Heads-down. Any crewmember that observes both pilots heads-down at the same time (other than heads-down instrument flying) shall alert the PF without delay.

5.14.5. CRM Enhancement. PICs should conduct a CRM exercise on the first suitable segment of each mission. This will be done at level off on a non-interference basis with other mission requirements. Take the exercise to a logical conclusion and ensure crew communications and duties are appropriate. Suggested topics are rapid decompression, oceanic contingency operation, emergency divert or other MAJCOM or locally generated Special Interest Item (SII).

5.14.6. Critical Action Coordination. Those actions that are flight critical/irreversible in nature and will be confirmed by two crew members. These actions include, but are not limited to, pulling the engine fire handle, moving a propeller condition lever to feather, and discharging agent. The crew member performing the action points to the affected switch/handle and verbally seeks confirmation from a second crew member (i.e."CONFIRM NUMBER ONE"). The crew member confirming the action looks at the affected switch/handle and acknowledges (i.e."NUMBER ONE CONFIRMED").

5.15. Use of Automation.

5.15.1. General Automation Procedures. There must be a clear understanding of the PF, the PM, and navigator duties at all times. Aircrews should use aircraft automation consistent with changing flight environments and aircraft capabilities. If the use of automation creates a loss of situational awareness or results in task saturation, shift to a less demanding level or disconnect the automation entirely and re-establish desired aircraft path and control. Both pilots are responsible for ensuring the aircraft is following the desired flight path.

5.15.2. Verbalize, Verify, and Monitor (VVM) is a closed-loop system of communication designed to significantly reduce typical automation selection errors between the PF, PM and the navigator. VVM consists of the following three step process:

5.15.2.1. When making any changes in the AFCS, SCNS flight plan, and altitude alerter, the pilot/navigator making the entries will VERBALIZE the intended change.

5.15.2.1.1. The PF will announce changes to the level of automation, flight director and autopilot mode selections, and mode transitions to the maximum extent possible (e.g. "Autopilot engaged ","Altitude Hold", "Nav-Capture", etc.). The PM will acknowledge the call.

5.15.2.2. The other pilot or nav will VERIFY the change.

5.15.2.3. All pilots and the nav will MONITOR the aircraft to ensure the expected performance is achieved.

5.16. Transportation of Pets. Transporting pets (dogs and cats) in conjunction with the sponsor's permanent change of station is authorized where there is no commercial service. Other pets or animals are normally prohibited, but may be moved according to DOD 4515.13R.

5.17. Alcoholic Beverages. The MAJCOM/A3/DO or NAF/CC may authorize the dispensing of alcoholic beverages.

5.18. Runway, Taxiway, and Airfield Requirements.

5.18.1. Minimum Runway and Taxiway Requirements. For peace-time do not use runways less than 3,000 feet. Minimum runway width is 80 feet (60 feet for max effort). Minimum taxiway width is 30 feet. The MAJCOM/A3/DO may waive runway/taxiway width requirements.

5.18.2. Runway Length for Takeoff and Landing. Minimum runway length for normal takeoff is Critical Field Length or Minimum Field Length for Maximum Effort Take-Off for max effort operations. Minimum runway for normal landing is Landing Distance or Ground Roll plus 500 feet for max efforts. For peacetime, compute landing performance with two engines in reverse and two engines in ground idle.

5.18.2.1. Runway Length for Takeoff and Intersection Takeoffs. Normally, the PF will initiate takeoffs from the beginning of the approved usable portion of the runway. The decision to make intersection takeoffs rests solely with the PIC.

5.18.2.2. Pilots may accomplish intersection takeoffs provided the operating environment (i.e., gross weight, obstructions, climb criteria, weather, etc.) allows a safe takeoff and departure. Calculate takeoff performance based on the runway remaining from the point at which the takeoff is initiated.

5.18.2.3. During operations on runways partially covered with snow or ice, base takeoff computations on the reported runway surface condition (RSC) or runway condition reading (RCR) for the cleared portion of the runway. A minimum of 40 feet either side of centerline should be cleared (30 feet for maximum effort operations). If 40 feet either side of centerline is not cleared (30 feet for max effort ops), compute takeoff data based on the uncleared portion.

5.18.2.4. Use of Overruns. If approach end overruns are available and stressed or authorized for normal operations, they may be used to increase the runway available for takeoff. Departure end overruns (if stressed and authorized) may also be used for landing if needed.

5.18.3. Arresting Cables.

5.18.3.1. Do not land on (touchdown on) approach end arresting cables (does not include recessed cables). If the aircraft lands before the cable, the crew will contact the tower to have the cable inspected.

5.18.3.2. Do not takeoff or land over an approach end cable that has been reported as slack, loose, or improperly rigged by NOTAM, Automated Terminal Information Service (ATIS), or ATC.

5.18.3.3. Operations are authorized on runways where BAK-12 systems with an eight-point cable tie-down system are installed. Operation over raised barrier cables with disc-type support (except donut supported BAK-12 cables restrained with eight point tiedowns) at high speeds may result in damage to the airplane.

5.18.4. Other Airfield Requirements.

5.18.4.1. Consult with HQ AMC/A3AS (Airfield Suitability Branch) for suitability guidance. Airfield certification requirements are detailed in the ASRR.

5.18.4.2. Aircrews and planning agencies will contact HQ AMC/A3AS for all questions pertaining to airfield weight bearing capacity and will review the GDSS/ASRR before all off-station operations. HQ AMC/A3 is the waiver authority for the restrictions in GDSS Giant Report and ASRR for AMC and AMC-gained aircraft, unless specifically delegated in this or AMCI 11-208. Direct GDSS Giant Report and ASRR waiver requests to HQ AMC/A3AS. HQ AMC/A3V is the OPR for waivers to airfield restrictions. MAJCOM/A3/DO is the waiver authority for non-AMC missions. The PIC is responsible for waiver compliance.

5.18.4.3. For other than hard-surfaced runways or taxiways, the airfield must be listed in the ASRR as certified or have a current LZ survey.

5.18.5. RCR Limitations. When RCR is not available, the PIC will refer to the flight manual for standard ICAO conversions based on general runway condition; be conservative when dealing with unknown conditions (e.g., forward operating bases (FOBs), unpaved runways). Normally, RCR values are not reported for taxiways and ramps. During periods of reported low RCR, the taxiways and ramps may have an even lower RCR than reported for the runway. The runway surface should be considered wet when water on the runway causes a reflective glare.

5.18.5.1. RCR and RSC. The performance charts used to determine braking action are based on concrete runways. The RCR values for the following runway surfaces in **Table 5.5** are estimates based on operational experience and should be used only as a guide.

Table 5.5. RCR Values.

TYPE SURFACE	RCR (DRY)	RCR (WET)
Asphalt	23	12
Aluminum Matting	20	10
M8A1/With Anti-Skid (PSP)	20	8
Clay	16	5
Crushed Rock	16	5
Sand	16	5
M8A1/Without Anti-Skid (PSP)	13	3

5.18.5.2. Limit C-130 operations into and out of slush or water covered runways to a covering of one inch. This number is based on performance charts where an RSC of 10 is equal to one inch of slush or water. Performance data where more than one inch of slush or water is present may not be accurate.

5.18.6. Wind Limitations. All maximum effort operations must fall in the "recommended" area of charts (corrected for RCR) unless otherwise approved by OG/CC.

5.18.7. Takeoff Speeds. If Vmeto is used for takeoff, climb until clear of the real or simulated obstacle at max effort obstacle clearance speed. If Vmca is used for takeoff, climb until clear of the real or simulated obstacle at Vmca + 10 knots.

5.18.7.1. If obstacles are a factor, use Vmeto and max effort obstacle clearance speed without Vmca corrections. If unable to clear obstacles using Vmeto and maximum effort obstacle clearance speed, reduce aircraft gross weight or delay mission for more favorable conditions.

5.18.7.2. The PIC will ultimately make the decision to use Vmeto or Vmca based on a consideration of all available data including: weather, runway length, Vmeto, Vr, Vmca, Vmcg, applicable airfield survey, and a review of hazards, obstructions, and terrain both laterally and along the climb out flight path. Peacetime restrictions: take-off at Vmca or Vmeto, whichever is greater unless obstacles are a factor. ***WARNING:*** Max effort operations at high altitude, gross weight, and temperatures are critical; climb angles as low as 2.5 degrees may prevent the aircraft from accelerating. Any further climb angle increase may result in the loss of airspeed and the onset of a pre-stall buffet.

5.18.8. Anti-icing fluid. AMS 1428, Type II and IV anti-icing fluid is authorized for use in extreme climatic conditions. Due to the shearing properties of Type II/IV anti-icing fluid, it may be necessary to increase takeoff speed. When Type II/IV anti-icing fluid is used, increase takeoff speed to a minimum of 110 KIAS and make necessary distance corrections to performance data. Also reference **paragraph 6.21.2**

5.19. Aircraft Taxi and Taxi Obstruction Clearance Criteria and Foreign Object Damage (FOD) Avoidance.

5.19.1. Do not taxi an aircraft within 25 feet of obstructions without wing walkers monitoring the clearance between aircraft and obstruction. With wing walkers, avoid taxi obstructions by at least 10 feet. ***EXCEPTION:*** IAW AFI 11-218, aircraft may taxi without marshallers/wing walkers at home station along fixed taxi lines which have been measured to ensure a minimum of 10 feet clearance from any obstruction and the obstruction is permanent. Adjacent aircraft are also considered a permanent obstruction, provided the aircraft is parked properly in its designated spot and is not moving. Aerospace Ground Equipment (AGE) and vehicles are considered a permanent obstruction, provided it is parked entirely within a designated area. Areas will be designated by permanent markings such as painted boxes or lines on the ramp or another suitable means.

5.19.2. When taxi clearance is doubtful, use one or more wing walkers. If wing walkers are unavailable, deplane one or more crewmembers to maintain obstruction clearance and provide marshalling using AFI 11-218 signals. Use wing walkers, deplaned crewmembers, or a crewmember on interphone positioned at the paratroop door(s) to act as an observer while maneuvering on narrow taxiways. During night taxi operations, marshallers will have an illuminated wand in each hand. Wing walkers are only required to have one illuminated wand. Observers will be in a position to see wing walkers at all times (through door or windows) and communicate with the pilot.

5.19.3. FOD Avoidance. Make every effort to minimize the potential for engine FOD. Crews should:

5.19.3.1. Carefully review airfield layout paying particular attention to taxi routes, turn requirements, and areas for potential FOD.

5.19.3.2. Minimize power settings during all taxi operations.

5.19.3.3. Use low speed ground idle whenever possible.

5.19.3.4. Where possible, avoid 180° turns. If it becomes necessary to accomplish a 180° turn on a narrow runway, the turn should be accomplished at an intersection of a link taxiway or at a designated turn around pad.

5.19.3.5. Where possible, avoid taxi operations that position an engine over an unprepared or un-swept surface. If unavoidable, leave the engine in idle (to the maximum extent possible) until the engine is over an improved surface.

5.19.4. Reverse Taxi: The PIC shall coordinate reverse taxi directions and signals with the loadmaster and marshaller (when available). Before reverse taxiing, the loadmaster shall:

5.19.4.1. Secure all cargo and ensure all passengers are seated.

5.19.4.2. Open the aft cargo door and lower the ramp to approximately 12-inches above horizontal.

5.19.4.3. Position on the aircraft ramp to direct reverse taxi and report any hazards. Provide timely interphone instructions on turns, distance remaining, conditions of the maneuvering area, and stopping point.

5.19.4.4. Do not taxi or stop within 25 feet from an obstruction even if using a wing walker.

5.19.4.5. During night reverse taxi operations without NVGs, the PIC and loadmaster will ensure the taxi area is sufficiently lighted.

5.19.5. ***CAUTION:*** Prop Blast during ground operations is capable of causing extensive damage to other aircraft, flight line equipment, and airport facilities

5.19.6. After landing and clearing the runway, and with approval of the PIC, the loadmaster may open the aft cargo door and lower the ramp to approximately 12 inches above horizontal to prepare for cargo off/onload provided equipment, cargo, and passengers remain secure in the cargo compartment.

5.20. Fuel Jettison Procedures.

5.20.1. Aircrews should consider burning down fuel versus jettison, unless safety of flight dictates an immediate jettison (as determined by the PIC). Except in the case of an emergency, before jettisoning fuel, notify the appropriate ATC or flight service facility of intentions, altitude, and location. If available, the PIC will use designated jettison areas, except when safety of flight would be compromised.

5.20.2. For missions tasked by higher headquarters authority, the tasking C2 agency may authorize fuel jettison when an urgent operational requirement dictates immediate recovery/reconstitution of the aircraft and/or aircrew. The tasking C2 agency may provide fuel jettison instructions in the OPORD, mission directive, SPINS, etc.

5.20.3. For training missions, the OG/CC may approve fuel jettison when an urgent operational requirement exists to expedite recovery of the aircraft and all alternatives have been exhausted.

5.20.4. OG/CCs will establish jettison areas and procedures to minimize the impact of fuel jettisoning. Ideally, establish jettison areas at altitudes above 20,000 feet above ground level,

off published airways, avoiding urban areas, agricultural regions, and water supply sources. Avoid circling descents. Initiate AF Form 813, *Request for Environmental Impact Analysis*, and submit it to the base environmental coordinator.

5.20.4.1. **(Added-911AW)** Fuel jettison is not authorized unless required in the course of an emergency situation. Time and conditions permitting, fuel jettison in the local area should be accomplished from the MMJ R-205 to MMJ R-235 from 10-30 DME. Every effort should be made to jettison fuel from the highest altitude the situation permits. Notify ATC if fuel has been jettisoned (including amount).

5.20.5. All jettisons will be followed up with a detailed report filed by the pilot in command immediately after landing (AMC Forms 97, *AMC In-flight Emergency and Unusual Occurrence Worksheet*). Submit AMC Forms 97 through the unit safety office to the MAJCOM with operational control of the mission. Document all pertinent information, including the following items:

5.20.5.1. Scheduled Duration.

5.20.5.2. Actual Duration.

5.20.5.3. Landing Gross Weight.

5.20.5.4. Computed Stopping Distance.

5.20.5.5. Recovery Field.

5.20.5.6. Runway Available.

5.20.5.7. Jettison Altitude/Location.

5.20.5.8. Outside air temperature.

5.20.5.9. Wind direction and velocity.

5.20.5.10. Jettison Amount.

5.20.5.11. Reason for Jettison.

5.20.5.12. Approval Authority.

5.21. Aircraft Speed. IAW AFI 11-202V3, this AFI, and the applicable Dash 1.

5.22. Bird/Wildlife Aircraft Strike Hazard (BASH) Programs. BASH programs are centralized unit efforts that provide information cross-feed, hazard identification, and a consolidated course of action. As a minimum, unit commanders must implement the following procedures:

5.22.1. Ensure compliance with the following Bird Watch condition restrictions.

5.22.1.1. Bird Watch Condition Low - No operating restrictions.

5.22.1.1. **(911AW)** Bird Watch Condition LOW: A condition that exists when there is normal bird activity on and above the airfield with a low strike probability.

5.22.1.2. Bird Watch Condition Moderate - Initial takeoffs and final landings allowed only when departure and arrival routes will avoid bird activity. Local IFR/VFR traffic pattern activity is prohibited.

5.22.1.2. **(911AW)** Bird Watch Condition MODERATE: A condition that exists when increased bird populations are in locations that represent an increased potential for strike. Normally, when the Pittsburgh ATIS/tower reports "bird activity in the area", the SOF or designated representative will elevate the Bird Watch Condition to "Moderate" until he/she has physically checked for this condition. He/she can then downgrade the Bird Watch Condition to LOW if/when the bird activity decreases.

5.22.1.3. Bird Watch Condition Severe - All takeoffs and landings are prohibited. Waiver authority is local OG/CC or equivalent. Parent MAJCOM/A3/DO waiver is required to operate at airfields not controlled by the MAF.

5.22.1.3. **(911AW)** Bird Watch Condition SEVERE: A condition that exists when high bird populations are on or immediately above the active runway or other specific location that represents a high potential for strike. Aircrew will be immediately notified by the best means possible to minimize bird strike potential. The SOF will reference 171st Air Refueling Wing/911th Airlift Wing Bird/Wildlife Aircraft Strike Hazard Plan 91-212 located at the SOF counter for more detailed guidance.

5.22.2. Commanders establish Phase II of the BASH program during increased periods of migratory bird activity. Schedulers shall make every effort to not schedule takeoffs, landings, and low-levels from one hour before to one hour after sunrise and sunset during the Phase II period. Publish significant bird hazards in FLIP AP and the IFR Supplement along with the associated airfield operating hour restrictions and avoidance instructions.

5.22.3. When operating at airfields where no BASH program exists, a PIC has the authority to delay takeoffs and arrivals due to bird condition after coordinating with the appropriate C2 authority.

5.22.3.1. **(Added-911AW)** Although the FAA does make wildlife activity advisories, the absence of Air Force personnel and observers requires aircrews to make their own estimations of appropriate bird watch conditions at several local training bases. All aircrew encountering "moderate" or "severe" bird watch conditions at Pittsburgh IAP-ARS or local training airfields are instructed to report such conditions to command post, base operations, or the SOF. Aircrews are encouraged to request the bird watch condition from tower at military fields.

5.22.4. Consider bird migratory patterns during the enroute portion of the mission to help minimize the potential of an in-flight bird strike. The Bird Avoidance Model (BAM) on HQ AFSC/SEF website contains BASH information including regionalized CONUS bird migration patterns, PFPS software overlay, and the latest news. The Avian Hazard Advisory System (AHAS) website is another source for real time bird hazard information. Both sites may be accessed through the AMC aircrew mission planning portal. See AFPAM 91-212, *Bird Aircraft Strike Hazard (BASH) Management Techniques*, for additional information.

5.22.4. **(911AW)** The Avian Hazard Advisory System (AHAS) and the Bird Avoidance Model (BAM) are available at **http://www.usahas.com/** and are valuable tools predicting bird strike probability. NOTE: the BAM is a predictive model based on historical bird activity.

5.22.5. Following a bird strike, aircrews will land as soon as conditions permit, or as practicable, to have the aircraft inspected by qualified maintenance personnel. Bird strike

damage cannot be accurately assessed in-flight, and undetected damage may result in a complex airborne emergency; only qualified maintenance personnel, on the ground, can make reliable damage assessments. The PIC should complete AF Form 853 and fax to nearest Air Force Flight Safety Office after landing.

5.23. Functional Check Flights (FCFs), Acceptance Check Flights (ACFs) and Operational Check Flights (OCFs). FCFs, ACFs, and OCFs will be accomplished IAW T.O. 1-1-300, *Functional Check Flights and Maintenance Operational Checks*, TO 1C-130E(H)-6CF-1, *Acceptance and/or Functional Check Procedures Manual*, and AFI 21-101. Crews should only perform tasks or functions contained in specific technical order guidance. If requested to perform a non-standard function, PICs should contact their OG/CC to see if an FCF applies.

5.23.1. FCF Restrictions. See T.O. 1-1-300 and AFI 21-101.

5.23.1. **(911AW)** Functional Check Flights (FCFs) and Operational Check Flights (OCFs) will be conducted IAW 911 AWI 21-101, *Joint Procedures for Functional Check Flight and Operational Checks*, in addition to this AFI.

5.23.2. The OG/CC, or deployed equivalent, may authorize temporary waivers to FCF procedures for aircrew qualification when operationally necessary. Permanent waivers require MAJCOM/A3/DO approval IAW Chapter 1.

5.23.3. The OG/CC is responsible for the wing FCF program. Publish additional guidance in local supplement to this instruction. The OG/CC may authorize a partial FCF to check only those systems disturbed by maintenance, an inspection or modification.

5.23.3. **(911AW)** The 758th Airlift Squadron will obtain authorization from the 911 OG/CC prior to conducting an FCF. The 758 AS/DO is responsible for ensuring aircraft commander and flight engineer participation in the Quality Assurance (QA) briefing prior to and immediately following the flight.

5.23.4. Conduct check flights within the designated check flight airspace of the base from which the flight was launched except when the flight must be conducted under specific conditions, not compatible with local conditions and area restrictions.

5.23.4. **(911AW)** Unless mission requirements dictate otherwise, all FCF/OCF flights will plan to be conducted while holding east on the MMJ R-085, 15 DME fix with 25 mile legs, between 17,000 MSL and Flight Level 230. Contact Cleveland Center, preferably 1 week prior to conducting FCF/OCF flights, during normal business hours, at (440) 774-0624 for airspace coordination.

5.23.5. The decision to approve a combined FCF and ferry flight is the responsibility of the MAJCOM/A3/DO.

5.23.6. The OG/CC will only certify highly experienced instructors as FCF crewmembers. The OG/CC will determine FCF crew complement after a thorough ORM assessment for that specific FCF flight.

5.23.6. **(911AW)** The OG/CC will designate pilots and engineers qualified to perform FCF/OCFs. FCF certification will be documented on the 758 AS Letter of Xs.

5.23.7. Ideally, conduct FCFs in daylight, VMC. OG/CCs may authorize a flight under a combination of VMC and IMC. Begin the flight in VMC. If the aircraft and all systems are

operating properly, the crew may proceed IFR through cloud cover to "VFR on Top" for the altitude phase of the flight.

5.23.8. If a malfunction occurs during a FCF, the Maintenance Group Commander may subsequently release the aircraft for flight providing the malfunction is not related to the condition generating the FCF, and the original condition operationally checked good.

5.23.9. Only FCF crews shall perform high-speed taxi checks. Perform checks IAW the flight manual and maintenance technical orders. Prepare the aircraft with minimum fuel necessary to accomplish the check to limit brake/tire wear, (ensure fuel on board will permit a safe return to base should the aircraft unexpectedly become airborne) and turn on the anti-skid system. The FE will calculate takeoff data for the highest speed planned and ensure runway available allows sufficient stopping distance for existing conditions without exceeding normal brake energy limits.

5.24. Participation in Aerial Events. See AFI 11-209 and the appropriate MAJCOM supplement.

5.25. Traffic Alerting and Collision Avoidance System (TCAS). It is imperative to follow resolution advisories (RAs) to obtain aircraft separation computed by TCAS. Failure to follow the computed RA may increase the probability of a midair collision. Pilots who deviate from an ATC clearance in response to an RA shall notify ATC of the deviation as soon as practical and promptly return to the ATC clearance when the traffic conflict is resolved or obtain a new clearance.

5.26. Radar Altimeter.

5.26.1. Any crewmember detecting the illumination of the radar altimeter Low Altitude Warning Light will immediately notify the pilot flying the aircraft. Terrain clearance and aircraft position must be verified.

5.26.2. Before departure, set the radar altimeter for emergency return.

5.26.3. The navigator and pilot will use the same radar altimeter setting unless briefed otherwise.

5.26.4. Set the radar altimeter to the Height Above Threshold/Height Above Airport (HATh/HAA) during instrument approaches.

5.27. Buddy and Windmill Taxi Starts. Buddy and windmill taxi starts may be performed when approved by the OG/CC or DIRMOBFOR. This authority may be delegated to the squadron or MC when the unit is deployed. This authorization will not be construed to allow repeated buddy or windmill starts at various scheduled enroute stops. Nonessential crewmembers and all passengers will be loaded after completion of a buddy or windmill taxi start.

5.28. Reduced Power Operations (N/A for 3 Engine Operations). Pilots will normally use reduced power for takeoffs provided refusal speed (Vr) is equal to or greater than takeoff speed. Use normal takeoff power if Vr is less than takeoff speed.

5.28.1. Reduced power operations for normal takeoffs and takeoffs from stop/touch-and-go landings will use a predicted torque corresponding to 900 degrees TIT not to exceed 19,600

inch-pounds of torque. Power settings up to maximum power may be used during stop-and-go takeoffs to comply with training restrictions listed in this chapter.

5.28.2. Reduced power operations should not exceed 932 degrees TIT for -7 engines or 970 degrees TIT for -15 engines during cruise. Cruise at a constant KTAS (280 KTAS for -7 engines and 300 KTAS for -15 engines), adjusting TIT at least every hour. For legs of 2 hours or less consider cruising at 260 or 270 KTAS (280 or 290 for -15 engines). On short legs with cruise altitude under 10,000 MSL, KIAS should be limited to 210 or less. On missions that are not time critical consider flying at a TAS corresponding to 850 degrees TIT (900 degrees TIT for -15 engines) to preserve first stage turbine vanes. This reduction in TIT will decrease fuel consumption by approximately 4%, increase turbine life, decrease sulfidation corrosion by approximately 200%, and increase thermocouple life.

5.28.3. Reduce power for formation takeoffs to a torque corresponding to maximum continuous power (970 degrees TIT for -15 engines). Formation leaders will brief takeoff torque when different series C-130 aircraft are in the same formation.

5.28.4. Reduced power is not authorized for max effort takeoffs.

5.29. Aircraft Recovery from Unprepared Surfaces. Aircrews will not normally attempt to recover an aircraft after inadvertent entry onto unprepared surfaces not suitable for taxi; ground crews will accomplish aircraft recovery. Unless an emergency dictates otherwise, aircrews may only accomplish recovery if there is no aircraft damage, the surface will support the aircraft, and the PIC has coordinated with appropriate MAJCOM headquarters maintenance authorities through 618 AOC (TACC) or appropriate C2 agency.

5.30. Hand-held (HH) GPS for Laptops with Moving Map Display (MMD).

5.30.1. The HH GPS and MMD are designed as a situational awareness tool. The pilot monitoring and navigators are designated the primary users of MMD. PICs may authorize other crewmembers to use the MMD to assist with situational awareness. FalconView is the only AMC approved software for MMD use.

5.30.2. Aircrew members using MMD will immediately discontinue monitoring if safety of flight is inhibited or during any other situation the PIC determines it unsafe to use.

5.30.3. Do not use HH GPS/MMD for primary navigation. All chart and fixing requirements are still required. The hand-held GPS will not be used to update navigation equipment (SCNS/INS).

5.30.4. Before using the HH GPS in-flight, aircrew members must receive training and aircraft must be capable of supporting the HH GPS equipment.

5.30.5. Only GPS units approved for use with laptop computers will be used.

5.31. Aircrew Fatigue. It is the crewmember's responsibility to be properly rested for each mission. However, if circumstances prevent this, no MAF/AMC crewmember should feel pressured to fly when not properly rested. A crewmember who is fatigued will immediately notify the PIC who will then contact the Stage Manager, 618 AOC (TACC), Home Station, or appropriate Command and Control if unable to start or complete a mission safely. Declaring "Safety of Flight" may be required in this situation.

5.32. Aviation Safety Action Program (ASAP). The Military Aviation Safety Action Program is an anonymous, self-reporting system modeled after successful FAA/Airline programs to encourage the voluntary reporting Operational issues and events. It is designed to provide a non-punitive environment for the open reporting of safety concerns and information that might be critical to identifying hazardous situations and precursors to accidents. These safety concerns may be either observed or experienced by the submitter. The goal is to prevent mishaps by addressing those unintentional errors, hazardous situations and events, or high-risk activities not identified and/or correctable by other methods or through traditional safety reporting sources.

5.32.1. The AMC ASAP website is accessible at **www.safety-masap.com**. The website is secure and identity-protected and allows individuals to submit ASAP reports from virtually any location. Username and Password can be obtained from the crewmember's Wing/Group Safety office. Crewmembers can contact the AMC ASAP program manager via email at **amc.asap@scott.af.mil.** The website also allows crewmembers to review previously entered reports and check resolution of submitted reports.

5.32.2. If an ASAP submission is made within 24 hours of an event, the submission will protect the submitter from punitive/adverse action except in cases of willful disregard of regulations and procedures. The value in this 24 hour forgiveness policy for non-intentional events is the vastly increased incentive for crewmembers to submit ASAP reports.

Chapter 6

AIRCREW PROCEDURES

Section 6A—Pre-Mission

6.1. Aircrew Uniform.

6.1.1. Aircrew will wear the aircrew uniform, as outlined in AFI 36-2903, *Dress and Personal Appearance of Air Force Personnel*, and the appropriate MAJCOM supplement, on all missions, unless otherwise authorized. When the DOD 4500.54-G, DOD Foreign Clearance Guide (FCG) requires civilian attire, dress conservatively.

6.1.2. OG/CCs will determine clothing and equipment to be worn or carried aboard all flights commensurate with mission, climate, and terrain involved.

6.1.2.1. See AFI 11-301V1, *Aircrew Flight Equipment (AFE) Program* for minimum aircrew clothing requirements. All crewmembers will have Nomex gloves in their possession.

6.1.2.2. Crewmembers will remove rings and scarves before performing aircrew duties.

6.1.3. Personnel will have the appropriate items of clothing in their possession when flying in Arctic and Antarctic regions. ***EXCEPTION*:** Not applicable to transoceanic flights or when staging or transiting Joint Base Elmendorf, AK.

6.2. Personal Requirements.

6.2.1. Refer to current Unit Deployment Manager guidance for applicable deployment requirements.

6.2.2. Passport. Crewmembers will carry a valid passport on all missions outside the CONUS. OCONUS-based units are not required to carry passports on missions in the local area. ***EXCEPTION:*** Unit commanders may authorize newly assigned personnel who have applied for, but not yet received, a passport to act as crewmembers on missions not scheduled to transit locations where passports are required.

6.2.3. Shot Record. Crewmembers must maintain worldwide shot requirements and carry their shot records on all missions outside the CONUS (except overseas units on local training missions or operational missions in the U.S.).

6.2.4. Driver‘s License. A valid state driver‘s license is required on each TDY where use of US government general purpose vehicles may be required. Crewmembers will contact the local airfield manager before driving on the flight line.

6.2.5. Identification Tags. Crewmembers will carry two identification tags on all flights.

6.2.6. FOD Hazards. Crewmembers will not wear wigs, hairpieces, rings, ornaments, or earrings in the aircraft or on the flight line. ***EXCEPTION:*** Crewmembers may wear plain elastic hair fasteners and/or pins, clips, or barrettes providing they do not interfere with the wearing of headsets, or the donning of oxygen equipment. They will be accounted for before and after flight.

6.2.6.1. Units will identify marking requirements for personal/professional equipment in their local supplement.

6.2.6.1. **(911AW)** Crewmember helmets, oxygen masks, and helmet bags will be marked by 911th AFE with unit Stock Record Account Number (SRAN) and the individual's locker number.

6.2.7. Helmets and Oxygen Masks. (N/A for AE crewmembers). Crewmembers will carry a personal helmet:

6.2.7.1. Anytime parachutes are required to be carried IAW AFI 11-2C-130V3 Addenda A.

6.2.7.2. Whenever the aircrew requires helmet-mounted night vision goggles or flash-blindness devices (MIL-G and/or PLTZ goggles).

6.2.7.3. When required for wear of the aircrew chemical defense ensemble.

6.2.7.4. For unpressurized flight operations IAW AFI 11-202V3.

6.2.7.5. When required to be mobile in the cargo compartment during airdrop operations.

6.2.8. Flashlights. Each crewmember must carry an operable flashlight for night flights.

6.2.9. A reflective belt or suitable substitute will be worn on flight lines during hours of darkness or periods of reduced visibility.

6.2.10. Tool and Airdrop Kits. At least one engineer's and one loadmaster's tool kit will be on board for all missions. One loadmaster airdrop kit will also be aboard the aircraft for aerial delivery missions. Units will identify tool kit contents and inventory procedures in their local supplement. As a minimum, the flight engineer tool kit will contain the tools necessary to perform the emergency actions in section 3 of the flight manual and hostile environment repair procedures. One NVG aircraft preparation kit will be on board for NVG missions.

6.2.10.1. **(Added-911AW)** The requirement for a flight engineer tool kit will be satisfied by using the maintenance tool kit pre-positioned on all 911 AW aircraft. The key will be stored in the aircraft forms binder. If the engineer must access the toolbox, he/she will inventory the toolbox, sign the AF Form 177 and make an entry into the AFTO Form 781A. Upon completion of the mission, maintenance will sign for and take control of the toolbox.

6.2.10.2. **(Added-911AW)** Airdrop kits are pre-positioned on the aircraft by 32nd Aerial Port Squadron for all airdrop missions, with the exception of local training flights air-dropping training bundles only. Loadmasters will inventory the applicable airdrop kit prior to and after each use.

6.2.11. Hostile Environment Repair Kit. One Hostile Environment Repair Kit (HERK) will be onboard for all OCONUS and contingency deployment missions. The HERK will not normally be onboard the aircraft for CONUS and non-contingency missions. Units will identify where the HERK will be stored on the aircraft in the local supplement to this AFI. The flight engineer will ensure the HERK is onboard and serviceable (sealed) during the aircraft preflight prior to departure. Additionally, the fight engineer will ensure one-each generator and starter pad is onboard the aircraft for missions requiring the HERK. The

HERK will not be removed from the aircraft until mission completion, and then only by the owning unit.

6.2.11. **(911AW)** If the Hostile Environment Repair Kit (HERK) is required on the aircraft, it will be stored in the galley outboard storage compartment.

6.2.12. NVGs. All crewmembers will carry and preflight their own NVGs prior to flight for missions using NVGs. If available, one spare set of NVGs will be carried per crew. Each crewmember will carry approved spare batteries for their own NVGs. The spare will also be preflighted by the PIC.

6.2.12. **(911AW)** Aircraft commanders will ensure a spare set of NVGs is signed out from Aircrew Flight Equipment. The aircraft commander will preflight the spare NVGs to his/her specifications and have them available on the flight deck.

6.2.12.1. Both Pilots will wear the same type NVGs.

6.3. Pre-Mission Actions.

6.3.1. Before transiting areas outside the CONUS, aircrews will review theater-specific information necessary to successfully operate there. The review, at a minimum, should include AFI 11-202V3, AFTTP 3-3.C-130E/H, and the following:

6.3.1.1. Review tasking, itinerary, and altitude reservation (ALTRV) requirements.

6.3.1.2. Review applicable OPORD, SPINS, Virtual Risk Assessment (VRA), Country Risk Assessment (CRA), and FLIP. Obtain and carry this information if required.

6.3.1.3. Review the DOD 4500.54-G, FCG for areas of operation (to include classified portion). Obtain necessary diplomatic clearances where required.

6.3.2. Obtain required customs forms.

6.3.3. Obtain worldwide FLIPs and sufficient communications security (COMSEC) materials for the duration of the mission.

6.3.4. Ensure physiological training, annual physical, immunizations, and flight evaluations will remain current for all crewmembers throughout the TDY period.

6.3.5. Ensure visas have been received, if required.

6.3.6. Obtain terrain charts for unfamiliar destinations, if available.

6.3.7. Compile sufficient spare forms, flight orders, etc. to cover the TDY period.

6.3.8. Passenger Restrictions. Release space available seats to the maximum extent possible unless overriding safety, legal or security concerns prohibit space available travelers from flying on specific missions. The only passengers on missions transporting DVs will be those of the official party and those space available passengers authorized by the lead POC for the traveling party. Authorization must be approved 24 hours in advance.

6.3.8.1. Space Available Passengers. For other than revenue and White House missions, PICs are authorized to release space available seats on mission legs when no official passengers are aboard (positioning and de-positioning legs). Coordinate with C2 agency to release available seats to the passenger terminal. PICs are encouraged to release maximum space available seats subject to the following restrictions:

6.3.8.1.1. Revenue Missions. These are missions for which the using agency (typically a government agency other than DOD) is reimbursing DOD for use of the aircraft. Space available passengers on revenue missions must be approved 24 hours in advance by USAF/ CVAM, theater AMD or JOSAC (as appropriate) and the using agency contact officer through unit C2 agencies. This is essential to ensure proper funding and reimbursement. Consult C2 to determine mission revenue status if in doubt. Congressional Delegations (CODEL) are not revenue missions.

6.3.8.1.2. White House Support Missions. Space available passengers will generally not be permitted aboard White House support mission aircraft without express permission of HQ USAF/CVAM. This is normally due to the security status of the aircraft, which may include positioning and de-positioning legs. When it is necessary to move aircrew members or support personnel on White House support mission aircraft, the WHMO will be advised and permission obtained through the unit C2 and CVAM. On de-positioning legs space available passengers will usually be permitted if the aircraft is no longer required to maintain an upgraded security status.

6.3.8.1.3. Billing. Space available passengers on revenue missions may be subject to being billed commercial first-class airfare by the using agency for the applicable route, depending on that agency's policy. If the DV or on-board contact officer releases seats, aircraft commander must ensure that any additional financial liability for the passengers is specified by the using agency on-board contact officer. PIC will ensure passengers understand and agree to any reimbursement conditions prior to boarding.

6.3.8.2. No-show passenger baggage or baggage of passengers removed from flight will be downloaded prior to departure. Also, see **paragraph 13.4.2.8**.

6.3.8.3. The PIC is responsible for ensuring all passengers receive all required passenger briefings regardless of the category of passenger.

6.3.9. Ensure the correct aircraft navigation database is loaded or will be carried, as appropriate.

6.3.10. Consider any foreseeable safety risks and risk mitigation factors IAW ORM.

6.4. Aircrew Publications Requirements. Primary crewmembers will carry the publications specified in **Table 6.1** on all missions. Units may specify additional publications in their unit supplement. When the crew includes two crewmembers in the same specialty, (i.e. two loadmasters on airdrop missions) each will carry a checklist but otherwise only one set of publications is required. Units may establish a process to provide these publications onboard the aircraft in-lieu-of individuals carrying publications. This process will be described in the local unit supplement. Reference AFI 11-215, *USAF Flight Manuals Program*, for guidance on electronic publications.

6.4.1. **(Added-911AW)** The AC will ensure that a paper copy of TO 1C-130H-1 and TO 1C-130H-1-1 are onboard the aircraft prior to every flight.

6.4.2. **(Added-911AW)** The AC will ensure a minimum of 2 current Electronic Flight Bags are onboard the aircraft prior to every flight and readily accessible to flight deck crewmembers.

6.4.2.1. **(Added-911AW)** Each crewmember's EFB will have a minimum battery level of at least 10% of each hour of total planned flight time, but not less than 50%. For any single leg lasting longer than 8 hours, the battery must be charged to at least 80% for that leg of flight. Each aircrew member is responsible to ensure that sufficient battery charge will meet mission requirements.

6.4.3. **(Added-911AW)** Pilots, Navigators, and Flight Engineers will carry the 911 AW Tactical Aircrew Flimsy on all missions.

Table 6.1. Aircrew Publications.

PUBLICATION	AIRCREW
Aircraft Flight Manual (-1)	E
Aircraft Performance Manual (-1-1)	E
Aircraft Flight Manual (SCNS -1-4)	N (FP if navigator not on board aircraft)
Abbreviated Checklists	All crewmembers will carry the abbreviated checklist(s) for their crew position.
TO 1C-130-101	E
TO 1C-130A-9	L
AFI 11-202V3	FP
AFI 11-2C-130V3	E
AFTTP 3-3.C-130E/H Combat Mission Guide (minimum of Sections 1 and 2)	AC, FP, and N
AFI 13-217, *Drop Zone and Landing Zone Operations*	N (FP if navigator not on board aircraft)
AFI 11-231, *Computed Air Release Point Procedures*, (Airdrop-qualified only)	N

6.5. Airfield Review. Aircrews will consult the web-based airfield database maintained by HQ AMC/A3AS (Airfield Suitability Branch) and comply with the GDSS/ASRR for updates to airfield operability, weight bearing capability and Terminal Instrument Procedures (TERPS) reviews. Refer to AFI 11-202V3 Chapter 8 for non-DOD published approach criteria.

6.6. Aircrew Intelligence Briefing. Aircrews will receive an intelligence briefing that will emphasize terrorist, enemy, and friendly political and military development in the area in which they will be flying. Obtain timely intelligence updates prior to entering a specific area of operations (AOR). In theater, aircrews should receive intelligence updates on initial arrival at a forward operating location (FOL), or enroute stop, and thereafter when significant developments occur. Report information of possible intelligence value to the local intelligence office as soon as practical to ensure timely dissemination of mission reports (MISREPs).

Section 6B—Predeparture

6.7. Global Decision Scheduling System Account. Pilots will obtain a GDSS account prior to operating on IFM-planned sorties. Download aircrew departure papers using the GDSS account, at locations without an AMC C2 presence. For operational missions, ensure GDSS account passwords are active prior to departing home station.

6.7.1. On receipt of the IFM package, Pilots will:

6.7.1.1. Review IFM papers for accuracy. (Weather, NOTAMS, dips, times and routing)

6.7.1.2. Validate the flight plan, and

6.7.1.3. Report discrepancies immediately to the flight manager.

6.7.2. The crew papers do not contain secure information from the ATO or SPINS. Flight managed missions clearly indicate that secure information such as tactical routings and threats must be reviewed prior to departure. Crews shall contact local Intel and Tactics prior to departure.

6.7.3. Pilots are required to communicate with their flight manager or contracted dispatcher prior to departure on every flight managed mission.

6.8. Flight Crew Information File (FCIF).

6.8.1. Crewmembers will review FCIF, Volume 1, before all missions or ground aircrew duties, and update the FCIF currency record with the latest FCIF item number, date, and crewmember's initials.

6.8.1.1. Electronic signatures or sign-off (e.g. PEX or GTIMS) may be used on FCIFs.

6.8.2. Crewmembers delinquent in FCIF review or joining a mission enroute will receive an FCIF update from a primary aircrew member counterpart on the mission.

6.8.3. Crewmembers not assigned or attached to the unit operating a mission will certify FCIF review by entering the last FCIF number and their initials behind their name on the file copy of the flight authorization or file copy of their crew orders. This applies to all crewmembers if the electronic sign-in system is not working at show time.

6.9. Flight Crew Bulletins (FCB). Items in the FCB may include local procedures and policies concerning equipment and personnel generally not found in any other publications.

6.10. Mission Kits. Carry mission kits on all operational missions. Publications and forms may be maintained and carried electronically provided operable in-flight viewing and printing capability exists. Suggested items include: ***Note:*** *Indicates mandatory for all TACC or AMC missions away from home station and as directed by C2 authority.

6.10. (911AW)Copilots will ensure, if required, that a mission kit is located on the flight deck and has been inventoried prior to flight.

6.10.1. Publications:

6.10.1.1. *AFI 11-401, *Aviation Management*.

6.10.1.2. * DOD Manual 4140.25-M, VII, *DOD Management of Bulk Petroleum Products, Natural Gas, and Coal*, Chapter 16

6.10.1.3. *AMCI 11-208, *Tanker/Airlift Operations*.

6.10.1.4. Electronic Airfield Suitability and Restrictions Report (E-ASRR).

6.10.1.5. *AMC Aircrew Border Clearance Guide.

6.10.1.6. AMC Handbook 11-214, *AMC Aircrew Hazardous Materials Handbook.*

6.10.1.7. *Flight Crew Bulletin (FCB).

6.10.1.8. AFI 11-289, *Phoenix Banner, Silver, Copper Operations.*

6.10.1.9. AFTTP 3-3.C-130E/H, *Combat Aircraft Fundamentals*

6.10.2. DD 1351-2, *Travel Voucher or Sub Voucher***.**

6.10.2.1. DD 1351-2C, *Travel Voucher or Sub Voucher (Continuation Sheet).*

6.10.2.2. *CBP Form 6059B, *Customs Declaration Form*.

6.10.2.3. DD 1748-2, *Airdrop Malfunction Report (Personnel-Cargo).*

6.10.2.4. *DD 2131, *Cargo/Passenger Manifest*.

6.10.2.5. *CBP 7507, *General Declaration Outward/Inward*.

6.10.2.6. *AF Form 15, *United States Air Force Invoice*.

6.10.2.7. Standard Forms 44, *Purchase Order-Invoice-Voucher***.**

6.10.2.8. AF IMT 457, *USAF Hazard Report*.

6.10.2.9. *AF IMT 651, *Hazardous Air Traffic Report (HATR).*

6.10.2.10. *AFTO IMT 781, *ARMS Aircrew/Mission Flight Data Document*.

6.10.2.11. *AF IMT 1297, *Temporary Issue Receipt*.

6.10.2.12. AF Form 3211, *Customer Comments*.

6.10.2.13. *AF IMT 4108, *C-130 Fuel Log*.

6.10.2.14. *C-130 Flight Data Worksheet.

6.10.2.15. AMC Form 43, *AMC Transient Aircrew Comments*.

6.10.2.16. AMC Form 54, *Aircraft Commander's Report on Services/Facilities.*

6.10.2.17. AMC IMT 97, *AMC In-Flight Emergency and Unusual Occurrence Worksheet.*

6.10.2.18. AF IMT 711B, *USAF Mishap Report***.**

6.10.2.19. *AF IMT 4031, *Crew Resource Management (CRM) Assessment Sheet***.**

6.10.2.20. *AF IMT 4075, *Aircraft Load Data Worksheet*.

6.10.2.21. AF IMT 4064, *C-130 Takeoff and Landing Data Card***.**

6.10.2.22. Japanese Customs Service Forms.

6.10.2.23. AF IMT 853, *Air Force Wildlife Strike Report*

6.10.3. Orders:

6.10.3.1. DD1610, *Request and Authorization for TDY Travel of DOD Personnel***.**

6.10.3.2. AF IMT 1631, *NATO Travel Orders* (when required).

6.10.3.3. *AMC IMT 4327A, *Flight Authorization (F*A) (or MAJCOM prescribed according to AFI 11-401*)*.

6.10.4. Miscellaneous:

6.10.4.1. *Box car seals.

6.10.4.2. *Masking tape.

6.11. Route Navigation Kits.

6.11.1. A route navigation kit is issued at home station and remains with the aircraft until return. Kits contain sufficient quantities of material to cover the planned mission and global operations as required.

6.11.2. The minimum contents of route navigation kits are in **Table 6.2**.

6.11.2.1. Units issuing Laptops to aircrews with updated electronic FLIP planning documents (GP, AP/1, AP/1B, AP/2, AP/3) do not have to issue paper version.

6.11.3. On local unit training sorties, local area navigation kits may be used in lieu of route navigation kits in **Table 6.2**. Contents of these kits will be determined by the unit.

Table 6.2. Route Navigation Kit Contents.

Item (applicable to area of operation):	Number
FLIP Planning (sections GP, AP/1, AP/1B, AP/2, AP/3)	1
FLIP IFR Supplement	1
FLIP VFR Supplement	1
FLIP Flight Information Handbook	1
FLIP Enroute Charts (high and low)	2
FLIP Instrument Approach Procedures (high and low)	*3
Standard Terminal Arrival Routes (STAR)	*3
Topographical and Sectional Charts for areas of operation (GNC/OPC/TPC/JNC/JOG/Sectionals)	as required
DOD Area Arrival Charts	(2) if available
Note: * Two required when a navigator is not part of the crew.	

6.12. Briefing Requirements.

6.12.1. Pre-Departure Briefing Items. The PIC will contact the local C2 agency to confirm mission requirements. The PIC and controlling agency jointly share responsibility to identify special briefing requirements. Briefings may include buffer zone, electronic warfare activities, SAFE PASSAGE, Electromagnetic Interference (EMI), diplomatic clearance, hazardous cargo, anti-hijacking procedures, operations and safety supplements to flight manuals, and OPORD procedure.

6.12.2. Pilot in Command Pre-Departure Briefing. Cover all applicable items of the operations briefing, including MAJCOM, NAF, unit SIIs, CRM, and ORM levels and mitigating factors. Brief crewmembers on the specific mission details if not previously accomplished. Use briefing guides contained in AFTTP 3-3. C-130E/H.

6.12.2.1. Pilot in Command Enroute Briefing. In the enroute system, the PIC will ensure that an aircrew briefing is conducted prior to the first sortie of the day. As a minimum, brief crewmembers on specific mission details for that day's sortie(s), CRM, and the ORM level and mitigating factors for the mission. Complete this briefing prior to engine start.

6.12.2.2. NVG Briefing Requirements. For missions conducting NVG operations crews will review and coordinate NVG failure procedures for all phases of the mission. Any crewmember who experiences NVG problems will inform the rest of the crew. During cargo compartment emergencies, return to normal lighting until the emergency is resolved. Discuss actions for Smoke and Fumes in the aircraft.

6.12.2.3. For AMC Special Missions, aircrews shall be briefed using the Special Mission briefing guide prior to departing home station or the last station before reaching on-load location. The briefing is located under miscellaneous documents on the AMC/A3V website: **https://private.amc.af.mil/A3/A3V/publications.aspx**.

6.12.3. Specialized Briefing. Use specialized briefings to detail operating procedures or SII peculiar to various crew positions, and to answer questions relating to those specialties. Specialized briefings review formation tactics and procedures, and technical instructions for specialized equipment operations. All crewmembers should attend each briefing. Crewmembers may only be excused from specialized briefings for pre-flight duties by the PIC; however, the PIC will back brief all appropriate items. PICs will use AFTTP 3-3.C-130E/H briefing guides. If the briefing guide is not contained in AFTTP 3-3.C-130E/H, then a MAJCOM approved briefing guide should be used.

6.12.4. Weather Briefings. The PIC will obtain a briefing on current weather, trends, and forecast for the proposed route, destination, and alternates. The PIC will brief primary crewmembers on appropriate weather conditions before departure.

6.12.4.1. Aircrews flying flight-managed sorties will use the weather briefing provided with the IFM aircrew departure papers. Local weather flights/agencies may update local takeoff weather data, but aircrews, working through their flight manager/dispatcher, will use 618 AOC (TACC) weather operations (or the Operational Weather Squadron (OWS) supporting the theater C2 agency) as the final arbiter for weather-related issues and further updates.

6.12.4.2. On sorties not planned by a flight manager, crews should obtain weather information from their local weather flight or the OWS responsible for weather support at their location secondary.

6.12.4.3. If adequate services are not available, and the crew cannot contact their home weather flight, OWS, or 618 AOC (TACC) weather operations, obtain weather through any means available prior to mission accomplishment.

6.12.4.4. Weather information is permitted from US Military weather services, any FAA-approved weather source, or any host nation civil or military weather source.

6.12.4.5. Verbal weather briefings are authorized for local flights. Face-to-face briefings are not required.

6.12.5. Buffer Zone. Prior to operating an aircraft within or adjacent to an established buffer zone, the PIC will ensure primary crewmembers are briefed on current buffer zone procedures outlined in appropriate directives.

6.12.6. Peacetime and Wartime SAFE PASSAGE Procedures. Pilots must be familiar with peacetime and wartime safe passage of friendly military aircraft.

6.12.7. IFM Briefing. PICs will thoroughly review the aircrew departure papers provided for IFM sorties. The PIC, or designated representative, will contact the flight manager if there are discrepancies with the departure papers or to resolve any questions before signing the flight plan.

6.12.8. Training Evaluation Briefing. Before all training/evaluation missions, instructors/flight examiners will brief the crew on requirements/objectives for each student or examinee.

6.12.9. Intelligence Briefings. Before operating in a combat environment, the crew will obtain a current intelligence briefing.

6.13. Call Signs.

6.13.1. Training Missions. Aircraft will use the unit static call sign prefix followed by a 2-digit suffix assigned by the parent unit.

6.13.1.1. **(Added-911AW)** On local tactical training missions, use a formation call sign of "PITT 01." Subsequent formations on the same day will use "PITT 02, PITT 03, etc.". Individual

6.13.2. Operational Missions. Use call signs assigned by OPORD, FRAG, or diplomatic clearance. If no call sign has been assigned, use unit static call signs. When flying AMC missions, and no other call sign has been assigned, use the "REACH" call sign followed by the last digit of the year the aircraft was built and the last 3 digits of the aircraft tail number (or as required by diplomatic clearance). To complete flight plans, put the letters "RCH" followed by the last digit of the year the aircraft was built and the last 3 digits of the aircraft tail number.

6.13.3. The Reach 01 and 18 call signs are reserved for the AMC/CC and 18 AF/CC.

6.13.4. Aeromedical Evacuation (AE). For actual AE missions, use the call sign "Evac" followed by the five-digit aircraft number (example, Evac 12345) or mission designator. Refer to FLIP GP, Chapter 4. When the AE portion of the mission is completed, normal call signs will be used. This does not alleviate the responsibility to use diplomatically cleared call signs when required.

6.13.5. Search and Rescue. On actual search, rescue, and recovery missions, use the call sign "Air Force Rescue" plus the last five digits of the aircraft tail number.

6.14. Instrument Flight Rules. Conduct flight operations under IFR to the maximum extent possible without unacceptable mission degradation.

6.15. Flight Plan/Data Verification.

6.15.1. Computer Flight Plan (CFP) Use. CFPs are the official sources of performance, navigation, and climatic data, including enroute wind information. If stand-alone computer based plans are used, each mission segment should utilize best wind data available. Use only MAJCOM validated CFPs.

6.15.1.1. Use CFPs to the maximum extent practical. Flight crews may manually compute flight plans. The PIC has final responsibility for flight plan accuracy and diplomatic clearance compliance.

6.15.1.2. Verify CFPs for route of flight and fuel computation accuracy before departure. Pass any flight plan discrepancies to the C2 flight planning office. On flight-managed sorties, promptly notify the flight manager of any flight plan discrepancies, to ensure the correct route of flight is filed with air traffic control. Identify inaccurate CFP winds to 618 AOC/XOCZF if the average wind for a route segment exceeds either 30° error in direction or 25 knots in speed.

6.15.2. All waypoint data retrieved from a database should be verified by one or more of the following methods:

6.15.2.1. Latitude/longitude from current FLIP.

6.15.2.2. Bearing/distance from a flight plan after latitude/longitude are verified for each waypoint.

6.15.2.3. Ground Based NAVAIDs.

6.15.2.4. If an error is discovered in the DAFIF database, immediately report it to your base System Support Representative (SSR). The SSR acts as a filter by determining if the issue is a DAFIF, FMS, or an AWE error and reports it to the appropriate agency. When away from home station, error information may be relayed via OGV or Squadron Stan/Eval by any standard means available (e-mail, satcom, DSN, etc.).

6.15.3. The flight engineer will complete AF IMT 4064, *C-130 Takeoff and Landing Data Card* and AF IMT 4063, *Pilot Information Card*, as specified in **Chapter 12**. Pilots and copilots will use AF IMT 4063. A qualified pilot, or additional flight engineer, will cross-check the AF IMT 4063 for accuracy by using the performance manual or approved tabulated data. As a minimum, the person checking the data will:

6.15.3.1. Verify gross weight independently from the AF IMT 4063.

6.15.3.2. Cross-check air minimum control Vmca (one engine inop in ground effect), takeoff, and landing speeds.

6.15.3.3. Review and compare the computed distances, ground roll, and climb gradient (if applicable) with the actual conditions, runway available, and departure procedures.

6.16. Departure Planning. Use AFI 11-202V3, AFMAN 11-217V1, *Instrument Flight Procedures*, AFMAN 11-217V2, *Visual Flight Rules*, this chapter; and the appropriate MAJCOM supplements. Regardless of the type of departure flown (IFR/VFR), review the

following (as appropriate): IFR Departure Procedure, instrument approach plate, NOTAMS, GDSS Giant Report, and suitable terrain charts. The PIC will provide the obstacle height, distance, and gradient information necessary for performance computations to the flight engineer. All performance data will be computed by the flight engineer and checked by a qualified pilot or another flight engineer using TO 1C-130xx-1-1, T.O. 1C-130xx-1CL-1, or T.O. 1C-130xx-1CL-2.

6.16.1. The order of priority for departure planning is:

6.16.1.1. Aircraft is capable of making published climb restrictions with one engine inoperative,

6.16.1.2. Use of current SDP for planned departure runway for all missions deemed 'operational'

6.16.1.3. Subtract up to 48'/NM from the published climb gradient for OEI,

6.16.1.4. Use of a VFR departure as described in AFI 11-202V3, AFMAN 11-217V1/2, and **paragraph 6.16.2**

6.16.2. VFR Departures. VFR departures will not be flown in lieu of obstacle clearance planning.

6.16.2.1. VFR departures are authorized when there is no authorized IFR departure procedure for the airport, when the aircraft cannot depart using one of the IFR departure methods contained in AFI 11-202V3 and AFMAN 11-217V1, when operational requirements dictate (i.e. tactical necessity), or when most of the mission is planned as a VFR flight for training. VFR departures require detailed planning to ensure obstacles and high terrain are avoided.

6.16.2.2. IAW AFI 11-202V3 and AFMAN 11-217V2 AMC and AMC-gained crews are specifically authorized to depart VFR without meeting IFR departure procedure restrictions along the planned departure route with one engine inoperative while adhering to the following:

6.16.2.2.1. Utilize radar advisory, monitoring, or control services when practical, and ensure flight following by any available means (i.e. FSS or C2).

6.16.2.2.2. Consider reducing aircraft gross weight and/or delaying the mission until environmental conditions improve.

6.16.2.2.3. Crews are responsible for terrain and obstacle planning/avoidance and must climb to the Minimum IFR Altitude as soon as practical.

6.16.2.2.4. Crews will use all available resources to mitigate risk. This includes (but not limited to) supervisors, ORM, aircraft flight manuals, and aircraft commander discretion.

6.16.2.2.5. Operations IAW this authorization are to be used as the last resort when the mission justifies the increased risk.

6.16.2.3. The minimum climb performance for VFR departures is determined by ensuring all the following conditions are met:

6.16.2.3.1. All-engine climb capability ensures obstacle avoidance along the departure route.

6.16.2.3.2. One Engine Inoperative (OEI) climb capability shall ensure departure or emergency return route provides obstacle avoidance.

6.16.2.3.3. If unable to comply with any of the above conditions, download cargo/fuel or delay until conditions that are more favorable exist.

6.16.2.4. Refer to FLIP for host nation VFR requirements before flying VFR outside of CONUS.

6.16.2.5. When departing VFR, maintain VFR cloud clearances until obtaining an IFR clearance or reaching the IFR MEA.

6.16.3. IFR Departures: Aircrews must use an approved IFR departure method as outlined in AFI 11-202V3 and AFMAN 11-217V1.

6.16.3.1. An IFR departure is not authorized at airfields without an instrument approach.

6.16.3.2. IFR departures require detailed planning to ensure obstacles and high terrain are avoided. Adhere to screen height/departure end of runway (DER) requirements for IFR departure planning (AFMAN 11-217V1). ***NOTE:*** Screen height requirements for departures depend on the agency that wrote the departure and/or the airfield where the departure is being flown. There is no standard or easy way for crews to determine screen height requirements. Therefore, when using departures other than those listed below, or when any doubt exists about which screen height to use, plan to cross the DER at 35 feet (minimum) unless you can ascertain a different screen height requirement from an appropriate authority.

6.16.3.2.1. Special Departure Procedure (SDP): Published on SDP.

6.16.3.2.2. At non-joint-use USAF or USN bases, assume a zero foot runway end crossing height unless a higher altitude is published**.**

6.16.3.2.3. All others: 35 feet unless published.

6.16.3.3. Aircraft must meet the published climb gradient for the departure runway with all engines operating. If no minimum climb gradient is published, 200 ft/nm to MSA will be used. ***NOTE:*** In the event the aircraft is unable to meet the published ALL ENGINE climb gradient, download cargo/fuel or delay until more favorable conditions exist.

6.16.3.4. Use one of the following methods to ensure the aircraft can vertically clear all obstacles along the planned departure route with OEI. For the purposes of OEI departure planning, An ‘operational’ mission is defined as all missions that are not designated as training specific missions. A training mission may be considered ‘operational’ if external users (e.g. cargo load training, JA/ATT, etc.) are scheduled as part of the training mission.

6.16.3.4.1. Special Departure Procedure. SDPs are MDS-specific OEI escape procedures intended only for emergency use when operationally necessary. They are applicable after the loss of an engine and, where available, will be used for engine-out departure planning. Retrieve current SDPs from the SDP website (contact OGV for current username password). ‘Ad hoc’ requests for fields not currently listed may be

requested through OGV NLT 48 hrs prior to scheduled departure. MAJCOM/A3V authorizes the use of Ad Hoc SDPs for a maximum of 7 days after the analysis date.

6.16.3.4.2. Minimum climb gradient. The TERPS standard minimum climb gradient is 200 ft/nm, which is based on the standard obstacle clearance surface (OCS) of 152 ft/nm plus the required obstacle clearance (ROC) of 48 ft/nm. If an SDP is not available, the crew must ensure compliance with any obstacle-based minimum climb gradients for the selected departure, with one-engine inoperative. Minimum climb gradients may be published as a 'Trouble T' restriction in the IFR Take-off Minimums section of FLIP or on a SID. When required for mission accomplishment, the operations supervisor (or equivalent mission execution authority supervisor) may authorize the PIC to ensure the aircraft vertically clears all obstacles along the planned departure path OEI by subtracting up to 48'/NM from the published (or standard) climb gradient or the use of the departure runway's SDP for OEI departure planning. For training missions the operations supervisor is the OG/CC or equivalent, delegated no lower than the Sq/DO. As execution authority on all 618 AOC (TACC) tasked missions, the 18 AF/CC has authorized the PIC to subtract the 48'/NM. Minimum climb gradients do not take into account low, close in obstacles (obstacles that require a climb gradient to an altitude of 200' or less above departure end of runway elevation) which should normally be published as a NOTE on the SID or IFR departure procedure (Trouble T). Crews must also ensure the aircraft can clear these obstacles. ***NOTE:*** If OEI obstacle clearance cannot be satisfied by one of the above methods, download cargo/fuel or delay until more favorable conditions exist.

6.16.4. Critical Field Length (CFL). Takeoff GW must never exceed that which would require CFL in excess of the runway available for a normal takeoff. In some cases, a minimum altitude is required at the published screen height.

6.16.5. Gross Weight (GW). Ensure that the aircraft does not exceed the maximum GW, zero fuel weight, or center of gravity limitations specified in the aircraft flight manual. GW may be further restricted by operating conditions such as, icing, temperature, pressure altitude, runway length and slope, aerodrome weight bearing capacity, departure maneuvering, required climb gradients, and obstacles.

6.16.5.1. Takeoff GW must not exceed that which would, in the event of an engine failure, lower the rate of climb to less than a 2.5 percent climb gradient (152-feet per NM).

6.17. Weather Minimums for Takeoff. Use **Table 6.3**.

Table 6.3. Weather Minimums for Takeoff.

MISSION	VIS	REMARKS
Operational	1000 RVR (305 meters)	When less than RVR 1600, but equal to or greater than RVR 1000, the crew may take off if mission priority dictates, provided the runway has dual RVR readouts (touchdown and rollout) and displays (minimum RVR 1000 on both) and runway centerline lighting is operational. For any takeoff below 1600 RVR, the crew must be fully qualified.

All others	1600 RVR (488 Meters)	For runways with more than one operating RVR readout, RVR must read a minimum of 1600 on all.
NOTES: If no RVR readout is available for the departure runway, visibility must be reported to be 1/2 mile (800 meters). When weather is below approach and landing minimums (ceiling or visibility) a departure alternate is required (See **paragraph 6.19.**)		

6.18. Alternate Planning. Select alternate airports meeting the requirements of AFI 11-202V3. Choose alternates that best meet mission requirements and conserve fuel; they should not be within the same terminal area, if terminal forecasts are marginal. Select alternates that are not restricted by FLIP, DOD 4500.54G FCG, or diplomatic clearances, and are compatible with the mission load and performance characteristics of the aircraft. The PIC retains final authority in the choice of alternates; however, selection by support agencies normally should be used if they meet the above criteria and the aircraft has already been serviced.

6.19. Departure Alternates.

6.19.1. A departure alternate is required if weather is below landing minimums for lowest suitable approach (at departure aerodrome). If planning an ILS approach, Category I minimums will be used.

6.19.2. Suitability of Departure Alternates. When a departure alternate is required, the aircraft must be capable of maintaining the MEA or minimum obstruction clearance altitude (MOCA), whichever is higher, to the alternate using OEI performance criteria. To qualify as a departure alternate, the airfield must meet one of the following conditions:

6.19.2.1. For an alternate within 30 minutes flying time, the existing weather must be equal to or better than the published approach minimums and forecast to remain so until 1 hour after takeoff, but in no case forecast to be lower than 200-1/2 (RVR 2400), or;

6.19.2.2. For an alternate within two hours flying time, the existing weather must be at least 500-1 above the lowest compatible published approach minimums, but not less than 600-2 for a precision approach or 800-2 for a non-precision approach, and forecast to remain so for 1 hour after ETA at the alternate.

6.20. Destination Requirements (*for filing purposes*). The forecast destination weather will be according to AFI 11-202V3 and the following:

6.20.1. File two alternates when:

6.20.1.1. The forecast visibility (intermittent or prevailing) is less than published for the available DOD or National Aeronautical Charting Office (NACO) precision approach;

6.20.1.2. The forecast ceiling OR visibility (intermittent or prevailing) is less than published for all other approaches. For approaches with no published ceiling requirement (for example Jeppesen approaches), the minimum required ceiling shall be computed by taking the published HAA or HATh and rounding it up to the nearest one hundred feet (or

as determined by MAJCOM TERPs review). For example, a Jeppesen VOR approach with a published HAA of 642 feet would require a forecasted ceiling of 700 feet;

6.20.1.3. The forecast surface winds (intermittent or prevailing) exceed limits corrected for RCR.

6.20.2. File an alternate, regardless of forecast weather, when the departure or destination aerodrome is outside the CONUS. ***EXCEPTION***: OCONUS, intra-theater flights that do not exceed 3-hours, comply with basic AFI 11-202V3.

6.20.3. A remote or island destination is defined as any aerodrome, which due to its unique geographic location, offers no suitable alternate (civil or military) within 2 hours flying time. The forecast weather at the remote or island destination must meet the following criteria:

6.20.3.1. The prevailing surface winds, corrected for RCR, must be within limits at ETA and forecast to remain so for 2 hours thereafter, and

6.20.3.2. The prevailing ceiling and visibility must be equal to or greater than published minimums for an available non-precision approach, for ETA plus 2 hours. However, if a precision approach is available, the ceiling or visibility may be intermittently below non-precision approach minimums (excluding ASR), but not below precision approach minimums (for ETA plus 2 hours). ***NOTE:*** See Chapter 14 for fuel planning considerations to a remote or island destination.

6.21. Adverse Weather.

6.21.1. Turbulence. Flight into areas of forecast or reported severe turbulence is prohibited.

6.21.1.1. Do not fly into an area of known or forecast moderate or greater mountain wave turbulence. Refer to AFI 11-203, *Weather for Aircrews*, for additional information on mountain wave turbulence.

6.21.1.2. The C-130 is a category II aircraft for turbulence. AF produced turbulence products are based upon category II aircraft. If referencing other products or reports, crews should confirm the type of aircraft the forecast turbulence applies to, or what type of aircraft reported the encounter, to gain a more accurate picture for their route of flight. Turbulence category charts are found in Air Force Weather Agency technical note AFWA/TN 98/002, *Meteorological Techniques*.

6.21.1.3. The PIC is responsible for ensuring all passengers are seated, with seat belts fastened, when areas of moderate or greater turbulence are encountered or anticipated. ***WARNING:*** Serious injury may occur if passengers do not have their seat belts fastened and the aircraft encounters moderate or severe turbulence.

6.21.2. Icing. Flight into areas of forecast or reported severe icing is prohibited. Prolonged operation, such as cruise flight or holding, in areas of moderate icing should be avoided. ***NOTE:*** Air Force Weather Agency technical note AFWA/TN 98/002 states that freezing drizzle is equivalent to moderate icing and freezing rain is equivalent to severe icing. When freezing fog is forecast or reported, aircrews will confirm with weather agencies what type (if any) icing is associated with the freezing fog.

6.21.2.1. Do not takeoff under conditions of freezing rain. Do not takeoff under conditions of freezing drizzle except when aircraft has been properly de-iced/anti-iced IAW flight manual procedures.

6.21.2.2. Freezing precipitation, snow, freezing fog, or temperatures near 0°C, may cause ice or frost to accumulate on aircraft surfaces. When an aircraft requires de-icing/anti-icing prior to takeoff, refer to the following:

6.21.2.2.1. Aircrews will only use de-ice and anti-ice fluids listed in their respective flight manual. Aircrews will be familiar with, and follow all restrictions in their associated flight manual with respect to anti-ice/de-ice procedures and holdover times.

6.21.2.2.2. MIL-A-8243 Type I and Type II de-icing fluids do not provide any anti-icing benefit, and therefore do not have holdover times. Information on the removal and prevention of frozen precipitation is contained in AF T.O. 42C-1-2, *Anti-Icing, De-Icing and Defrosting of Parked Aircraft* available at **https://afkm.wpafb.af.mil/a3of.** Approved annual deicing/anti-icing holdover tables are available at the AFFSA/A3OT website: **https://afkm.wpafb.af.mil/a3of.** The holdover time begins when anti-icing fluid is first applied and the PIC shall use time, temperature, and dilution of mixture to determine when times are exceeded and re-apply fluid if required.

6.21.2.2.3. Ice Pellets. Tests have shown that ice pellets generally remain in the frozen state imbedded in Type IV anti-icing fluid, and are not absorbed by the fluid in the same manner as other forms of precipitation. Using current guidelines for determining anti-icing fluid failure, the presence of a contaminant not absorbed by the fluid (remaining imbedded) would be an indication that the fluid has failed. These imbedded ice pellets are generally not readily detectable by the human eye during pre-takeoff contamination check procedures. Therefore, strict adherence to ice pellet allowance times is required. Approved Ice Pellet Allowance Times are available at the HQ AFFSA/A3OF website: **https://afkm.wpafb.af.mil/a3of**.

6.21.2.2.4. In all cases, PICs will ensure a visual inspection of the aircraft is completed within 5 minutes of departure.

6.21.3. Thunderstorms.

6.21.3.1. Aircrews should avoid flying in areas of recently dissipated thunderstorms and advected clouds (horizontal movement of clouds caused by wind) downwind of thunderstorms. Do not fly directly above (within 2,000 feet) thunderstorms or cumulonimbus clouds. If unable to vertically clear thunderstorms or cumulonimbus clouds by at least 2000 feet, avoid them by at least:

6.21.3.1.1. 20 NMs at or above flight level FL 230.

6.21.3.1.2. 10 NMs below FL230.

6.21.3.1.3. 5 NMs for tactical low-level operations below FL230 provided the outside air temperature is at or above 0°C at flight altitude. Avoid gust fronts and winds preceding a rapidly moving thunderstorm.

6.21.3.1.4. **CAUTION:** Aircraft damage may occur up to 20NMs from any thunderstorms. Aircrews must familiarize themselves with information on thunderstorm development and hazards. Refer to AFH 11-203, *Weather for Aircrews*.

6.21.3.2. The use of ground-based radar as a means of thunderstorm avoidance should only be used to assist in departing an inadvertently penetrated area of significant weather. It will never be considered a normal avoidance procedure. When relying exclusively on ground-based radar for weather avoidance, and the ground controller is unable to provide avoidance instructions, attempt to maintain VMC by:

6.21.3.2.1. Changing routing.

6.21.3.2.2. Diverting to alternate.

6.21.3.2.3. Declaring an emergency and requesting priority assistance.

6.21.3.3. In order to minimize exposure to thunderstorm hazards when approaching or departing an airport in an area where thunderstorms are occurring or are forecast:

6.21.3.3.1. Attempt to maintain VMC.

6.21.3.3.2. Maintain at least 5NMs separation from heavy rain showers

6.21.3.3.3. Avoid areas of high lightning potential, i.e., clouds within plus or minus 5,000 feet of the freezing level or plus or minus 8°C of the freezing level.

6.21.3.3.4. Approaches or departures may be accomplished when thunderstorms are within 10NMs providing they are not producing any hazardous conditions (such as hail, lightning, strong winds, gusts fronts, heavy rain, wind shear, or microburst) at the airport, and are not forecast or observed to be moving in the direction of the route of flight (to include the planned missed approach corridor, if applicable).

6.21.4. Lightning Avoidance. The following conditions are most conducive to lightning strikes and prolonged flight in them should be avoided:

6.21.4.1. Within 8C of freezing.

6.21.4.2. In clouds or in any intensity of precipitation or turbulence associated with thunderstorm activity.

6.21.5. Significant Meteorological Information (SIGMET). National Weather Service in-flight weather advisories are not limiting to Air Force aircraft. Contact the nearest military weather facility or flight service station for details, if applicable.

6.21.6. Temperature Corrections. Refer to AFI 11-202V3 and the Flight Information Handbook (FIH) Section D for temperature corrections.

6.21.7. Volcanic Dust Precautions. Aircraft flight operations in areas of forecast or known volcanic activity or dust is prohibited. Plan all missions to avoid volcanic activity by at least 20 NMs.

6.22. Operational Risk Management (ORM). ORM is a logic based, common sense approach to making calculated decisions on human, material, and environmental factors before, during, and after all operations. USAF policy on ORM is contained in AFPD 90-9, *Operational Risk*

Management. PICs will accomplish ORM worksheets IAW MAJCOM and local guidance as part of preflight activities.

6.22.1. Flying units will develop a local ORM program to include personal ORM assessment for all missions and accomplished by all crewmembers prior to each flight.

6.22.1. **(911AW)** ORM. The 758 AS/CC and 911 AES/CC will promote unit level ORM programs that assess the risks associated with daily duty and non-duty related activities. The PIC/MCD will ensure that the ORM worksheet remains with the finalized flight authorization on file at home station. The unit will maintain ORM worksheets in accordance to AMCI90-903.

6.22.1.1. **(Added-911AW)** The PIC will ensure the 911 AW Mission Setup and ORM worksheet are completed prior to all non-AMC missions. Each crewmember will assess individual human factors and annotate ORM score on the ORM worksheet. PICs will use this information in conjunction with the 911 AW Mission Analysis Worksheet to assess overall mission risk.

6.22.1.2. **(Added-911AW)** Aircrews flying AMC missions will complete the AMC Aviation ORM worksheet prior to takeoff for all flight duty periods. The AMC ORM worksheet should be part of your mission package. The AMC ORM worksheet is a 4 Tier system. Each Tier evaluates risk factors for each flight, scores known items in their column and takes all appropriate abatement actions. The AMC Aviation ORM worksheet will originate at the planning level (Tier 1) and down the supervisory chain to the crew. In some circumstances not all Tiers are accomplished. At a minimum Aircrew (Tier 4) must be completed prior to departure. Success of the ORM program requires participation by all Tiers applicable to the mission.

Section 6C—Preflight

6.23. Hazard Identification and Mitigation. After the entire crew is assembled at the aircraft, the PIC will brief primary mission hazards facing the crew during takeoff and climb-out.

6.24. AFTO Forms 781 Series.

6.24.1. Review AFTO Forms 781 series before applying power to the aircraft or operating aircraft systems. An exceptional/conditional release must be signed before flight. A maintenance officer, maintenance superintendent, or authorized civilian normally signs the exceptional/conditional release. If one of these individuals is not available, the PIC may sign the exceptional/conditional release. Ensure that the DD1896, *DOD Fuel Identaplate***,** and AIR card are aboard the aircraft.

6.24.2. One-Time Flights. An aircraft may be released for a one-time flight with a condition that might be hazardous for continued use, provided the aircraft is airworthy for one flight to another station. Refer to T.O. 00-20-1, *Aerospace Equipment Maintenance Inspection, Documentation, Policies, and Procedures,* for downgrade authority and procedures. AFRC crews also see AFI 11-202V3/AFRCSUP1. After the maintenance release is obtained, coordinate mission requirements with the controlling agency. The PIC's concurrence is required before the aircraft can be flown.

6.24.3. For Red X clearing procedures at stations without maintenance support refer to **paragraph 12.3**.

6.25. Aircraft Servicing and Ground Operations.

6.25.1. APU Usage. For fuel conservation, minimize use of APU. Use ground power units when practical.

6.25.2. Aircraft Refueling. Aircrew members qualified in ground refueling may perform refueling duties. Flight engineers acting as refueling supervisors and panel operators will comply with T.O. 00-25-172 and refueling job guide. Aircrews will only refuel in cases when maintenance support is not readily available and the mission would be delayed. Crewmembers may augment maintenance refueling teams at enroute stops.

6.25.2.1. Units will not refuel to a “standard” ramp load. The aircraft will be refueled after the aircraft tail number is assigned and the exact mission-specific fuel requirement is known. The goal is to provide an accurate fuel requirement before refueling begins to prevent defueling or having a second refueling.

6.25.3. Aircrew Dash One Preflight Inspection Requirements.

6.25.3.1. The aircrew dash one preflight inspection will remain valid until either:

6.25.3.1.1. Aircraft ground time exceeds 12 hours (72 hours provided the aircraft is sealed, not flown, and documented entry control is maintained).

6.25.3.1.2. Another maintenance dash six preflight is performed.

6.25.3.2. When an aircrew assumes a preflighted spare or an aircraft not requiring a preflight, a thorough visual inspection will be performed.

6.25.3.2.1. Same day, as referenced from TO 1C-130XX-1, is defined as the time period from 0001 to 2359 local.

6.25.4. Fire Protection and Crash Rescue.

6.25.4.1. The aircraft engine fire extinguisher system fulfills the minimum requirements for fire protection during engine start.

6.25.4.2. A fireguard is required for all engine starts including the GTC/APU. A crewmember or ground controller may act as fireguard.

6.25.5. Aircrew and Maintenance Engine Runs.

6.25.5.1. A mixture of aircrew and maintenance personnel will not normally accomplish engine runs. When an aircrew member is required to start or run up engines for maintenance purposes, the following procedures apply:

6.25.5.1.1. Maintenance personnel will accomplish all necessary inspections and preparations for the engine run. These actions include but are not limited to: intake/exhaust inspections, access panel security servicing, and AFTO Form 781 documentation.

6.25.5.1.2. Use the pilot, flight engineer, and loadmaster checklists. Begin with the "cockpit checklist," and complete all appropriate checklists through the "before leaving the airplane" checklist.

6.25.5.1.3. Only deviate from the flight crew checklist when maintenance requires less than four engines to be started.

6.25.5.1.4. Operate symmetrical engines when power settings above ground idle are required.

6.25.6. Towing. Aircrew members normally will not participate in towing operations. If required to occupy cockpit positions during towing operations conducted by personnel not familiar with C-130 towing procedures, the PIC will coordinate with the senior maintenance officer or superintendent to ensure the towing supervisor and crew are qualified. At non-USAF installations, the PIC must have approval from the airfield operations officer or manager prior to towing. The PIC will ensure the tow team supervisor briefs all personnel on their duties and the associated hazards. Proper checklists will be used. If any doubt exists as to the qualification of tow team personnel or the safety of the operation, make no attempt to tow the aircraft until qualified Air Force personnel can be located. Under no circumstances will any crewmember act as the towing supervisor.

6.25.7. Aircrew members are prohibited from climbing onto the upper fuselage or wing surfaces unless there is an operational necessity. When operational conditions dictate that aircrew members must climb onto upper fuselage or wing surfaces, they will do so only when conditions are dry and high winds do not exist.

6.25.7.1. Aircraft commanders will ensure no other personnel (excluding qualified ops/maintenance personnel) have access to, or be allowed to, climb onto the fuselage or wings.

6.26. Aircraft Recovery Away from Main Operating Base (MOB). Refer to **Chapter 12** for procedures.

6.27. Aircrew Flight Equipment Requirements.

6.27.1. Oxygen. Oxygen on board for takeoff must be sufficient to accomplish the planned flight from the equal time point (ETP) should oxygen be required (minimum 5 liters).

6.27.1.1. Since the C-130 flight deck can accommodate more crewmembers than there are oxygen regulators, all C-130 aircraft will have three emergency passenger oxygen systems (EPOS), or protective breathing equipment (PBE) permanently pre-positioned on the aircraft. The EPOS/PBEs may be stored on the overhead storage rack when not required on the flight deck.

6.27.1.2. On missions carrying passengers/patients, one EPOS per passenger/patient will be available regardless of planned flight altitude. EPOS will be distributed or placed throughout the cabin/cargo area IAW AFI 11-2C-130V3 Addenda A.

6.27.1.3. Do not remove the loadmaster's emergency equipment (cargo compartment quick dons/smoke masks) for use by flight deck crewmembers.

6.27.1.4. Aircrew members will comply with the oxygen requirements in AFI 11-202V3.

6.27.1.5. Crewmembers occupying a crew station will have an oxygen mask with communication connected and readily available for use from before engine start until engine shutdown.

6.27.1.6. Crewmembers that do not have access to the aircraft oxygen system will have an EPOS or PBE within arm's reach for flights above 10,000 feet.

6.27.1.7. Normally, unpressurized flight will not be planned above 20,000 feet cabin altitude (except certain airdrop missions). Aircrews required to fly unpressurized missions above 20,000 will pre-breathe 100 percent oxygen in accordance with **Chapter 19**.

6.27.2. Rafts. On overwater flights do not carry more passengers and crewmembers than wing well life rafts will accommodate.

6.27.3. Life preserver units (LPUs) or Personal Floatation Device. LPUs will be placed within easy reach of each passenger and aircrew member before takeoff on overwater flights. Crewmembers will fit and adjust LPUs (if applicable) for overwater flights and will wear them on overwater missions below 2,000 feet. (***EXCEPTION***: LPUs need not be worn for takeoffs, landings, or approaches). Ensure the appropriate number and type of life preservers are aboard for overwater missions carrying children and infants.

6.27.4. Parachutes:

6.27.4.1. Personnel performing duties near an open (or suspected open) door/hatch/ramp in-flight will be restrained by a safety harness, or wear a parachute.

6.27.4.2. Either wear, or have prefit and prepositioned, parachutes and helmets during specified combat conditions IAW AFI 11-2C-130V3 Addenda A. Loadmasters will wear a restraining harness instead of a parachute during airdrops below 800 feet AGL or when performing duties near an open exit above 25,000 MSL.

6.27.5. MA-1 Portable Oxygen Bottles.

6.27.5.1. There are three types of A-21 regulators on MA-1 portable oxygen bottles, unmodified, modified and modified2. Except for fill times, operation of the bottles are identical. Refill valve type is determined by viewing the inside of the fill nozzle and/or identaplate as specified below:

6.27.5.1.1. Unmodified: Refill valves have a push valve inside the nozzle resembling a standard tire valve stem.

6.27.5.1.2. Modified: Refill valves have a brass plate/filter covering inside of the nozzle and no valve stem is visible.

6.27.5.1.3. Modified2 (Fast Fill): Refill valves have a brass plate/filter covering inside of the nozzle and no valve stem is visible. Part number on the identaplate is one of the following: 9010A4, 9010A5, 3260007-0201, 3260007-0103.

6.27.5.2. Ensure a minimum of two unmodified/modified2 bottles are installed on the aircraft, one in the cargo compartment and the other in the pilot position. Additional unmodified/modified2 bottles should be installed in the cargo compartment first.

6.27.5.2.1. Home Station Departures. A waiver to the minimum number of required unmodified/modified2 bottles may be granted on a case-by-case basis. (see **paragraph 4.3**)

6.27.5.2.2. Enroute Departures. Maintain minimum number of unmodified/modified2. If unable, continue until reaching a location with replacement bottle(s).

6.28. Fleet Service. Ensure the required fleet service items are aboard the aircraft early enough to permit inventory prior to engine start.

6.29. Cargo Documentation. Proper cargo or mail documentation will accompany each load.

6.29.1. Load Data Information (Applicable to AFRC/ANG completing 618 AOC (TACC) directed mission). At stations where there is no mobility air transportation function, the aircrew will collect the required load information on each leg, and submit it to the first station, which has such a function. The report will be submitted on AF Form 4075, *Aircraft Load Data Worksheet*.

6.30. Airlifting Hazardous Cargo. ***NOTE*:** Installed flares do not constitute hazardous cargo. However, any additional loads of flares are not considered aircraft equipment and shall be properly packaged and prepared IAW AFMAN 24-204/TM 38-250/NAVSUP PUB 505/MCO P4030.19I/DLAI 4145.3.

6.30.1. AFMAN 24-204/TM 38-250/NAVSUP PUB 505/MCO P4030.19I/DLAI 4145.3 contains a description of the types and classes of hazardous cargo that may be carried. PICs on AMC and AMC-gained aircraft are responsible for ensuring that all procedures contained in AFMAN 24-204/TM 38-250/NAVSUP PUB 505/MCO P4030.19I/DLAI 4145.3 are complied with when airlifting hazardous cargo.

6.30.1.1. MAJCOM Instructions (i.e. AMCH 11-214, AMC Aircrew Hazardous Materials) may be provided to crew members in order to consolidate and streamline the information from several hazardous material regulations. This does not preclude aircrew from the responsibility of the parent regulation.

6.30.1.2. Procedures also apply to nuclear related cargo, toxic chemical ammunition, highly toxic substances, hazard division 1.1 through 1.3 explosives, and infectious substances (including biological and etiological materials). In addition, it applies to Class 7 (Radioactive materials), which require a yellow III Label, and all other hazard classes or divisions, (except class 9 and other regulated material (ORM-D)) when shipped in quantities of 1,000 pounds (455 Kgs) or more aggregate weight.

6.30.2. Flight Planning. Based on the Hazardous Cargo Briefing, the PIC will:

6.30.2.1. Enter "Hazardous Cargo" and the mission identifier or flight number in the appropriate section of the flight plan. Use *Remarks* section of DD 175, *Military Flight Plan*, and *Other Information* section of DD 1801, *International Flight Plan, DOD*. Refer to the DOD 4500.54G FCG for country specific requirements concerning over-flight when transporting hazardous materials cargo.

6.30.2.2. If possible, plan the flight to minimize overflying heavily populated or otherwise critical areas. Approach, landing, and takeoff tracks are excluded.

6.30.2.3. Prepare a departure message at stations when a C2 center is not available. The remarks section of the departure message will include: Class of hazardous material, DOD class or division for explosives, net explosive weight (NEW), and gross weight. If

required, request special handling (e.g., isolated parking, security, technical escort teams, etc.).

6.30.2.4. If estimated time enroute (ETE) is less than 1 hour, or if other circumstances preclude timely message receipt at destination, notify the next destination of the ETA and information listed in **paragraph 6.30.2.3**. If available, C2 will relay required information to next destination.

6.31. Handling of Classified Cargo, Registered Mail, Mission Capable (MICAP) Parts, Very, Very Important Part (VVIP), Forward Supply System (FSS) Shipments, and Courier Material.

6.31.1. MICAP, VVIP, sensitive cargo, courier materials, and registered mail moving within the normal airlift system are receipted at the on and offload stations using the air cargo manifest. For unit moves operated IAW DOD 4500.9-R, *Defense Transportation Regulation Part III, Mobility*, July 2011, authorized by DOD Directive 5158.04, July 27, 2007, classified or sensitive cargo movement is normally manifested utilizing the DD Form 2130-2, *C-130E/H Cargo Manifest* or similar automated product, and will normally be accompanied by a unit courier. However, if classified/sensitive unit cargo is offered without an accompanying courier, the DD1907, *Signature and Tally Record***,** must be used.

6.31.1.1. Defense Courier Service (DCS) couriers coordinating with the PIC are authorized to designate officer or enlisted, (E-5 and above) crewmembers on military aircraft as couriers to escort and safeguard courier material when other qualified personnel are not available. Qualified passengers, if carried, are designated before designating crewmembers. The following restrictions apply:

6.31.1.1.1. Primary crewmembers will not be designated couriers without the consent of the PIC.

6.31.1.1.2. Crewmembers on aircraft scheduled to make an extended enroute stop at a location where DCS couriers cannot provide enroute support will not be designated as couriers.

6.31.2. During stops at enroute locations supported by DCS stations, DCS couriers are required to meet designated couriers, guard and protect the material.

6.31.2.1. During unscheduled enroute stops crewmembers may place courier material in temporary custody of the following agencies in descending order of priority.

6.31.2.1.1. DCS courier.

6.31.2.1.2. TOP SECRET control officer of the US armed forces.

6.31.2.1.3. US Department of State Diplomatic Courier.

6.31.2.1.4. US Department of State activity.

6.31.2.1.5. US military guards.

6.31.2.1.6. US DOD civilian guards.

6.31.3. If unable to follow the itinerary to the destination of the courier material, or material is lost, stolen or otherwise compromised, report circumstances to the nearest Defense Courier Station and notify the local US military commander or US Government activity.

6.31.4. Life or death urgency shipments consist of biological or other medical supplies of such urgency that human life is dependent upon immediate receipt. Shipments will be manifested separately and the manifest annotated with the words LIFE OR DEATH URGENCY. All shipments will be handled on a hand-to-hand receipt basis, using either the air cargo manifest or the DD 1907, for unit moves. The PIC, or designated representative, will be briefed on the urgency of the shipment and be made the custodian during flight.

Section 6D—Departure

6.32. On Time Takeoffs. Mission departures are on time if the aircraft is airborne within -20/+14 minutes of scheduled takeoff time or as specified in a MAJCOM supplement.

6.32.1. Scheduled takeoff time may be adjusted to make good a time over target (TOT) or time of arrival (TOA). PICs shall notify C2 agency before takeoff to adjust the scheduled takeoff time.

6.32.2. Early Departures. Early departures are authorized to prevent a delay due to weather, ATC restrictions, airfield or aircraft operational limitations, to adjust mission flow during a large-scale operation, or if approved through C2 channels provided the impact on local and downrange facilities and crew duty is evaluated.

6.33. NVG Departures.

6.33.1. NVG Departure Weather Minimums. Weather minimums for NVG departures for crewmembers who are non-current and/or unqualified is 1500/3. Weather minimums for NVG departures for current and qualified aircrews are no different than normal takeoffs.

6.33.2. NVG Malfunctions During Takeoff. During an NVG takeoff, if the PF experiences NVG failure, the takeoff may be continued at the discretion of the PIC. The PM will be ready to immediately assume aircraft control if the PF experiences spatial disorientation or an NVG malfunction. See AFTTP 3-3.C-130E/H for additional NVG emergency information.

Section 6E—Enroute

6.34. Flight Progress. In-flight, use all available navigational aids to monitor SCNS/GPS/INS performance. Immediately report malfunctions or any loss of navigation capability that degrades centerline accuracy to the controlling ARTCC. Use the following procedures for flight progress:

6.34.1. Before an oceanic flight, plot the oceanic portion on an appropriate chart. Annotate the chart with the mission number and date. If practical, charts may be reused. Refer to **Chapter 11** for chart requirements.

6.34.1.1. Crews are to use only the MNPS oceanic checklist and the oceanic expanded checklist for oceanic crossings. Use of all locally generated oceanic checklists is prohibited. Where appropriate, units may augment the MNPS checklist with local supplements for items such as ATLRV, formation, and other unique mission requirements, but in no case may they substitute locally generated products for the MNPS checklist. The MNPS checklists is located at: **https://www.notams.jcs.mil/dinsQueryWeb**/ on the right side.

6.34.2. Another pilot or navigator will verify waypoint data inserted into the SCNS/INS. Check both the coordinate information and the distances between waypoints against the flight plan.

6.34.3. Category I Routes.

6.34.3.1. When approaching each waypoint on a Category I route, the PM will recheck coordinates for the next two waypoints.

6.34.3.2. Navigators will use the procedures in **Chapter 11** for flight following.

6.34.4. Upon return to home station, turn in the charts (copies if reused) and applicable computer flight plans to the squadron. Squadrons will retain the charts, computer flight plans, and associated materials for a minimum of 3 months.

6.34.5. See **Chapter 11** for more enroute navigation procedures.

6.35. In-Flight Meals. Pilots should not eat meals at the same time, and their meals should consist of different menu items.

6.36. Communications Instructions Reporting Vital Intelligence Sightings (CIRVIS) and Other Reports. Report all vital intelligence sightings from aircraft as indicated in FLIP planning or FLIP Enroute Supplement.

6.36.1. In-flight harassment or hostile action against aircraft. Aircraft subjected to harassment or hostile action by foreign aircraft will immediately contact the nearest USAF air and ground voice facility and report the encounter. Include aircraft nationality, type, insignia, or any other identifying features; note position, heading, time, speed when harassed, and the type of harassment. Request relay of the report to the nearest C2 agency. Also, attempt to contact the nearest command post when in UHF and VHF range.

6.36.2. Other incidents will be reported as indicated in AFI10-206, *Operational Reporting.*

6.37. Communications.

6.37.1. Crews will conduct an HF radio ground check before takeoff if use of the HF radio may be required for ATC or C2 communications. Attempt to establish HF contact before going out of UHF/VHF range. If unable to establish HF contact with the controlling HF station, and an alternate means of relay of ATC information is not available, the aircraft should return to the nearest suitable support base. In the case of airborne HF failure, crews are authorized to continue under the following conditions:

6.37.1.1. If SATCOM-equipped.

6.37.1.1.1. Use Satellite Voice Communications to contact responsible station via special telephone numbers/short codes published in State AIPs (Aeronautical Information Publication).

6.37.1.2. If not SATCOM-equipped.

6.37.1.2.1. Attempt to contact ATC facility on VHF.

6.37.1.2.2. Attempt VHF relay via another aircraft on 123.45 MHz.

6.37.2. Pilots shall provide ARTCC position and weather observations when required. If unable to contact an ATC agency, attempt to relay through the GLOBAL HF stations.

6.38. In-Flight Emergency Procedures. The PIC shall report deviations from directives that may occur as a result of an emergency according to AFI 11-202V3. Time and conditions permitting, inform passengers of the situation and intentions.

6.38.1. Notification of Control Agencies. When practical after completing the aircraft emergency action checklists and associated actions, the PIC shall furnish ATC and appropriate C2 agencies with a description of the difficulty, assistance required, intentions, and any other pertinent information.

6.38.2. The PIC may initiate a CONFERENCE HOTEL when additional expertise is necessary. Communications procedures are as follow:

6.38.2.1. Local Area. Use appropriate UHF or VHF frequencies.

6.38.2.2. Enroute. Attempt to establish a phone patch with the nearest or controlling C2 Center using global HF network, UHF/VHF stations, SATCOM, etc. If unable, aircrews are permitted to use ARINC radio service as an additional avenue for phone patch connectivity.

6.38.2.3. Provide the following information when time permits:

6.38.2.3.1. Description of the situation to include actions taken and intentions.

6.38.2.3.2. What assistance is being requested.

6.38.2.3.3. Fuel on board and hours of endurance.

6.38.2.3.4. Position.

6.38.2.3.5. Altitude and flight conditions.

6.38.2.3.6. Number of personnel and DVs on board.

6.38.2.3.7. Qualification of PIC.

6.38.2.3.8. Planned landing destination and ETA.

6.39. Need for Medical Assistance. When a person aboard the aircraft requires medical care, the PIC will notify the station of intended landing in sufficient time so the aircraft may be met by medical personnel. Notification will include the patient's sex, approximate age, and major complaint.

6.40. Weather Forecasts. It is the pilot's responsibility to obtain destination weather prior to descent. The primary sources are 618 AOC (TACC) weather operations, OWSs, and USAF weather flights via pilot-to-meteorologist service (PMSV) or through a USAF aeronautical station. For aircraft flying in EUCOM AOR (ENAME operations) contact USAFE/OWS at Sembach AB GE. SOUTHCOM AOR contact 612 SPTS/WX at Davis-Monthan AFB, AZ. PACOM AOR contact 17 OWS at Joint Base Pearl Harbor-Hickam, HI. The ATC system can provide weather information to enroute aircraft.

Section 6F—Arrival

6.41. Descent. Prior to the top of descent (TOD), the PIC will identify and discuss mitigation of associated hazards to the penetration, approach, landing, and airfield. Before descent into unfamiliar areas, pilots and navigators will review appropriate terrain charts to increase aircrew

situational awareness of obstructions. Every effort will be made to accomplish briefings and appropriate checklists prior to TOD. Primary crewmembers will not be involved in duties other than aircraft operations, descent and approach monitoring, and required checklist items from the initial descent point to landing.

6.41.1. Night and Marginal Weather Operations. Fly a precision approach, if available, at night or during marginal weather. If a precision approach is not available, fly any available approved instrument approach. A visual approach may be flown during night VFR conditions if an approved instrument approach to the landing runway is not available or operational missions require a tactical approach.

6.41.1.1. On training/evaluation flights, pilots may fly non-precision approaches or VFR traffic patterns to accomplish required training and evaluations. The pilot not flying will monitor a precision approach when practical to enhance safety.

6.41.1.2. For recovery at home station, pilots may elect to fly a visual or non-precision approach, if weather minimums permit.

6.42. Instrument Approach Procedures.

6.42.1. Aircraft category. The C-130 is a category "C" aircraft. If approach speeds exceed 140 knots, the minimums for category "D" will be used.

6.42.2. Prior to starting an instrument approach, pilots will confirm their aircraft can comply with the missed approach climb gradient requirements established in AFI 11-202V3.

6.42.3. Weather minimums. Before starting an instrument approach, or beginning an enroute descent, pilots will confirm the existing weather is reported to be:

6.42.3.1. At or above required visibility for straight-in or sidestep approaches.

6.42.3.1.1. For PAR approaches, visibility will be no lower than RVR 2400 (730 meters) or 1/2 mile visibility (800 meters) with no RVR readout available.

6.42.3.2. At or above required ceiling and visibility for circling approaches.

6.42.3.2.1. For circling approaches with no published ceiling requirement, the required ceiling shall be computed by taking the published HAA plus 100 feet rounded up to the next one hundred foot value. (For example, if the HAA is 747 feet, add 100 feet to get 847 feet and then round up to the next one hundred foot value which would be 900 feet. Your ceiling for the approach must be at or above 900 feet.) When circling minimums are published, but not by category, circling approach minimums will be as published, but in no case lower than 600 feet and 2 miles visibility.

6.42.3.3. Increase the published visibility minimums of an instrument approach by ½ SM or as noted in NOTAMs, on ATIS, or on the approach plate, when the runway approach lighting system (ALS) is inoperative. (This applies only to the ALS itself, not to VASIs, PAPIs, and other lights that are not a component of the ALS.)

6.42.3.4. Variable visibility/ceiling reports. If variable visibilities/ceilings are reported, pilots may use the greatest value reported. If it is subsequently determined that weather is below minimums for the approach, comply with **paragraph 6.42.10**. Do not attempt

further approaches until the lowest visibility/ceiling reported is at/above approach minimums.

6.42.4. Flight Instrumentation Requirements.

6.42.4.1. If full flight instrumentation is not available and operational, aircraft are limited to a DA/MDA based on a HATh (height above threshold) of 300 feet and RVR 4000, or ¾ mile visibility (1220 meters) with no RVR.

6.42.4.1.1. Category I ILS. Full flight instrumentation consists of: dual flight displays (one flight director plus ADI repeat), complete differential pressure instruments, heading/compass systems, and attitude indicators in the pilot and copilot positions.

6.42.4.1.2. Full flight instrumentation for a precision approach radar (PAR) consists of: complete differential pressure instruments, heading/compass systems, and attitude indicators in the pilot and copilot positions.

6.42.5. Category I ILS Procedures. Decision altitude for precision approaches will be as published, but no lower than 200 feet HATh.

6.42.5.1. ILS Precision Runway Monitor (PRM) Approaches. Both pilots must be certified to conduct an ILS PRM approach. Comply with the following operational procedures:

6.42.5.1.1. Two operational VHF communication radios are required.

6.42.5.1.2. The approach must be briefed as an ILS/PRM approach.

6.42.5.1.3. If unable to accept an ILS PRM approach clearance, contact the FAA ATCSCC at 1-800-333-4286 prior to departure time to obtain a pre-coordinated arrival time. Pilots who arrive at a PRM airport unable to accept PRM approach clearance, who did not contact ATC prior to departure, should expect an ATC directed divert to a non-PRM airport.

6.42.5.1.4. All breakouts from the approach shall be hand flown. Autopilots shall be disengaged when a breakout is directed.

6.42.5.1.5. Should a TCAS Resolution Advisory (RA) be received, the pilot shall immediately respond to the RA. If following an RA requires deviating from an ATC clearance, the pilot shall advise ATC as soon as practical. While following an RA, comply with the turn portion of the ATC breakout instruction unless the pilot determines safety to be a factor.

6.42.6. Aircrews are not authorized to fly RNAV(RNP), RNAV, RNAV (GPS); GPS; or "OR GPS" approaches until aircraft equipment is certified, aircrews are trained, and MAJCOM/A3 has issued operational approval.

6.42.7. NDB Procedures. NDB approaches may be flown during day, night, or IMC conditions after compliance with any airfield restrictions in GDSS and the ASRR. Back up each approach with available navaids/GPS to include loading the NDB coordinates in SCNS.

6.42.8. After Beginning Descent or Approach. IAW AFI 11-202V3 Chapter 8, after beginning an enroute descent or published approach, and the weather is reported or observed to be below approach minimums, the PIC has the option of continuing the approach to the

MAP/DA. Comply with the last assigned clearance until a new or amended clearance is received.

6.42.8.1. Do not continue the approach below minimums unless the runway environment is in sight and the aircraft is in a position to make a safe landing.

6.42.8.2. If the approach is continued, sufficient fuel must be available to complete the approach and missed approach, and proceed to a suitable alternate with normal fuel reserve.

6.42.8.3. The PIC has final responsibility for determining when the destination is below designated minimums, and for initiating proper clearance request.

6.42.9. Holding. An aircraft may hold at a destination that is below landing minimums, but forecast to improve to or above minimums provided:

6.42.9.1. The aircraft has more fuel remaining than that required to fly to the alternate and hold for the appropriate holding time, and the weather at the alternate is forecast to remain at or above alternate filing minimums for the period, including the holding time.

6.42.9.2. Destination weather is forecast to be at or above minimums before excess fuel will be consumed.

6.43. NVG Approach and Landing.

6.43.1. NVG Approach Weather Minimums. Weather minimums for NVG visual approaches, NVG visual pattern work, and crewmembers who are non-current and/or unqualified is 1500/3. Current and qualified NVG aircrews may fly IFR approaches with weather at approach minimums.

6.43.2. NVG Malfunction during Approach and Landing. If one of the pilots experience NVG failure on short final, it will be at the discretion of the PIC to transition to normal lights or perform a go-around. The PM will be ready to immediately assume aircraft control if the PF experiences spatial disorientation or an NVG malfunction. See AFTTP 3-3.C-130E/H for additional NVG emergency information.

6.44. Unscheduled Landings. When an unscheduled landing or crew rest occurs at a base without a passenger facility, the PIC will immediately advise the appropriate C2 agency and request assistance in arranging substitute airlift for passengers on board. The following procedures apply when obtaining support for service members, in a group travel status, who are transported on AMC organic aircraft flying a Transportation Working Capital Fund (TWCF) mission, which incur an unscheduled delay due to weather or maintenance problems, forcing the members to be lodged at that location until the aircraft can continue its mission.

6.44.1. If the delay is at a location where DOD facilities and AMC TWCF funds are available, payment for lodging (contract or on-base) will be made by the local accounting liaison/OPLOC citing TWCF funds. The appropriate TWCF fund cite may be obtained from the local financial analysis and/or accounting liaison office. Normally, a BPA contract or AF Form 616, *Fund Cite Authorization* is already established at these locations to charge the routine lodging costs for transient or TDY individuals who are on TWCF funded travel orders.

6.44.2. If the delay is at a location where DOD facilities are available and AMC TWCF funds are not available, the PIC will utilize AF Form 15, *United States Air Force Invoice* authority to acquire the appropriate lodging accommodations. Upon return to home station, the PIC will send the AF Form 15 to the local accounting liaison office. A copy of the service members' group travel orders, along with any other pertinent supporting data, must accompany the form (e.g., lodging invoice and/or receipts). When the AF Form 15 has been validated, it will be forwarded on to the servicing OPLOC for payment, citing the funds of the unit whose aircraft was delayed.

6.44.3. If the delay is at a location where both DOD facilities and TWCF funds are unavailable, the PIC will utilize AF Form 15 authority to acquire the appropriate meals, quarters, and transportation to support the service members. Upon return to home station, the PIC will send the AF Form 15 to the local accounting liaison office. A copy of the service members' group travel orders, along with any other pertinent supporting data, must accompany the form (e.g., lodging invoice and/or receipts). When the AF Form 15 has been validated, it will be forwarded on to the servicing OPLOC for payment, citing the funds of the unit whose aircraft was delayed. ***NOTE:*** This policy does not apply to those passengers on delayed TWCF organic aircraft who are in a per diem or space available status, except for those duty passengers on TWCF funded travel orders delayed at locations where TWCF funds are available.

6.45. Maintenance. Complete the AFTO Form 781 after each flight. After landing, crewmembers debrief maintenance personnel on the condition of the aircraft, engines, avionics equipment, and all installed special equipment as required. At stations without maintenance support, when a maintenance requirement exists the PIC will ensure a thorough debrief is provided to the C2 agency. On all AMC and AMC-gained missions, notify 618 AOC (TACC) Logistics Control (618 AOC (TACC)/XOCL).

6.45.1. An entry will be placed in AFTO 781A, "Aircraft Subjected to Salt Spray" (state lowest altitude and duration) anytime the aircraft is flown under 2000 feet above sea except for takeoffs and landings.

6.46. Border Clearance. The border clearance responsibility will be as designated by the base or area command in accordance with DOD 4500.54G FCG, AMCI 24-101V16, *Military Airlift – Border Clearance,* and *AMC Aircrew Border Clearance Guide.*

6.46.1. Normal Operations.

6.46.1.1. The unit dispatching the mission is normally responsible for the border clearance of its aircraft.

6.46.1.2. When support is not available, border clearance is the responsibility of the PIC. Duties may be assigned to ground personnel or to the loadmaster, but the PIC retains ultimate responsibility. When an aircraft is on-loaded at a base without an air traffic function, the PIC is responsible for ensuring the following:

6.46.1.2.1. Crewmembers, troops, and passengers possess current passports and valid visas, when required.

6.46.1.2.2. Crewmembers, troops, and passengers have current certificates of immunization (shot record).

6.46.1.2.3. Cargo entry documents are in proper order.

6.46.1.2.4. Departing or entering the United States through a location where border clearance can be obtained.

6.46.1.2.5. Obtaining border clearance for aircraft cargo, passengers, crew and baggage, if required, before takeoff to a foreign area or after arrival from a foreign area.

6.46.1.2.6. Spraying the aircraft (see the DOD 4500.54G FCG and **paragraph 6.47**).

6.46.2. Procedures for US Entry.

6.46.2.1. Enroute, the loadmaster will distribute personal customs declarations (when not accomplished by passenger services) to all passengers, troops, and crewmembers. The loadmaster will also brief passengers and crewmembers on customs regulations, and prepare and compile necessary border clearance forms for the PIC's signature.

6.46.2.2. Enroute, notify the C2 agency at the base of intended landing of any change in ETA to ensure that border clearance is accomplished as soon as possible after landing.

6.46.2.3. Obtain a permit to proceed when military necessities require that an aircraft, which has landed in the United States for customs clearance, to proceed to another base in the US to obtain border clearance. The permit to proceed delays customs inspection of cargo, passengers, and crew until arrival at the offload station, and saves intermediate offloading and reloading normally required for customs inspection. The permit to proceed is valid only to the airport of next landing where the border clearance must be completed or a new permit to proceed issued by a customs official. Do not make intermediate stops between the issue point of the permit to proceed and destination of manifested cargo unless required by an emergency or directed by the controlling C2 center.

6.46.2.4. When an aircraft lands for a US border clearance, a US Customs representative normally will meet the aircraft to obtain the required documents. Do not deplane passengers, troops, or crewmembers unless necessary for safety or the preservation of life and property (loadmaster excepted). Do not unload until approved by customs and agriculture personnel or their designated representatives. This procedure applies to the initial landing in the US and all landings required when operating on a permit to proceed or until all crew, passengers, and cargo complete final border clearance.

6.46.3. Inspections of U.S. Aircraft by Foreign Officials.

6.46.3.1. Follow USAF policy on status of military aircraft as stated in the DOD 4500.54G FCG, *General Information* (Chapter 3). In substance, this policy holds that US military aircraft are immune from searches, seizures, and inspections (including customs and safety inspections) by foreign officials. In addition, PICs must be aware of, and adhere to, any specific DOD 4500.54G FCG provisions for individual countries.

6.46.3.2. If confronted with a search request by foreign authorities, aircrews should use the following procedures.

6.46.3.2.1. In most cases, search attempts may be halted simply by a statement of the PIC to the foreign official that the aircraft is a sovereign instrumentality not subject to

search without consent of USAF headquarters or the US Department of State officials in the country concerned. This should be clearly conveyed in a polite manner so as not to offend foreign authorities that may honestly, but mistakenly, believe they have authority to search USAF aircraft.

6.46.3.2.2. If foreign authorities insist on conducting a search, the PIC should make every effort to delay the search until he or she can contact USAF headquarters (through MAJCOM C2) or the appropriate embassy officials. The PIC should then notify these agencies of foreign request by the most expeditious means available and follow their instructions.

6.46.3.2.3. If foreign officials refuse to desist in their search request, pending notification to USAF headquarters or the appropriate embassy, the PIC should indicate that he or she would prefer to fly the aircraft elsewhere (provided fuel, flying time, and mechanical considerations permit a safe flight) and request permission to do so.

6.46.3.2.4. If permission is refused and the foreign authorities insist on forcing their way on board an aircraft, the PIC should state that he/she protests the course of action being pursued and that he/she intends to notify both USAF headquarters and the appropriate American embassy of the foreign action. The PIC should not attempt physical resistance, and should thereafter report the incident to USAF headquarters and appropriate embassy as soon as possible. The PIC should escort foreign authorities if the inspection cannot be avoided.

6.46.3.3. Other procedures may apply when carrying sensitive cargo or equipment. Follow these procedures and applicable portions of classified DOD 4500.54G FCG supplements.

6.46.4. Exercises and Contingency Operations.

6.46.4.1. General. Certain airlift missions, which do not transit normal ports of entry or exit, require special procedures to expedite compliance with customs, public health, immunization, and agricultural requirements. A joint memorandum of understanding, between these agencies and MAJCOM establishes certain procedures and waivers.

6.46.4.2. Implementation. Implementation of the agreement is not automatic. Traffic and border clearing agencies implement all or part of the agreement as necessary for each operation. Inspection and clearance may be accomplished at the US onload or offload base, or at the foreign onload or offload base.

6.46.4.3. Customs Procedures.

6.46.4.3.1. Outbound: No requirement. Filing of Customs Form 7507, *General Declaration (Outward/Inward)*, is not required unless directed.

6.46.4.3.2. Inbound. Prepare one copy of the following documents before arrival:

6.46.4.3.2.1. Customs Form 7507 (Passenger list not required).

6.46.4.3.2.2. Cargo manifest.

6.46.4.3.2.3. For troops out of country less than 140 days:

6.46.4.3.2.3.1. Troop commander's certificate for examination of troop baggage.

6.46.4.3.2.3.2. One copy of the US Customs Baggage Declaration Form for each passenger not under command of the troop commander, to include observers, support personnel, civilians, news reporters, and crewmembers.

6.46.4.3.2.3.3. Upon arrival at a CONUS offload base, a customs representative will meet the aircraft and accept the troop commander's certificate with respect to troop baggage. Individual baggage declarations are not required. The troop commander should have inspected troop baggage.

6.46.4.3.2.3.4. Troops will debark under the observation of the customs representative with only a spot check of articles and baggage. The customs officer may elect to make a more extensive inspection.

6.46.4.3.2.4. For troops who are out of the country 140 days or more:

6.46.4.3.2.4.1. One copy of the U.S. Customs Baggage Declaration Form for each passenger. This includes observers, support personnel, civilians, news media personnel, and crewmembers. Personnel may use DD 1854, *Customs Accompanied Baggage, U.S.***,** or Customs Form 6059B.

6.46.4.3.2.4.2. Upon arrival at a CONUS offload base, a customs representative will meet the aircraft and collect all declarations. Troops will debark under the observation of the customs representative who may make discretionary examination of the baggage.

6.46.4.4. Public Health Procedures.

6.46.4.4.1. When operating from a base without a traffic officer, the AC will ensure all crewmembers and passengers are properly immunized.

6.46.4.4.2. Spray the aircraft if required.

6.46.4.5. Immigration Procedures.

6.46.4.5.1. Outbound: No requirements.

6.46.4.5.2. Inbound: Submit the following to the immigration inspector if carrying civilian passengers.

6.46.4.5.2.1. One copy of Customs Form 7507 (found at **http://www.customs.gov**).

6.46.4.6. Agriculture Procedures:

6.46.4.6.1. Outbound: No requirement.

6.46.4.6.2. Inbound: Consult AMC Aircrew Border Clearance Guide.

6.46.4.6.2.1. The command being airlifted will instruct troops that no fresh fruit, milk, milk products, vegetables, plants, plant pests, soil samples, animals, meat, and animal products can be brought into the United States. All items of troop personal gear/cargo are to be thoroughly cleaned of mud, dirt, sand, and other foreign material before being brought aboard the aircraft. Personal gear and

equipment must be examined for snails and other plant pests to prevent their accidental entry into the U.S.

6.46.4.6.2.2. Before loading, the command responsible for cargo being airlifted will clear vehicles and cargo of snails or other plant pests and of all mud and soil.

6.46.4.6.2.3. When required by agricultural quarantine regulations, the DOD 4500.54G FCG, or higher headquarters, the aircraft will receive an aerosol treatment 30 minutes before landing.

6.46.4.6.2.4. On arrival, agricultural inspectors will inspect the aircraft after troops have disembarked. Crewmembers will assemble remains of in-flight lunches for prompt removal by fleet service personnel.

6.46.4.6.2.5. Inspectors examine baggage, equipment, vehicles, and cargo as offloaded. Any items, vehicles, or cargo found to be contaminated will be held for such treatment as the inspector may direct (washing, steam cleaning, physical cleaning, or fumigation).

6.46.5. Military Customs Pre-clearance Inspection Program. All crewmembers will ensure compliance with Military Customs Pre-clearance requirements.

6.47. Insect and Pest Control.

6.47.1. Responsibility. PICs will ensure required spraying is accomplished according to AFJI 48-104/AR 40-12/SECNAVINST 6210.2A, *Quarantine Regulations of the Armed Forces*, January 24, 1992, DOD 4500.54G FCG, or as directed by higher headquarters. Certify the spraying on Customs Form 7507, or on forms provided by the country transited. Aircraft should never be sprayed with passengers on board. The only exception is when mandated by DOD 4500.54G FCG.

6.47.1.1. When spraying is required, use insecticide, aerosol d-phenothrin-2 percent, NSN 6840-01-067-6674 (or equivalent), to spray the aircraft. Wear leather or Nomex gloves while spraying.

6.47.1.1.1. Direct the nozzle toward the ceiling of the compartment or space being sprayed.

6.47.1.1.2. Spray spaces inaccessible from within the aircraft after completely loading fuel, baggage, cargo, and passengers, including baggage compartments, wheel wells, and other similar spaces.

6.47.1.1.3. Spray the cabin, cockpit, and other spaces accessible from within the aircraft after the crew is aboard and after closing all doors, windows, hatches, and ventilation openings. ***CAUTION:*** If the insecticide label directs disembarkation after use, spray before boarding crew or passengers. Close all doors and hatches for 10 minutes after dispensing and ventilate for 15 minutes before allowing anyone on board.

6.47.1.2. Spray for 105 seconds unless longer periods are specified for the country being transited. ***NOTE:*** Keep used aerosol cans separate from other trash so they may be disposed of safely.

6.47.2. Responsibility of PIC In-flight. When seeing any insect or rodent infestation of the aircraft in-flight, notify the destination C2 center, airfield management operations, or airport manager of the situation before landing so the proper authorities can meet the aircraft.

6.47.3. Procedure at Aerial Port of Disembarkation (APOD). On arrival at an APOD, do not open cargo doors or hatches except to enplane officials required to inspect the aircraft for insect or rodent infestation. Do not onload or offload cargo or passengers until the inspection is satisfactorily completed. This procedure may be altered to satisfy mission or local requirements, as arranged by the base air terminal manager or the local C2 organization.

Section 6G—Miscellaneous

6.48. Dropped Objects. If an externally dropped object is discovered, the flight crew will:

6.48.1. Notify 618 AOC (TACC) or the controlling agency as soon as practical; include details of routing, altitude, weather, etc.

6.48.2. Notify maintenance at the first military station transited.

6.48.3. **(Added-911AW)** If a dropped object occurs during home station sorties, the aircraft commander will inform the SOF and fill out an AMC In-Flight Emergency and Unusual Occurrence Worksheet (AMC Form 97) upon landing.

6.49. Cockpit Voice Recorder (CVR). If involved in a mishap or incident, after landing and terminating the emergency, pull the CVR and FDR power circuit breakers. This procedure keeps the CVR from recording over itself and retains the FDR data. ***NOTE:*** Some series of the C-130 also contain the FLT/VOICE RECORDER – INHIBIT circuit breaker. If this circuit breaker is pulled, the CVR and FDR will continue operating with external AC power applied to the aircraft.

6.50. Aircrew Flight Equipment (AFE) and Dash 21 Equipment Documentation. The PIC or designated representative will:

6.50.1. Before departing home station or enroute stations, ensure appropriate serviceable protective clothing, aircrew flight equipment, survival, and Dash 21 equipment for the entire or remainder of the mission are aboard the aircraft.

6.50.1.1. Restricted Aircraft AFE Configuration. Configure IAW AFI 11-2C-130V3 Addenda A.

6.50.2. Before departing home station and following enroute crew changes, review AF Form 4076, *Aircraft Dash 21 Equipment Inventory*, to ensure all required Dash 21 equipment has been certified as installed by maintenance, the initial check has been signed by maintenance, and configuration documents match mission requirements.

6.50.3. Before departing home station and following enroute crew changes, review, sign, and date the AFTO Form 46, *Prepositioned Aircrew Flight Equipment*, to ensure all required protective clothing and aircrew flight equipment and survival equipment have been certified as installed by Aircrew Flight Equipment personnel and that configuration documents match mission requirements. Ensure appropriate number and type of life preservers are aboard for over-water missions carrying children and infants.

6.50.3.1. Anti-Exposure Suits. IAW Federal Aviation Regulation (FAR) Part 135 Section 135.98, Operation in the Polar Area and FAR Part 121, Appendix P,

Requirements for ETOPS and Polar Operations, place at least two anti-exposure suits onboard aircraft for missions operating above 78 degrees North latitude and below 60 degrees South latitude.

6.50.4. Missing Equipment. Aircrew members discovering equipment missing will accomplish the following:

6.50.4.1. Make an AFTO Form 781A entry for equipment found missing. Additionally, ensure equipment removed from the aircraft at an enroute station is documented in the AFTO Form 781A.

6.50.4.2. Annotate AF Form 4076 and AFTO Form 46 in the next vacant column indicating the quantity remaining for the item. Ensure the ICAO location designator is entered above the check number of that column. Leave AF Form 4076 and AFTO Form 46 on board the aircraft in the event of an enroute crew change.

6.50.4.3. Advise the PIC and determine whether the missing equipment should be recovered or replaced before mission continuation.

6.50.4.4. Assist, as required, in preparing reports of survey for missing equipment.

6.50.4.5. When possible, advise HQ AMC/A3TL (or MAJCOM aircrew flight equipment office) and appropriate C2 agency (or airport management) before mission continuation.

6.50.5. Additional Equipment. If more equipment is discovered during the preflight than is annotated on the AF Form 4076 or AFTO Form 46, annotate the total quantity in the next vacant column for the item. Ensure the ICAO location designator is entered above the check number of that column.

6.51. Passenger Restrictions. See **paragraph 6.3.8**.

6.52. Airfield Data Reports. Aircrews transiting unfamiliar airfields or airfields where conditions may adversely affect subsequent flight will:

6.52.1. Report airfield characteristics that produce illusions, such as runway length, width, slope, and lighting, as compared to standard runways, sloping approach terrain, runway contrast against surrounding terrain, haze, glare, etc., and previously unknown obstacles, airfield markings, or other safety critical items to HQ AMC/A3AS.

6.52.2. Debrief the next C2 center transited.

6.53. Impoundment of Aircraft. If an aircraft is involved in a serious in-flight incident, the PIC shall impound the aircraft immediately after landing IAW AFI 21-101 and contact the controlling C2 agency for further instructions. If at an Air Force installation, the PIC shall request impound from the appropriate maintenance authority.

6.54. Wake Turbulence Avoidance. Comply with wake turbulence avoidance criteria. Acceptance of traffic information, instructions to follow an aircraft, or a visual approach clearance is acknowledgment that the PIC will ensure takeoff and landing intervals and accepts responsibility of providing wake turbulence separation. Refer to FLIP GP for more information concerning wake turbulence separation.

6.55. Overflying Enroute Stops. The C2 agency may approve a request to overfly a scheduled enroute stop (ANG Command Center for ANG-directed missions, AFRC command center for AFRC-directed missions).

6.56. Classified Equipment and Material. Comply with the following or as directed in MAJCOM supplement.

6.56.1. Equipment. When classified equipment is onboard, ensure the C2 Center or airfield management operations office is aware of the requirement for aircraft security according to **Chapter 7** of this AFI. At bases not under jurisdiction of the Air Force, ensure the aircraft and equipment are protected. AFI 31-401, *Information Security Program Management*, provides specific guidance concerning the security of various levels of classified equipment aboard aircraft. For classified aircraft components which cannot be removed and stored, lock and seal the aircraft. If available, use Ravens to guard the aircraft; otherwise, use guards employed by the host country for flightline/airport area control. Do not leave unguarded classified information stored in navigation or radio equipment.

6.56.2. Material. Ensure COMSEC and other classified materials are turned in at destination and receipts are obtained for COMSEC and classified material. The on-site C2 center will provide temporary storage for COMSEC and other classified materials during enroute, turnaround, and crew rest stops. If a storage facility is not available, the aircraft gun storage box may be used for material classified up to and including SECRET. A GSA-approved lock is required to store classified information IAW AFI 31-401. Encrypted COMSEC will only be transferred to authorized DOD personnel.

6.56.3. Aircrews will ensure that they have an operable Mode 4 when required for mission accomplishment. Aircrews will conduct an operational ground test of the Mode 4 (ground test assets permitting) before deployment overseas, or as specified in the OPORD or contingency/exercise tasking.

6.56.4. Attempt to fix an inoperable Mode 4 before takeoff. Do not delay takeoff nor cancel a mission for an inoperable Mode 4, except when the aircraft will transit an area where safe passage procedures are implemented.

6.56.5. Conduct an in-flight check of the Mode 4 on all missions departing the CONUS for overseas locations. Aircrews can request the Mode 4 interrogation check through NORAD on UHF 364.2.

6.56.6. Aircraft with inoperable Mode 4 will continue to their intended destinations. Repairs will be accomplished at the first destination where equipment, parts, and maintenance technicians are available. In theaters where safe passage is implemented, aircraft will follow procedures for inoperable Mode 4 as directed in the applicable airspace control order or Air Tasking Order (ATO).

6.56.7. Ground and in-flight checks of the Mode 4, when conducted, are mandatory maintenance debrief items. Crews will annotate successful and unsuccessful interrogation of the Mode 4 on all aircraft forms (AFTO Form781A).

6.56.8. Aircrews will carry COMSEC equipment and documents required to operate the Mode 4 on missions when required for mission accomplishment. Before departing for any

destination without COMSEC storage facilities, crews will contact their local COMSEC managers for guidance.

6.57. Cockpit Congestion and Loose Objects.

6.57.1. The maximum number of persons on the flight deck will be the minimum commensurate with the mission requirements. At no time will this exceed seven (unless otherwise specified in a MAJCOM supplement).

6.57.2. No items (checklists, charts, etc.) will be placed behind the condition levers or on the throttle quadrant during critical phases of flight.

6.57.3. Place only soft items on the top bunk.

6.58. Ordnance Procedures. Conduct the following procedures after the live firing of chaff/flares or the crew suspects aircraft battle damage:

6.58.1. After landing, taxi to the de-arm area or another suitable safe location to check for hung ordnance.

6.58.2. A qualified crewmember will deplane the aircraft and check all chaff/flare dispensers for hung ordnance or damage. ***NOTE:*** ALE-47 flare squibs that fail to fire are not considered hung ordnance.

6.58.3. If hung ordnance is found, identified by a protruding or partially ejected flare cartridge, the aircraft will remain in a de-arm area until Explosive Ordnance Disposal (EOD) personnel meet the aircraft. The aircraft must remain in the designated safe area until EOD personnel can clear all hung ordnance.

6.59. (Added-911AW) Defensive Systems Procedures. Defensive equipment checklist items will be called out on all tactical missions, even if the equipment is not planned to be used. Navigators will turn the equipment on (if aircraft equipped) for every tactical mission, whether they intend to use it or not (RWR on, MWS on, CMDS configured for automatic launch provided no chaff/flares are loaded).

6.59.1. **(Added-911AW)** These items are not required to be called out on non-tactical flights (unless the aircraft is loaded with chaff and/or flares), as the flight engineer is required to verify during preflight that defensive switches are off and EMI safety pins are installed.

Chapter 7

AIRCRAFT SECURITY

7.1. General. This chapter provides guidance on aircraft security and preventing and resisting aircraft piracy (hijacking) of the C-130 aircraft. AFI 13-207, *Preventing and Resisting Aircraft Piracy (Hijacking)*, AFI 31-101, *Integrated Defense (FOUO)*, and specific MAJCOM security publications contain additional guidance. Aircrews will not release information concerning hijacking attempts or identify armed aircrew members or missions to the public.

7.2. Security. The C-130 is a "Protection Level 3" resource. Aircraft security at non-United States military installations is the responsibility of the controlling agency.

7.3. Integrated Defense. The following security procedures will implement AFI 31-101, requirements for C-130 aircraft:

7.3.1. The aircraft will be parked in an established restricted area and afforded protection IAW AFI 31-101.

7.3.2. When no permanent or established restricted area parking space is available, establish a temporary restricted area consisting of a raised rope barrier, and post with restricted area signs. Portable security lighting will be provided during the hours of darkness if sufficient permanent lighting is not available. Post security forces IAW AFI 31-101.

7.3.3. At non-United States military installations, the PIC determines the adequacy of local security capabilities to provide aircraft security commensurate with this chapter. If he or she determines security to be inadequate, the aircraft will depart to a station where adequate security is available.

7.3.4. The security force must be made aware of all visits to the aircraft. The security force POC must be identified to the PIC.

7.3.5. Security support is a continual requirement and is not negated by the presence of aircrew or ground crewmembers. Security force support terminates only after the aircraft doors are closed and the aircraft taxis.

7.3.6. Locking and Sealing. Lock or seal the aircraft during a "Remain Over Night" (RON) on non-secure ramps (see **paragraph 7.6**).

7.4. Standby Aircraft Security. Ensure aircraft hatches and doors are secure to show unauthorized entry. The PIC shall notify the C2 agency the aircraft is sealed and provide them a means to access the aircraft in an emergency. Annotate the forms with the time the aircraft was sealed. The C2 Senior Controller may grant access to a sealed aircraft, shall document time of entry and ensure it remains launch capable. The PIC or designated representative must be present if access to the aircraft is required and will ensure the aircraft is resealed. The aircrew pre-preflight portion will remain valid if performed by one aircrew, sealed, and flown by another aircrew. ***NOTE:*** WG/CCs should develop local procedures for documentation and management IAW TO 00-20-1 *Aerospace Equipment Maintenance Inspection, Documentation, Policies, and Prodedures* and MAJCOM Supplement.

7.5. Enroute Security. The planning agency must coordinate with the execution agency to ensure adequate enroute security is available. The PIC will receive a threat assessment and

enroute security capability evaluation briefing for areas of intended operation prior to home station departure and should request updates from enroute C2 as required. If required, a PHOENIX RAVEN team will be assigned to the mission.

7.5.1. The PHOENIX RAVEN team will consist of two US Air Force security force members, but may include more depending on security requirements. The team's travel status is determined by MAJCOM. When in the execution phase, the team travels in MEP status and is responsible to the PIC at all times. In turn, the PIC is responsible for the team's welfare (transportation, lodging, etc.). Ensure security team members receive a mission briefing and aircraft egress/passenger briefing (as appropriate).

7.5.2. Arrival. On arrival, the PIC will assess the local situation and take the following actions as required:

7.5.2.1. Area patrol. Request area security patrols from local security forces. If local authorities request payment for this service, use AF Form 15, *United States Air Force Invoice*.

7.5.2.2. Aircrew surveillance. During short ground times, direct armed crewmembers to remain with the aircraft and maintain surveillance of aircraft entrances and activities in the aircraft vicinity.

7.5.2.3. Inadequate Security. If, in the opinion of the PIC, airfield security is inadequate and the PIC determines the safety of the aircraft is in question, the PIC may waive the FDP limits and crew rest requirements and depart as soon as possible for a base considered reliable. Report movement and intentions to the controlling agency as soon as practical. If a departure is not possible, the aircrew must secure the aircraft to the best of their ability. In no case, will the entire crew leave the aircraft unattended. Crew rest requirements will be subordinate to aircraft security when the airframe may be at risk. The PIC should rotate a security detail among the crew to provide for both aircraft protection and crew rest until relief is available. Request security assistance from the nearest DOD installation, US Embassy, local military or law enforcement agencies as appropriate.

7.5.3. Entry Control Procedures. Unescorted entry is granted to aircrew members and support personnel assigned to the mission who possess their home station AF Form 1199, *Air Force Entry Control Card*, supported by an Entry Access List (EAL) or aircrew orders. Aircrew members and assigned crew chiefs are authorized escort authority.

7.5.3.1. Normally, non-United States nationals, such as cargo handlers, can perform their duties under escort and should not be placed on the EAL.

7.5.3.2. Personnel not on the EAL or aircrew orders must be escorted within the area.

7.6. Detecting Unauthorized Entry.

7.6.1. When parking on a secure ramp, the aircraft will normally be left unlocked/unsealed to allow ground personnel immediate access. If, in the PIC's judgment, the aircraft needs to be locked and sealed in order to detect unauthorized entry, then:

7.6.1.1. Use available aircraft ground security locking devices.

7.6.1.2. Secure the doors in a manner that will indicate unauthorized entry (e.g., tape inside of doors to airframe so that entry pulls tape loose).

7.6.1.3. Close and seal the crew entrance door (box car seal). With classified equipment on board (i.e. defensive systems) the aircraft must be locked with a GSA approved lock.

7.6.1.4. Wipe the immediate area around lock and latches clean to aid in investigation of a forced entry.

7.6.1.5. Report any unauthorized entry or tampering to the Office of Special Investigation (OSI), security forces or local authorities, and the C2 agency. Have aircraft thoroughly inspected prior to flight.

7.6.2. Security awareness is crucial to effective mission accomplishment. Aircrews must always remain vigilant to their surroundings, especially at high threat, low security locations. In addition to normal preflight activities, aircrews must inspect areas of the aircraft not covered by normal preflight duties, to include: aircraft wheel wells, and crew/troop O2 service panels for unauthorized packages, personnel, or other unfamiliar devices. Report any suspicious items to host security forces. Aircrews will maintain a heightened security posture throughout all pre-takeoff activities.

7.7. Preventive Measures. Commanders at all levels must ensure preventive measures are taken to minimize access to the aircraft by potential hijackers. When a C-130 is operating away from home station, the PIC will comply with this chapter and AFI 13-207, as supplemented.

7.7.1. Preventive measures include the following: The host station passenger processing or manifesting facility should conduct anti-hijacking inspections. Do not board passengers until the PIC is fully satisfied with inspection results. In the absence of qualified passenger service representatives, the PIC will ensure the anti-hijacking inspection of passengers and baggage is accomplished.

7.7.1.1. The Transportation Security Administration provides the latest guidance on passenger screening and carry-on allowances. The latest guidance can be downloaded from **www.tsa.gov/press/happenings/index.shtm**

7.7.1.1.1. Aircrew must ensure thorough screenings are accomplished when processing passengers at locations without an AMC Passenger Terminal.

7.7.1.1.2. Carry-on restrictions apply to all passengers required to process through the passenger terminal, or equivalent when at a non-AMC location. Carry-on restrictions do not apply to personnel not required to process through the passenger terminal, or equivalent when at a non-AMC locations. This includes:

7.7.1.1.2.1. Aircrew members listed on the Flight Authorization for that mission.

7.7.1.1.2.2. MEP for that mission.

7.7.1.1.2.3. OSA/VIPSAM passenger not required to process through the Passenger Terminal (primary DV, spouses/party, aides, and security details only).

7.7.1.1.2.4. Duty passengers on ANG/AFRC mission numbers.

7.7.1.1.3. Consider baggage contained in areas not readily accessible in flight as checked baggage, even if carried to the aircraft by the passengers. This includes, but

is not limited to segregated baggage compartments, floor loaded baggage tied down with cargo straps/chains, palletized baggage, and baggage in baggage bins.

7.7.1.1.4. Brief passengers, required to process through the passenger terminal, or equivalent when at a non-AMC location, that baggage in these areas will not be accessed in flight. If these passengers attempt to access checked baggage in-flight, all attempts shall be made to stop the passengers from accessing the baggage. Land the aircraft at the nearest suitable airport (preferably a military facility) with appropriate law enforcement personnel if needed. Request assistance in removing the passenger(s) and accompanying baggage from the aircraft. Comply with all law enforcement direction.

7.7.2. Medical facility commanders are responsible for anti-hijacking inspection of patients. When patients are delivered to the aircraft by civilian sources, the aircrew will perform required inspections prior to loading.

7.7.2.1. For AE missions, the MCD is the final authority for determining what medical items can be carried by/for AE patients.

7.7.3. During exercises or contingencies in support of combat operations involving the movement of large groups of personnel, the unit being supported should manifest passengers and perform anti-hijacking inspections.

7.7.4. Passengers will not carry weapons or ammunition on their person or in hand-carried baggage aboard an aircraft. ***EXCEPTION:*** Special agents, guards of the Secret Service or State Department, RAVEN Team Members, and other individuals specifically authorized to carry weapons.

7.7.4.1. Troops or MEP status crewmembers will not retain custody of ammunition on an aircraft. They will turn it in to the troop commander or PIC. Troops may carry unloaded weapons and ammunition aboard the aircraft during combat operations. When the tactical situation dictates (in coordination with the aircrew), weapons may be loaded at the order of the troop commander or team leader.

7.7.4.2. Dummy clips that can be easily identified may be loaded for training at the order of the team leader in coordination with the aircrew.

7.7.4.3. RAVENs will only be armed in-flight on specifically designated missions identified on the mission “frag” as “RAVEN in-flight arming required”.

7.7.5. If weapons must be cleared, instruct the individual(s) to:

7.7.5.1. Move to a safe, clear area at least 50 feet from any aircraft, equipment, or personnel before un-holstering or un-slinging their weapons.

7.7.5.2. Clear weapons in accordance with standard safety procedures. Ensure troop/PIC retains ammunition IAW **paragraph 7.7.4.1**.

7.8. Preventing and Resisting Hijacking.

7.8.1. The Administrator, Federal Aviation Administration (FAA), has exclusive responsibility to direct law enforcement activity related to actual or attempted aircraft piracy (hijacking) in the United States. See CJCSI 3610.01B, Aircraft Piracy (Hijacking) and

Destruction of Derelict Aircraft Objects, January 1, 2008, Title 49 United States Code Section 46501 and Title 49 United States Code Section 44903(e).

7.8.2. In taking action during an aircraft hijacking situation, military forces will act under military command within the scope of their duties.

7.8.3. In the event an aircraft involved in an aircraft hijacking situation is carrying documents, equipment, or material that DOD has determined to be highly sensitive, or weapons of mass destruction, DOD will provide FAA, and where appropriate, the Federal Bureau of Investigation (FBI) with all pertinent information. Where possible, the FAA will consult and cooperate with DOD prior to directing any law enforcement activity.

7.8.4. An aircraft is most vulnerable to hijacking when the aircrew is aboard and the aircraft is operationally ready for flight.

7.8.5. A concerted effort must be made to prevent the hijacking of military or military contract aircraft by detecting potential hijackers before they board the aircraft.

7.8.6. Should preventive efforts fail, any actual attempt to hijack a military aircraft must be resisted in a manner appropriate to the situation.

7.8.7. Since air piracy may be committed by political terrorists or by individuals to whom the threat of death is not a deterrent but a stimulus, ordinary law enforcement procedures may be ineffective. Thus, successful conclusion of a hijacking situation and apprehension of the hijackers may require use of specialized law enforcement techniques and procedures.

7.8.8. Delaying actions have been most successful in overcoming hijackings without loss of life or property.

7.8.9. In the case of an aircraft carrying passengers, the primary concern is the safety of the passengers.

7.8.10. Assistance to hijacked civil or military contract aircraft will be rendered as requested by the pilot in command of the aircraft and the authority exercising operational control of the anti-hijacking effort.

7.9. Initial Response. When an act of air piracy involves an Air Force installation or aircraft within the United States, response will be according to the following guidelines until such time as FAA assumes active direction of anti-hijacking efforts. Resist all attempts to hijack a military aircraft. Resistance may vary from simple dissuasion, through deception and subterfuge, to direct physical confrontation, including the prudent use of weapons.

7.9.1. The following guidelines should be used to counter a hijacking, actual or threatened, while the aircraft is on the ground:

7.9.1.1. Delay movement of the aircraft to provide time for ground personnel and the aircrew to establish communication and execute coordinated resistance actions.

7.9.1.2. The authority for determining when ground resistance will be discontinued is vested in the highest available level of command. When adequate communication cannot be established, or when time does not permit, this authority is delegated in the following order:

7.9.1.2.1. MAJCOM commander exercising operational control of the aircraft.

7.9.1.2.2. MAJCOM commanders in whose AOR the airfield lies.

7.9.1.2.3. Senior operational commander on scene.

7.9.1.2.4. PIC in compliance with MAJCOM directives.

7.9.2. A hijacked aircraft carrying weapons of mass destruction will not be allowed to takeoff. Refer to DOD 5210.41M, *Nuclear Weapon Security Manual*, paragraph 9B(3), for additional guidance.

7.10. In-Flight Resistance. After airborne, success in thwarting a hijacking depends on the resourcefulness of the aircrew. Many variables of a hijacking preclude use of any specific counter-hijacking procedure. Some key factors should be evaluated before deciding a course of action to be taken, including the nature of the threat, danger to life or crippling damage to the aircraft in-flight, destination indicated by the hijacker, and the presence of sensitive material onboard. Some counter-hijacking actions the aircrew may consider are:

7.10.1. Engage the hijacker(s) in conversation in an attempt to calm them and to evaluate what course of action might be effective.

7.10.2. Dissuade the hijacker.

7.10.3. Use facts or subterfuge to convince the hijacker intermediate stops are necessary.

7.10.4. Propose more favorable alternatives, such as landing in a neutral, rather than a hostile, country.

7.10.5. Exploit any reasonable opportunity to incapacitate or overcome the hijacker physically, including the prudent use of firearms.

7.10.6. In any suspected or actual hijack attempt, the aircrew basic objective is to get the aircraft on the ground as quickly as possible and keep it there.

7.11. Communications Between Aircrew and Ground Agencies. Crews facing a hijacking threat will transmit an in-the-clear notification of hijacking to ATC. If an in-the-clear transmission is not possible, set transponder to 7500. If unable to set transponder, or if not under radar control, transmit a radio message indicating transponder change to 7500. Notify ground agencies by any means available as soon as practical and follow-up with situation reports as circumstances permit. Covert signals are no longer to be used per FAA guidance.

7.12. Forced Penetration of Unfriendly Airspace. Refer to FIH for international signals for air intercept.

7.13. Arming of Crewmembers. When crews are directed to be armed by the mission execution authority, the PIC will determine which crewmembers will be armed (at least one flight deck crewmember and one loadmaster will be armed unless directed otherwise). All crewmembers should know who is armed. The following procedures apply when arming is directed:

7.13.1. Weapons Issue. Before departing home station, obtain weapons, ammunition, box, lock and key. Crewmembers will be armed according to AFI 31-207, *Arming and Use of Force by Air Force Personnel* and MAJCOM publications. If an armed crew member must leave the crew enroute, transfer the weapon to another authorized crew member using AF IMT 1297, *Temporary Issue Receipt.*

7.13.2. Wearing of Weapons. Wear weapons in a holster, concealed at all times to prevent identifying armed crewmembers when flying missions outside of hostile areas or as directed by AOR instructions. Do not wear weapons off the flight line except to and from the C2, armories, and other facilities associated with aircrew activities if landing at an airfield outside of hostilities. When operating in a combat zone and AOR standards direct personnel to carry personal weapons the crew should fly with and carry weapons in a holster outside of the uniform and not concealed.

7.13.2.1. AMC Passenger Terminal Procedures. Armed crewmembers must discreetly identify themselves to AMC passenger service personnel upon arrival at security checkpoints. One crewmember will present a valid set of crew orders, their military identification card, and AF Form 523, *USAF Authorization to Bear Firearms*, authorizing the carrying of concealed weapons. Once terminal personnel verify this, they will allow the crewmember to vouch for the remaining crewmembers. The entire crew will then proceed through the magnetometer without removing objects from their pockets. This will prevent passengers from determining which crewmembers are armed.

7.13.3. Weapons Storage In-Flight. Crewmembers will be armed before beginning preflight, onload or offload duties and until completion of all post-flight duties. When no passengers are aboard that require arming, weapons may be stored in the gun box in-flight after a satisfactory stowaway check. Crewmembers will rearm before landing. Weapons need not be unloaded before placing them in a gun box.

7.13.4. Weapons Storage on the Ground.

7.13.4.1. Aircrews will store weapons and ammunition in the most secure facility available, normally the base armory.

7.13.4.2. In the event a secure facility is unavailable:

7.13.4.2.1. Non-stage aircrews may store weapons and ammunition in the aircraft gun box.

7.13.4.2.2. Stage aircrews should contact C2 for guidance.

7.13.5. When storing weapons in the gun box:

7.13.5.1. Weapons should not normally be unloaded.

7.13.5.2. Inform C2 which crew member has the gun box key.

7.13.6. Crewmembers will ensure they are reissued the same weapon until mission termination at home station.

7.13.7. Loading and Transfer of Weapons. Load and unload weapons at approved clearing barrels if available. Do not use a hand-to-hand transfer of loaded weapons to another crew member; place the weapon on a flat surface.

7.14. Force Protection. Crews must be alert to possibility of terrorist activities at all times. Reference AFPAM 10-100, *Airman's Manual,* Chairman, Joint Cheifs of Staff Guide 5260, *Service Member's Personal Protection Guide: A Self-Help Handbook to Combating TERRORISM;* and AFI 10-245, *Antiterrorism*, for Force Protection measures.

Chapter 8

OPERATIONAL REPORTS AND FORMS

8.1. General. This chapter provides guidelines for worksheets, reports, and forms associated with AMC operational activities. Consult governing instruction or contact wing, unit, or local flight safety officers for assistance with safety forms.

8.2. AF IMT 457, *USAF Hazard Report*. The AF IMT 457 is a tool to notify supervisors and commanders of a hazardous condition that requires prompt corrective action. For hazardous weather, complete the front side of an AF IMT 457 and send it to the parent wing flying safety office. If addressing a computer flight plan deficiency, attach a copy of the AF IMT 72, *Air Report* (AIREP)**.** Send your report so the parent unit receives it within 5 days of the event. For more information, see AFI 91-202, *The US Air Force Mishap Prevention Program.*

8.3. AF IMT 651, *Hazardous Air Traffic Report* (HATR). The AF IMT 657 is a tool to report near midair collisions and alleged hazardous air traffic conditions. See Attachment 3 of AFI 91-202 for more information concerning the HATR program.

8.3.1. AFI 91-204, *Safety Investigations and Reports*, and AFMAN 91-223, *Aviation Safety Investigations and Reports*, list HATR reportable incidents.

8.3.2. The PIC shall report the hazardous condition to the nearest ATC agency (e.g. center, Flight Service Station (FSS), control tower, or aeronautical radio station) as quickly as safety allows. Include the following information in the radio call (as appropriate)

8.3.2.1. Aircraft identification or call sign.

8.3.2.2. Time and place (radial/DME of NAVAID, position relative to the airfield, incident, etc).

8.3.2.3. Altitude or flight level.

8.3.2.4. Description of the other aircraft or vehicle.

8.3.2.5. Advise controlling ATC agency that the PIC will file a HATR upon landing.

8.3.3. Deadline to file a HATR is 24 hours after event via any communication mode available. If landing airport has a USAF airfield management function, submit completed AF IMT 651 to the airfield management officer for forwarding to wing safety office. If landing airport does not have an airfield management office, notify the safety office of the Air Force base nearest to location where the condition occurred, PIC's home base safety office, or as prescribed by overseas MAJCOM. In that case, provide contact sufficient information to prepare AF IMT 651.

8.3.4. Grant individuals who submit a HATR immunity from disciplinary action provided:

8.3.4.1. If they were the offending party, their violation was not deliberate.

8.3.4.2. They committed no criminal offense.

8.3.4.3. Their actions did not result in a mishap.

8.3.4.4. They properly reported the incident using procedures above.

8.4. AMC IMT 97, *AMC In-Flight Emergency and Unusual Occurrence Worksheet*. The AMC IMT 97 is a tool to notify appropriate authorities of any mishap involving crewmembers or aircraft. PICs shall complete all appropriate areas of the form in as much detail as possible. When notified, AMC C2 agents will inform their supervisor/commander to start investigation and reporting activities IAW AFI 91-204, *Safety Investigations and Reports*, and Operation Report 3 (OPREP-3) procedures.

8.4.1. PICs will report crewmember or passenger injury, aircraft damage, or injury/damage to another organization's people or equipment caused by PIC's aircraft/crewmember. At a minimum, report the following:

8.4.1.1. Any physiological episode (physiological reaction, near accident, or hazard in-flight due to medical or physiological reasons). These include:

8.4.1.1.1. Proven or suspected case(s) of hypoxia.

8.4.1.1.2. Carbon monoxide poisoning or other toxic exposure.

8.4.1.1.3. Decompression sickness due to evolved gas (bends, chokes, neurocirculatory collapse), or severe reaction to trapped gas that results in incapacitation.

8.4.1.1.4. Hyperventilation.

8.4.1.1.5. Spatial disorientation or distraction that results in an unusual attitude.

8.4.1.1.6. Loss of consciousness regardless of cause.

8.4.1.1.7. Death by natural causes of any crewmember during flight.

8.4.1.1.8. Unintentional loss of pressurization if cabin altitude is above FL200, regardless of effects on people on board.

8.4.1.1.9. Inappropriate use of alcohol and effects of hangover that affect in-flight duties (crewmembers only).

8.4.1.1.10. Illness (both acute and preexisting), including food poisoning, dehydration, myocardial infarction, seizure, and so forth.

8.4.1.1.11. Exposure to toxic, noxious, or irritating materials such as smoke, fumes, or liquids

8.4.1.1.12. Crewmembers and passengers involved in a physiological episode will see a flight surgeon to complete an AF Form 711GA, *Life Sciences Report of an Individual Involved in an AF Accident/Incident*, Section A, Aircraft Accident/Incident as soon as practical.

8.4.1.2. A human factors related situation, e.g. misinterpretation of instruments; information overload (i.e. tactile, aural, and visual input too fast to permit reasonable analysis/decision); aircrew task saturation (i.e. too many responses/actions required in a short period of time); or confused switchology (i.e. adjacent switches where actuation of wrong switch creates dangerous situation). Anonymous reports are acceptable.

8.4.1.3. A condition that required engine shutdown, in-flight flameout, engine failure, suspected engine power loss, or loss of thrust that required descent below MEA. Engine

failures include, but are not limited to, shrapnel from a failed internal engine component penetrating the engine case, engine case rupture/burn-through, engine nacelle fire, substantial fuel leak, or unselected thrust reversal. Consistent with safety, immediately report incidents that involve multiple engines (may report single-engine incidents upon landing). ***NOTE:*** Exclude intentional shutdowns for training and/or FCF unless the engine fails to restart.

8.4.1.4. A flight control malfunction (including the autopilot and trim systems) that results in an unexpected or hazardous change of flight attitude, altitude, or heading. Enter the flag words, "Reportable Flight Control Malfunction" in the AFTO 781A.

8.4.1.5. A landing gear malfunction aggravated by failed emergency system or procedures.

8.4.1.6. A cargo door, ramp or other door malfunction when intent for flight exists which could affect system integrity.

8.4.1.7. An in-flight loss of all pitot-static or gyro-stabilized attitude/directional instrument indications.

8.4.1.8. Any spillage/leakage of radioactive, toxic, corrosive, or flammable material from aircraft stores or cargo.

8.4.1.9. Conditions that required pilot to depart takeoff or landing surface.

8.4.1.10. All in-flight fires regardless of damage.

8.4.1.11. All bird strikes regardless of damage.

8.4.1.12. Incidents that, in the PIC's judgment, are in the interest of flight safety.

8.4.1.13. Failure/deficiency of cargo tie-down equipment.

8.4.2. Always provide your home station safety officer a copy of relevant information. Make every effort to preserve all mission and flight related documents, such as flight plans, weather briefings, NOTAMS, Weight and Balance form, etc., for collection by appropriate safety officials. PICs shall use the following precedence to report mishaps (as soon as feasible after event):

8.4.2.1. MAJCOM Flight Safety Officer (FSO).

8.4.2.2. Any FSO.

8.4.2.3. The nearest USAF C2 center.

8.4.2.4. Any USAF Airfield Management Operations.

8.4.2.5. WR-ALC/GRVDAA (Failure/deficiency of cargo tie-down equipment only)

8.5. Report Violations, Unusual Events, or Circumstances. PICs shall document events that require them to deviate from AFI 11-202V3 (unless waived by competent authority) or alleged navigation errors (include over-water position errors over 25NMs, border, or ATC violations).

8.5.1. Describe deviation(s) using the following report format:

8.5.1.1. Facts. Report pertinent details of the event.

8.5.1.2. Investigation and analysis. Report circumstances which required/drove deviation(s).

8.5.1.3. Findings and conclusions.

8.5.1.4. Recommendations to prevent recurrence.

8.5.1.5. Corrective actions taken.

8.5.2. Include the following attachments with the report:

8.5.2.1. Formal notification of incident.

8.5.2.2. AMC Form 41 or approved crew orders.

8.5.2.3. Crewmembers' official statements (if applicable).

8.5.2.4. Other pertinent documents submitted in evidence (logs, charts, etc.).

8.5.3. In addition to above (when aircraft is equipped), PIC shall download original flight plan to a floppy disk and turn it in to the C2 center or parent standardization and evaluation office.

8.5.4. OG/CC shall send the original investigation report to the appropriate MAJCOM within 45 days of the event/notification. NOTE: (ANG Only) If inquiries come from the NGB, units will respond to NGB/A3O directly who will in turn notify AMC. If inquiries originate from AMC, units will respond to AMC and courtesy copy NGB/A3O.

8.5.5. Use OPREP-3 reporting procedures contained in AFI 10-206, *Operational Reporting*, for navigation errors over 25 NMs.

8.5.5.1. When notified of a navigation position error, the PIC (or agency that receives initial notification) shall document the circumstances surrounding the incident (using report format below) and ensure C2 agents submit an OPREP-3.

8.5.5.2. Include the following information in the report:

8.5.5.3. The name and location of agency/unit submitting report.

8.5.5.4. Affected mission identification number.

8.5.5.5. Reference OPREPs-3 to determine type of event (i.e., state "navigation position error.").

8.5.5.6. The date, time (Zulu), and location (e.g., ARTCC area) of alleged infraction.

8.5.5.7. Describe facts and circumstances. Include aircraft type and tail number, unit (aircrew's wing or squadron), home base, route of flight, point of alleged deviation, and miles off course.

8.5.6. PICs shall expeditiously report unusual events/circumstances that impact their mission to appropriate MAJCOM agencies. Reportable events include, but are not limited to, spectrum interference, interception, fuel dumping, multiple engine failure, hostile fire, injury to passenger or aircrew member, etc. This list is not all exhaustive. Most events require C2 agents to forward OPREP reports to higher headquarters. In all cases, pass the "who, what, when, where, why, and how" of the incident to a C2 agency.

8.5.6.1. The Spectrum Interference Resolution Program, covered in AFI 10-707, *Spectrum Interference Resolution Program*, establishes procedures to combat the effect of meaconing, intrusion, jamming, and interference. PICs who encounter electromagnetic interference (EMI) will report the event to the nearest C2 agency as soon as practical.

8.5.6.1.1. Address EMI reports to: HQ AMC SCOTT AFB IL//A63// and addressees listed in AFI 10-707. Send reports via electronic message format with the following information in plain text:

8.5.6.1.1.1. Frequency selected when EMI occurred.

8.5.6.1.1.2. Equipment affected by EMI. Location of the system. The system function, name, nomenclature, manufacturer with model number or other system description. The operating mode of the system, if applicable (frequency agile, pulse doppler, search, etc.).

8.5.6.1.1.3. Description of EMI (noise, pulsed, continuous, intermittent, on so forth).

8.5.6.1.1.4. Effect EMI had on system performance (reduced range, false targets, reduced intelligibility, data errors, etc.).

8.5.6.1.1.5. Date(s) and time(s) of EMI.

8.5.6.1.1.6. Location where EMI occurred (coordinates or line of bearing, if known, otherwise state as unknown.)

8.5.6.1.1.7. Source of the EMI if known.

8.5.6.1.1.8. List other units that received interference (if known) and their location or distance and bearing from your location.

8.5.6.1.1.9. A clear, concise narrative summary on what you know about the EMI, with any actions taken to resolve the problem.

8.5.6.1.1.10. Whether or not PIC wants expert/technical assistance (include level of security clearance expert requires).

8.5.6.1.1.11. Specify impact the EMI had on your mission.

8.5.6.1.1.12. Provide a POC (Name, Rank, DSN/Commercial Phone Number, and Duty hours).

8.5.6.1.2. C2 agents must prepare an OPREP-3 if EMI is suspected meaconing, intrusion, or jamming, interference sufficient to cause a hazard, or if, in the PIC's judgment, the situation warrants such a report.

8.5.6.1.3. PICs shall serve as classification authority for EMI reports. Evaluate an adversaries' ability to exploit certain systems using EMI and protect information accordingly. PICs on a non-sensitive mission or who judge the EMI to be interference from a non-hostile source need not classify EMI reports unless that report would reveal system vulnerability. Classify interference report(s) at stations located in combat areas or during sensitive military missions.

8.5.6.2. PICs will immediately report all uncoordinated aircraft interceptions to 618 AOC (TACC) via the most expeditious means available (UHF/VHF, HF, AOC, etc), after complying with guidance in the Flight Information Handbook. Consideration will be given to phase of flight (i.e. descent/approach/ landing) and aircraft emergencies. When an airborne report is not accomplished, PICs must directly notify 618 AOC (TACC) upon landing. In all cases, ensure local C2 and Intel agencies are informed.

8.6. Petroleum, Oil, and Lubricants (POL) - Aviation Fuels Documentation. This section prescribes aviation POL (AVPOL) procedures that ensure correct documentation, form and invoice processing, and program supervision. Reference DOD Manual 4140.25-MVII, *DOD Management of Bulk Petroleum Products, Natural Gas, and Coal*, Chapter 16. Use the U.S. Government Aviation Into-Plane Reimbursement (AIR) card for the purchase of aviation fuel and ancillary ground services at commercial airports (and some military installations) worldwide. The AIR card is authorized for use by all U.S. government aircraft, state, local law enforcement aircraft, and some foreign government aircraft. In most cases, there will be no changes when refueling at non-Defense Energy Support Center (DESC) contract locations. A list of all AIR-accepting merchants can be found at **https://www.airseacard.com**. It replaces the Standard Forms (SF) 44, *Purchase Order-Invoice-Voucher*, at locations that accept the AIR card.

8.6.1. Responsibilities. Aircrew and maintenance personnel will be familiar with AVPOL procedures and documentation requirements of this chapter and DOD Manual 4140.25-MVII Chapter 16. Improper use of the AIR card could create financial liability for the purchaser.

8.6.2. Refuel/defuel USAF aircraft at DOD locations whenever possible. DOD FLIP enroute supplements identify locations with into-plane contracts. If DOD service is not available, purchase fuel from other source(s) in the following priority:

8.6.2.1. Defense Fuel Supply Center (DFSC) or Canadian into-plane contracts.

8.6.2.2. Foreign government air forces.

8.6.3. AVPOL Forms Documentation and Procedures.

8.6.3.1. The DD1898, *Fuel Sale Slip*, is the fuel transaction receipt used for purchases at other DOD locations, including DFSC into-plane contract locations. Log and place the DD1898 inside the AF IMT 644, *Aircraft Fuels Documenting Log*. The PIC or designated representative shall complete this form. ***NOTE:*** If the contractor insists on a unique invoice along with the DD1898, annotate the vendor's invoice with "DUPLICATE DD1898 ACCOMPLISHED."

8.6.3.2. The AF IMT 664 is a tool to log and store all AVPOL transaction forms. Record all off-station transactions on the front of the form and insert the original form inside the envelope. Turn in the AF IMT 664, with supporting forms, to maintenance debriefing or as directed by local procedures. The PIC or designated representative shall complete this form when appropriate.

8.6.3.3. The SF 44 may be used to purchase fuel, ground services and/or other authorized products when no AIR card contract is in place. Reference DOD Manual 4140.25-MVII Chapter 16 for detailed instructions.

8.6.3.4. Purchasing Aviation Fuel in Canada. The DOD and Canadian Department of National Defence have signed a memorandum of understanding allowing DOD aircraft to

use the DD1896, *DOD Fuel Identaplate*, when refueling at Canadian airfields with a Canadian National Defense Contract (CNDC). Use the AIR for fuel purchases at Canadian airports without a CNDC, and for ground handling services at all Canadian airports.

8.6.3.5. Use host country forms to effect purchases at foreign military airfields, including "replacement-in-kind" locations. Hand scribe information from aircraft identaplate on the local form. Log and place a copy inside the AF IMT 664.

8.6.3.6. AF Form 1994, *Fuels Issue/Defuel Document***,** records fuel purchases at USAF bases using a valid DD1896. The PIC or designated representative shall complete the form then log and place a copy inside the AF IMT 664.

8.6.3.7. AFTO Form 781H, *Aerospace Vehicle Flight Status and Maintenance Document***,** records POL actions for particular airframe IAW applicable directives. The PIC or designated representative shall complete the form and submit to maintenance debrief. The PIC will verify the AFTO Form 781H is completed and turned in to maintenance debriefing following the mission.

8.6.3.8. DD1896 is the aircraft fuel and oil charge card.

8.6.3.9. For off-station missions, the PIC will complete or verify accuracy of the AF FORM 15, AF IMT 664, SF 44, AFTO Forms 781H, DD1898, and associated fuels receipts then place them in the AFTO Forms 664 (use eight digits for all USAF aircraft tail number entries). The PIC will transmit all AF IMT 664 information via phone, fax, or message if mission causes him/her to be off-station past the last day of the month.

8.7. AMC Form 54, ***Aircraft Commander's Report on Services/Facilities*****.** The AMC Form 54 is a tool to report level of excellence for services encountered during mobility operations. Be quick to identify outstanding performers and attempt to resolve problems at lowest level practical. PICs should advise affected agency on their intent to submit an AMC Form 54. Provide a copy of the completed form to local station AMC C2 agency. Upon return to home station, PICs will coordinate form with SQ/CC and OG/CC. For AMC Forms 54 that require AMC coordination, OG/CCs shall review and submit AMC Forms 54 to 18 AF/CC.

8.8. AMC Form 196, ***Aircraft Commander's Report on Crew Member*****.** The AMC Form 196 is a tool to document an aircrew member or mission essential personnel's outstanding, below average, or unsatisfactory performance during a mobility mission. Be quick to identify outstanding performers and attempt to solve problems at lowest level practical (provide local senior leaders opportunity to resolve problems as they occur). Send the report to subject's unit commander.

8.9. AMC Form 43, ***Transient Aircrew Facilities Report*****.** The AMC Form 43 is a tool to report level of excellence for transient facilities. Any crewmember may submit this report whether or not the PIC includes an unsatisfactory item in the trip report. Send completed AMC Form 43 to HQ AMC/MWPS, or MAJCOM equivalent.

8.10. DD1748-2, ***Airdrop Malfunction Report (Personnel-Cargo)*****.** The DD1748-2 is used to document any airdrop malfunction IAW AFJI 13-210. Consistent with safety, immediately report off-Drop Zone (DZ) drops/extractions to the controlling agency and proper safety channels. PIC or designated representative shall complete the DD1748-2 before entering crew

rest. ***EXCEPTION:*** If a malfunction is due to a failure of the static-line retriever or CDS remote timer system, the mission may be continued provided the 80 lb tie on the knife did not break, and the knife did not nick the gate. Use the opposite static line retriever and manually activate the retriever switch at FS 245 for three seconds or perform a manual gate cut. The DD 1748-2 is not required, but a write-up in the AFTO Form 781A is required.

8.10.1. **(Added-911AW)** In the event of an actual or suspected off-drop zone or airdrop malfunction, notify the 911 AW/CP and the SOF as soon as practical. If the mishap occurs in the local training area, the mishap aircraft will terminate the mission and return to PIT. Follow procedures on pages 30-31 of the Tactical Aircrew Flimsy. All other off DZ procedures will be IAW AFI 13-217, AFJI 13-210_AMCSUP1, and AFJI 13-210_AFRCSUP1.

8.11. AF IMT 4096, *Airdrop/Tactical Airland/Air Refueling Mission Recap*. The AF IMT 4096 is a tool to document details of airdrop or tactical airland missions. PIC or designated representative shall complete AF IMT 4096 (or command supplement) and submit same to home-station tactics office.

8.12. Operational Forms for Loadmasters. Detailed instructions for the preparation, distribution, and use of the following forms may be found in the governing directive.

8.12.1. DD Form 2131, *Passenger Manifest* (AMCI 24-101V14)

8.12.2. DD Form 1385, *Cargo Manifest* (DOD 4500.32R)

8.12.3. DD 1854, *US Customs Accompanied Baggage Declaration* (DOD 5030.49R)

8.12.4. DD 1907, *Signature and Tally Record* (DOD 4500 32.R)

8.12.5. CBP 6059B, *Customs Declaration* (DOD 5030.49R)

8.12.6. CBP 7507, *General Declaration (Outbound/Inbound)*

8.12.7. AF IMT 4069, *Tiedown Equipment Checklist*

8.12.8. AF IMT 4075, *Aircraft Load Data Worksheet*

8.12.9. AMC Form 148-1(-2)(G), *Boarding Pass/Ticket/Receipt*

8.12.10. I-94, *Immigration Form, Arrival/Departure Record*

8.13. AE Event/Near Miss Reporting Process.

8.13.1. Refer to AFI 41-307, *Aeromedical Evacuation Patient Considerations and Standards of Care*, Attachment 14, for AE patient safety program.

8.14. ASAP Report. See **paragraph 5.32** for ASAP report procedures.

Chapter 9

TRAINING AND OPERATING LIMITATIONS

9.1. Passengers on Training Missions.

9.1.1. Initial qualification or re-qualification for pilots will not be conducted with passengers onboard (N/A with MEP).

9.1.2. Mission qualification/certification training, evaluations, off station trainers, and JA/ATTs may carry passengers only if the pilot in training has met Basic Aircraft Qualification requirements per AFI 11-2C-130V1, and any unqualified navigator, flight engineer, or loadmaster is under the direct supervision of an instructor.

9.1.3. If passengers are onboard, multiple approaches, touch-and-go landings, stop-and-go landings, NVG training, and airdrops are prohibited unless specifically authorization by the JA/ATT tasking order. (N/A with MEP.) ***EXCEPTION***: When approved by the MAJCOM, maintenance and civilian employees, under direct contract to the DOD and engaged in official direct mission support activities, considered "mission essential" may be onboard when touch-and-go or stop and-go landings are performed providing the mission is a designated training flight and an IP or EP is at the controls.

9.1.4. IAW AFI 11-202V3, simulated emergencies or practice emergency procedures are prohibited with any passengers or MEPs onboard. Non-flight deck crewmembers may accomplish emergency procedures or medical emergency training with passengers on board provided there is no interference with the cockpit crew and mission requirements.

9.2. Touch-and-go Landing Limitations.

9.2.1. Touch-and-go landings will only be accomplished under the direct supervision of an EP/IP or SQ/CC certified AC. Refer to AFI 11-2C-130V1 for certification requirements.

9.2.1.1. Ground idle touch-and-go landings may be performed by any pilot from either seat, when a flight examiner pilot, instructor pilot, or an instructor pilot candidate, during upgrade training/evaluation, occupies a pilot's seat.

9.2.2. Limitations.

9.2.2.1. Comply with all flight manual restrictions and procedures to include performance degradation with fuel, cargo limits, etc.

9.2.2.2. Minimum runway length for 50% flap flight idle touch-and-go landings is 5,000 feet. Minimum runway length for all other touch-and-go landings is 6,000 feet.

9.2.2.3. Minimum ceiling/visibility: 300 ft and RVR 4000 (3/4 SM visibility) with an IP, 600 ft ceiling and 2 miles visibility for touch-and-go certified ACs.

9.2.2.4. Only authorized when crosswind component corrected for RCR is within the recommended zone for the landing crosswind chart.

9.2.2.5. Do not accomplish touch-and-go landings on slush covered runways.

9.2.2.6. Authorized when normal wake turbulence criterion is met.

9.2.2.7. Do not perform a no-flap ground-idle touch-and-go landing.

9.2.2.8. Touch-and-go landings may be performed with cargo onboard provided the PIC and LM determine suitability of cargo. Touch-and-go landings with hazardous cargo on board are prohibited.

9.2.2.8.1. Cargo security is checked prior to the first touch-and-go and thereafter at an interval determined by the PIC (should not exceed 1 hour). PICs must allow additional time required for this inspection.

9.2.3. Include type of touch-and-go as part of the landing briefing (i.e., ground-idle or flight idle).

9.3. Training on Operational Missions.

9.3.1. Crews may perform multiple approaches and touch-and-go landings on TWCF and 618 AOC (TACC) directed missions provided the following requirements are met:

9.3.1.1. Normal touch-and-go limitations apply and MEPs are briefed of the activity.

9.3.1.2. All transition training will be accomplished during the first 12 hours of the FDP.

9.3.1.3. Pre-mission coordination requirements. Activity shall be approved by 618 AOC (TACC) or theater C2 agency tasking authority and unit training will be charged to the unit. As part of pre-mission planning, PICs will contact parent wing current operations and obtain training mission number(s) for use at each enroute location(s) where training events are planned. In addition, PICs will coordinate with and receive approval from unit OG/CC and the airfield(s) where training is to be accomplished. They will then coordinate with the 618 AOC (TACC) or theater C2 agency to ensure adequate ground time is available at planned training locations to allow for planned training events, clearing customs, required crew rest, etc. Once complete, wing current operations will coordinate with 618 AOC (TACC) or theater C2 agency to re-cut the mission and add the training mission number(s) in GDSS.

9.3.1.4. Upon initial arrival at the training location, close out the current line on the AFTO Form 781 and log the training time on the next line using the appropriate training mission symbol and number.

9.4. Simulated Emergency Flight Procedures.

9.4.1. Simulated emergency flight procedures will be conducted IAW AFI 11-202V3 and this instruction.

9.4.1.1. The PIC or IP will alert all crewmembers prior to practicing emergency procedures.

9.4.1.2. Practice emergencies, that require simulating an engine shutdown, placing switches in other than their normal position, or an abnormal configuration, only during training, evaluation, or currency flights when an instructor or flight examiner pilot is in one of the pilot seats. Preface all simulated emergencies with the word “simulated” and terminate simulated emergencies when an actual emergency arises. Do not conduct aircraft systems emergency procedures training during any tactical training (operating in low level environment or during tactical approaches).

9.4.1.3. Copilots and MPD trained pilots designated as AC candidates may perform any maneuver authorized for an AC (when in the left seat) under the direct supervision of an

IP. Copilots having attained 500 PAA flying hours may conduct 3-engine approaches, missed approaches, and landings with squadron commander approval and when under the direct supervision of an IP.

9.4.1.3.1. **(Added-911AW)** Prior to Aircraft Commander certification, MPD trained pilots will accomplish simulated engine failure training in the left seat only.

9.4.1.4. IP candidates who occupy a pilot seat and are under the supervision of a flight examiner pilot not in a pilot seat may practice simulated emergency procedures during initial or requalification upgrade evaluations to instructor pilot. This applies to all maneuvers in **Table 9.1** unless otherwise specified in the restrictions.

9.4.2. Simulated Engine Failure Limitations.

9.4.2.1. Do not simulate failure of two engines in flight.

9.4.2.2. Direct IP supervision required except for IP candidates under the supervision of a flight examiner during initial or requalification upgrade evaluations to IP.

9.4.2.3. One throttle may be retarded to FLIGHT IDLE at not less than VMCA (one engine inoperative, out of ground effect) and not less than 300 feet AGL.

9.4.2.4. Simulated engine-out no-flap landings are restricted to AC upgrades and above.

9.4.2.5. Planned go-around from simulated engine-out no-flap approaches are not authorized.

9.4.2.6. Required go-around from simulated engine out no-flap approaches require setting the flaps to 50% and using all four engines.

9.4.2.7. Do not compound engine out circling approaches with any other simulated malfunctions.

9.4.2.8. Weather Minimums. Crosswind component must be within the recommended zone of the landing crosswind chart.

9.4.2.8.1. **Day IMC**– at or above circling minimums for the approach being flown (600/2 if none published).

9.4.2.8.2. **Night** – 1000 feet ceiling and 2 statute miles visibility or circling minimums for the approach being flown, whichever is higher.

9.5. Flight Maneuvers.

9.5.1. Practice of the following maneuvers are prohibited in flight.

9.5.1.1. Full Stalls.

9.5.1.2. Unusual Attitudes.

9.5.1.3. Simulated hydraulic system loss by turning engine driven hydraulic pumps off.

9.5.1.4. Bank angles greater than 60 degrees (except MAJCOM-approved tactics maneuvers).

9.5.1.5. Rudder force reversal/spins.

9.5.1.6. Simulated runaway trim malfunctions.

9.5.1.7. Simulated 2-Engine approaches/landings.

9.5.1.8. Simulated engine-out takeoffs.

9.5.2. Permissible inflight maneuvers. The maneuvers listed are authorized for qualification and continuation training (or formal upgrade training where indicated). Maneuvers restricted to FTUs will only be performed during formal training under direct IP supervision. Maneuvers restricted to the FTU can also be accomplished by units using the secondary method of formal training. They are applicable to all C-130 aircraft except when prohibited or restricted by the flight manual or other current directives. The pilot or IP will alert all crewmembers before accomplishing the following:

9.5.2.1. Approach to Stalls: Direct IP supervision required. Authorized during formal upgrade training in day VMC at a minimum of 10,000 ft above the ground or 5,000 feet above the cloud deck, whichever is higher.

9.5.2.2. Instrument Steep Turns: Authorized during daylight VMC with up to 60-degrees bank. Restricted to 5,000 feet above the ground or cloud deck for bank angles in excess of 45 degrees. Check stall speed prior to making instrument steep turns.

9.5.2.3. Slow Flight: Direct IP supervision required. Authorized at or above 5,000 feet AGL. Fly at approach, threshold, and 1.2 power off stall speed with gear down and flaps 0%, 50%, or 100%. Do not exceed 15-degrees of bank.

9.6. Briefing Requirements.

9.6.1. Training/Evaluation Briefing. Before all training/evaluation missions, instructors/flight examiners will brief the crew on requirements and objectives for each student or examinee.

9.6.2. Debriefing. Review and evaluate overall training performed. Each student or aircrew member should understand thoroughly what training has been accomplished. Ensure all training is documented.

9.7. Simulated Instrument Flight. Artificial vision restricting devices are not authorized for any phase of flight. Simulated instrument flight may be flown and logged without the use of a vision-restricting device.

9.8. Operating Limitations.

9.8.1. Unless specifically authorized elsewhere, do not practice emergency procedures that degrade aircraft performance or flight control capabilities.

9.8.1.1. In an actual emergency, terminate all training and flight maneuvers practice.

9.8.2. Low/Missed Approaches. Initiate a planned missed approach no lower than:

9.8.2.1. Precision approach – Decision Altitude.

9.8.2.2. Non-precision approach – MDA.

9.8.2.3. Visual Approach – 200 feet AGL for simulated emergencies (no minimum for non-emergency).

9.8.2.4. Restricted Low Approach (aircraft, equipment, or personnel are on the runway) – 500 feet AGL.

9.9. Landing Limitations.

9.9.1. No-Flap Landing Limitations:

9.9.1.1. Direct IP supervision required

9.9.1.2. Not authorized for copilots with less than 500 PAA hours.

9.9.1.3. No-flap circling approaches are not authorized for copilots.

9.9.1.4. Engine out no-flap approaches are not authorized for copilots.

9.9.1.5. Do not combine no-flap circling approaches with any other simulated emergencies.

9.9.1.6. Maximum gross weight is 120,000 lbs.

9.9.1.7. Crosswind component must be within the recommended zone on the crosswind chart.

9.9.1.8. Authorized in daylight IMC if the weather is at or above circling minimums and at night with weather at or above 1000 foot ceiling and 2 SM visibility or circling minimums whichever is higher.

9.9.1.9. Use 50% flaps for a go-around. ***NOTE:*** Check no-flap landing distance with runway available.

9.9.1.10. **(Added-911AW)** Prior to Aircraft Commander certification, MPD trained pilots will accomplish no-flap training in the left seat only.

9.9.2. Stop-and-Go Landing Criteria:

9.9.2.1. Authorized only on designated training, evaluation, or currency missions.

9.9.2.2. Authorized to be performed by any C-130 qualified pilot.

9.9.2.3. Runway remaining for takeoff must be greater than or equal to CFL.

9.9.2.4. Crosswind component corrected for RCR must be in the recommended zone of the landing crosswind chart.

9.9.2.5. Ceiling and visibility must be at least 300 feet and ¾ mile (RVR 4000).

9.9.2.6. Do not perform stop-and-go landings:

9.9.2.6.1. In conjunction with no-flap landings.

9.9.2.6.2. When normal wake turbulence criterion is not met.

9.9.3. Max-effort landing limitations & brake cooling procedures. A lack of consideration for the heat generated in the wheel brakes can result in fused or hot brakes leading to a possible tire explosion or fire. Crews are reminded to review the Dash -1 regarding use of wheel brakes and hot weather procedures. During training, the following procedures will be followed while conducting multiple max-effort landings using partial brake landing criteria:

9.9.3.1. Outside ambient air temperatures of < 35 degrees Celsius

9.9.3.1.1. Crews will not perform more than three consecutive heavy weight max-effort landings (115,000 – 130,000 pounds) without an approx 15 minute airborne

gear-down brake cooling period (i.e. VFR pattern to either a touch-and-go or a low approach to the main.

9.9.3.2. Outside ambient air temperatures of > 35 degrees Celsius:

9.9.3.2.1. Crews will not perform more than two consecutive heavy weight max-effort landings (115,000 – 130,000 pounds) without an approx 15 minute airborne gear-down brake cooling period (i.e. VFR pattern to either a touch-and-go or a low approach to the main runway).

9.9.3.2.2. Crews will not perform more than three consecutive max-effort landings (<115,000 pounds) without an approx 15 minute airborne gear-down brake cooling period (i.e. VFR pattern to either a touch-and-go or low approach to the main runway).

9.9.3.2.3. Crews should not terminate or conduct operations requiring extended brake application (i.e. ERO, seat swap, etc.) following a max-effort or no flap landing. On normal landings, crews should consider extending rollout to minimize the use of the brakes.

9.9.3.3. If the crew observes the initial signs of possible brake overheating, consider taking off and leaving the gear down for at least a 15-minute gear cooling period (i.e. to a low approach or touch and go). If hot brakes are suspected, follow the Dash-1 procedures and do not set the parking brake, but chock the nose wheel prior to ground evacuation/engine shutdown.

9.10. Actual Engine Shutdown and Airstart. Direct IP supervision required. One engine may be shutdown at no lower than 2,500 feet AGL or MSA (whichever is higher) in daylight VMC.

9.11. Windmill Taxi Start. Direct IP supervision required. Authorized during daylight. Crosswind component must be within the recommended zone of the flight manual takeoff crosswind chart. Runway must be dry, hard-surfaced, and at least 147 feet wide. Dash one recommendations are mandatory. Requires OG/CC approval when performed at units other than the FTU.

9.12. Aborted Normal Takeoff. Direct IP supervision required. Authorized during formal upgrade training in daylight. Crosswind component must be within the recommended zone of the takeoff crosswind chart. Runway must be dry, hard-surfaced, and long enough to allow refusal and takeoff speeds to be equal. Initiate the abort by stating “REJECT” before refusal speed. Do not practice aborts from touch-and-go landings. Do not shut down an engine due to simulated malfunctions. Requires OG/CC approval.

9.13. Aborted Maximum Effort Takeoff. Direct IP supervision required. Authorized for AC upgrades and above during formal upgrade training. Restricted to the main runway during daylight. Crosswind component must be within the recommend zone of the takeoff crosswind chart. Runway must be dry, hard surfaced, 147 feet wide and long enough to allow refusal and takeoff speeds to be equal. Simulate a runway length less than CFL. Initiate the abort by stating “REJECT” at or below a refusal speed based on simulated runway length. Compare the distance traveled to runway length and point out the ramifications of operating with less than critical field length. Cool brakes between aborted takeoffs. Do not shut down an engine due to simulated

malfunctions. Do not practice aborted max effort takeoffs from stop-and-go landings. Requires OG/CC approval.

9.14. Maximum Effort Takeoff. ACs may accomplish maximum effort takeoffs. Maximum effort takeoffs should be performed from the main runway when it is available (i.e., safe and practical to taxi from an assault landing zone).

9.15. Night Vision Goggle (NVG) Training. Crews will accomplish aircrew training according to AFI 11-2C-130V1 and MAJCOM approved training guides before performing NVG operations.

9.15.1. C-130 Airland Training.

9.15.1.1. Copilots may accomplish NVG landings under the direct supervision of an IP.

9.15.1.2. Ground Operations Training. NVG combat offloads and ground maneuvering are approved. Lights will be kept to a minimum during all NVG operations. Blacked out (no-light) operations in the cargo compartment are not authorized.

9.15.1.3. NVG touch-and-go landings are authorized. Pilots who are both Touch-and-Go certified and NVG Airland certified may perform NVG Touch-and-Go landings IAW **paragraph 9.2**. ***WARNING:*** Crews must be thoroughly familiar with the visual and/or aural cues required to identify the amount of runway remaining when performing Touch-and-Go operations.

9.15.1.4. Runway must be lit with an authorized covert/overt lighting pattern or panels.

Table 9.1. Training Flight Restrictions.

Maneuver	Altitude	Remarks
Instrument Missed/low approaches	MDA/DA	Initiate practice instrument missed approaches no lower than the minimum altitude for the type of approach executed.
Visual Low Approach/Planned Go Around	200 Feet for simulated emergencies. No minimum for non-emergency	
Men and equipment on runway	Initiate above 500 ft AGL	
Simulated Engine Failure		Certified 500 PAA hour copilot or above with direct IP Supervision. Hour limitation does not apply to MPD trained pilots. Prohibited during tactical operations. Retard one throttle to flight idle at not less than VMCA (one engine inoperative, out of ground

		effect) or less than 300 feet AGL. Authorized day IMC if WX at or above circling minimums or night if weather is at or above 1,000 foot ceiling and 2 SM visibility. Crosswind component must be in the recommended zone. Engine out no flap landings are restricted to ACs and above, and planned go-around are not authorized. Engine out circling approaches will not be compounded with any other simulated malfunctions.
No-Flap Landing		Requires the direct supervision of an IP Not authorized for copilots with less than 500 PAA hours. Simulated engine-out-no-flap approaches not authorized for CPs. No-flap circling approaches will not be combined with any other simulated emergencies. Max gross weight is 120,000 lbs. and crosswind component must be within the recommended range. Authorized in day IMC if WX is at or above circling minimums, and at night with WX or 1,000 foot ceilings and 2 SM visibility or circling minimum, whichever is higher.
Touch-and-Go Landings		Requires the direct supervision of an IP or SQ/CC certified AC and minimum of 100 hours pilot-in-command. ACs restricted to flight idle touch and go landings. Ground idle touch and go landings may be performed by any pilot from any seat when a flight evaluator, IP or IP candidate

		during upgrade/evaluation occupies a pilot's seat. No-flap ground idle touch and go landings not authorized. Minimum runway length: flaps 50 percent, 5,000 feet – for all other, 6,000 feet. Crosswind component corrected for RCR is within recommended zone. Minimum ceiling of 600 ft and minimum visibility of 2 SM (300-ft and RVR 4000 (3/4 SM visibility) if an IP is in either seat.)
Stop-and-Go Landings		Authorized only on designated training, evaluation or currency missions. Authorized to be performed by any C-130 qualified pilot. Runway remaining for takeoff must be equal to or greater than limiting CFL. Crosswind component corrected for RCR must be in recommended zone of the landing crosswind chart. Ceiling and visibility must be at least 300-feet and ¾ mile (RVR 4000)
Slow Flight Demonstration	At or above 5,000 feet AGL.	Direct IP supervision required. Fly at approach, threshold, and 1.2 power off stall speed with gear down and flaps 0%, 50%, or 100%. Do not exceed 15-degrees of bank.
Approach to Stalls	At or above 10,000 feet above the ground or 5,000 feet above the cloud deck	Direct IP supervision required. Authorized during formal upgrade training Day VMC

Steep Turns	5,000 feet for bank angles in excess of 45 degrees	Not applicable during tactical maneuvers. Authorized during day VMC with up to 60-degrees of bank. Review stall speeds before performing turns.
NOTE: These restrictions do not apply to operational missions.		

Chapter 10

AIRCREW OPERATIONS IN CHEMICAL, BIOLOGICAL, RADIOLOGICAL, AND NUCLEAR THREAT ENVIRONMENT

10.1. Overview. The proliferation of Chemical, Biological, Radiological, and Nuclear (CBRN) weapons and the means to deliver them present serious security threats to the global operations of air mobility forces. This chapter describes the CBRN threat, passive defense measures to mitigate that threat, and guidance for ground and flight operations in a contaminated environment. For additional guidance see the AMC C-CBRN CONOPS.

10.2. Understanding the CBRN Threat.

10.2.1. Chemical Weapons. Militarily significant chemical weapons include nerve, blister, choking, and blood agents. A key point for aircrew members to remember is that time is on your side. The ultra-violet (UV) rays of the sun, high temperatures, and high absorption rates of chemicals all decrease their lethality. Most chemical agents will either evaporate or absorb into surfaces. For decontamination, cleaning with hot soap and water and/or a 5 percent bleach solution currently appears to be the best and most practical method of removing chemical agents that may remain as a contact hazard on glass, and unpainted metal. Currently, the only decontaminate authorized for use on aircraft is soap and water. **NOTE:** Recent tests indicate that as a decontaminated aircraft dries, the absorbed chemical warfare agent (CWA) may resurface from painted surfaces causing contact and vapor hazards.

10.2.2. Biological Weapons. Biological warfare agents (BWA) are normally divided into three areas: bacteria (i.e., Anthrax) that live outside the cell, reproduce, and are normally susceptible to antibiotics; toxins (i.e., Ricin), that are poisons produced by living organisms or plants; and viruses (i.e., Smallpox) that normally require the host of a living cell to survive and reproduce. Viruses and toxins do not respond to antibiotics. It is probable that the medical community would be the first to recognize that an upsurge in “flu-like symptoms” is actually a bio attack. Although BWA are degraded by UV rays, humidity and high/low temperatures, some BWA (i.e., Anthrax spores) may have a long life, lasting decades under the right conditions. Current immunizations and good personal hygiene help prevent infection.

10.2.3. Radiological Weapons. The radiation dispersal device (RDD), or so-called “dirty bomb,” is the typical radiological weapon. RDD is any device that disseminates radioactive material without using a nuclear detonation. Key points to remember are that shielding and distance are the best defenses against radiation exposure.

10.2.4. Nuclear Weapons. The threat from a nuclear device is from the initial blast, heat, initial radiation, and residual fallout. In addition, the Electromagnetic Pulse (EMP) from a nuclear detonation can damage electronic equipment. The best protection is a combination of shielding, distance from the blast, and limited time of exposure.

10.3. CBRN Passive Defense Measures. Passive defense measures are those activities conducted to negate, contain, and manage the effects of CBRN attack. Passive defense measures include pre, trans, and post-attack actions designed to mitigate the CBRN threat through contamination avoidance, protection, and contamination control.

10.3.1. Contamination Avoidance. Contamination avoidance is the most important passive defense measure. Techniques for contamination avoidance include: inflight diversion, survival launch, and minimizing exposure to contaminated cargo, AGE, and material handling equipment (MHE).

10.3.1.1. Inflight Diversion. When advised that a destination airfield is under CBRN attack or has been contaminated, the aircrew will divert to an uncontaminated airfield, if at all possible. Authority to land at a contaminated airfield will be specified in the controlling OPORD

10.3.1.2. Survival Launch. If caught on the ground during attack warning, every reasonable effort will be made to launch to avoid the attack. Upon proper clearances, aircrew may launch to survive if they have sufficient fuel and unrestricted, safe access to the runway. In practice, this option may only be practical for aircraft that have just landed or aircraft at or near the end of the runway. If launch is not possible, shut down engines and avoid running environmental control systems. Close aircraft doors/hatches/ramps, don Individual Protective Equipment (IPE), and seek personal protective cover on the base. If time does not permit using base facilities, and the attack is a missile attack, remain in the sealed aircraft for a minimum of one-hour after the attack and/or follow host-base guidance.

10.3.1.3. Avoiding Cross Contamination from AGE, MHE, and Cargo. All formerly contaminated equipment and cargo must be marked to facilitate contamination avoidance and the use of protective measures. Additionally, the air shipment of formerly contaminated cargo requires special precautions and must be specifically authorized by the senior transportation commander.

10.3.2. Protection. When exposure to chemical and/or biological agents cannot be avoided, protection provides the force with the ability to survive and operate in a CBRN environment. Protection is afforded by individual protective equipment, collective protection, and hardening of facilities.

10.3.2.1. Individual Protective Equipment. Aircrew Chemical Biological, Radiological, Nuclear (ACBRN) protective equipment contained in D-Bags is the in-flight protective gear for aircrew members. Aircrew CBRN equipment includes Aircrew Eye-Respiratory Protection (AERP) mask or Joint Service Aircrew Mask (JSAM), filter blower and communication unit for above the shoulder protection. Below the shoulder protection is provided by CWU-66/P Aircrew Chemical Ensemble (ACE), butyl gloves, and cotton inserts. The Ground Crew Ensemble (GCE) consists of items in the C-Bag, including a protective mask (MCU-2A/P or M50 Series), C2 series canister/M50 series filter (as applicable for each type of mask), an overgarment, boots, and gloves. The ACBRN equipment and GCE provide protection against chemical and biological agents. They do not provide nuclear blast protection. However, they do provide limited protection from radiological particulates as well as low level radiation from an RDD. Aircrew CBRN equipment requires care during donning using "buddy dressing" procedures and AFE expertise during processing through the Aircrew Contamination Control Area (ACCA). ***NOTE:*** AECMs will utilize the MCU-2A or M50 series ground crew mask.

10.3.2.1.1. ACBRN Equipment/GCE Issue. Aircrews will be issued sized D-Bags and C-Bags at home station as dictated in reporting instructions or SPINS. Aircrews

will ensure D-Bags and C-Bags are available at all times when issued for a CBRN threat area. Aircrew members will confirm the mobility bag contents and correct sizes.

10.3.2.1.2. ACBRN Equipment Wear During Ground Operations. Because aircraft contamination is unlikely to occur during flight, ground operations represent the highest threat to aircrew safety. Protection from enemy attacks and exposure to liquid chemical agents is paramount. Aircrew should limit activities to essential duties only, and separate ground duties from air duties. For example, use a duty crew in GCE to conduct pre-flight inspection of the aircraft.

10.3.2.1.3. ACBRN Equipment Wear During Flight Operations. As referenced in **paragraph 3.7.1.1.3**, it may be necessary to limit the FDP for aircrew members in IPE. The FDP of encumbered crewmembers should be limited to account for increased fatigue. Although adjustments to the FDP will be scenario dependent (i.e., shorter FDP for high-intensity tactical operations), the maximum recommended CDT is 12 hours with an 8-hour FDP. An example scenario is for an auxiliary crew to preflight the aircraft while the flying crew dons IPE less than 1 hour prior to flight; the mission profile includes 8 hours of flight duty with no more than 2.5 hours spent in a low level profile. For missions that are less demanding, a longer FDP may be possible. Consider additional crew rest of up to 48 hours between back to back encumbered missions.

10.3.2.2. Collective Protection. Collective protection provides a temperature-controlled, contamination-free environment to allow personnel relief from continuous wear of IPE such as the ACBRN. The basic concept for most facility collective protective solutions is to employ overpressure, filtration, and controlled entry/exit. The intent is to provide rest and relief accommodations, as well as provide medical treatment in contamination free zone. Crewmembers should avail themselves of facilities, if provided, on the airfield.

10.3.2.3. Hardening. Permanent and expedient hardening measures are used to strengthen buildings and utility systems or provide barriers to resist blast effects. To reduce the potential of vapor exposure in facilities without collective protection; seal windows and doors, turn off HVAC systems, and use room above the first floor when possible.

10.3.3. Contamination Control. In the post-attack environment, contamination control measures limit the spread of chemical, biological, and radiological contamination through disease prevention measures, decontamination, and use of Exchange Zone (EZ) operations. Effective contamination control helps sustain air mobility operations by minimizing performance degradation, casualties, or loss of material.

10.3.3.1. Disease Prevention. Up-to-date immunizations, standard personal hygiene practices, and the use of chemoprophylaxis are effective biological warfare defensive measures.

10.3.3.2. Decontamination.

10.3.3.2.1. Inflight Decontamination. Air washing is a useful inflight decontamination technique for removing most of the liquid agent from aircraft metal surfaces. However, vapor hazards may remain in areas where the airflow

characteristics prevent complete off-gassing (i.e., wheel wells, flap wells, rivet and screw heads, joints, etc.). Flights of at least 2 to 4 hours are recommended, and lower altitudes are more effective than higher altitudes. Fly with the aircraft configured (gear, flaps, and slats extended) as long as possible to maximize the airflow in and around as many places as possible. Be advised that exterior contamination may seep into the aircraft interior creating a vapor hazard for aircrews. Use of ACBRN is recommended. Follow smoke and fume elimination procedures to help purge interior contamination.

10.3.3.2.2. Limits of Decontamination. Complete decontamination of aircraft and equipment may be difficult, if not impossible, to achieve. Formerly contaminated assets will be restricted to DOD-controlled airfields and not released from US government control.

10.3.3.3. Exchange Zone (EZ) Operations**.** The AMC Counter-Chemical, Biological, Radiological, and Nuclear Concept of Operations (AMC C-CBRN CONOPS)) describes a method for continuing the vital flow of personnel into a contaminated airfield while limiting the number of air mobility aircraft and personnel exposed to the contaminated environment. The purpose of the EZ is to minimize the spread of contamination within the air mobility fleet, preserving as many aircraft as possible for unrestricted international flight. The EZ is an area (located at uncontaminated airfield) set aside to facilitate the exchange of uncontaminated (clean) cargo/passengers to a contaminated (dirty) airframe, or visa versa, without cross-contamination. Additional information on the EZ is available through HQ AMC/A3N.

10.4. Flight Operations.

10.4.1. Mission Planning. Aircrews must be mentally prepared to face the dangers of CBRN weapons. Flight/mission planning must be thorough. Aircraft commanders should emphasize ACBRN equipment wear, crew coordination, CBRN hazards and countermeasures, in-flight diversion, plans for on-load/offload in the event of a ground attack, and plans for the return leg in the event of aircraft contamination. Alternative scenario plans should also be considered in the event MOPP conditions change.

10.4.2. Establishing the Threat Level. Aircrews should monitor command and control channels to ensure they receive the latest information concerning the destination's alert condition. Diversion of aircraft to alternate "clean" locations may be required, unless operational necessity otherwise dictates. The 618 AOC (TACC) or theater C2 agency (normally through the controlling OPORD) will direct aircrew pre-exposure activities such as medical pre-treatment for chemical/biological exposure or issue of dosimetry for potential radiological hazards. Medical authorities may also prescribe the use of post-exposure therapeutics to reduce the possibility of infection.

10.4.3. Fuel Requirements. Extra fuel may be needed to compensate for altitude restrictions as the result of CB agent exposure. During purge periods, the aircraft will be unpressurized. Although the aircrew can use the aircraft oxygen systems, passengers wearing GCE cannot, thus restricting the aircraft cruise altitude and increasing fuel requirements accordingly.

10.4.4. Oxygen Requirements. Operating a contaminated aircraft will increase oxygen requirements. Aircrew wear of ACBRN equipment will require use of the aircraft oxygen

system to counter actual/suspected contamination. Using the 100 percent oxygen setting offers the greatest protection in a contaminated environment. Appropriate oxygen reservoir levels must be planned to meet higher consumption rates. Use the aircraft Dash 1 charts to calculate the required reservoir levels.

10.4.5. Donning Equipment. Aircrew will don ACBRN equipment based on the alarm condition (See Airman's Manual AFPAM 10-100). Use the "buddy dressing" procedures, and refer to locally developed donning checklist contained in the D-Bag to ensure proper wear. When wearing the ACBRN equipment, Atropine and 2 PAM Chloride auto injectors will be kept in the upper left ACBRN equipment pocket. If the integrated survival vest/body armor is worn, the Atropine and 2 PAM Chloride auto injectors may be kept in the lower right flight suit pocket. This standardized location will enable personnel to locate the medication should an individual be overcome by CWA poisoning. M-9 paper on the flight suit will facilitate detection of liquid chemical agents and ACCA processing. M-9 paper should be placed on the flight suit prior to entering the CBRN threat area or when an alarm "yellow" or higher has been declared. When inbound to a CBRN threat area, prior to descent, the aircraft commander will ensure crew and passengers don appropriate protective equipment IAW arrival destination's MOPP level and brief aircrew operations in the CBRN threat area. As a minimum, this briefing will include: flight deck isolation, oxygen requirements, air conditioning system requirements, IPE requirements, ground operations, and MOPP levels. Aircrew members must determine if the wear of the integrated survival vest/body armor and LPUs will restrict dexterity and mobility to the point that it becomes a safety issue. If the aircrew deems the equipment to create a safety of flight concern, then the items may be pre-positioned (instead of worn) on the aircraft to be readily available to the aircrew.

10.4.6. Communicating Down-Line Support. Pass aircraft and cargo contamination information through command and control channels when inbound. This information will be used to determine if a diversion flight is required or decontamination teams are needed. Report the physical condition of any crew/passengers who are showing agent symptoms and whether they are wearing chemical defense ensembles.

10.5. Ground Operations.

10.5.1. Crew Rest Procedures. Operational necessity may require the aircrew to rest/fly in a contaminated environment. If the mission is not being staged by another aircrew or pre-flight crews are not available, the aircrew may pre-flight, load, and secure the aircraft prior to entering crew rest. The departing aircrew will perform necessary crew preparations and pre-flight briefings. If possible, aircrew transport should be provided in a covered vehicle. Aircrews should avoid pre-flighting the aircraft prior to departure to prevent contamination spread to them and/or the aircraft. As aircrews proceed to fly, they will require assistance from ground support personnel in removing their aircrew protective overcape and overboots prior to entering the aircraft.

10.5.2. Onload and Offload Considerations. Extreme care must be exercised to prevent contamination spread to the aircraft interior during ground operations, particularly to the flight deck area. Reduce the number of personnel entering the aircraft. Contaminated engine covers, safety pins and chocks will not be placed in the aircraft unless sealed in clean plastic bags and properly marked IAW technical order requirements. Aircrew members entering the

aircraft will remove plastic overboots and overcape portions of the aircrew ensemble and ensure flight/mobility bags are free of contaminants and placed in clean plastic bags. Prior to entering the aircraft all personnel should implement boot wash/decontamination procedures. Aircrew exiting aircraft into a contaminated environment will don plastic overboots and overcape prior to leaving the aircraft.

10.5.3. Communications. Conducting on/offloading operations, while wearing the complete ACBRN, complicates communications capability. Use the mini-amplifier/speaker or the aircraft public address system and augment with flashlight and hand signals, as required.

10.5.4. Airlift of Retrograde Cargo. IAW JP 3-40, *Combating Weapons of Mass Destruction, in a Contaminated Environment*, USTRANSCOM may restrict the retrograde of contaminated cargo to 'mission critical' equipment (as determined by the GCC and authorized by SecDef).

10.5.5. Passenger/Patients. USTRANSCOM policy states that patients, personnel, or casualties with known or suspected contamination from chemical, biological, or nuclear warfare agents will not be transported within the aeromedical patient movement system. Decontamination must be performed prior to transport to prevent the potential spread of contamination. In rare cases, transport may be essential to preserve life or continue critical missions. In these cases, prior approval must be given by the involved GCC, CDRUSTRANSCOM, and SECDEF in consultation with DoD medical authorities. Additionally, patients with known or suspected or highly contagious diseases will not be transported within the patient movement system. In extreme circumstances there may be a requirement to move index cases (approximately two) for evaluation or critical medical care. If patient movement is required, prior approval must be given by the involved GCC, CDRUSTRANSCOM and SECDEF in consultation with medical authorities.

10.5.6. Physiological Factors. Aircraft commanders must be very sensitive to the problems resulting from physical exertion while wearing ACBRN. The aircraft commander should consider factors such as ground time, temperature and remaining mission requirements when determining on/offload capabilities. Individuals involved should be closely monitored for adverse physiological effects.

10.5.7. Work Degradation Factors. Work timetables need to be adjusted to minimize thermal stress caused by wearing the ACBRN. Aircrews must weigh all factors when performing in-flight and ground duties. Table 10.1. has degradation factors for wearing full GCE, and may also be used to represent the Task Time Multipliers for the ACBRN. A more extensive discussion of this subject is found in AFMAN 10-2503, *Operations in a Chemical, Biological, Radiological, Nuclear, and High-Yield Explosive (CBRNE) Environment*.

Table 10.1. Task Time Multipliers.

Heat Category	WBGT[1] Index (ºF)	Light (Easy) Work		Moderate Work		Hard (Heavy) Work	
		Work/ Rest[2]	Water Intake[3] (Quart/Hr)	Work/ Rest[2]	Water Intake[3] (Quart/Hr)	Work/ Rest[2]	Water Intake[3,5] (Quart/Hr)
1	78-81.9	NL[4]	1/2	NL	3/4	40/20 min	3/4

2	82-84.9	NL	1/2	50/10 min	3/4	30/30 min	1
3	85-87.9	NL	3/4	40/20 min	3/4	30/30	1
4	88-89.9	NL	3/4	30/30 min	3/4	20/40 min	1
5	≥90	50/10 min	1	20/40 min	1	10/50 min	1

NOTES:
1. If wearing MOPP 4, add 10ºF to Wet Bulb Globe Temperature (WBGT). If wearing personal body armor in humid climates, add 5ºF to WBGT.
2. Rest means minimal physical activity (sitting or standing), accomplished in shade if possible.
3. ***Caution:*** Daily fluid intake should not exceed 12 quarts. Hourly fluid intake should not exceed
1 quart. The work/rest time and fluid replacement volumes will sustain performance and hydration for
at least 4 hours of work in the specified work category. Individual water needs will vary ±¼ quart/ hour.
4. NL=no limit to work time per hour.
5. For continuous work in temperatures above 80ºF, personnel will consume 2 quarts of water.

10.5.8. Outbound with Actual/Suspected Chemical Contamination. Once airborne with actual/suspected vapor contamination, the aircraft must be purged for 2 hours using Smoke and Fume Elimination procedures. To ensure no liquid contamination exists, a close inspection of aircrew, passenger ensembles, and cargo will be conducted using M-8 and M-9 detection paper. Detection paper only detects certain liquid agents and will not detect vapor hazards. Above the shoulder ACBRN equipment should only be removed if there is absolutely no vapor hazard. Be advised that residual contamination (below the detectable levels of currently fielded detection equipment) may be harmful in an enclosed space. The aircrew must take every precaution to prevent spreading of liquid contaminants, especially on the flight deck area. The best course is to identify actual/suspected contamination, avoid those areas for the remainder of the flight, and keep the cargo compartments cool. If an aircrew member or passenger has been in contact with liquid contaminants, all personnel aboard the aircraft will stay in full ACBRN equipment/GCE until processed through their respective contamination control area (CCA). Upon arrival, the contaminated aircraft will be parked in an isolated area and cordoned to protect unsuspecting ground personnel.

10.5.9. Documenting Aircraft Contamination. When it is suspected or known that an aerospace vehicle or piece of equipment has been contaminated with a radiological, biological or chemical contaminant, a Red X will be entered in the AFTO Form 781A and an annotation will be made in the historical records for the lifecycle of the equipment.

10.5.10. 10 & 50-Foot Rules. The 10-foot rules was developed in order to provide guidance for protecting personnel using or handling contaminated resources (such as pallets) or working in locations with materials that might retain a residual chemical. The 50-foot rule was adopted for larger contaminated structures, such as contaminated aircraft and buildings

that generate more agent off-gassing. The 10/50-foot rules embody a safety factor that goes beyond current OSD guidance (which allows removal of IPE whenever detectors no longer detect a chemical agent vapor hazard). There are two phases associated with the 10/50-foot rules.

10.5.10.1. Initial Phase. During the initial phase, personnel will remain in MOPP 4 whenever they stay within 10/50 feet of the contaminated equipment for more than a few seconds. This MOPP level provides personnel the maximum protection from the chemical agent as it transitions from a contact and vapor hazard to a vapor hazard only.

10.5.10.2. Follow-on Phase. In the follow-on phase, personnel will use gloves of a sort (i.e. leather, rubber, cloth, etc.) when operating on or handling the contaminated equipment. Although a contact hazard is unlikely, relatively small amounts of the agent may still be present. The use of gloves will ensure that unnecessary bare skin contact with agent residue is avoided.

10.5.10.3. **Table 10 2** shows "estimated" times associated with initial and follow-on phases of the 10/50-foot rule. To simplify response processes, commanders may choose to use the worst case scenario as the foundation for all 10/50-foot rule actions, i.e., 24 hours for the initial phase and all periods of time greater than 24 hours for the follow-on phase.

Table 10.2. Ten-Foot Rule Time Standards (Source: AFMAN 10-2503).

“10/50 Foot Rule” Time Standards*		
Agent	**Initial Phase**	**Follow-on Phase**
HD	0-12 HRS	Greater than 12 hrs
GB	0-12 HRS	Greater than 12 hrs
GD, GF, GA	0-18 HRS	Greater than 12 hrs
VX, R33	0-24 HRS	Greater than 24 hrs
* Rule is based on expected contamination on an airbase following a chemical attack. Adjust times if agent concentration is higher than expected.		

Chapter 11

NAVIGATION PROCEDURES

11.1. General. This chapter establishes procedures and requirements for worldwide enroute C-130 navigation. It is to be used in conjunction with procedures and requirements set forth in AFI 11-202V3, AFI 11-217, and FLIP. Since airspace and associated navigational aid equipment capability are rapidly evolving, aircrews must maintain an in depth knowledge of current requirements/policies.

11.1.1. Prolonged Loss of Contact. Aircrews must ensure they are following proper navigation crosscheck procedures to maintain airspace situational awareness.

11.1.1.1. Aircrews will use navigation charts to identify radio frequency changeover points to minimize the likelihood of prolonged loss of communication with ATC/radio operators. Additionally, crews must monitor both VHF and UHF Guard to the maximum extent possible.

11.1.1.2. In the event of known or suspected loss of two-way radio capability, follow the communications failure procedures published in the FIH.

11.1.1.3. In cases of suspected loss of contact with ATC, attempt to reestablish contact using other aircraft to relay messages to ATC controllers.

11.2. Operations in International/Territorial Airspace. (See FLIP, GP, DOD 4500.45G FCG, and AP, for further guidance). US Military aircraft and DOD personnel entering another nation to conduct US government business must have the approval of the foreign government concerned to enter their airspace. Foreign clearances for US international air operations are obtained through US officials known as Defense Attache Officers (DAO).

11.2.1. There are essentially two types of airspace: international airspace and territorial airspace. International airspace includes all airspace seaward of coastal states' territorial seas. Military aircraft operate in such areas free of interference or control by the coastal state. Territorial airspace includes airspace above territorial seas, archipelagic waters, inland waters, and land territory, and is sovereign airspace. Overflight may be conducted in such areas only with the consent of the sovereign country.

11.2.2. Consistent with international law, the US recognizes sea claims up to 12NMs. Diplomatic constraints and/or a lack of diplomatic clearances usually result in missions operating in international airspace. Therefore, sufficient information must be provided far enough in advance to allow compliance with DOD 4500.45G FCG requirements established by the countries concerned. The US does not normally recognize territorial claims beyond 12NMs; however, specific guidance from certain US authorities may establish limits, which differ from the standard.

11.2.3. Flight Information Region (FIR). A FIR is an area of airspace within which flight information and related services are provided. An FIR does not reflect international borders or sovereign airspace. Aircraft may operate within an established FIR without approval of the adjacent country, provided the PIC avoids flight in territorial airspace.

11.2.4. Aircrews on a flight plan route, which takes them from international airspace into territorial airspace, for which approved aircraft clearances were obtained, should not amend entry point(s).

11.2.5. Violations of foreign sovereignty result from unauthorized or improper entry or departure of aircraft. Aircrews should not enter into territorial airspace for which a clearance has not been duly requested and granted through diplomatic channels.

11.2.6. ATC agencies are not vested with authority to grant diplomatic clearances for penetration of sovereign airspace where prior clearance is required from the respective country. Aircraft clearances are obtained through diplomatic channels only.

11.2.7. In the event ATC agency challenges the validity of a flight routing or attempts to negate existing clearances, PICs must evaluate the circumstances. The normal response will be to attempt to advise the ATC agency that the aircraft will continue to planned destination, as cleared in international airspace. The key phrase is "in international airspace." Safety of flight is paramount in determining mission continuation. Under no circumstances should aircrews construe a clearance, which routes their mission over sovereign airspace, which was not approved through diplomatic channels before mission departure, as being valid authorization.

11.2.8. Aircrews operating missions requiring unique or specially developed routing will normally be briefed at home station, onload station, and/or by the last C2 facility transited before performing the critical portion of the mission.

11.2.9. Aircrews normally are not tasked to and will not fly "due regard" routings unless coordinated with the appropriate MAJCOM C2 and specifically directed in the mission FRAG. The "due regard" or "operational" option obligates the military PIC to be their own ATC agency to separate their aircraft from all other air traffic. If operational requirements dictate, PICs may exercise the "due regard" option to protect their aircraft. Aircraft will return to normal air traffic services as soon as practical. Refer to FLIP GP for additional guidance on due regard.

11.3. Navigation Databases / Flight Plan / Data Verification.

11.3.1. The PIC and navigator will jointly verify routing, altitude, and fuel load prior to departure. On flight managed sorties, the PIC and the navigator will review the flight plan provided by the Flight Manager (FM). Any disagreements/discrepancies/requests for change will be coordinated with the FM. Navigator crew changes (engine running crew change or augmented crews) will include, as a minimum, a briefing on equipment status.

11.3.2. When practical, plan the most direct routing possible or utilize wind optimized CFP routing to enhance fuel conservation.

11.3.3. A MAJCOM-approved CFP, AF IMT 70, or AF Form 4116 *C-130 Navigator Flight Plan and Log* is required for all flights except local area training flights with an established standard procedure. A copy of the navigator's flight plan will be provided to the copilot to verify routing and aid in position reporting.

11.3.4. A fuel plan is required for all flights except routine local area training flights where the fuel requirement has been verified.

11.3.5. The navigator will sign in the indicated block on page 2 of the AF Form 4116 to certify accuracy of all entries. Any entries not required for a particular mission on the AF Form 4116 may be left blank.

11.4. Master Flight Plan / Plotting Chart.

11.4.1. **Flight Planning.** General instructions for completion of AF Form 4116 are provided in this section. MAJCOM-approved computer flight plans may be used as a substitute for AF Form 4116.

11.4.1.1. The AF Form 4116 was developed to provide a tool for all possible missions of the C-130. Most missions will not require all sections of the Form. In the interest of conservation navigators are encouraged to print and use only those sections of the AF Form 4116 required for their respective mission.

11.4.1.2. Most entries on the AF Form 4116 are self-explanatory or explained below.

11.4.1.2.1. HIGHEST ACC FL - Highest Acceptable Flight Level. This altitude is obtained from the appropriate aircraft performance manual.

11.4.1.2.2. WPT - Waypoint. Use this column to indicate the number of each waypoint as entered in the aircraft computer.

11.4.1.2.3. A/B - Ahead or Behind. Compare ETA based on the original flight plan to actual time of arrival (ATA) at each waypoint. Record the difference in this column. If the flight plan changes in-flight, non-applicable ATA spaces may be left blank.

11.4.1.3. When an alternate destination is required, use a flight planning line to indicate, as a minimum, the name of the alternate and the time, course, and distance to the alternate.

11.4.1.4. Aircrews may use ACFP, PFPS or any other MAJCOM approved flight planning program. On a flight managed sortie, the FM uses AMC certified ACFP to create the CFP.

11.4.2. **Equal Time Point Computations.** During mission planning for all oceanic sectors, crews are required to calculate an ETP. Use the worksheet on the AF Forms 4116, page 2 to calculate the time to the ETP.

11.4.2.1. First Suitable Airfield (FSAF) and Last Suitable Airfield (LSAF) are used in the ETP calculation. These are represented as the First Nearest and the Last Nearest airports in the ETP calculation. They are airports closest to the coast out and coast in waypoints that meet applicable destination alternate requirements except weather. Forecast weather conditions for LSAF/FSAF (ETA +/- 1 Hour) will meet or exceed minimums for the lowest compatible approach or 500/1, whichever is greater.

11.4.2.2. Computations are required on Category I routes or Category I portions of routes when the total time between the last suitable airfield (LSAF) and the first suitable airfield (FSAF) is three hours or more. (see **Figure 11.1**).

11.4.2.3. Re-compute ETP in-flight when the actual time of arrival at a reporting point is 15 minutes or more ahead or behind the planned time if the change was caused by erroneous wind information.

11.4.2.4. Additional guidance on calculating an ETP can be found on the AMC/A3V web page in the Pubs section: **https://private.amc.af.mil/a3/a3v/publications.aspx**; under Miscellaneous Documents.

11.4.3. **Charts.** The navigator will flight follow on all missions using a suitable plotting chart (JNC, JNCA, or GNC). On missions that do not require plotting fixes, for situational awareness only, navigators may use FalconView moving map in lieu of printed charts.

11.4.3.1. Show the following items on the chart:

11.4.3.1.1. Navigator‘s name and coordinated universal date. Chart number and edition will be annotated on a stripped chart.

11.4.3.1.2. Flight plan course line and waypoints (if not pre-labeled) will be annotated with waypoint number, identifier, radial and DME, or latitude and longitude.

11.4.3.1.3. Annotate suitable emergency airfields. Optimum emergency airfields are located within 50 NM of the intended route. Refer to the GDSS/ASRR for suitability.

11.4.3.1.4. Portions of Air Defense Identification Zones (ADIZ)/FIR boundaries (if not depicted accurately) pertinent to the route will be annotated.

11.4.3.1.5. Annotate the approximate location of the ETP.

11.4.3.2. Plot each fix or position along with the time at that position. Use standard symbols from AFPAM 11-216, *Air Navigation*.

11.4.3.3. In the interest of conservation, flight charts for high level missions may be reused whenever such reuse would not affect plotting accuracy of fixes or position determination.

11.4.3.4. FalconView produced Lambet-Conformal charts may be used.

11.4.3.5. On approach or departure, the navigator will monitor the aircraft position using an appropriately scaled chart (TPC, JOG, etc). Use the chart updating manual or host nation chart updating product to update charts within 10-NM of the approach, departure, emergency and divert bases for airfields without a DOD or an approved Jeppesen approach plate. FalconView generated charts with updated ECHUM overlays fulfill this requirement.

11.4.3.5.1. In IMC or at night, the navigator will use all available navigational aids (including aircraft radar) to keep the aircraft clear of all obstructions.

11.5. Navigation Capability / Airspace Requirements.

11.5.1. MNPS standards are established in FLIP. ***NOTE:*** Airspace and associated navigational aid equipment capability are rapidly evolving. Pilots must maintain an in depth knowledge of current FLIP requirements/policies.

11.5.1.1. Aircraft that lose required equipment prior to oceanic airspace will return to the nearest maintenance repair facility.

11.5.2. Reduced Vertical Separation Minimum (RVSM) Airspace. Airspace where RVSM is applied is considered special certification airspace. Both the operator and the specific aircraft

type must be approved for operations in these areas. Pilots will refer to FLIP AP/2 and the following for RVSM requirements:

11.5.2.1. Both pilots' altimeters, at least one autopilot, the altitude advisory system, and the transponder, must be fully operational. The PIC will request a new clearance to avoid this airspace should any of this equipment fail.

11.5.2.2. Engage the autopilot during level cruise, except when circumstances such as the need to re-trim the aircraft or turbulence require disengagement.

11.5.2.3. Crosscheck the altimeters before or immediately upon coast out. Record the readings of both altimeters.

11.5.2.4. Continuously crosscheck the primary altimeters to ensure they agree ± 200 feet.

11.5.2.5. Limit climb and descent rates to 1,000 feet per minute when operating near other aircraft to reduce potential TCAS advisories.

11.5.2.6. Immediately notify ATC if any of the required equipment fails after entry into RVSM airspace and coordinate a plan of action.

11.5.2.7. Document in the aircraft forms malfunctions or failures of RVSM required equipment.

11.5.3. Required Navigation Performance (RNP) Airspace. Airspace where RNP is applied is considered special qualification airspace. RNP airspace is being incorporated around the world to increase air traffic capacity by decreasing separation requirements between routes. Pilots will immediately notify ATC if any of the required equipment fails after entry into RNP-10 airspace and coordinate a plan of action. Document in the aircraft forms malfunctions or failures of RNP required equipment. C-130 aircraft is approved for RNP operations only with a qualified navigator at the navigator's station, but limited to operational time restrictions based on the navigation equipment.

11.5.3.1. RNP-10. C-130 aircraft may operate up to 6.2-hours (after entering the NAV mode in SCNS) of flight in RNP-10 airspace without an update. If an automatic update is made, the aircraft may continue for an additional 5.7 hours in RNP-10 airspace after the update is complete. If a manual update (Radar update, etc) is made, the aircraft may continue for an additional 5.2 hours in RNP-10 airspace after the update is complete.

11.5.4. Basic Area Navigation (BRNAV) Airspace. Airspace where BRNAV is applied is considered special qualification airspace. BRNAV navigation accuracy criteria is RNP-5. Pilots will immediately notify ATC if any of the required equipment fails after entry into BRNAV airspace and coordinate a plan of action. Document in the aircraft forms malfunctions or failures of RNP required equipment. C-130 aircraft are approved for BRNAV operations only with a qualified navigator at the navigator's station.

11.6. Enroute / Flight Progress.

11.6.1. The navigator will monitor the primary command radio unless directed to do otherwise. The navigator will record ATC clearances and monitor the read back. This will normally include all ATC instructions involving departure, en-route, and approach procedures. This procedure is not applicable when ATC instructions require immediate

execution by the pilot, or when such action interferes with the timely performance of other time-sensitive navigator duties.

11.6.2. Compute a TAS check on all Category I routes of three hours or longer. Use the procedures in **paragraph 11.11**.

11.6.3. Maintain a flight log on Category I routes or route segments of three hours or longer. Time between fix/MPP plots will not exceed 1 hour. ***NOTE:*** Malfunctions or loss of navigational capability, which degrade course centerline accuracy, will be reported immediately to ATC.

11.6.4. On Category I routes, when the time between the LSAF and FSAF is 3-hours or more, the following procedures are required: wind factors, ETP calculations, and in-flight fuel management.

11.6.5. Heading deviation checks are not required on Category II routes, tactical routes, or on aircraft without compasses. On Category I routes or route segments of 3-hours or longer, compute heading deviation for each compass system as soon as practical after initial level-off or coast out. Record the deviation for all compass systems (see **paragraph 11.10**).

11.7. Laptop Computers. Laptop computers running FalconView moving map software and connected to a handheld GPS provide invaluable situational awareness. Laptop computers and handheld GPS must be approved for unrestricted use in flight IAW AFI 11-202V3.

11.7.1. Navigators should carry a USAF approved laptop on all missions.

11.7.1.1. Handheld GPS units should be connected and the FalconView Moving Map Display should be operating.

11.7.2. Laptop computers with handheld GPS FalconView moving map displays will not be used as the primary source of navigation.

11.8. Flight Records. Flight progress will be recorded for Category I routes of 3-hours or longer. Record enough detail to reconstruct the mission. Units may publish local standards for log procedures in the unit supplement. See **Figure 11.2** for an example of a completed AF Form 4116.

11.8.1. This form will consist of planning and in-flight progress data. It will be completed in sufficient detail to fully evaluate or reconstruct the flight. Page 1 of the form will be completed when a CFP is not available on Category I routes. Section IX, In-Flight Data, will be used to record present positions and spot readings. The procedures below are general in nature and designed to accommodate a wide range of C-130 navigation equipment configurations.

11.8.1.1. As soon as practical after level-off or coast-out, whichever occurs latest, navigators will verify aircraft position by either navigation aid fix or radar fix.

11.8.1.1.1. Record the fix in AF Form 4116 Section VIII, Radar/NAVAID Data.

11.8.1.1.2. At the time of the fix record the primary navigation solution and corresponding deltas (or Lat/Long) for all other navigation solutions in AF Form 4116 Section VI, Fix/Computer Position.

11.8.1.1.3. At the time of the fix record, as a minimum, GMT, present position, true heading, spot w/v, TAS, altitude and ETA to the next waypoint in AF Form 4116 Section IX, In-Flight Data.

11.8.1.2. After coast out, record current position every 30 minutes on AF Form 4116 Section VI, Fix/Computer Position.

11.8.1.2.1. Record the present position for the primary navigation solution.

11.8.1.3. Plot the current position every hour or within 10 minutes of crossing an oceanic reporting point, whichever occurs first.

11.8.1.3.1. Record the GMT, current position of the primary navigation system, true heading, spot w/v, TAS, altitude, ETA to the next waypoint, and corresponding deltas (or Lat/Long) for all other navigation solutions.

11.8.1.4. Between recorded positions, record spot readings at regular intervals to allow for calculating a DR in the event of a navigation system failure.

11.8.1.4.1. As a minimum, spot readings will include: time, heading, drift angle, ground speed, spot w/v. The # block is used for spot TAS or for averaging computations.

11.8.2. In the event of a navigation system failure (INU or GPS) full log procedures will be implemented. If the navigation system failure is resolved, the navigator may resume log procedures as outlined in **paragraph 11.8.1**.

11.8.2.1. Beginning at the last plotted position, compute a Dead Reckoning (DR) up to the present position. A DR associated with the fix/MPP will be plotted on the chart prior to plotting the position. The DR line will consist of: the GMT of the DR, averaged ground speed, averaged true airspeed, averaged compass heading, and averaged drift correction. Spin elapsed time versus ground speed to obtain total ground distance. Work back from the average compass heading to obtain the true course. Plot the DR using true course and ground distance.

11.8.2.2. Plot a fix/MPP at a minimum of once per hour. At the time of the fix/MPP record the GMT, current position, true heading, spot w/v, true air speed, altitude and ETA to the next point.

11.8.2.3. Alter Heading (A/H) lines are optional. If used, record the GMT, true course worked forward to obtain a compass heading, spot w/w, spot drift, true airspeed, and ground speed.

11.8.2.4. As soon as practical prior to coast-in, navigators will verify aircraft position by either navigation aid fix or radar fix.

11.9. Celestial Procedures.

11.9.1. See AFPAM 11-216 for a comprehensive discussion of celestial concepts.

11.10. Deviation Check Procedures.

11.10.1. Heading checks should be computed in Section V of AF Form 4116. Mid-time celestial heading checks may be recorded in the Section X. When a heading check is performed based on INS/SCNS, note that in the pre-comp area of the deviation checks

section. The AF Form 4116 deviation checks format solves for "deviation" (DEV) for all heading reference systems. Some navigation computers such as the SCNS allow the navigator to input compass “deviation.” In this case reverse the sign of the calculated “deviation” to arrive at “deviation correction” , which is then inputted into SCNS.

11.10.1.1. Compass deviation is not necessarily constant over time or after significant course changes. Navigators will reconfirm deviation on Category I legs every 3 hours or after planned course changes of greater than 30 degrees.

11.10.1.2. A deviation check is not required on flights transiting Category I routes of less than three hours if:

11.10.1.2.1. The aircraft is equipped with two or more operable heading systems (the standby compass is not considered a system for this requirement).

11.10.1.2.2. The difference between systems does not exceed 2-degrees.

11.10.2. Dual INS Heading Checks. Deviation check not required.

11.10.3. Single INS/SCNS Heading Checks. Record and compare the INS/SCNS true heading with all compass systems.

11.10.4. In order to obtain an accurate celestial heading check, the exact ZN must be derived. Exact ZN is obtained by interpolating using exact longitude, latitude, declination, and LHA. ZN may also be derived from SCNS immediate page and the subpoint of the celestial body used for the heading check.

11.11. True Airspeed (TAS) Check Procedures.

11.11.1. Accomplish within one hour of initial cruise altitude. Record the time of the check and the altitude on the pressure altimeter. If using free air temperature gauge, record indicated outside air temperature (IOAT). Use the heat of compression table on AF Form 4116 to convert IOAT to true outside air temperature (TOAT). If using SCNS temperature, record TOAT.

11.11.1.1. TAS check not required for C-130H3 aircraft.

11.11.2. Normally, navigators on all C-130 models can use 0 knots for indicated airspeed (IAS) to calibrated airspeed (CAS) correction and minus 3 knots for CAS to equivalent airspeed (EAS) correction for TAS above 270 (or minus 2 knots if less than or equal to 270).

11.11.3. ITAS - Indicated TAS. Record the TAS reading from the TAS meter and the SCNS/INS or other computer (if the aircraft is so equipped). Record the difference between computed TAS and this reading in the CORR block.

11.12. In-flight Fuel Management Procedures.

11.12.1. Record the fuel readings listed below at level off time and regular time intervals (coinciding with entries on aircraft performance record), not to exceed 1 hour and 30 minutes. Use section VII, In-flight Fuel Management of the AF Form 4116 to complete in-flight fuel management computations.

11.12.1.1. ETA DEST. Best known arrival time at destination.

11.12.1.2. TIME. Time of the fuel reading.

11.12.1.3. TERMINAL FUEL FLOW.

11.12.1.4. CURRENT FUEL FLOW.

11.12.1.5. AVG FUEL FLOW. Calculate by adding terminal fuel flow to current fuel flow and dividing the sum by 2.

11.12.1.6. FUEL REM. Fuel quantity at time of calculation. In the interest of safety, use the lower of the calculated or gauge fuels.

11.12.1.7. O/H FUEL. Required overhead fuel (item 12 of the fuel plan).

11.12.1.8. DIFF. Subtract O/H Fuel from FUEL REM.

11.12.1.9. FUEL ETE. Calculate using formula in **paragraph 11.12.2.3**.

11.12.1.10. ETE DEST. Subtract TIME from ETA DEST.

11.12.1.11. EXT TIME. Subtract ETE DEST from FUEL ETE. Report this value to the pilot. If this is a negative value, check the computation and values for errors. If they are correct, evaluate your destination options.

11.12.2. Use the following formulas to accomplish in-flight fuel management:

11.12.2.1. [(Terminal fuel flow + Present fuel flow)] / 2 = Average Fuel Flow

11.12.2.2. Present fuel - Overhead fuel = Usable Fuel

11.12.2.3. Usable fuel / Average fuel burn rate = Fuel ETE

11.12.2.4. Fuel ETE - ETE to destination = Extra Time

11.12.3. AF IMT 4125, *Range Control Chart* may be used for in-flight fuel management.

11.12.3.1. Manual Construction. (**Figure 11.4**)

11.12.3.1.1. "POINT NUMBER" represents the approximate level-off point (initial cruise altitude), 25, 50, 75, and 100 percent of the flight plan distance as indicated on AF Form 4116 or CFP.

11.12.3.1.2. To compute Column A, "ENROUTE FUEL":

11.12.3.1.2.1. Record in Block 1 (L/O) the AF Form 4116 Block 7. Takeoff Fuel.

11.12.3.1.2.2. Divide the AF Form 4116 Block 1. Enroute Fuel by 4 and record that number in each -25% Enroute block.

11.12.3.1.2.2.1. Optionally, a more accurate method is to compute the fuel at each point and subtract them to obtain the enroute fuel burn between each point. Put this number in the corresponding -25% Enroute block. This method takes into account the initial higher burn rates.

11.12.3.1.2.3. Subtract this number going down the chart to obtain the enroute fuel at each point. (e.g. 1. L/O - 25% Enroute Block = 2 (25%) enroute fuel, etc.)

11.12.3.1.2.4. The destination block will be takeoff fuel minus the full enroute fuel.

11.12.3.1.3. To compute Column B, "MINIMUM FUEL":

11.12.3.1.3.1. Record in Block 5 Dest the AF Form 4115 Block 12 Required Overhead Destination Fuel.

11.12.3.1.3.2. Divide the AF Form 4116 Block 1. Enroute Fuel by 4 and record that number in each 25% Enroute block.

11.12.3.1.3.2.1. Optionally, a more accurate method is to compute the fuel at each point and subtract them to obtain the enroute fuel burn between each point. Put this number in the corresponding -25% Enroute block. This method takes into account the initial higher burn rates.

11.12.3.1.3.3. Add this number going up the chart to obtain the minimum fuel at each point. (e.g. 5. Dest + 25% Enroute Block = 4 (75%) min fuel, etc.)

11.12.3.1.3.4. This fuel is the minimum, at each given point, to fly from that point to destination with sufficient fuel to make a missed approach (if required), continue to the destination alternate, hold, make the planned approach, and land with 4,000 pounds of fuel. Minimum fuel will also include any identified extra fuel needed overhead the alternate (e.g., excess holding, for succeeding legs, etc.).

11.12.3.1.3.5. Column C, "DISTANCE": The flight plan distance for the given points listed in **paragraph 11.12.3.1.1**, obtained from AF Form 4116. This can be graphically depicted as either distance flown or distance remaining.

11.12.3.1.3.6. "DISTANCE FLOWN/REMAINING": Label the nautical miles to the destination along the horizontal scale. For distance flown, start with 0 at the left and allow the major blocks to represent convenient increments of mileage. The distance scale should be expanded to the maximum to give as large a presentation as possible.

11.12.3.1.3.7. Draw a vertical line on the graph representing total distance to destination and label this line with the destination name. If required, plot vertical lines representing ETPs at the appropriate distance flown/remaining.

11.12.3.1.3.8. Estimated Performance Line. Estimated performance is based on planned fuel at T/O, level off, and arrival plotted column A versus distance in column C. The difference between the estimated performance line and the minimum arrival line is contingency and identified extra fuel.

11.12.3.1.3.9. Minimum Arrival Fuel Lines. A "minimum arrival" line will be constructed by plotting fuel in column B versus distance in column C.

11.13. Airborne Radar Approach Procedures.

11.13.1. VFR Operations. Units will construct VFR ARA approaches IAW AFI 11-230, *Instrument Procedures*, and submit VFR ARA approach plates for approval to OG/OGV. During VFR, the minimum ceiling and visibility will be 1,500 feet and 3 miles. VFR cloud clearances will be maintained at all times while performing VFR ARAs. Publish approved VFR ARA approaches in local supplements. The local supplement should include SCNS ARA input data. If available, pilots will back up the navigator using a published instrument approach.

11.13.1.1. Navigators will load LZ information into the SCNS for all NVG airland operations. Navigators may modify existing approaches to meet this requirement. Units should publish local procedures in the unit supplement to this AFI.

11.13.1.1. **(911AW)** 911 AW VFR ARA/SCA Approaches and SCNS data are published in the 911 AW Tactical Aircrew Flimsy.

11.13.2. IFR Operations. Crews are only authorized to perform ARAs in IMC with a valid TERPS'd approach. Weather minimums will be established by the approach, but will be no lower than 500-feet and 1 mile (300-feet and 1 mile for AWADS certified crews).

11.13.3. Planning and Coordination. Prior to entering the terminal area, the navigator will coordinate the following items with the PF:

11.13.3.1. Desired pattern altitudes and headings.

11.13.3.2. Distance on final where descent will commence.

11.13.3.3. Glide slope angle and initial rate of descent (normally not greater than 400-feet per NM). Refer to **Figure 11.3** for descent rate examples.

11.13.3.4. Minimum descent altitude and missed approach point/procedures. Missed approach will conform to published procedures for a useable approach, if able.

11.13.4. Terminology and Procedures.

11.13.4.1. Pattern Control. The navigator will advise the PF when positive radar identification of the airfield complex is made.

11.13.4.2. The navigator will direct the aircraft by headings to the final approach course. For AWADS equipped units, navigators may advise the PF to intercept the bank steering bar (as required), when flying computer ARAs.

11.13.4.3. During the approach, the navigator will advise the PF of the drift and groundspeed. If PFs can view this information on the selected SCNS/INS display, this advisory is not required.

11.13.4.4. The turn onto base leg (if required) should be made to allow for a 10 NM final (or as required).

11.13.4.5. The navigator will state the distance from touchdown each mile from the end of the runway beginning 10-miles out. A glide path warning should be given 10 seconds prior to the "begin descent point."

11.13.4.6. The navigator will give heading information at least every nautical mile during the final approach.

11.13.4.7. Use **Chapter 5** procedures for required non-precision approach calls upon reaching the MDA.

11.13.4.8. AWADS-equipped units are authorized to perform computer ARAs using AWADS equipment in VMC or IMC according to **paragraph 11.13.1** and **paragraph 11.13.2** One OAP will be active on the radar until the field is called in sight.

11.14. Grid Procedures.

11.14.1. Definitions and formulae. See AFPAM 11-216.

11.14.2. Grid Log. The navigator will use page 6 of the AF Form 4116 when grid navigation procedures are required. Block entries are as follows:

11.14.2.1. Time. Time of celestial heading/system heading observation.

11.14.2.2. TH. Observed/computed true heading.

11.14.2.3. CA/LONG. Enter +W -E longitude (polar chart) or convergence angle.

11.14.2.4. GH. Observed/computed grid heading.

11.14.2.5. GYRO #1, GYRO #2. On aircraft equipped with two independent gyro stabilized systems with numbers corresponding to aircraft systems (e.g. C-12 No. 1, N-1 No 2), circled number denotes the primary steering gyro. On aircraft whose systems are not numbered or do not correspond to the aircraft system, identify the primary steering gyro in "REMARKS".

11.14.2.6. GR. Gyro reading. Record the reading from the primary compass.

11.14.2.7. PREC. The amount of precession since the last heading shot (period precession): GH - GR = PREC.

11.14.2.8. RATE/CUM. The hourly precession rate based upon the precession indicated at the time of observation. Precession rate is derived from the period precession and the applicable elapsed time period (since the last compass reset). Example: 2 degrees precession in 40 minutes equals a 3 degrees/hour precession rate. This entry is required only when period precession is greater than one degree. The cumulative portion of the block is used for tracking the cumulative precession rate once a false latitude has been set.

11.14.2.9. LAT. The mid-latitude between the current observation and the next proposed observation.

11.14.2.10. FALSE LAT. The false latitude setting being used to eliminate precession. This entry is required only when a false latitude setting is used.

11.14.2.11. RESET. Whenever a gyro is reset, place a check mark in this block.

11.14.2.12. GC. Measured grid course to the next checkpoint.

11.14.2.13. DRIFT. The number of degrees (+ or -) of drift.

11.14.2.14. DGH. Desired grid heading. Apply anticipated DRIFT to GC.

11.14.2.15. RT/2 CORR. See formula on the bottom of the AF Form 4116.

11.14.2.16. IGH. Initial grid heading. Used for alter heading.

11.14.2.17. GRID ENTRY. Apply grivation (GRIV) to Magnetic Heading (MH) to obtain desired grid heading (DGH); or apply (LONG) or convergence angle (CA) to True Heading (TH) to obtain DGH. See formulas on the AF Form 4116.

11.14.2.18. GRID EXIT. Apply GRIV to DGH to obtain MH; or apply LONG or CA to DGH to obtain TH. See formulas on the AF Form 4116.

11.14.3. Grid Celestial Computations:

11.14.3.1. When plotting celestial lines of position (LOPs) in grid reference, apply longitude (polar chart) or convergence angle to the true azimuth and plot the grid azimuth.

11.14.3.2. When taking heading checks at high latitudes, it is advisable to place data into the periscopic sextant to give the true heading and convert this heading to grid by applying the assumed LONG/CA.

11.14.4. Construction and use of the ZN graph is optional. The ZN graph is based upon the route of flight and dead reckoning. See AFPAM 11-216 for construction procedures.

11.14.5. Departure Requirements:

11.14.5.1. Polar true/grid courses as reflected in FLIP terminal charts will be used for departures in polar areas. Before takeoff, visually align the aircraft with the runway heading and set the polar true/grid course of the runway in the aircraft's directional gyros. The navigator will set applicable systems in gyro mode with the correct latitude set.

11.14.5.2. After reaching flight altitude, determine the polar true grid heading and reset the primary and secondary gyros. The type of chart being used will determine whether the heading will be polar grid heading or convergence grid heading.

11.14.6. Enroute Requirements:

11.14.6.1. The Grid Entry/Exit section of the AF Form 4116 will be completed prior to heading reference changes. When entering grid operation, spot grivation should be applied to the computed magnetic heading to obtain DGH. The aircraft will be established on the computed magnetic heading prior to resetting the heading references. When exiting grid, the computed magnetic headings will be the target heading when the compass systems are reset. In both cases, the computed magnetic headings will be compared to the flight plan to verify the accuracy of the courses measured and conversion data used. This will ensure the validity of initial entry headings and provide precise target headings for exit.

11.14.6.2. Normally, the grid heading will be checked each 30-minutes after grid entry. If the compasses are precessing 3 degrees per hour or less, hourly checks may be obtained after the first hour. ***NOTE:*** On aircraft with reliable SCNS/INS, if the SCNS/INS heading is within 2 degrees of the initial celestial-derived grid heading, the SCNS/INS may be used to determine gyro precession.

11.14.6.3. Determine the precession information for each gyro after each heading check. When a gyro’s precession is greater than 1 degree, reset the gyro to correct grid heading. When the period precession is 1 degree or less, the navigator may either reset the gyro or treat the precession as zero.

11.14.6.4. Whenever the period precession is greater that 1 degree (optional for 1 degree or less), the hourly precession rate may be removed by use of a false latitude setting. When the combined earth rate and gyro precession are less than +15 degrees/hour, the false latitude setting will totally compensate for precession. Two considerations are necessary:

11.14.6.4.1. Predicted precession becomes zero.

11.14.6.4.2. It may be necessary to adjust previous DR and air plot positions if the precession rate changes at subsequent heading checks. If this occurs, adjustments normally will be small and have negligible effect on DR and air plot accuracy; however, the effect should be considered.

11.14.6.5. To determine false latitude correction, enter the earth rate table with the desired latitude and extract the tabulated earth rate value. Algebraically combine the earth rate value and the observed hourly precession rate (use cumulative precession rate once a false latitude has been set). Re-enter the earth rate table with the combined value and extract the corresponding false latitude.

11.14.6.6. Only 15 degrees/hour can be removed by a false latitude setting. When the sum of earth and primary gyro precession rates exceeds +15 degrees, the navigator must artificially steer the aircraft (in effect, the aircraft will fly a gentle arc) to compensate for the amount of precession in excess of +15 degrees/hour. The formula used to correct the DGH to an initial grid heading (IGH) to fly appears on the AF Form 4116 as "RT/2 CORR" (note that the formula produces a correction, so the precession rate must be given its opposite sign). The precession rate used in the formula must be adjusted to reflect the time period in the DR ahead. When "carrying" precession as suggested above, the navigator should consider several aspects of the navigational problem. ***NOTE:*** When precession exceeds 15 degrees per hour, consider the compasses unusable.

11.14.6.6.1. If alter headings are not made at heading check times, precession will have accumulated by alter heading times and a correction (opposite sign of precession) should be applied to the IGH using the total precession correction portion of the AF Form 4116.

11.14.6.6.2. If the precession rate changes at subsequent heading checks, it may be advisable to adjust previous DR and air plot positions described at **paragraph 11.5.7.6**.

11.14.7. Miscellaneous Procedures:

11.14.7.1. Normally, when changing charts or crossing the 180 degree meridian, only the reference changes; the heading of the aircraft is not altered. The change is made by comparing the grid courses and applying the difference to the gyro reading (old chart GC 350 degrees; new chart GC 331 degrees; GR 353; 350 - 331 = 019 = 334; reset the gyro to read 334).

11.14.7.2. Do not use the combined rhumb line/coriolis correction when flying DG. Use only coriolis correction for celestial observations.

11.14.7.3. Always recheck computations and formulas when a radical change in precession is observed.

11.14.7.4. Grid qualified navigators will maintain proficiency in grid procedures.

Figure 11.1. ETP.

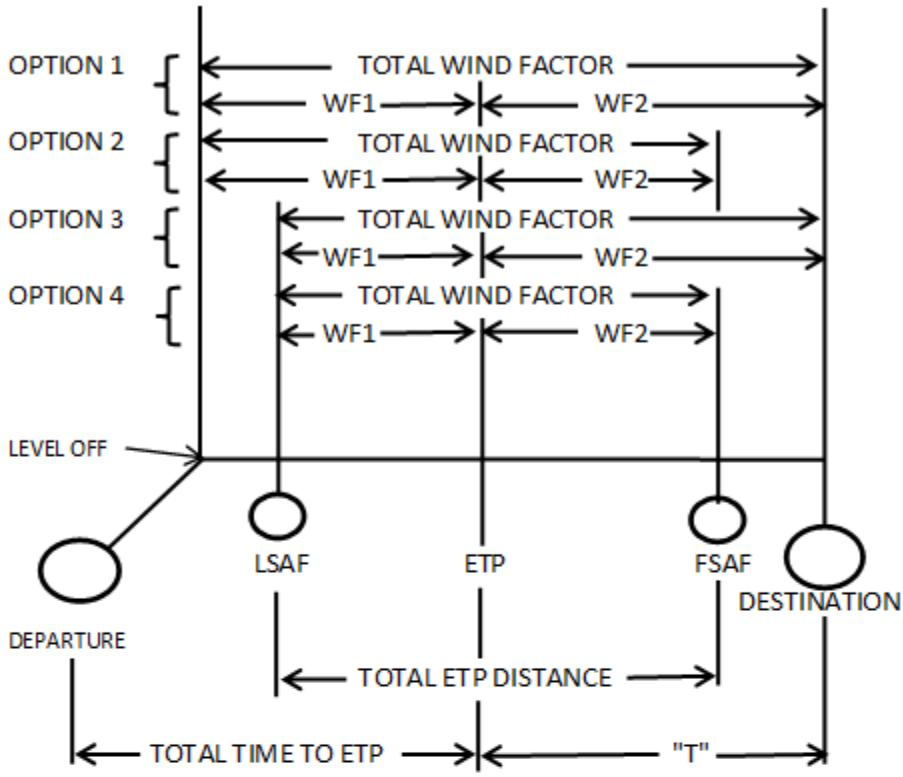

Computations.

1. WIND FACTOR COMPUTATION (USE OPTION 1, 2, 3 OR 4):

A. TOTAL WIND FACTOR:

$$\frac{\text{TOTAL WIND FACTOR DISTANCE}}{\text{TOTAL WIND FACTOR TIME}} = \text{AVERAGE GS}$$

B. FIRST HALF WIND FACTOR (WF 1):

$$\frac{\text{DISTANCE FROM BEGIN PT TO APPROX MID-POINT}}{\text{TIME FROM BEIGN PT TO APPROX MID-POINT}} = \text{AVERAGE GS}$$

AVERAGE GS – PLANNED AVERAGE TAS = WF 1

C. SECOND HALF WIND FACTOR (WF 2):

$$\frac{\text{DISTANCE FROM APPROX MID-POINT TO END PT}}{\text{TIME FROM APPROX MID-POINT TO END PT}} = \text{AVERAGE GS}$$

AVERAGE GS – PLANNED AVERAGE TAS = WF 2

2. ETP COMPUTATION

A. $$\frac{\text{TOTAL ETP DISTANCE (LSAF TO FSAF)}}{(\text{WF2} - \text{WF1}) + 2 * (\text{PLANNED AVG TAS})} = \frac{\text{“T” (TIME IN MIN FROM ETP TO FSAF)}}{60}$$

B. TIME (FROM DEPARTURE) TO ETP = TOTAL TIME TO FSAF - “T”

Figure 11.2. Example AF Form 4116.

C-130 NAVIGATOR FLIGHT PLAN AND LOG		I. FLIGHT DATA													
		AIRCRAFT COMMANDER: CAPT HANS O'BRICK									AIRCRAFT TAIL #: 64-0527				
		NAVIGATOR: LT BAG O'DONUTS									T/O TIME				
		DATE: 1 NOV 11					PARKING SPOT: G-4				PROPOSED: 1320				
		FROM: KCHS					TO: LPLA				ACTUAL: 1300				
WPT	TO	TAS / ALT	TC	WV / DA	TH	VAR	MH	GS	ZONE DIST	TOTAL DIST	ZONE TIME	TOTAL TIME	ETA	ATA	A/B
1 KCHS	N 32 53.92 / W 080 02.43												1300		
L/O		195 / →	076	260/12 / 0	076	7W	083	207	104	104	+30	+30	1330	1332	2B
2	N 33 32.80 / W 077 00.00	270 / 17.0	077	260/40 / -1	076	9W	085	309	52	156	+10	+40	1342	1341	1A
3	N 34 07.36 / W 074 06.03	✓ / ✓	077	✓ / 0	077	11W	088	309	152	308	+30	1+10	1411	1411	0T
4	N 34 37.60 / W 071 00.27	✓ / ✓	079	✓ / 0	079	13W	092	309	157	465	+31	1+41	1441	1440	1A
5	N 35 20.80 / W 067 58.83	✓ / ✓	074	✓ / -1	073	15W	088	309	155	620	+30	2+11	1511	1510	1A
6	N 36 38.32 / W 064 57.39	✓ / ✓	072	✓ / -1	071	16W	087	309	155	775	+30	2+41	1541	1540	1A
7	N 37 13.12 / W 059 54.99	✓ / ✓	075	✓ / -1	074	18W	092	309	252	1027	+48	3+29	1629	1629	0T
8	N 38 17.92 / W 053 04.59	✓ / ✓	079	✓ / 0	079	18W	097	309	332	1359	1+04	4+33	1733	1732	1A
9	N 38 43.84 / W 046 57.39	✓ / ✓	085	✓ / +1	086	17W	103	309	289	1648	+56	5+29	1829	1828	1A
10	N 39 05.44 / W 040 58.83	✓ / ✓	086	✓ / +1	087	16W	103	309	281	1929	+54	6+23	1923	1922	1A
11	N 38 56.80 / W 038 01.71	✓ / ✓	094	✓ / +2	096	15W	111	308	138	2067	+26	6+49	1949	1949	0T
12	N 38 56.80 / W 035 00.27	✓ / ✓	090	✓ / +1	091	14W	105	308	142	2209	+27	7+16	2016	2018	2B
13	N 38 43.84 / W 030 58.35	✓ / ✓	094	✓ / +2	096	12W	108	308	189	2397	+36	7+52	2052	2055	3B
14	N 39 22.72 / W 028 27.15	✓ / ✓	072	✓ / -1	071	12W	083	309	125	2522	+24	8+16	2116	2020	4B
15 LPLA	N 38 45.71 / W 027 05.45	✓ / ✓	120	✓ / +2	122	11W	133	309	74	2596	+16	8+32	2132	2135	3B
ALT LPAZ	N 35 58.28 / w 025 10.24	270 / 10	140	260/12 / 2	142	10W	152	275	141	2737	+31	9+02	2203		

II. FUEL/ETP PLANNING		
NAV: LT BAG O'DONUTS	OPERATING WT:	86.0
AC: CAPT HANS O'BRICK	CARGO/PAX WT:	14.0
TAIL #: 64-0527	RAMP FUEL:	55.0
DATE: 40848	RAMP WT:	155.0
CALLSIGN: REACH 4527	TAKEOFF WT:	153.7

	TIME	FUEL
1. ENROUTE	8+32	39.6
MEFF 3400 2. RESERVE (MEFF)	+45	2.6
3. CONTINGENCY (N/A AFSOC) 3. HOLDING (AFSOC Only)	+15	0.8
ALTERNATE + 4. MISSED APPROACH	+31	2.2
APPROACH/ 1.0/4.0 5. LANDING		5.0
IDENTIFIED 6. EXTRA		0.0
DEPRESSURIZATION 6A. FUEL		1.7
TOTAL (1 thru 6A) 7. TAKEOFF		51.9
1.3 8. TAXI		1.3
9. REQUIRED RAMP		53.2
10. ACTUAL RAMP	ENDURANCE 11+37	55.0
UNIDENTIFIED 11. EXTRA		1.8
MIN DIV OR (2+4+5+WRF) 12. REQ OVHD DEST		9.8

1. Note: Wing Relieving Fuel (WRF), when required, must be included as required overhead fuel in Block 12.
2. Note: The 4000 LB landing fuel should be included as part of any required WRF.
3. Note: AFSOC Only. Block 12, REQ OVHD DEST (2+3+4+5+WRF).

NAVIGATOR SIGNATURE

Joseph Bag O'Donuts, 1 Lt, USAF

CLIMB TEMP DEV: +05	CRUISE TAS	INIT CRUISE ALT	HIGHEST ACC ALT	DRAG INDEX
CRUISE TEMP DEV: +05	270	17.0	17.3	+17
TIME TO CLIMB (TTC)	DISTANCE TO CLIMB (DTC)		CLIMB TAS	FUEL TO CLIMB (FTC)
+30	93 NM		195	2450

ENROUTE FUEL COMPUTATION WORKSHEET

ZONE	GROSS WEIGHT	ALTITUDE	TIME	F/F PER ENGINE	F/F TOTAL	FUEL	ZONE FUEL
A CLIMB	153.7		TOTAL: 8+32				2.5
TTL CLIMB FUEL	- 2.5		TTC - 0+30				
B. START CRUISE	151.2	17.0	CRUISE TIME = 8+02	1230	4920	39.5	
CRUISE ZONE FUEL	- 39.5			D. AVG CRUISE FUEL FLOW	4620	37.1	+ 37.1
C. END CRUISE	111.7	17.0		1080	TFF 4320		TOTAL FUEL = 39.6

ETP CALCULATION

LSAF	MDPT		FSAF
KCHS	N 38 17	W 053 00	LPLA
DIST 1360	TIME 4+36	DIST 2597	TIME 8+32
- 91	- 30	- 1360	- 4+36
= 1269	= 4+06	= 1237	= 3+56
GS 310	WF1 +40	GS 315	WF2 +45

DIST (LSAF TO FSAF) (2597) T(286)MIN
(WF2-WF1) + 2(TAS) (545) = ^60

TOTAL TIME TO FSAF - T = TIME TO ETP
8+32 - 4+46 = 3+46

ETP METHOD (1) 2 3 4 (CIRCLE ONE)

DEPRESSURIZATION FUEL CALCULATION

ETP 'T' Time	4+46
x 1000 F/F Per Hour	4750
+ 30 min reserve (MEFF)	+ 1700
Depress Fuel Required	= 6450
- Total of Blocks 2+4	- 4800
Difference (Positive number will add to Block 6A)	1650

Notes:

IV. TAS CHECK

	1	2	3	4
TIME	1345	1510		
ALT (PA)	17.0	19.0		
IOAT	-6	-10		
TOAT	-14	-18		
IAS	207	200		
CAS	207	200		
EAS (-2 ≤ 270 < -3)	205	198		
TAS	269	270		
- ITAS	275	276		
CORR	-6	-6		
- COMP TAS	270	270		
CORR	-1	0		

STANDARD TEMPERATURE

ALT	TEMP	ALT	TEMP	ALT	TEMP	ALT	TEMP	ALT	TEMP
110	-7	160	-17	210	-27	260	-37	310	-46
120	-9	170	-19	220	-29	270	-39	320	-48
130	-11	180	-21	230	-31	280	-41	330	-50
140	-13	190	-23	240	-33	290	-43	340	-52
150	-15	200	-25	250	-35	300	-44	350	-54

HEAT OF COMPRESSION

TAS	TEMP	TAS	TEMP
190 - 210	-4	278 - 288	-9
211 - 230	-5	289 - 300	-10
231 - 246	-6	301 - 310	-11
247 - 263	-7	311 - 319	-12
264 - 277	-8	320 - 325	-13

V. DEVIATION CHECK

	1	2	3	4
TIME	1355	1630		
TH (INU)	076	075		
MAG VAR	+12.0W	+17.7W		
MAG HDG	088.0	092.7		
DEV	+0.5	+1.0		
NO. 1 CH	088.5	093.7		
DEV	-0.4	-1.7		
NO. 2 CH	087.6	091.0		
DEV	+8.0	+7.3		
STBY CH	096.0	100.0		
DEV	0	-0.2		
COMPUTER	088.0	092.5		

VII. IN-FLIGHT FUEL MANAGEMENT

	1	2	3	4	5	6	7	8	9
RETA DESTINATION	2132	2133							
TIME	1332	1430							
TERM FUEL FLOW	4.3	→							
FUEL FLOW	5.1	5.0							
AVG FUEL FLOW	4.7	4.7							
FUEL REMAINING	51.3	46.2							
MIN DIV/REQ OVHD	9.8	→							
DIFFERENCE	41.5	36.4							
FUEL ETE	8+50	7+45							
ETE DESTINATION	8+00	7+03							
EXTRA TIME	0+50	0+42							

VI. FIX/COMPUTER POSITION

TIME	GPS/SCNS	INS -1	DVS / INS -2
1335	N 33 28.0 W 077 35.9	N 33 28.1 W 077 36.0	N 33 29.1 W077 37.4
1405	N 34 02.8 W 074 35.9	155 / 0.4 nm	230 / 1.1 nm

VIII. RADAR/NAVAID DATA

TIME	STATION	READING	CORR	CORR READING
1335	CHS	090/127	-5W	085/127
1335	ILM	173/58	-7W	166/58
2052	FRS	207/38	-12W	195/38

IX. IN-FLIGHT DATA

CLEARANCE/REMARKS: RWY 03 RDR VECT ON CRS; CLIMB 17.0 DEPT FREQ: 231.5 SQ: 3128

1500 - CLIMB 19.0; 1510 Nav SYS Fail - loss of GPS/INS; 1700 - CLIMB 21.0; 1900 - CLIMB 23.0;

GMT	POS	NAV DATA	TC / GC	W/V	DC	TH / GH	VAR	MH	DEV CORR	CH	TAS	AD/GD	TIME	GS	NEXT	WP	DIST	TIME	ETA	TEMP	ALT	NAV DATA/REMARKS TIME	HDG	DA/GS	W/V	#
1300	T/O					RWY 03 RDR VCTR DCT WPT 1														°		1345	086	-1/309	259/39	270
																				M		1355	088	-1/308	258/37	270
1335	△	N 33 28.0		257	38	076					270			308	2		29	+06	1341	-14°		1405	087	-1/308	258/38	270
		W 077 35.9													3		152	+30	1411	17.0M		1411	091	0/308	258/38	270
1435	G-I	N 34 31.9		263	41	079					270			309	4		27	+05	1440	-14°		1425	091	0/309	262/42	270
	▢	W 071 33.8													5		155	+30	1510	17.0M		1435	091	0/309	260/40	270
1505	G-I	N 35 02.3		261	40	078					270			309	5		26	+05	1510	-18°		1445	087	+1/309	260/40	270
	▢	W 068 29.1													6		155	+30	1540	19.0M		1455	087	+1/309	261/39	270
1535	○		086			087	+16W	103	+1	104	270	154		309						°		1505	104	+1/309	262/41	270
				+1L								+30								M		1515	103	+1/309	260/40	270
1535	DOP	N 35 56.2		262	40	087					270			309	6		26	+05	1535	-18°		1525	105	+1/309	260/40	270
	▢	W 065 28.5													7		252	+48	1623	19.0M		1535	104	+1/309	260/40	270
1535	A/H		089	260	40	091	+16W	107	+1	108	270			309						°						
				+2L																M						
																				°						
																				M						
																				°						
																				M						
																				°						
																				M						
																				°						
																				M						
																				°						
																				M						
																				°						
																				M						
																				°						
																				M						
																				°						
																				M						
2055						INTERCEPT H-131 AIRWAY - LOG CLOSED														°						
																				M		LAND			2135	
2135	LAND	LPLA				Joseph Bag O'Donuts, 1 Lt, USAF														°		T/O			1300	
																				M		TOTAL FLT TIME			8+35	

Figure 11.3. ARA Pattern Construction Procedures.

ARA CONSTRUCTION PROCEDURES

BRIEFING ITEMS
- Approach
- Minimums
- Missed Approach
- Landing Runway
- Timing
- Terrain

Fld Elevation	240
+ 500 ft	+ 500
MDA	= 740

ABSOLUTE ALTITUDE AT DISTANCE OUT

DESC<	THLD	1nm	2nm	3nm	4nm	5nm	6nm	7nm	8nm	9nm	10nm
2.0	A	212	424	636	848	1060	1272	1484	1696	1908	2120
2.5	A	265	530	795	1060	1325	1590	1855	2120	2385	2650
2.83	A	300	600	900	1200	1500	1800	2100	2400	2700	3000
3.0	A	318	636	954	1272	1590	1908	2226	2544	2862	3180
3.5	A	371	742	1113	1484	1855	2226	2597	2968	3339	3710

Add "A" to alt above to build glideslope. Brief and fly ARA

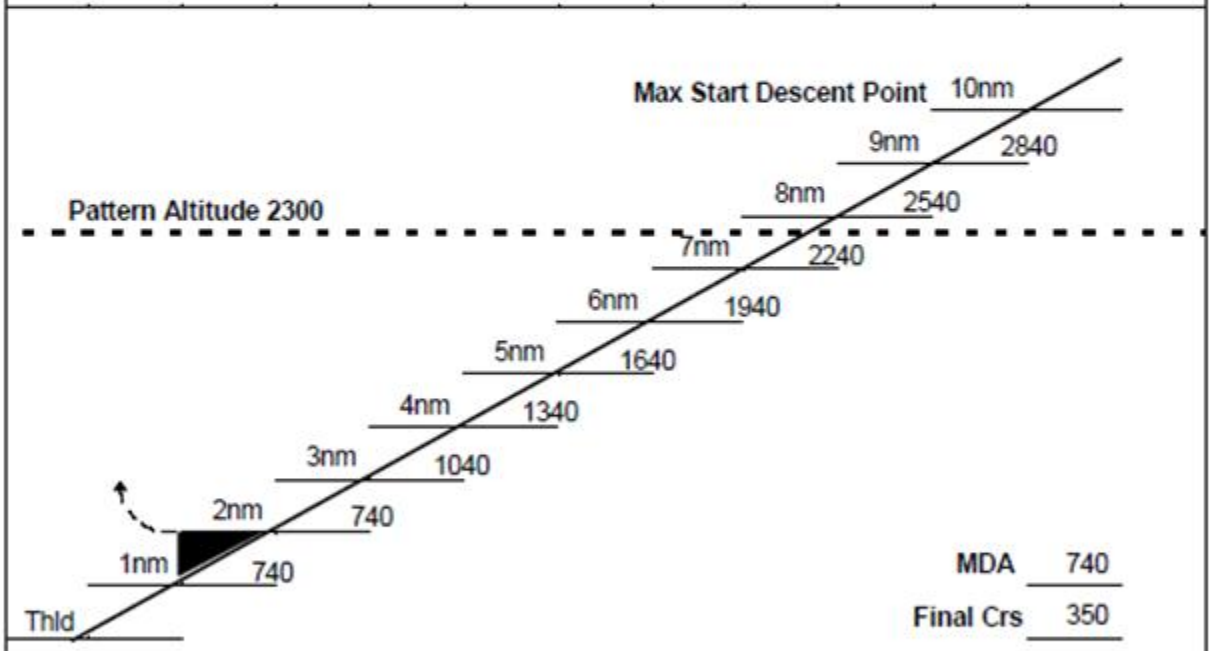

RATE OF DESCENT IN FT/MIN

DESC<	FT/MIN	105K	110K	115K	120K	125K	130K	135K	140K	145K	150K
2.0	212	371	388	406	424	441	459	477	494	512	530
2.5	265	464	486	508	530	552	574	596	618	640	662
2.83	300	525	550	575	600	625	650	675	700	725	750
3.0	318	557	583	610	636	663	689	716	742	769	795
3.5	372	651	682	713	744	775	806	837	868	899	930

Figure 11.4. AF IMT 4125, Range Control Chart.

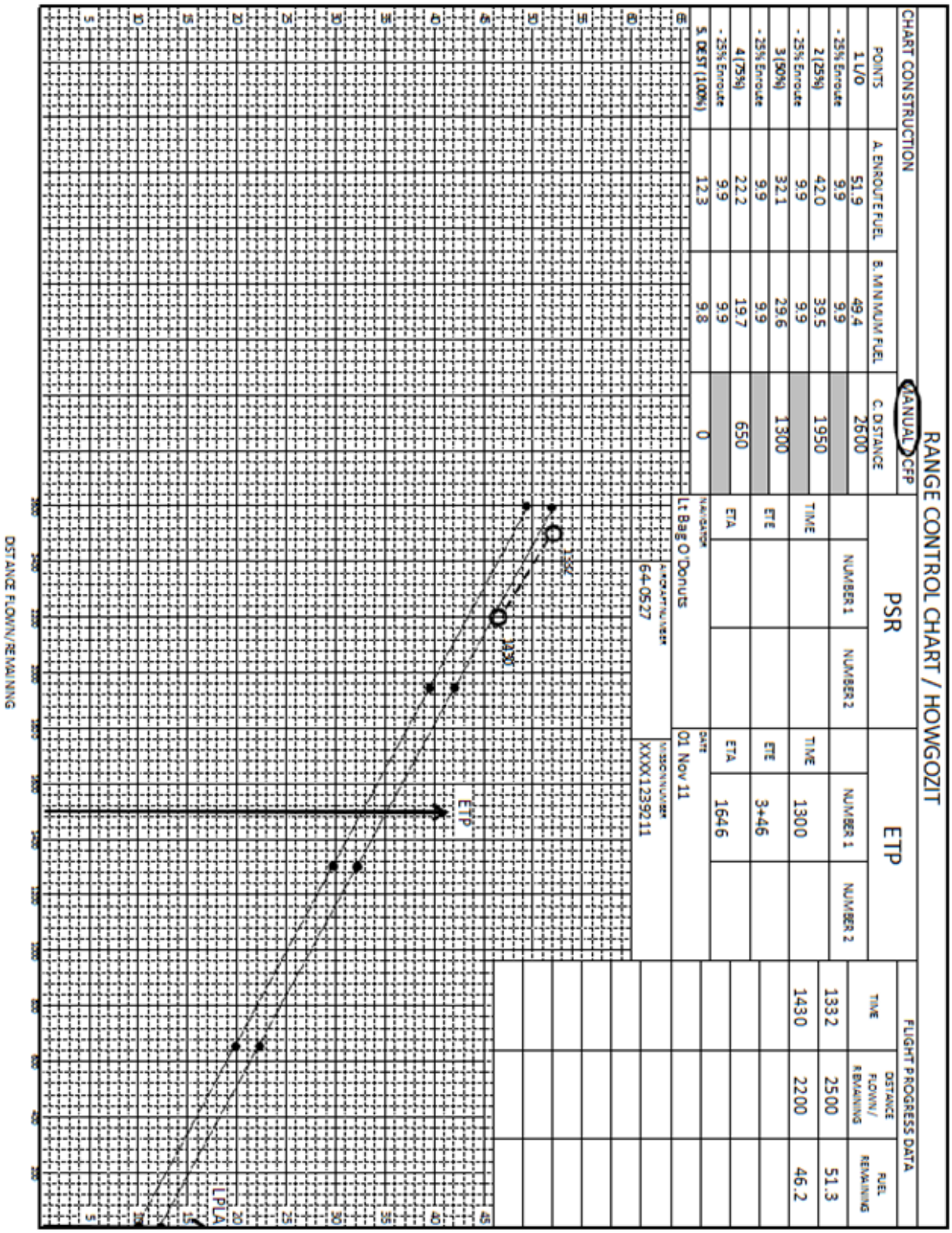

Chapter 12

FLIGHT ENGINEER / AIRCREW MAINTENANCE SUPPORT PROCEDURES

12.1. General: This chapter contains flight engineer procedures not contained in the flight manual, other portions of this AFI, or other publications.

12.2. Responsibilities. The flight engineer is responsible to the pilot in command for all inspections and procedures required by the applicable technical orders and regulations.

12.3. Authority to Clear a Red X. If a situation is encountered where the aircraft is on a Red X and qualified maintenance personnel are not available to clear it, the highest qualified flight engineer on scene may obtain authorization to sign off the Red X from the home station MXG/CC or designated representative, in accordance with T.O. 00-20-1. Other crew members are not authorized to clear a Red X. ***EXCEPTION:*** The flight engineer may clear Red Xs for engine panels and covers, pitot covers, gear pins and SPR drains when qualified maintenance personnel are not available, unless prohibited by the home station MXG/CC or OG/CC.

12.4. Aircraft Servicing and Ground Operations. The flight engineer is qualified and authorized to accomplish these duties when maintenance personnel are not available. This policy is designed for support of the aircraft and its mission while away from home station. The applicable refueling and de-fueling checklists will be used during all refueling and de-fueling operations. If ground support personnel are not available, the aircraft commander will designate other crewmembers to assist the flight engineer. A flight engineer may assist the normal maintenance function when critical taskings dictate their use, provided this action does not impact crew duty and crew rest limits specified in Chapter 3 of this AFI. **WARNING:** Do not load/off-load cargo containing explosives, oxygen, flammable gases or liquids during any fuel servicing operations.

12.4.1. Fuel Servicing Operations. Unless servicing JP-4, simultaneous servicing of fuel while loading passengers, cargo, performing maintenance, aircrew members performing inspections, or operating aircraft systems is considered to be a normal fuel servicing operation. If refueling/defueling with JP-4, Concurrent Servicing operations are required IAW TO 00-25-172. Aircrew members qualified in ground refueling may perform fuel servicing duties. Aircrews will only refuel in cases when maintenance support is not readily available and the mission would be delayed.

12.4.1.1. When crewmembers are required to refuel, the flight engineer will act as the refueling team supervisor. Flight engineers will comply with T.O. 00-25-172 and applicable TO 1C-130xx series. Two other crew members are required to assist in the refueling, one for safety duties and the other to act as fire guard.

12.4.1.2. Designate a current and qualified maintenance personnel or aircrew member to remain on the flight deck to monitor interphone and be prepared to broadcast a request for emergency assistance on a radio tuned to the appropriate agency with ready access to an emergency response team anytime aircrew members are in the aircraft and fuel servicing is being conducted. The PA may be used to direct passenger evacuation in an emergency.

12.4.1.3. With passengers on board, a current and qualified aircrew member will be designated the passenger compartment monitor (PCM) and shall continuously monitor passengers during fuel servicing operations. PCMs will not perform other duties during fuel servicing.

12.4.1.4. The PCM shall brief passengers on emergency egress, exits, prohibitions, and hazards. Passengers will remain seated except for brief physiological needs, but will not wear seat belts. When possible, conduct this briefing prior to fuel servicing. If fuel servicing is in progress, the briefing will be given immediately after boarding.

12.4.1.5. When authorized, passengers may board or exit the aircraft for the express purpose of loading for departure or off-loading upon arrival. Boarding or exiting must be opposite of fuel servicing operations. Once onboard, except for emergencies, passengers shall not deplane once fuel servicing commences.

12.4.1.6. Passengers are not required to ground themselves.

12.4.1.7. The PIC, or designated maintenance/aircrew representative will advise PCMs when to evacuate passengers.

12.4.1.8. The PCM shall set the interior lighting as bright as possible to suit the combat environment.

12.4.1.9. The loadmaster shall ensure cargo loading or unloading does not jeopardize passenger safety. Winching is prohibited with passengers on board.

12.4.1.10. Simultaneous fuel and oxygen servicing is not authorized.

12.4.1.11. Winching of rolling stock and non-spark producing (i.e. wooden) pallets is authorized. Driving vehicles equipped with spark arresters is authorized during fuel servicing. When loading vehicles without spark arresters, the vehicles must be either completely inside the cargo compartment, or outside of the established fuel servicing safety zone, before fuel servicing lines can be pressurized. ***EXCEPTION:*** Diesel and turbo-charged (without waste gates) gasoline-powered vehicles can be on-loaded or off-loaded without having to stop fuel flow.

12.4.1.12. The following guidance will be used for fuel servicing operations:

12.4.1.12.1. Electronic equipment may be on and operated to include operations performed by aircrew members during required inspections with the following exceptions:

12.4.1.12.1.1. Radar Altimeters and TACANs must be turned off.

12.4.1.12.1.2. Radar may be in standby but, if time permits, should be turned off.

12.4.1.12.1.3. IFF/SIF may be in standby but, if time permits, should be turned off.

12.4.1.12.1.4. SCNS/INU may be “on” and may be updated. Do not turn on or off during refuel operations.

12.4.1.12.1.5. Radio operations are authorized. **EXCEPTION**: Use of HF radios is prohibited.

12.4.2. Hot Refueling. Hot refueling (refueling with aircraft engines running) will only be conducted by crews that have been authorized and certified according to AFI 11-235, *Forward Area Refueling Point (FARP) Operations*.

12.5. Aircraft Recovery Away from Main Operating Base (MOB). The PIC is responsible for ensuring the aircraft is turned to meet subsequent mission taskings. If qualified maintenance specialists are unavailable, the aircrew is responsible for turning the aircraft to meet subsequent mission taskings.

12.5.1. The PIC is responsible for the recovery items including:

12.5.1.1. Parking and receiving.

12.5.1.2. Aircraft servicing, including AGE usage.

12.5.1.3. Supervision of minor maintenance within local capability.

12.5.1.4. Minor configuration changes to meet mission tasking.

12.5.1.5. Securing the aircraft before entering crew rest.

12.5.1.6. Coordinating aircraft security requirements.

12.5.1.7. Documenting AFTO 781-series forms.

12.5.2. In all cases where aircrews must service the aircraft without qualified maintenance specialist assistance, comply with the appropriate maintenance T.O.

12.5.3. Aircrews are not qualified to accomplish the required ground inspections. In those instances where maintenance personnel are not available, the aircrew will enter a red dash symbol in the AFTO Form 781H, *Aerospace Vehicle Flight Status and Maintenance Document*, updating current status and enter a red dash symbol and a discrepancy that reflects that the applicable maintenance inspection (i.e. preflight, thru-flight, basic post-flight) is overdue.

12.6. Aircraft Structural Integrity Program. Complete aircraft data, IAW TO 1C-130-101, *Implementation of C-130 Series Aircraft Usage Report* on all flights.

12.7. Aircraft Systems/Forms Management.

12.7.1. The flight engineer will monitor aircraft systems during all flight and ground operations. Notify the pilot of all abnormal indications and take action as required.

12.7.2. In addition to the procedures in TO 00-20-1 and AFI 11-401, the flight engineer will assist the pilot in maintaining the AFTO Form 781.

12.8. Performance Data, including TOLD Card. TOLD computations will be placed on AF IMT 4063 and AF IMT 4064.

12.8.1. All performance calculations will be based on 95 percent engines. TOLD card computations will be accomplished using flight manual performance data or approved tabulated data.

12.8.2. When conducting flaps up landing , compute and post VMCA speeds for both configurations; flaps 50% and flaps up (normal boost). For example: VMCA, in ground effect, one engine inoperative – 105/122.

12.8.3. Minimum TOLD requirements for a termination landing are: Air Minimum Control Speeds, Obstacle Clearance Speed, 3 Engine Climb Speed, 100 & 50% Flap Landing Speeds and Distances, 0% Flap Landing Approach Speed (Night or IMC), and 3 Eng Ft/NM.

12.9. Fuel Management/Monitoring. The flight engineer will be responsible for management of fuel in accordance with the applicable flight manual and mission requirements in addition to monitoring fuel usage and destination fuel requirements in conjunction with the pilots, however, the Aircraft Commander retains overall responsibility for ensuring adequate fuel reserves for mission accomplishment.

12.9.1. AF IMT 4108, *C-130 Fuel Log*. The purpose of the form is to provide an orderly method of recording fuel consumption and aircraft gross weight. The following instructions standardize procedures for the completion and disposition of AF IMT 4108:

12.9.2. The AF IMT 4108 will be completed whenever the navigator completes AF Form 4116. The log maybe filled out as necessary to accomplish training or corrective action.

12.9.2.1. When the fuel log is completed, it is not required to fill out the reverse side of the AF IMT 4063.

12.9.3. Responsibility:

12.9.3.1. The flight engineer will complete the AF IMT 4108.

12.9.3.2. Return completed forms to the unit of the individual completing the form. The squadron flight engineer supervisor will maintain completed forms for 6 months.

12.9.4. Additional Information. AF IMT 4108 provides as a simple method of recording aircraft fuel data and is adequate for normal operational requirements. When additional information is required for identifying trends in engine failure or performance or for special test programs, the directing headquarters will furnish necessary forms and instructions to complete the program.

12.9.5. Instructions. Form heading entries are self-explanatory.

12.9.5.1. Block 1-FUEL GAGE POUNDS. Record fuel quantity from the fuel quantity indicators before and after flight. This reading is normally taken prior to engine start with the indicators powered and after flight prior to power being removed from the indicators.

12.9.5.2. Block 2-WEIGHT DATA. Record operating weight and cargo weight (including passenger weight) from DD Form 365-4 *Weight and Balance Clearance Form F—Tactical/Transport*. Ramp fuel weight is obtained from block 1 (Fuel Gage). The blank space may be used for last minute changes prior to engine start or as required.

12.9.5.3. Block 3-FUEL ON/OFFLOAD. Enter total weight of fuel on or offload during air refueling in this block.

12.9.5.4. Block 4-PAX/CARGO OFFLOAD. Enter total weight of passengers and cargo extracted during flight in this block.

12.9.5.5. Block 5-ENGINE START Z. Enter GMT of last engine started.

12.9.5.6. Block 6-COND. Enter symbol depicting flight condition as follows:

12.9.5.6.1. WU/TAXI/TAKEOFF-Indicates warm-up taxi and takeoff conditions.

12.9.5.6.2. 1k Climb. Initial climb is indicated by symbol (1k). Secondary and subsequent climbs are shown as (2 k, 3k, etc.). The number here indicates sequence of condition in flight profile. This is also true of cruise segments and descents. Climbs of 4,000 feet or less will not be recorded separately but will be included in preceding cruise increments. When constant climb is maintained to cruise altitude, use fuel flow reading taken at 2/3 climb altitude. When constant climb cannot be maintained to cruise altitude due to ATC clearances, etc., enter difference between sum of individual fuel quantity gage readings at beginning and end of climb.

12.9.5.6.3. Cruise operating conditions are indicated by the number in cruise sequence and an arrow (1g, 2g, 3g, etc.). Instrument readings will be averaged for this period. Normally, cruise entries will be no more than 1 hour. However, the first cruise, the cruise immediately prior to enroute or step climb and/or the last cruise prior to descent, may be no less than 30 minutes, nor more than 1 hour and 30 minutes.

12.9.5.6.4. Descents are shown as (1m, 2m, 3m, etc.). Do not confuse descent with the final letdown that occurs when your landing procedures begin. The loss in altitude during final letdown is indicated by "L & T." Landing and taxi is that condition from the end of the last entry in the sequence of descents to engine shutdown on the ramp. Holding time, however, must be accounted for as an additional cruise (g) condition after descent when necessary. Descents of 4,000 feet or less will not be recorded separately but will be indicated in the preceding cruise increment. When descent exceeds 4,000 feet, blocks 10 through 18 need not be completed.

12.9.5.6.5. Air-Air Refueling Tanker Operation, Air-Air Refueling Receiver Operation. Cruise, climb, or descent to refueling altitude (end this condition approximately at start of on/ offload of fuel.) Indicate AR and ARR 1, 2, etc., in condition block, for refueling condition. Blocks 10 through 18 need not be completed. Blocks 19, 20, 22, 25, and 28 entries are not required for ARR. At completion of on or offload of fuel, a new cruise, climb, or descent condition will be initiated. NOTE: Rescue. search, storm penetration, combat/combat support, or any special mission which requires constant variations in altitude and airspeed may use the same procedures as air refueling operations. For this type of condition use an "S" in the condition block.

12.9.5.7. Block 7-END. Enter GMT for end of condition.

12.9.5.8. Block 8-SET. Enter increment time duration for the condition for WU/TAX/TO. All warm-up and taxi times will be entered in the circle of the SET block. Takeoff time is computed from brake release to the first change of power (when reduced power procedures are used, compute take-off time using 2 minutes).

12.9.5.9. Block 9-TOTAL. Enter cumulative total time of SET time, excluding the warm-up and taxi times entered in the circle SET time.

12.9.5.10. Block 10-OATI. Enter indicated outside air temperature reading.

12.9.5.11. Block 11-OAT/VAR:

12.9.5.11.1. OATC. Enter corrected outside air temperature as determined from the appropriate performance manual.

12.9.5.11.2. VAR. Enter temperature variation from standard International Civil Aviation (ICAO) temperature.

12.9.5.12. Block 12-HP. Enter the pressure altitude for the condition with altimeter set at 29.92 Hg.

12.9.5.12.1. For climb, enter HP for 2/3 the intended climb as soon as the altitude to which the climb is to be made is known. The entry (2/3 HP) reflects pressure altitude for 2/3 of the actual climb. If a climb starts at 15.000 feet and terminates at 30,000 feet, you compute the pressure altitude for 2/3 of the 15,000 difference, which is 10,000 feet. This HP added to the 15,000 foot beginning HP equals 25,000 feet HP, which is the appropriate entry for this climb.

12.9.5.12.2. For cruise, enter the actual HP.

12.9.5.12.3. When descent exceeds 4,000 feet, blocks 10 through 18 need not be completed.

12.9.5.13. Block 13-CRUISE CEILING. Enter 4-engine cruise ceiling for the aircraft from the appropriate performance manual.

12.9.5.14. Block 14-CRUISE IAS. Enter indicated airspeed from the appropriate performance manual required to maintain desired true airspeed.

12.9.5.15. Block 15-TORQUE. Enter torque value from the appropriate performance manual required to maintain the desired true airspeed.

12.9.5.16. Block 16-3-ENGINE SERVICE CEILING. Enter 3-engine service ceiling from the appropriate performance manual.

12.9.5.17. Block 17-3-ENGINE DRIFTDOWN IAS. Enter the 3-engine driftdown indicated airspeed from the appropriate performance manual.

12.9.5.18. Block l8-ENGINE INST F/F LBS/HR. Enter the average individual fuel flow reading and total for the period. Engine instrument fuel flow (lbs/hr) will be the complete figure (4800 not 4.8).

12.9.5.19. Block 19-PERIOD (FUEL USED). Enter fuel used for engines for the period as computed using total of fuel flow readings. NOTE: For fuel used during WU/TAXI, use 50 pounds per minute. For fuel used during TAKEOFF, use 300 pounds. Enter all fuel used, fuel remaining, and gross weights in thousands. EXAMPLE: 127,300 = 127.3. All weights are to be carried to the nearest hundred. EXCEPTION: Engine instrument fuel flow (lbs/hr) will be a complete figure.

12.9.5.20. Block 20-EXTRA (FUEL USED). Enter extra fuel used during flight condition period for fuel jettisoning, APU, etc. Fuel transferred to a receiver during air refueling will be entered in this block.

12.9.5.21. Block 21-TOTAL (FUEL USED). Enter cumulative total of fuel used for successive conditions. This block represents all fuel consumed to END clock time

entered in block 7. ARR (receiver) start new condition (cruise, climb, or descent) after refueling with "O" (zero) fuel used.

12.9.5.22. Block 22-PERIOD (CALC FUEL REMAINING). Enter the amount of fuel consumed (block 19 plus block 20) for flight condition as determined by calculation.

12.9.5.23. Block 23-TOTAL (CALC REMAINING). Enter the total amount of the calculated fuel remaining by subtracting the amount in block 22 from the amount of calculated fuel remaining at END clock time entered in block 7. ARR (receiver) condition. Enter cumulative total of fuel (indicated by individual gage readings) on board airplane after refueling.

12.9.5.24. Block 24-This block is unlabeled to facilitate entering the total ramp fuel from block 2, WEIGHT DATA. Enter the ramp calculated fuel aboard, obtained by either measurement with a dipstick and applying any known correction factor or as indicated by total of fuel quantity indicators. On reverse side of form, this block is used to carry forward previous quantity from front side of form.

12.9.5.25. Block 25-GAGE PERIOD (GAGE FUEL REMAINING). Enter the period fuel used for flight condition as determined by the fuel gage readings for present condition compared to the fuel gage reading for previous condition. For fuel used during WU/TAXI, use 50 pounds per minute. For fuel used during TAKEOFF, use 300lbs.

12.9.5.26. Block 26-TOTAL (GAGE TOTAL). Enter total of fuel as indicated by the individual quantity gages. ARR (receiver) condition. Enter cumulative total of fuel (individual gage readings) onboard airplane after refueling.

12.9.5.27. Block 27-This block is unlabeled to facilitate entering total ramp fuel from Block 2. WEIGHT DATA. Enter the ramp calculated fuel aboard obtained by either measurement with the dipstick and applying any known correction factor or as indicated by the total of fuel quantity indicators. On reverse side of the form this block is used to carry forward previous quantity from the front side of the form.

12.9.5.28. Block 28-FUEL USED. Enter the fuel used from total of blocks 19 and 20.

12.9.5.29. Block 29-ON/OFFLOAD. After the aerial delivery of troops or equipment or after aerial refueling, enter the weight loss or gain to properly indicate actual gross weight of airplane in block 30.

12.9.5.30. Block 30-END GROSS WEIGHT. Enter the aircraft gross weight at end of period. This weight is found by subtracting fuel used for this period (Block 21) from previous ending gross weight. If entry was made in block 29 (ON/OFFLOAD), this weight must also be added or subtracted from the previous ending gross weight to arrive at correct END GROSS WEIGHT figure.

12.9.5.31. Block 31-. This block is unlabeled to facilitate entering total ramp gross weight from Block 2. WEIGHT DATA. On reverse side of form, this block is used to carry forward previous weight from the front side of form.

12.9.5.32. Block 32-REMARKS. Enter any remarks or observations, including instrument readings pertinent to flight, which you feel noteworthy.

12.10. HOSTILE ENVIRONMENT REPAIR PROCEDURES.

12.10.1. **General.** This instruction establishes operational procedures for C-130 Hostile Environment Repair Procedures (HERP). Authority to use HERP is granted by OG/CC/CD for Operations when the aircraft is directed into a hostile or potentially hostile environment or in extreme cases where recovery of the aircraft or completion of the mission dictates their use. This authority is documented on the FRAG or Air Tasking Order. The OG/CC/CD for Operations may delegate this authority as necessary in cases where: (1) The unit is geographically separated from the parent unit, or (2) the unit is deployed or otherwise not co-located with the OG/CC/CD for Operations. All normal avenues of repair/recovery should be exhausted (when practical) prior to use of the HERP. Procedures identified with an asterisk (*) are not considered a HERP and may be accomplished at the discretion of the Aircraft Commander. When HERP are actually employed, inform MAJCOM Stan/Eval by letter. Include a brief description of the circumstances and conditions leading to the decision to approve HERP.

12.10.2. **Hostile Environment Repair Kit (HERK).** A complete repair kit is prescribed in **Table 12.1**. Units will identify repair kit inventory and issue procedures in the unit supplement this AFI.

12.10.2. **(911AW)** Hostile Environment Repair Kits (HERK) will be maintained by the flight engineer section. Each HERK will be inventoried quarterly in accordance with Table 12.1, and date of inspection recorded on the 758th AS HERK inventory log. When required for a mission, flight engineers will use this log to document sign out/in. If the HERK is used or the seal is broken, the kit will be re-inventoried by the crewmember, sealed, and returned to the flight engineer section.

12.10.3. **Designated Hostile Environment Repair Procedures:**

12.10.3.1. **Battery Dead or Damaged. WARNING:** If the aircraft battery is damaged, disconnect and remove it from the aircraft. Use caution to avoid acid burns if the battery is leaking. When swapping batteries, the battery connector should be installed as rapidly as possible to preclude excess arcing. **CAUTION:** When flying with a dead or otherwise disabled battery, ensure the DC Power Switch remains in the "BATTERY" position. **CAUTION:** When installing or removing battery connectors and recommended jumper wires electrical arching is possible. **NOTE:** If aircraft is equipped with an Emergency INS Battery Bus Tie Switch (TCTO 1C-130-1723) and has a serviceable INS/SCNS battery proceed to **Step 12.10.2.2** **NOTE:** If another aircraft is available, temporarily place its operable battery (or INS battery when available) in the disabled aircraft until at least one engine is operating.

12.10.3.1.1. **Jumping Battery – Aircraft to Aircraft. WARNING:** Fire protection is not available for the GTC/APU, until the Battery Relay is jumped. **CAUTION:** Reduce DC load on disabled aircraft as much as possible to preclude the possibility of over loading the DC cargo winch current limiter.

12.10.3.1.1.1. Position aircraft nose to nose to allow the DC power cable (or cables) to reach.

12.10.3.1.1.2. Join both aircraft DC power cables by use of the extender plug or brass bars listed in **Table 12.1**.

12.10.3.1.1.3. Place cable from operating aircraft DC winch receptacle to

external DC power receptacle of disabled aircraft.

12.10.3.1.1.4. DC power switch on disabled aircraft to "External DC" position.

12.10.3.1.1.5. Start APU/GTC on disabled aircraft.

12.10.3.1.1.6. ATM Generator/APU Generator Switch – ON.

12.10.3.1.1.7. Remove cable from the DC winch receptacle to the external DC power receptacle of the disabled aircraft

12.10.3.1.1.8. Accomplish failed battery relay procedure. (See **paragraph 12.10.3.5**)

12.10.3.1.1.9. When battery relay is closed and APU generator is powering TR units on the aircraft supplying DC power to the ESS and Main DC buses, remove jumper cables and continue with STARTING ENGINES CHECKLIST. **NOTE:** It is recommended to start at least one engine and have its generator on line before disconnecting power cables.

12.10.3.1.2. **DC Power Without Usable Aircraft Battery Or Spare Aircraft**

12.10.3.1.2.1. Obtain two 12 volt or one 24 volt battery and jumper cables, or suitable heavy duty cable, modified as required. (DC cargo winch cable may be used.)

12.10.3.1.2.2. Use option one to connect the external batteries to the battery connector, or option two to connect the external batteries to the external DC power receptacle. (See **Figure 12.1**) **CAUTION:** When jumping batteries to aircraft battery wiring ensure proper polarity is used otherwise damage to equipment or personnel can occur.

12.10.3.1.2.3. **Option one (See Figure 12 1.)** Insert stock into battery connector run cables to either one 24 volt battery or two 12 volt batteries connected in series. Place DC Power Switch to "Battery". **NOTE:** With DC power switch placed in the EXT DC position (option two) check the EXT DC PWR light ON. If the light is not illuminated, check all connections and battery polarity.

12.10.3.1.2.4. **Option two (See Figure 12 1.)** Attach cables from either one 24 volt battery or two 12 volt batteries connected in series to the external DC power receptacle. Place the DC Power Switch to "EXT DC". **WARNING:** There will be no aircraft fire protection available if Option 2 is used."

12.10.3.1.2.5. Start GTC/APU. **WARNING**: If option two is utilized, fire protection is not available for the GTC/APU, until the Battery Relay is jumped.

12.10.3.1.2.5.1. Control Switch – Start, Run.

12.10.3.1.2.5.2. Bus Tie Switch – Tied.

12.10.3.1.2.6. ATM and ATM generator/APU generator-ON, checked.

12.10.3.1.2.7. If option two was utilized, jump battery relay using failed battery relay procedure. (See **paragraph 12.10.3.5**)

12.10.3.1.2.8. Start an engine and place the generator switch to ON.

12.10.3.1.2.9. Disconnect jumper cables.

12.10.3.2. **Starting Aircraft with Emergency INS Battery Bus Tie Switch. (Airplanes modified by TCTO 1C-130-1723). WARNING:** If the aircraft battery is damaged, disconnect and remove it from the aircraft. Use caution to avoid acid burns if the battery is leaking.

12.10.3.2.1. Complete applicable items on the Cockpit and Before Starting Engines checklist. **CAUTION:** Reduce DC load as much as possible to preclude the possibility of overloading the INS battery.

12.10.3.2.2. Open pilot's lower, forward circuit breaker panel.

12.10.3.2.3. Install a #4 jumper wire on the A-1 and A-2 terminals of the battery relay. (see **Figure 12.2**)

12.10.3.2.4. Close pilot's lower, forward circuit breaker panel.

12.10.3.2.5. Engage Emergency INS Battery Bus Tie Switch above pilot's upper circuit breaker panel.

12.10.3.2.6. DC Voltmeter Switch – Essential DC Bus then Battery Bus, check voltage. **NOTE:** If Essential DC Bus is not powered, proceed to **paragraph 12.10.3.3**. Bypassing the INS Reverse Current Relay (RCR) (Airplanes not modified by TCTO 1C-130-1723). **NOTE:** The Battery, Isolated, Essential, and Main DC Buses will be powered by the INS Battery. Minimize loading on all DC buses.

12.10.3.2.7. DC Power Switch – Battery

12.10.3.2.8. Start GTC/APU

12.10.3.2.8.1. ATM and ATM Generator/APU Generator – ON, check voltage and frequency

12.10.3.2.9. Start any engine in Normal Ground Idle

12.10.3.2.9.1. Engine GEN switch – ON, check voltage and frequency.

12.10.3.2.10. Review Cockpit and Before Starting Engines checklists.

12.10.3.2.11. Start the remaining engines using the Starting Engines checklist.

12.10.3.2.12. Closely monitor INS battery and aircraft battery bus voltage during flight. **WARNING:** The Battery Bus might not be powered if the Isolated DC or Essential DC Buses are isolated using the flight manual bus isolation procedures. Fire protection and radio communications might not be available. **NOTE:** The Essential DC Bus can be isolated using the flight manual bus isolation procedures but the Emergency INS Battery Bus Tie Switch above the pilot's upper circuit breaker panel must also be disengaged.

12.10.3.3. **Bypassing the INS Reverse Current Relay (RCR) (Airplanes not modified by TCTO 1C-130-1723). WARNING:** When performing maintenance inside any circuit breaker panel all aircraft power must be removed to prevent injury to personnel or equipment. **WARNING:** If the aircraft battery is damaged, disconnect and remove it from the aircraft. Use caution to avoid acid burns if the battery is leaking.

12.10.3.3.1. Before jumping terminals APP to BATT on the INS RCR you must first disconnect the INS Battery or arcing may occur.

12.10.3.3.2. Open the pilot's upper circuit breaker panel.

12.10.3.3.3. Jump the INS RCR by installing a #10 jumper wire from the APP terminal to the BATT terminal of the reverse current relay. (See **Figure 12.11**)

12.10.3.3.4. Reconnect the INS Battery connector

12.10.3.3.5. Check the DC voltmeter in the ESS DC BUS position to verify the bus is powered.

12.10.3.3.5.1. If the ESS DC BUS is not powered, bypass the relay as follows:

12.10.3.3.5.1.1. Remove all power from the aircraft.

12.10.3.3.5.1.2. Disconnect the INS battery.

12.10.3.3.5.1.3. Bypass the INS RCR by installing a #4 jumper wire from the GEN terminal to the BAT terminal of the reverse current relay. (See **Figure 12.11)**

12.10.3.3.5.1.4. Connect the INS battery.

12.10.3.3.6. Start GTC/APU. **WARNING:** Fire protection is not available for the GTC/APU, until the Battery Relay is jumped.

12.10.3.3.6.1. Place Bleed Air Valve switch to OPEN (airplanes with ATM).

12.10.3.3.7. Place ATM and generator/APU generator switch to ON. Check Voltage and Frequency.

12.10.3.3.8. Remove #10 jumper wire from the INS RCR.

12.10.3.3.9. Jump the battery relay using Failed Battery Relay procedure. (See **paragraph 12.10.3.5**) **WARNING:** If the INS RCR has been bypassed by installing the #4 jumper wire, neither the ISOLATED DC bus nor the ESSENTIAL DC bus can be isolated using bus isolation procedures in the flight manual.

12.10.3.4. **Failed RCR between Isolated and Essential DC Bus. WARNING:** When performing maintenance inside any circuit breaker panel all aircraft power must be removed to prevent injury to personnel or equipment.

12.10.3.4.1. Remove External Power and disconnect both the Aircraft and INS/SCNS batteries.

12.10.3.4.2. Open pilot's side circuit breaker panel.

12.10.3.4.3. Install a #10 jumper wire between the SW post and the APP post (see **Figure 12.2**).

12.10.3.4.4. If the RCR fails to energize, bypass the relay as follows:

12.10.3.4.4.1. Remove all power from the aircraft.

12.10.3.4.4.2. Disconnect the aircraft battery.

12.10.3.4.4.3. Install a #4 jumper wire between the BATT and GEN terminals

(see **Figure 12.2**).

12.10.3.4.4.4. Connect the aircraft battery. **WARNING:** The Essential DC bus cannot be isolated using bus isolation procedures contained in the flight manual. **NOTE:** When the #4 jumper wire is used on the RCR, the Iso DC on Batt/Batt Disc light will remain ON, even though the Essential DC bus is powering the Isolated Bus.

12.10.3.5. **Failed Battery Relay**

12.10.3.5.1. DC power Switch – BATTERY.

12.10.3.5.2. Jump battery relay by momentarily touching terminals “A-1” to “A-2” using the #10 jumper wire. (See **Figure 12.2**)

12.10.3.5.3. Check the battery voltage on voltmeter to verify closing of relay. (The voltmeter should read bus voltage.)

12.10.3.5.4. If battery relay fails to close, (as indicated by no bus voltage on DC volt meter) bypass the relay as follows:

12.10.3.5.4.1. Remove all power from the aircraft.

12.10.3.5.4.2. Disconnect the aircraft battery.

12.10.3.5.4.3. Install a #4 jumper wire between the A-1 and A-2 terminals. (See **Figure 12.2**) **WARNING:** The ISOLATED DC bus cannot be isolated using bus isolation procedures. **NOTE:** When the #4 jumper wire is used on the RCR, the ISOL DC ON BATT/BATT DISC light will remain ON, even though the Essential DC bus is powering the Isolated Bus.

12.10.3.5.4.4. Connect the aircraft battery and INS battery. **WARNING**: Fire protection is not available for the GTC/APU until the aircraft battery bus is powered. If an engine fire or nacelle overheat is indicated and battery relay has opened, install a #4 jumper wire from terminals "A-1" and "A-2" to power the battery bus. **CAUTION:** When flying with a dead or otherwise disabled battery, ensure the DC Power Switch remains in the "BATTERY" position.

12.10.3.6. **BSU #1 Failure Bypass Procedure (Used To Correct an Essential AC Avionics Bus Failure Resulting from a BSU #1 Failure)**

12.10.3.6.1. Remove External Power.

12.10.3.6.2. Pull the BSU #1 Power, three phase, ESS AC Bus circuit breaker located on the pilot’s side circuit breaker panel.

12.10.3.6.3. Pull the BSU #1 Power, three phase, Main AC Bus circuit breaker on the copilot’s upper circuit breaker panel.

12.10.3.6.4. Pull the BSU #1 ESS DC control power circuit breaker located on the copilot’s lower circuit breaker panel. **CAUTION:** When performing jumpering of BSU connectors J1 to J4 ensure proper phase connections are made (i.e., Phase A connected to Phase A). Crossing phases can cause damage to equipment

12.10.3.6.5. Remove J1 and J4 cannon plugs from the #1 BSU (See **Figure 12.13**).

12.10.3.6.6. Install jumper wire on the cannon plugs removed from the #1 BSU (See **Figure 12.14**).

12.10.3.6.7. Reset circuit breakers.

12.10.3.6.8. Verify that the ESS AC Avionics Bus is powered.

12.10.3.7. **BSU #2 Failure Bypass Procedure (Used To Correct a Main AC Bus Failure Resulting from a BSU #2 Failure)**

12.10.3.7.1. Pull the BSU #2 Power, three phase, Main AC Bus circuit breaker located on the copilot's upper circuit breaker panel.

12.10.3.7.2. Pull the BSU #2 Power, three phase, ESS AC Bus circuit breaker located on the pilot's side circuit breaker panel.

12.10.3.7.3. Pull the BSU #2 ESS DC control power circuit breaker located on the copilot's lower circuit breaker panel. **CAUTION:** When performing jumping of BSU connectors J1 to J4 ensure proper phase connections are made (i.e., Phase A connected to Phase A). Crossing phases can cause damage to equipment

12.10.3.7.4. Remove J1 and J4 cannon plugs from the #2 BSU (See **Figure 12.15**).

12.10.3.7.5. Install jumper wire on the cannon plugs from the #2 BSU (See **Figure 12.15**).

12.10.3.7.6. Reset circuit breakers.

12.10.3.7.7. Verify that the Main AC Avionics Bus is powered.

12.10.3.8. ***GTC Stalls and Fails to Accelerate to "On Speed"**

12.10.3.8.1. Hold fingers over the acceleration limiter holes (see **Figure 12.3**) while an assistant starts GTC. Place and remove fingers over the holes several times during the start cycle until the start cycle sustains itself.

12.10.3.9. **GTC Fails to Rotate (No start light)**

12.10.3.9.1. Check the following prior to proceeding with the Hostile Environment Repair Procedure: GTC control circuit breaker, GTC fire handle, Isolated DC bus powered, and check GTC doors to ensure they are fully open.

12.10.3.9.2. For a failed door actuator, (doors open and close but do not fully open), disconnect the GTC door actuator, at attachment point on inside of upper door. Prop doors open (use broom handle, fuel dip stick, etc.). Disconnect door actuator cannon plug and install jumper wire from pin "D" to pin "E" and attempt restart.

12.10.3.9.2.1. When finished with the GTC, attach door actuator to upper door, remove jumper wire, and install cannon plug back on actuator. Use door switch to close door.

12.10.3.9.3. For failed door actuator (doors not open or not opened enough to allow disconnecting of actuator), remove four (4) screws in upper door. This will release the door actuator attaching bracket on which the door bypass switch is located. Prop doors open and attempt start. **NOTE:** Ensure bypass switch is fully extended.

12.10.3.9.3.1. When finished with GTC, close and secure the doors using two of

the four bypass switch mounting bracket screws.

12.10.3.9.4. If the limit switch is suspected faulty, at upper forward area of the intake, disconnect the two wires to the door bypass switch and connect the two input leads together. This will bypass the limit switches.

12.10.3.9.5. Start GTC.

12.10.3.10. **GTC Fails to Rotate (Start Light On)**

12.10.3.10.1. Remove all electrical power.

12.10.3.10.2. Open pilot's side circuit breaker panel.

12.10.3.10.3. Check GTC starter current limiter; (see **Figure 12.2**) if bad or suspect; replace as follows:

12.10.3.10.3.1. Disconnect battery.

12.10.3.10.3.2. Remove and replace current limiter with spare.

12.10.3.10.3.3. If no spares are available, open copilot's upper circuit breaker panel cover, remove cargo winch current limiter and use as a replacement.

12.10.3.10.4. If current limiter is good check GTC starter for broken wires and repair as necessary (see **Figure 12.3**).

12.10.3.10.5. Connect battery and attempt to start. If no rotation, tap starter relay and attempt another start.

12.10.3.10.6. If GTC still will not rotate, place the GTC control switch to START momentarily to energize the relay, then release the switch to RUN. Place a #4 jumper wire between post A1 and A2 of the GTC relay (see **Figure 12.2**) until the start light goes out, then remove the jumper wire.

12.10.3.11. ***GTC Fuel Vapor Lock**

12.10.3.11.1. Use petcock drain on bottom of aircraft below GTC to drain fuel while motoring GTC, then attempt start (see **Figure 12.4**).

12.10.3.11.2. If no fuel is present at petcock drain, check GTC fuel shutoff valve opening by momentarily positioning GTC control switch to "START" then "OFF".

12.10.3.11.3. If fuel shutoff valve fails to operate, remove cannon plug and open the valve manually.

12.10.3.11.4. Remove fuel line at GTC burner can and motor GTC until a steady stream of fuel is noted. This procedure may require several attempts to attain desired results.

12.10.3.11.5. Reconnect the line and attempt another start.

12.10.3.12. *** GTC Rotates-No Light OFF**

12.10.3.12.1. Check oil quantity.

12.10.3.12.2. Attempt to start while depressing the oil primer button. **NOTE:** A failed speed switch may prevent starter engagement up to 35 percent and/or the bleed air valve to open at 95 percent. If this occurs proceed as follows:

12.10.3.12.3. Remove Speed Switch cannon plug, place No. 16 jumper wires with pins from kit, from pin A to pin E (95 percent) and pin D to pin B (110 percent), and pin D to pin C (35 percent).

12.10.3.12.4. Start GTC. At approximately 35 percent pull wire from D to C out. **NOTE:** After starting an engine, remove power from GTC and remove jumper wires.

12.10.3.13. **Starting GTC with Failed Oil Pressure Switch**

12.10.3.13.1. A failed oil pressure switch can be detected during the start cycle by observing no ignition firing noise during start attempt and that fuel is present at the fuel pressure regulator drain and no detectable fuel in the nozzle hose. (See **Figure 12.3**)

12.10.3.13.2. Remove oil line to the oil pressure switch and momentarily rotate GTC. (Oil should spurt from the line opening.)

12.10.3.13.3. Remove oil pressure switch cannon plug and place jumper wires from pin "A" to pin "B" for ignition and from pin "C" to "D" for fuel. Secure the jumper wires with tape.

12.10.3.13.4. Attempt to start the GTC. If the oil pressure switch was faulty the start should be successful.

12.10.3.14. **APU Door Fails to Actuate**

12.10.3.14.1. Remove power from aircraft.

12.10.3.14.2. Remove APU compartment access panel and unsnap the APU heat shield blanket in the upper compartment, or remove the APU door actuator panel located aft of the APU door.

12.10.3.14.3. Remove the actuator cannon plug and install it on the APU (failed actuator) start receptacle. (See **Figure 12.7**)

12.10.3.14.4. If actuator is failed in the closed position, remove the actuator mount bolt from the fuselage and reposition the actuator to the INOP actuator position. (See **NOTE 1, Figure 12.7**) **NOTE:** This will position the door to 35 degrees open for engine start only. It must be positioned to the closed position prior to flight.

12.10.3.14.5. If the actuator is failed in an intermediate position, install the dummy actuator rod. **NOTE:** This will position the door to 15 degrees open for engine start.

12.10.3.14.6. Reinstall the heat shield blanket and secure the panel. **CAUTION:** During hot weather conditions, delay operation of the APU until immediately prior to engine start; then operate the APU only long enough to start one engine. **CAUTION:** APU operation in-flight with the door in the fixed flight position is not recommended since the door is part of the in-flight fire protection and provides fire containment within the fire proof area.

12.10.3.15. ***APU Fails to Rotate (Start Light Fails to Illuminate)**

12.10.3.15.1. Check the following items:

12.10.3.15.1.1. APU control circuit breaker-IN.

12.10.3.15.1.2. APU fire handle-IN.

12.10.3.15.1.3. Isolated bus for available power.

12.10.3.15.2. If the above items are checked and in the normal operating configuration, the Auto Start Relay (ASR, upper relay) on the APU is inoperative (see **Figure 12.6**). Swap the ASR and the Fuel Holding Relay (FHR, lower relay) and attempt another start.

12.10.3.16. **APU Fails to Rotate (Start Light Illuminates)**

12.10.3.16.1. Remove all electrical power from aircraft.

12.10.3.16.2. Open pilot's side circuit breaker panel.

12.10.3.16.3. Check APU current limiter, if bad or suspect, replace as follows. (see **Figure 12.2**)

12.10.3.16.3.1. Disconnect the aircraft battery.

12.10.3.16.3.2. Remove and replace the current limiter with available spare.

12.10.3.16.3.3. If no spares are available, open the copilot's upper circuit breaker panel and remove the cargo winch current limiter and use as a replacement for the APU current limiter.

12.10.3.16.3.4. If the current limiter is good, check APU starter (see **Figure 12.6**) for broken wires and repair as necessary.

12.10.3.16.3.5. Connect the aircraft battery and attempt another start. If no rotation is noted, "tap" the start relay.

12.10.3.16.3.6. If APU still will not rotate, place the APU control switch to START momentarily, and then release the switch to RUN. Place a #4 jumper wire between post A-1 and post A-2 of the APU start relay until the start light goes out, then remove the jumper wire.

12.10.3.17. **APU Rotates – Negative Ignition – No Ignition Noise**

12.10.3.17.1. Swap the Fuel Holding Relay (FHR) with the Auto Start Relay (ASR) (see **Figure 12.6**).

12.10.3.17.2. Attempt to start APU.

12.10.3.17.3. If APU fails to start – Remove oil pressure switch cannon plug and place a jumper wire from pins "A" to "B" (ignition) and another jumper wire from pins "C" to "E" (fuel). Secure with tape. **CAUTION:** Prior to jumping oil pressure switch, ensure oil pressure line from the pressure switch and motor the APU. Oil should spurt from the line if the pump is working.

12.10.3.17.4. Attempt to start the APU.

12.10.3.17.5. If APU does not start, the igniter, exciter, or ignition harness may be faulty.

12.10.3.18. **APU Rotates – Negative Ignition – With Ignition Noise**

12.10.3.18.1. Manually open the APU motor operated fuel shutoff valve as follows: **NOTE:** APU shutoff valve is located in the aft outboard corner of the number two dry bay (tag ID "O").

12.10.3.18.1.1. Ensure the APU Control switch is in the "OFF" position.

12.10.3.18.1.2. Pull the APU Control circuit breaker on the isolated DC bus.

12.10.3.18.1.3. Remove the number 2 dry bay access panel.

12.10.3.18.1.4. Remove APU fuel shutoff valve cannon plug and secure.

12.10.3.18.1.5. Manually open the APU fuel shutoff valve.

12.10.3.18.1.6. Reinstall the number 2 dry bay panel.

12.10.3.18.2. Attempt to start APU.

12.10.3.18.3. If APU fails to start, swap the APU fuel control solenoid operated shutoff valve with the overspeed test solenoid located on the air shroud. Look on the inboard side of the APU behind and above the oil cooler (see **Figure 12.5**). **NOTE:** To shut down the APU, the fire handle must be pulled.

12.10.3.19. **APU Will Not Stay Running – After On Speed**

12.10.3.19.1. Disconnect forward bleed air pressure line from overspeed test solenoid valve, and plug with a number 4 plug (see **Figure 12.5**).

12.10.3.19.2. Start APU. If APU continues to run, the overspeed test solenoid is bad. **NOTE:** To shut down APU, the fire handle must be pulled. **NOTE:** Reset fire handle after rotation stops to prevent aircraft battery drain. **NOTE:** The APU is protected from overspeed by the mechanical flyweight system in the centrifugal speed switch assembly.

12.10.3.20. **Leaking Brake**

12.10.3.20.1. Disconnect brake lines from both sides of the brake shuttle valve.

12.10.3.20.2. Use plugs and caps from the HERK to seal the brake lines and shuttle valve.

12.10.3.20.3. Secure disconnected hose ends to prevent interference with landing gear movement during retraction and extension. **NOTE:** Both landing and takeoff performance calculations will be affected by a disconnected brake. **Use RCR of 5 for all performance calculations.**

12.10.3.21. **Moving an Aircraft with Flat Main Landing Gear Tire. WARNING:** Use this procedure only as a last resort to move an aircraft out of a hostile environment. Reduce aircraft weight as much as possible by unloading cargo, defueling, or burning off fuel. Some fuel may be transferred out of the wing corresponding to the flat tire and into the opposite wing. Be aware of wing tip and propeller ground clearance.

12.10.3.21.1. Install main gear towing/jacking fitting on the strut with the flat tire.

12.10.3.21.2. Install a 10,000 lb. chain around the top of the strut with the flat tire.

12.10.3.21.3. Connect a tiedown device to the towing fitting. Connect the chain to the device and tighten.

12.10.3.21.4. Open the Schrader valve at the top end of the MLG strut and bleed all air pressure from the strut. **WARNING:** Do not open Schrader valve more than ¾ of a turn. It may be necessary to use the valve stem to bleed the pressure from the strut. Do not allow the lower nut to loosen. If the lower nut becomes loose it may allow the Schrader valve to blow out of the strut body.

12.10.3.21.5. Compress the strut by any means possible such as the use of a "J" bar, chocks, milk stool or taxiing the aircraft onto shoring in order to elevate the flat tire.

12.10.3.21.6. When the strut has been compressed to the maximum extent possible, tighten the tiedown device.

12.10.3.21.7. Remove the flat tire if time and situation permits.

12.10.3.21.8. Flight should be made with the landing gear extended and the landing gear control circuit breaker pulled. When safely airborne, pull the touchdown relay circuit breaker. Refer to the flight manual for airspeed limitations with landing gear extended. After landing, reset the touchdown relay circuit breaker.

12.10.3.22. **Failed Engine Driven Hydraulic Pump**

12.10.3.22.1. Disconnect the failed engine driven hydraulic pump from the gearbox and secure to any available structure with safety wire. Do not disconnect hydraulic lines.

12.10.3.22.2. Install a starter pad in place of the failed hydraulic pump.

12.10.3.22.3. If time and resources permit, the pump may be removed from the nacelle as follows:

12.10.3.22.3.1. With the ESS DC bus powered, place the corresponding hydraulic pump switch to the OFF position. This will close the hydraulic shutoff valve.

12.10.3.22.3.2. Disconnect and plug all hydraulic lines to the pump.

12.10.3.22.3.3. Remove the failed pump and install a starter pad in its place. **CAUTION:** The hydraulic pump switch must remain in the OFF position as long as the hydraulic pump is removed.

12.10.3.23. **Failed Fuel Valve(s)**

12.10.3.23.1. Locate the failed valve(s) and remove the cannon plug(s).

12.10.3.23.2. Manually open or close the valve(s) by actuating the manual arm. **NOTE:** On some aircraft, the dump mast shutoff valves must be manually closed to refuel. Ensure these valves are reopened prior to flight.

12.10.3.24. **Failed Speed Sensitive Switch. NOTE:** The engine will not airstart once it is shutdown inflight.

12.10.3.24.1. Pull Ignition Control Circuit Breaker on Copilot's Lower circuit breaker Panel. **NOTE:** Any time the ignition control circuit breaker is pulled on an inboard engine, the ice detection system is inoperative.

12.10.3.24.2. Open lower left side engine cowling on the affected engine.

12.10.3.24.3. Remove the speed sensitive control cannon plug (see **Figure 12.8**).

12.10.3.24.4. Install the pre-wired cannon plug from the HERK and secure it in place (see **Figure 12.8** and **Figure 12.10**). **CAUTION:** Pre-wired cannon plugs used as jumpers must be wired as shown in **Figure 12.10**.

12.10.3.24.5. Secure all engine cowlings.

12.10.3.24.6. Begin the start sequence (in normal ground idle) while monitoring tachometer.

12.10.3.24.7. At 16% engine RPM, reset the Ignition Control circuit breaker.

12.10.3.24.8. At 94% engine RPM, pull the Ignition Control circuit breaker. **NOTE:** The secondary fuel pump pressure light will be illuminated and the pumps will be in parallel operation until the Ignition Control circuit breaker is pulled.

12.10.3.24.9. After landing, use normal ground idle only and shutdown the affected engine as follows:

12.10.3.24.9.1. Ignition Control circuit breaker – RESET.

12.10.3.24.9.2. Condition Lever – GROUND STOP. **NOTE:** When the Ignition Control circuit breaker is reset prior to engine shutdown, approximately two seconds is required for the fuel control shutoff valve to close. If the engine continues to run when the condition lever is placed in GROUND STOP, place the Condition Lever to FEATHER.

12.10.3.24.9.3. When the fuel flow indicator drops to zero and RPM is decreasing, pull the Ignition Control circuit breaker.

12.10.3.25. **Failed Ignition Control Relay**

12.10.3.25.1. Pull the Ignition Control circuit breaker. **NOTE:** Any time the ignition control circuit breaker is pulled on an inboard engine, the ice detection system is inoperative.

12.10.3.25.2. Open the lower left engine cowling and locate the Ignition Control Relay (see **Figure 2.8**).

12.10.3.25.3. Disconnect the cannon plug from the relay and install the pre-wired cannon plug from the HERK. **CAUTION:** Pre-wired cannon plugs used as jumpers must be wired as shown in **Figure 12.10**.

12.10.3.25.4. Close and secure cowling.

12.10.3.25.5. Start the engine in Normal Ground Idle and proceed as follows:

12.10.3.25.5.1. At 16% engine RPM, reset the Ignition Control circuit breaker.

12.10.3.25.5.2. At 65% engine RPM, pull the Ignition Control circuit breaker.

12.10.3.25.6. For engine shutdown following landing, proceed as follows:

12.10.3.25.6.1. Reset the Ignition Control circuit breaker.

12.10.3.25.6.2. Place the Condition Lever to GROUND STOP.

12.10.3.25.6.3. When fuel flow drops to zero and RPM decreases, pull the Ignition Control circuit breaker.

12.10.3.26. **Failed Speed Sensitive Valve. CAUTION:** This procedure will render the torquemeter shroud anti-icing system inoperative. Icing conditions should be avoided.

12.10.3.26.1. Open the lower left side engine cowling on the affected engine.

12.10.3.26.2. Disconnect the air supply line to the speed sensitive valve (see **Figure 12.8**) at the bottom of the filter element installed in the line and install a #6 plug in the open line. **WARNING:** Install only the AN806S6 plug stock number 4730007629456. Using improper plug may result in a bleed air leak and engine power loss.

12.10.3.26.3. Disconnect the torquemeter shroud anti-icing at the left side of the balance line fitting and secure it.

12.10.3.26.4. Disconnect the line from the top side of the speed sensitive valve and connect it to the balancing line fitting where the torquemeter shroud anti-icing was connected.

12.10.3.26.5. Secure any loose hardware then close and secure engine cowling. **NOTE:** Do not start the affected engine first. Select another engine for the first engine to be started in order to supply bleed air to the affected engine.

12.10.3.26.6. Place the Engine Inlet Duct Anti-icing switch for the affected engine to ON.

12.10.3.26.7. Start the affected engine while watching RPM and stand by to activate the Prop and Engine Anti-icing Master Switch.

12.10.3.26.8. At 94% engine RPM, place the Prop and Engine Anti-icing Master switch to MANUAL. The acceleration bleed valves should close at this time. **WARNING:** When the Prop and Engine Anti-icing Master switch is selected to the MANUAL position, the engine anti-ice and prop anti-ice/de-ice systems will be actuated if their respective switches are turned on. These switches are normally turned on during the Before Takeoff Checklist but should be delayed using this procedure unless absolutely necessary for safe operation. Turning these switches to the ON position with the Prop and Engine Anti-icing Master switch selected to MANUAL will activate the systems and rob the engines of torque. Overheating of the blade/spinner anti-ice/de-ice systems will occur if the aircraft remains on the ground for longer than the two cycle operating limit. **NOTE:** In this configuration the affected engine will have continuous anti-icing and an associated reduction in torque will be noted.

12.10.3.26.9. After landing, shutdown the engine in NORMAL GROUND IDLE. **CAUTION:** Do not use “LOW SPEED GROUND IDLE” during ground operations. To do so may cause the engine to stall/over temperature.

12.10.3.27. **Failed Fuel Shutoff Valve on Fuel Control**

12.10.3.27.1. Open lower left side cowling on affected engine.

12.10.3.27.2. Remove the defective fuel control shutoff actuator (Geneva lock) from the fuel control (see **Figure 2.8**).

12.10.3.27.3. Insert a small common screwdriver into the spline end of the fuel control and rotate in a counterclockwise direction until the fuel control opens. There will be no fuel leakage from where the actuator was removed.

12.10.3.27.4. Close the engine cowling and secure all fasteners. **NOTE:** During engine start, abnormal situations such as excessive fuel coming from drain mast, tailpipe torching and a higher than normal start TIT can be expected.

12.10.3.27.5. For engine shutdown, place the condition lever to FEATHER rather than GROUND STOP for the affected engine.

12.10.3.28. **Failed Engine Fuel Drip Valve** **NOTE:** Prior to using this procedure, use enrichment on next engine start. The sudden surge of pressure should close the drip valve.

12.10.3.28.1. If enrichment fails to close the drip valve, shutdown the engine and plug or crimp the drip valve drain line closed.

12.10.3.29. **Prop Fails to Rotate (No Light In Button) (GTC Equipped Aircraft).** **CAUTION:** Insure the oil shutoff valve circuit breaker is set (in).

12.10.3.29.1. If it is determined or suspected that no power is available to the starter button, proceed as follows:

12.10.3.29.1.1. Select another engine which is not operating and close its bleed air valve. (This bleed valve must remain closed throughout the start cycle.)

12.10.3.29.1.2. Start the defective engine normally while simultaneously holding in the starter button for the selected non-operating engine. Both buttons must be held in until 60% engine RPM.

12.10.3.30. **Prop Fails To Rotate (No Light In Button) (APU Equipped aircraft, Engine Ground Start Interlock Relay Defective)**

12.10.3.30.1. Pull the start control and oil shutoff valve circuit breakers.

12.10.3.30.2. Locate the Ground Start Interlock Relay on the aft upper right side of FS 245.

12.10.3.30.3. Disconnect wire on “A1” terminal of relay and reconnect it to “A2” terminal with existing wire.

12.10.3.30.4. Reset start control and oil shutoff valve circuit breakers and attempt start.

12.10.3.31. **Failed Bleed Air Valve (Engine Fails To Rotate)**

12.10.3.31.1. Place the bleed air valve switch to “OPEN”. Open horse collar and “tap” the motor mechanism on the bleed air valve.

12.10.3.31.2. If the valve still fails to open, remove the motor from the valve. Manually open the valve and secure the lever to one of the mount holes with safety wire. **WARNING:** Once bleed air valve has been secured in the open position, it

will not be possible to close the valve for wing isolation procedures. Engine shut down will be required to isolate the wing.

12.10.3.31.3. Close the horse collar and attempt engine start.

12.10.3.32. **Failed Bleed Air Regulator (Engine Fails To Rotate)**

12.10.3.32.1. Pressurize bleed air manifold. **NOTE:** Bleed air regulators require bleed air to operate.

12.10.3.32.2. Place bleed air regulator switch to "OVERRIDE".

12.10.3.32.3. Open horse collar and "tap" the Bleed Air Regulator Valve.

12.10.3.32.4. If valve still fails to open, manually lock the valve in the "OPEN" position. **WARNING:** Once the bleed air regulator has been locked in the open position, it will not be possible to close the valve for wing isolation procedures.

12.10.3.33. **Severe Fuel Leaks**

12.10.3.33.1. Fuel leaks caused from punctures or small arms fire can be plugged by using the wooden plugs and Pig Repair Putty from the HERK. If a high number of plugs are used, it may be necessary (as time permits) to break or cut them off near the wing surface to reduce drag.

Table 12.1. Hostile Environment Repair Kit (HERK) Parts List.

HOSTILE ENVIRONMENT REPAIR KIT INVENTORY LIST	
NOTE: STOCK NUMBERS MAY CHANGE WITHOUT NOTICE. NUMBERS SHOULD BE VERIFIED WITH SUPPLY ORGANIZATIONS WHEN ORDERING.	
ITEM	**NSN**
1. ELECTRICAL TAPE	5970004194291
2. VISE GRIP PLIERS, 8 1/2" (2 EA.)	5120004941911
3. ALLEN WRENCH, 5/32, 6 point (long)	5120001985413
4. CHANNEL LOCK PLIERS, 10"	5120002780352
5. GENEVA LOCK WRENCH	5120007158467
6. STARTER WRENCH	5120006843605
7. SMALL BLADE COMMON SCREWDRIVER	5120002363127
8. IGNITION RELAY CANNON PLUG	5935000139655
9. SPEED SWITCH CANNON PLUG	5935012309542
10. BRAKE SHUTTLE VALVE PLUG, #6 MS (2 EA.)	4730002033709
11. BRAKE PLUG, #8 MS (2 EA.)	4730002028341
12. BRAKE LINE CAP, #8 (2 EA.)	4730002898634
13. PIG REPAIR PUTTY (REPLACES OYLTYTE)	8030012652895
14. WIRE BUNDLE TIES (20)	5975010132742
15. WOOD PLUG (LARGE)	5510002559492
16. WOOD PLUG (SMALL)	5510002559493
17. BRASS BAR, 7/16 (STOCK BY FOOT) (Cut two 4 inch lengths per kit)	9530002289235
18. BRASS BAR, 3/8 (STOCK BY FOOT) (Cut two 4 inch lengths per kit) (Use with Maintenance Free Battery)	9530002289234
19. BRASS BAR, 5/16 (STOCK BY FOOT) (Cut one 2 inch length per kit)	9525002289233
20. #10 GAUGE WIRE WITH ALLIGATOR CLAMPS	

A. 16 INCH WIRE (ORDER BY FOOT) B. ALLIGATOR CLAMPS (PACK OF 6 EA.)	6145006006051 5999002045206
21. #16 GAUGE JUMPER WIRE WITH TERMINALS (2 EA.) A. 7 INCH WIRE (ORDER BY FOOT) *B. PINS FROM SPEED SWITCH CANNON PLUG	 6145000138651 5935012309542
22. #4 GAUGE JUMPER WIRE WITH TERMINALS (18 INCHES LONG) A. WIRE (ORDER BY FOOT) B. 3/8 INCH TERMINALS	 6154007563030 5940005574338
23. #16 GAUGE JUMPER WIRE WITH TERMINALS (10 INCHES LONG) A. WIRE (ORDER BY FOOT) B. TERMINALS #10 (PACK OF 50 EACH)	 6145000138651 59400014347780
24. OVERSPEED SOLENOID VALVE CAP, #4 (1 EA.)	4730002785006
25. OVERSPEED SOLENOID VALVE PLUG, #4 (1 EA.)	4730005424994
26. #10 WIRE AND CANNON PLUGS WIRED TO BYPASS BSU (12 INCHES LONG) A. WIRE (ORDER BY FOOT) B. CONNECTOR C. CONNECTOR	 6145006006051 5935011865487 5935011686755
**27. APU DUMMY ACTUATOR ROD A. BEARING END APU ACTUATOR ROD B. NUT, APU ACTUATOR ROD END	 3120001071678 5310008810944
28. SPEED SENSITIVIE VALVE BLEED AIR LINE #6 PLUG AN806S6 (1 ea).	4730007629456.
* Cannon plug must be ordered and the pins removed from the plug for use. Each cannon plug contains six pins. ** The APU dummy actuator rod must be locally manufactured IAW TO 1C-130H-2-00GE-00-1, Figure 5-26.	

Figure 12.1. Alternate DC Power Connections.

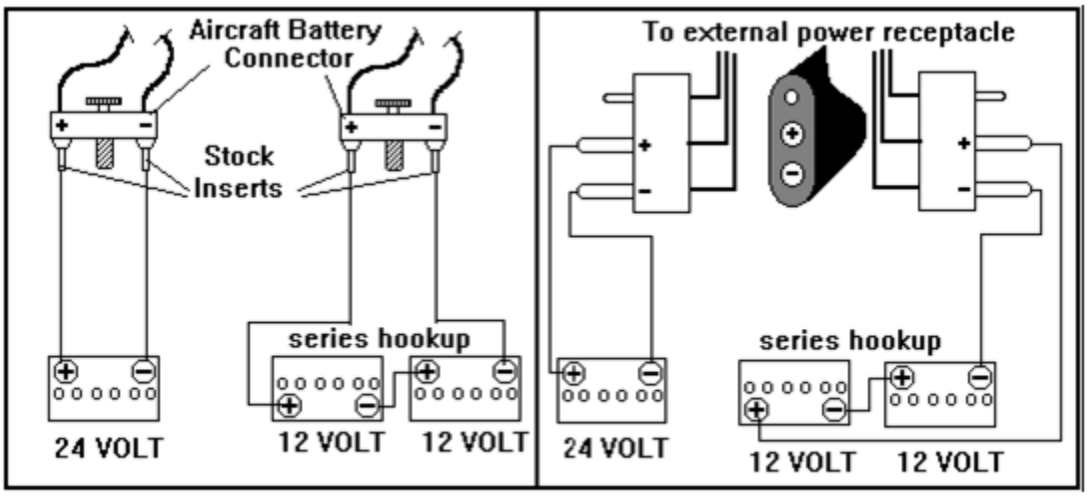

OPTION ONE **OPTION TWO**

Figure 12.2. Reverse Current Relay.

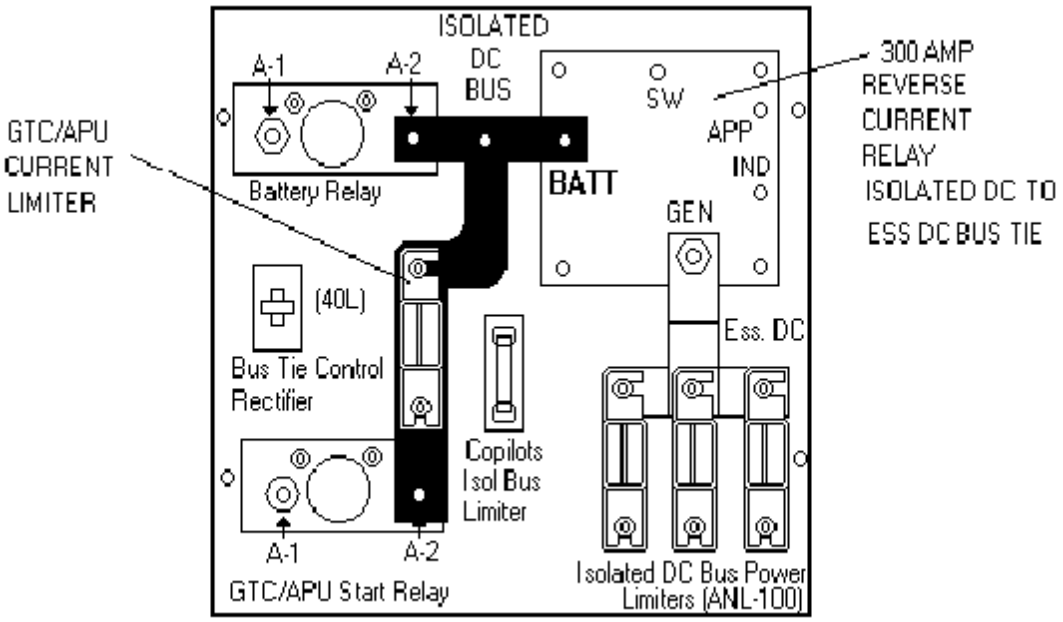

Figure 12.3. Gas Turbine Compressor.

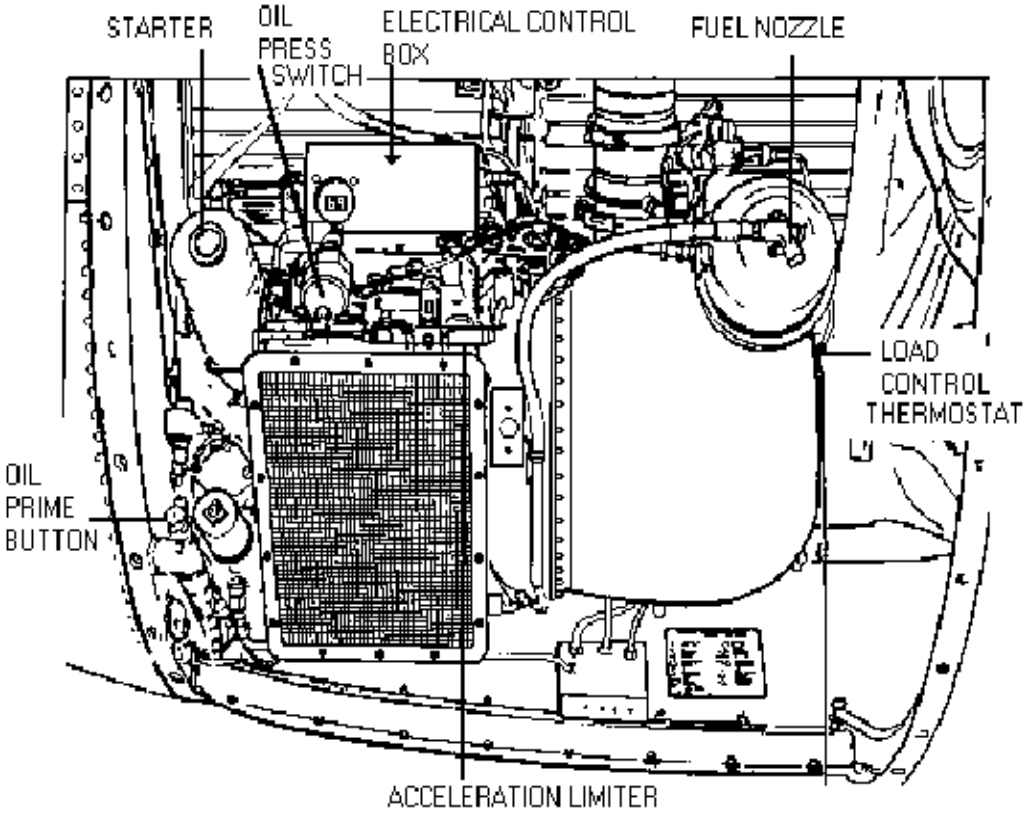

Figure 12.4. GTC Fuel Supply.

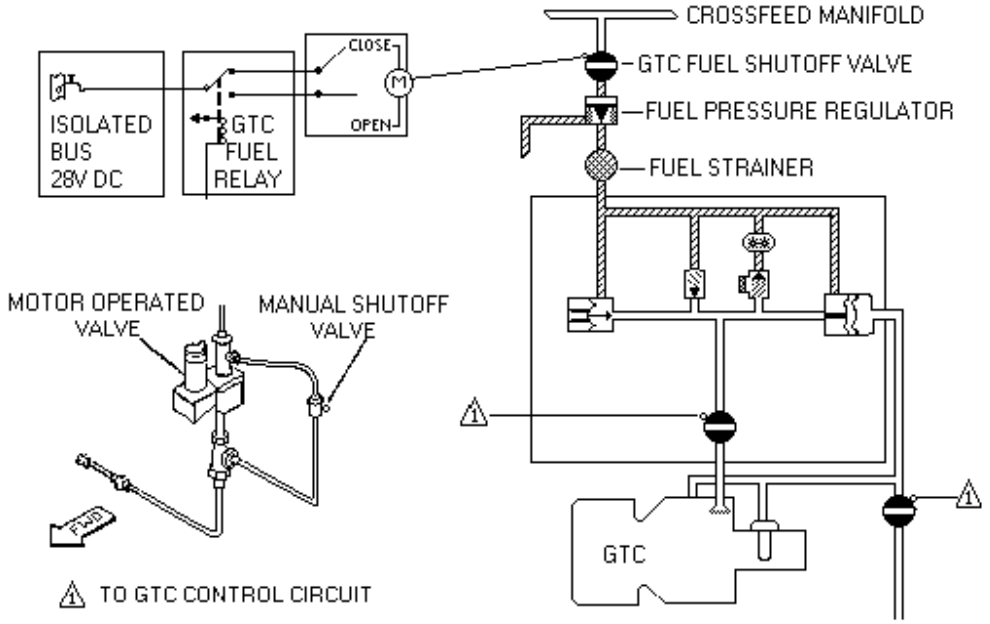

Figure 12.5. APU (Right Side View).

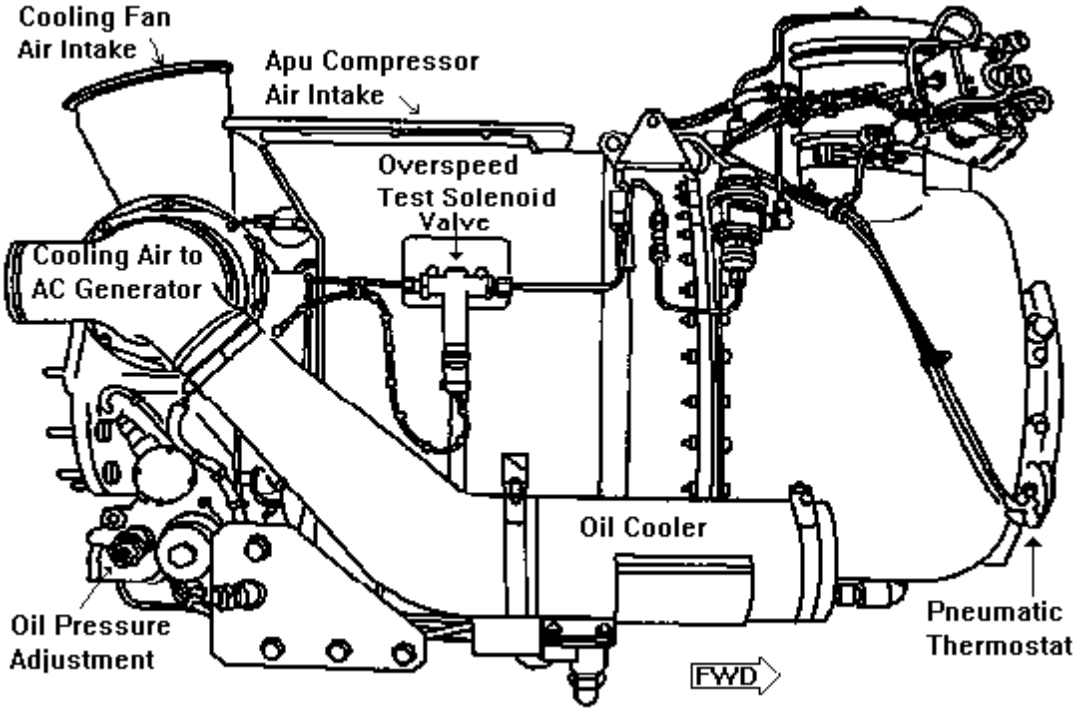

Figure 12.6. APU (Left Side View).

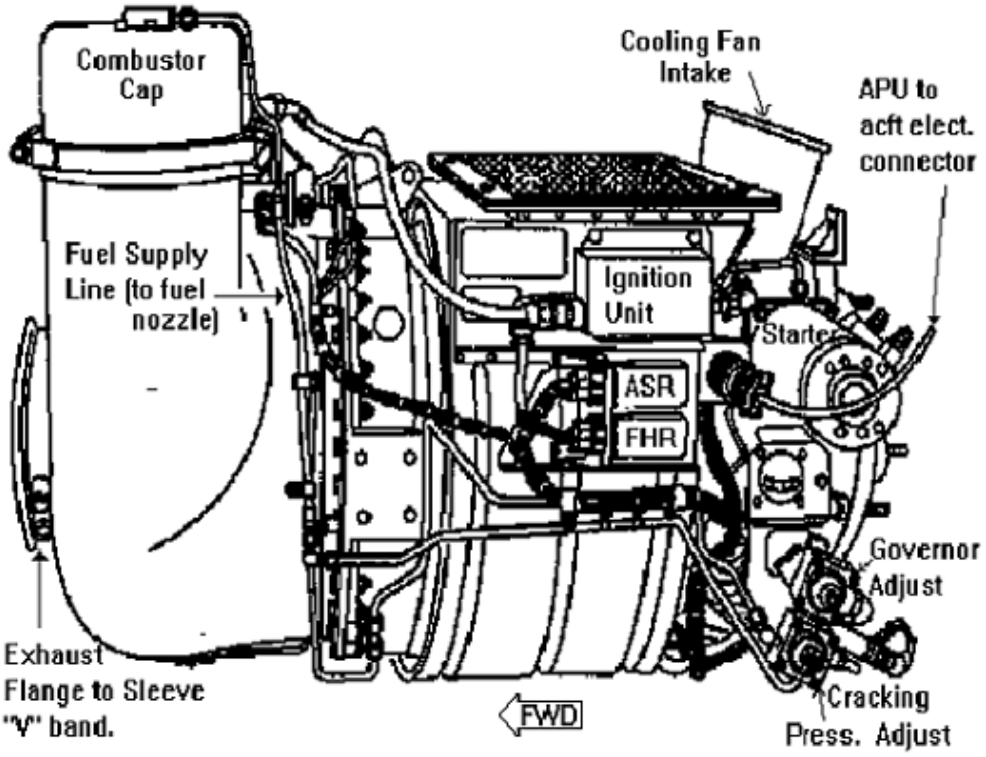

Figure 12.7. APU Inlet Door Assembly.

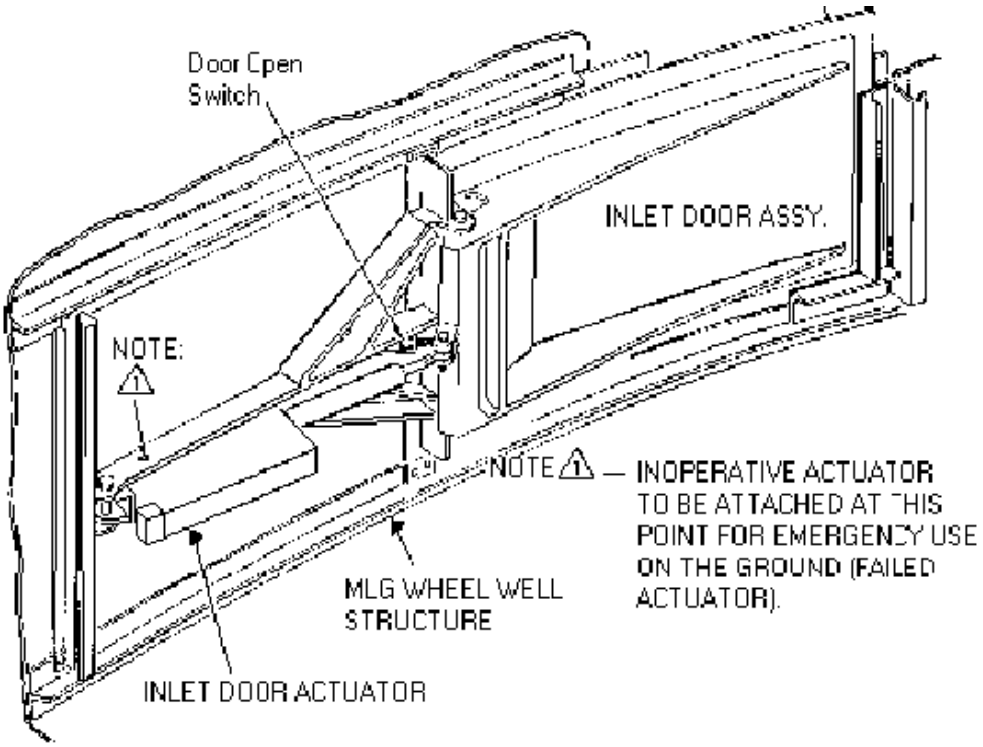

Figure 12.8. Engine Accessory Locations.

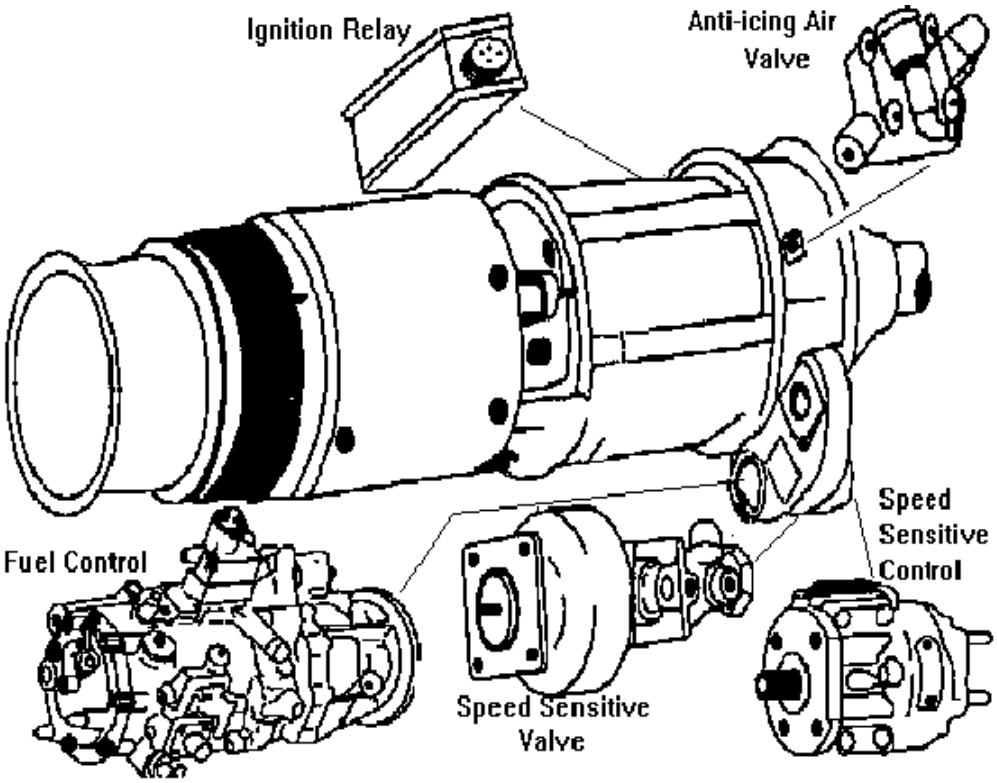

Figure 12.9. Gear Box Accessory Locations.

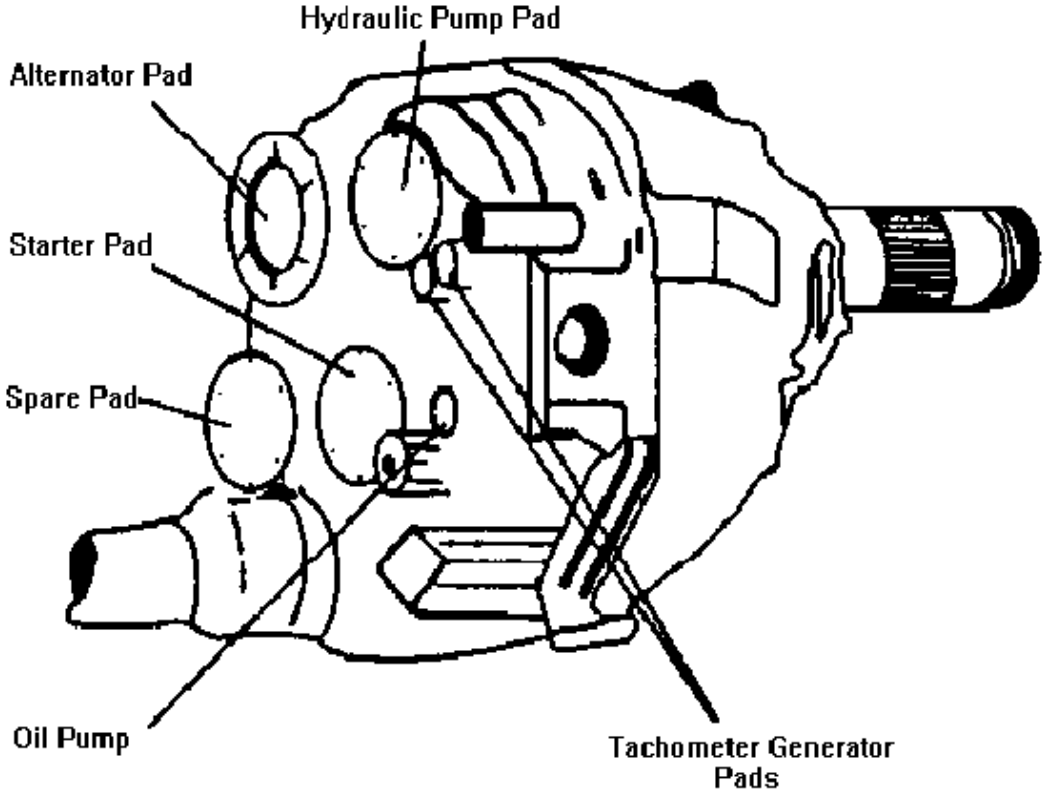

Figure 12.10. Prewired Cannon Plugs (Speed Sensitive Control and Ignition Relay).

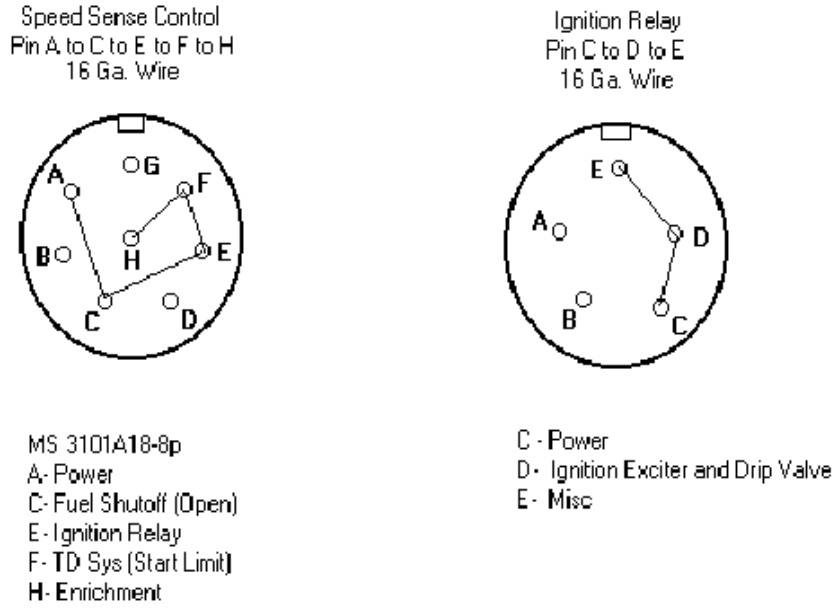

Figure 12.11. Bypassing the INS Reverse Current Relay.

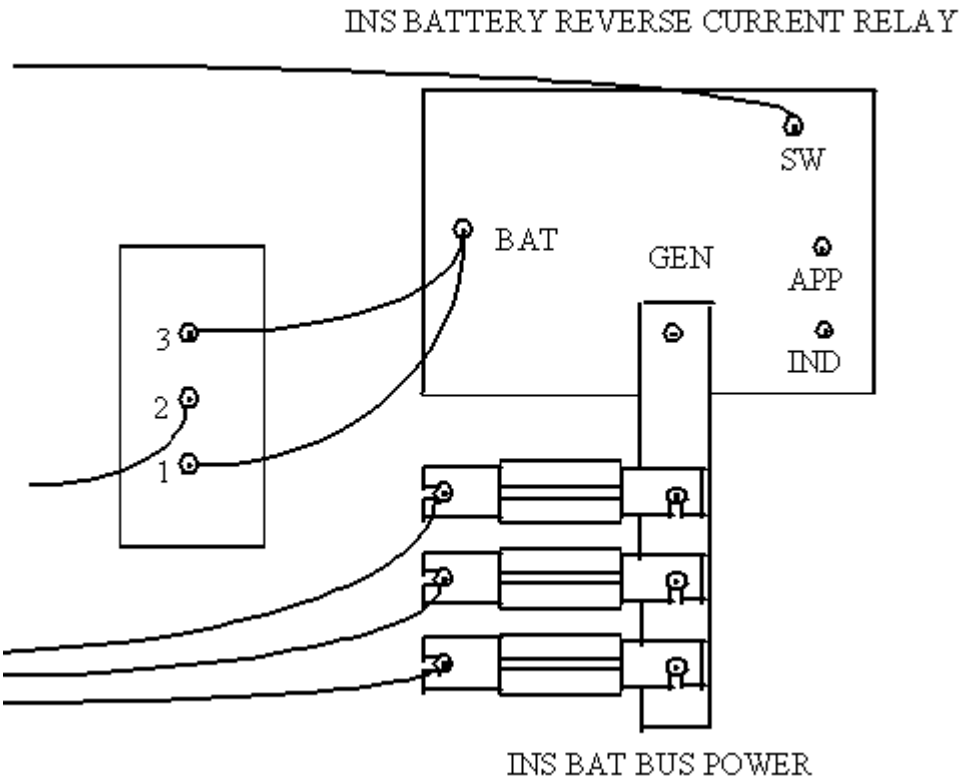

Figure 12.12. Jumping Bus Switching Unit (BSU).

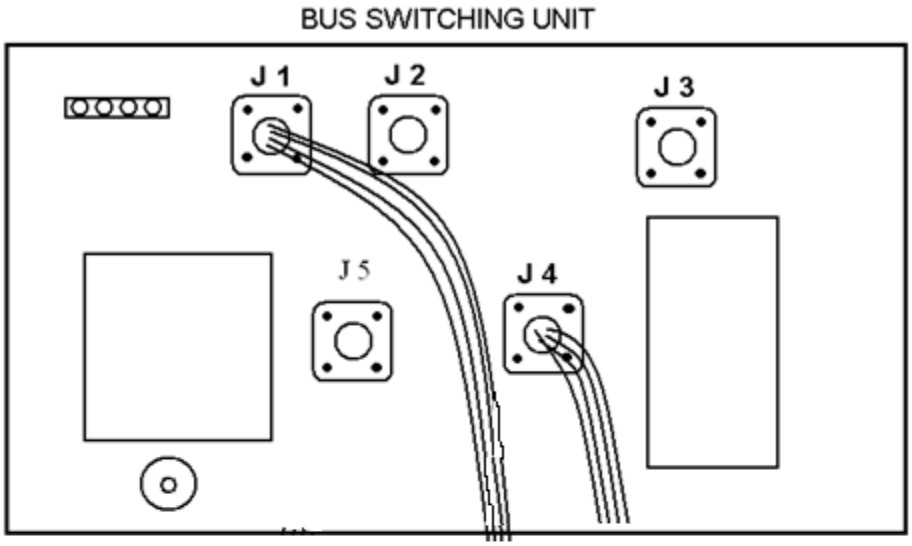

Remove cannon plugs from the J1 and J4 connectors

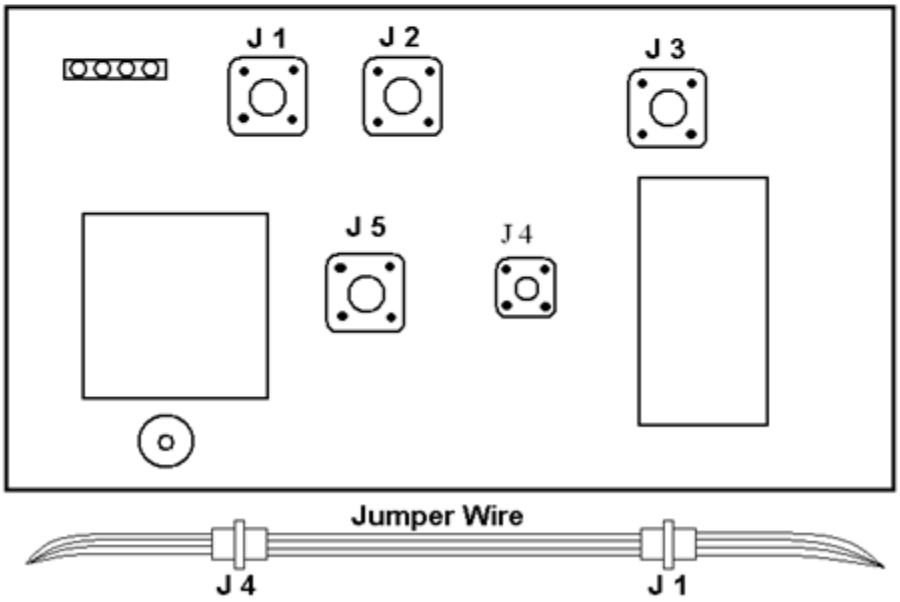

Install Jumper Wire between cannon plugs removed from J1 and J4

Figure 12.13. BSU #1 Cannon plug.

FROM J1 (P1722A)	TO J4 (P1719A)
PIN A	PIN A
PIN B	PIN B
PIN C	PIN C

Figure 12.14. BSU#2 Cannon Plug.

FROM J1 (P1722B)	TO J4 (P1719B)
PIN A	PIN A
PIN B	PIN B
PIN C	PIN C

Chapter 13

CARGO AND PASSENGER PROCEDURES

13.1. General. The loadmaster coordinates loading or offloading with air terminal operations or the shipping agency; plans loads; provides in-flight services to passengers; and supervises onloading or off-loading operations. Performs preflight and postflight of aircraft and systems and computes aircraft weight and balance; provides for safety and comfort of passengers/duty passengers (hereafter, included as passengers such as Space-A)/ troops, and security of cargo, mail, and baggage during flight. Prepares and rigs equipment for airdrop, and participates in the aerial delivery of equipment, supplies, and personnel.

13.2. Responsibilities for Aircraft Loading.

13.2.1. AMC Designated Stations:

13.2.1.1. Aerial port personnel are responsible for selecting cargo and mail for airlift, promptly completing documentation, palletizing cargo, load planning (as required), computing load distribution, and moving cargo to and from the aircraft to meet scheduled departure. Before starting loading operations, they will advise the loadmaster of destination, size, weight, and types of cargo (classified, hazardous, etc.) to permit proper positioning. They will also coordinate traffic activities affecting loading and offloading, and assign sufficient aerial port loading personnel for cargo loading. Aerial port personnel are responsible for safe positioning of MHE and cargo to or from the aircraft cargo door, ramp or auxiliary ground loading ramps. Under the supervision of the loadmaster, aerial port personnel will prepare the aircraft for loading, stow loading equipment if the aircraft is not to be reloaded, physically load the aircraft, tie down cargo and equipment, release tie down and physically offload cargo.

13.2.1.2. The loadmaster is responsible for aircraft preflight, load planning (as required), certifying load plans, preparing weight and balance documentation, operating aircraft equipment, and supervising cargo tie down. The loadmaster coordinates with the loading crew supervisor to validate the cargo against manifests, supervises and directs on/offloading and is responsible for safe movement of cargo into and out of the aircraft. The loadmaster will notify the PIC, C2, or terminal operations officer if loading personnel are injured or cargo, aircraft equipment, or aircraft structure is damaged during on/offloading. The loadmaster will brief the PIC on any hazardous cargo and jettisonability prior to engine start.

13.2.1.3. Loads planned by qualified load planners will be accepted by the aircraft loadmaster and loaded aboard the aircraft as planned, unless the load or any portion of it will compromise flight safety or does not comply with applicable aircraft technical orders or USAF/MAJCOM publications. If cargo is refused or rearranged for these reasons, forward all applicable information, including a copy of the load plan, to MAJCOM Stan/Eval through Stan/Eval channels. AMC personnel attach an AMC Form 54, *Aircraft Commander's Report on Services/Facilities.* **EXCEPTION:** The loadmaster may deviate from load plans to facilitate ease of on/offloading, accommodate additional passengers, alleviate unnecessary aircraft reconfiguration and if practical to load to optimum aircraft performance CG without submitting documentation. The loadmaster

must take into consideration the next station's cargo configuration requirements and will ensure the aircraft is in proper weight and balance limits. A new load plan is not required.

13.2.1.4. The loadmaster is the on-scene expert for load planning and accepting cargo for airlift. Some loads are not specifically detailed in applicable directives and require the loadmaster to use his/her best judgment based on training, experience, and knowledge to determine the best and safest method of loading the cargo. When difficulties arise, they should seek the advice of other personnel (i.e., squadron, group, wing or MAJCOM Stan/Eval personnel).

13.2.1.4.1. Non-standard cargo/equipment that exceed limitations, and/or requires excessive shoring, and is not contained in the aircraft loading manuals requires certification for air shipment. The shipper will provide a copy of the certification to the loadmaster prior to loading. If the certification letter with loading instructions/requirements is not provided to the loadmaster the cargo will not be loaded. Contact Air Transportability Test Loading Agency (ATTLA) or ASC/ENFC at Wright Patterson AFB, OH, voicemail (937) 255-2330/2547 or MAJCOM Stan/Eval for questions concerning cargo certification.

13.2.1.4.2. IAW with ATTLA memo, dated 7 May 2002, certification memos prior to 1993 are validated to include blanket airlift approval for C-130 airlift. ATTLA certifications for cargo remain valid until superceded or rescinded. Cargo offered for airlift utilizing an ATTLA certification is considered a TO 1C-130A-9, Chapter 6 equivalent and will not be rejected for airlift unless safety is compromised or the item has been altered from the approved certification. One-time ATTLA airlift approvals are annotated on the certification letter. The aircraft loadmaster is the final authority in determining the validity of certifications on C-130 aircraft. If the loadmaster determines the cargo is incompatible with aircraft dimensions, a Cargo On/Off Loading Validation Worksheet following the procedures in **paragraph 13.9** is required to be filled out and forwarded through Stan/Eval channels to HQ AMC/A3VX. State the reason for rejection or comments and recommendations that aided in a safe on/offload.

13.2.2. At locations without AMC air terminal or traffic personnel, the shipper assumes responsibilities in **paragraph 13.2.1.1** and provides sufficient qualified personnel and MHE for on/offloading. Loadmaster responsibilities and authority are the same as described in **paragraphs 13.2.1.2** and **13.2.1.3**.

13.2.3. During JA/ATT, SAAM, USAF mobility, and contingency missions, the loadmaster can accept DD Form 2133, *Joint Airlift Inspection Record*, as valid pre-inspection of equipment being offered for air shipment**.** This form, validated by two joint inspector signatures (user and transporting force), may be used in lieu of applicable portions of the vehicle inspection portion of the applicable loading checklist. However, this does not relieve the loadmaster from ensuring accompanying loads are secured prior to takeoff. The DD Form 2133 will not be used to document preparation of hazardous materials. This will be accomplished using the Shipper's Declaration for Dangerous Goods.

13.3. Emergency Exits and Safety Aisles. Safety aisles will be IAW AFI11-2C-130V3 Addenda A, *C-130 Configuration/Mission Planning*.

13.3.1. All passenger hand carried items must be of a size to fit under the seat and must not obstruct the safety aisle(s). Any items that do not fit under a seat, or obstruct an aisle way will be stowed with checked baggage and secured for flight.

13.4. Pre-Mission Duties.

13.4.1. Cargo Missions. See **paragraph 12.4.1** for Concurrent Servicing guidelines.

13.4.1.1. The loadmaster will coordinate with aerial port personnel to establish loading times. Loading times that differ from the normal pre-departure sequence of events will be established, with PIC coordination, before the loadmaster enters crew rest. Loading time is governed by the type of load and complexity of loading procedures (bulk, palletized, etc.) not by port saturation or management of aerial port workload levels. When reporting for duty, the loadmaster checks in with the air terminal operations center or other designated location to obtain load brief and assist in load planning as required.

13.4.1.2. Proper cargo documentation will accompany each load. A consolidated statement (manifest) will be delivered to the aircraft prior to departure unless one is not available due to a lack or failure of the manifest processing equipment. In this case, a cargo listing or load plan with Transportation Control Numbers (TCN) will accompany the load. **NOTE:** Computer generated load plans may be accepted for unilateral training loads.

13.4.1.3. Tiedown equipment will be exchanged on a one-for-one basis. If this is not possible, annotate the AF Form 4069, *Tiedown Equipment Checklist*. At non-AMC stations, 463L pallets will normally be exchanged on a one-for-one basis.

13.4.1.4. Fleet Service Checklist.

13.4.1.4.1. Loadmasters will make every effort to ensure that the AF Form 4128, *Fleet Service Checklist*, is signed by the fleet service representative and placed aboard the aircraft prior to departure if this service is provided.

13.4.1.4.2. Annotate inventory changes in section III. Place item nomenclature, increase/decrease amounts, station, date, and reason for change.

13.4.1.5. Duty/Preflight Loadmaster Operations. These Loadmaster duties provide flexibility for operational requirements when units/crews are deployed on tactical, contingency or exercise operations. Preflight/Duty Loadmaster(s) will receive crew rest prior to assuming duty for preflight/loading operations. When assigned/scheduled to perform duties, all necessary preflight checklists will be accomplished for the assigned/scheduled mission for that aircraft. When sealing the aircraft after completion, an info note will be entered in the AFTO Form 781A, indicating preflight accomplishment, cargo compartment configuration and any additional information deemed necessary for the oncoming primary Loadmaster(s). Primary aircrew Loadmaster(s) will complete AFTER LOADING GENERAL Checklist and verify cargo documentation is aboard the aircraft.

13.4.1.6. Ramp Coordinator (RAMPCO) Loadmaster Operations: This duty may be utilized by Mission Commanders/mission execution cells for aircraft launch operations when deemed necessary. Duties may include load planning, mission preparation, or maintenance coordination for successful mission execution.

13.4.1.7. Wireless Headset Procedures. Per MAJCOM instruction.

13.4.2. Passenger Missions:

13.4.2.1. Maximize seat availability on all missions.

13.4.2.1.1. Port personnel will calculate the maximum number of seats available based on existing cargo compartment/Aircrew Flight Equipment configuration, aircraft configuration time and ground time available for each mission leg. This information will be calculated no later than 5 hours prior to takeoff time.

13.4.2.1.2. If an actual seat release is different than what the load plan or port personnel indicate, aircrews will provide the port representative a reason for the disparity. Annotate information in Mission Remarks of appropriate database(s).

13.4.2.1.3. The PIC or loadmasters will inform port personnel of any maintenance, crew complement, or operational mission requirements that will negatively affect number of seats available when port representatives conduct the cargo/passenger upload briefing. Late takeoffs due to configuration changes will be reported as Passenger Service/ reconfiguration for the reason on aircrew documentation.

13.4.2.2. Manifesting. Passenger service or airfield management personnel manifest passengers at locations with an AMC passenger processing activity.

13.4.2.2.1. The PIC and loadmaster are responsible for ensuring all passengers are properly manifested.

13.4.2.3. All passenger briefing(s) contained in Flight Manual(s)/checklist(s) will be accomplished for any mission with passengers aboard regardless of passenger category (i.e. DV, Duty passenger, Space Required passenger, Space available passenger, Mission Essential Passenger, etc.) or manifest documenting method (passenger manifest, flight orders, etc.)."

13.4.2.4. At locations without an AMC passenger processing activity it may be necessary for crews to perform passenger service functions at stations that do not have this capability. These functions include manifesting, anti-hijacking processing, and ensuring visa/passport requirements are met. When the aircrew accomplishes manifesting, anti-hijack processing is completed by the aircrew IAW AFI 13-207. Do not hesitate to contact 618 AOC (TACC)/XOGX, Aerial Port Control Center (APCC); DSN 779-0350/0355, commercial; 618-229-0350/0355, if any questions arise such as who may travel to specific locations or pass-port/visa requirements. Aircraft operating within other MAJCOMs which have operational C2 over that aircraft will contact the appropriate AMOCC for specific details. File a copy of the DD Form 2131, *Cargo/Passenger Manifest*, with the flight plan. If not filed with the flight plan, annotate the location of the manifest on the flight plan IAW AFI 11-202V3.

13.4.2.5. Ensure the APU/GTC is shut down prior to boarding passengers unless adequate ear protection is provided. A passenger service representative or crewmember will assist passengers at the bottom of the steps/stairs, and the loadmaster will assist in seating passengers. DVs, passengers requiring assistance, and families should be boarded first to minimize separation. Make every effort to seat families together. Ensure that only adult, English speaking, physically capable, and willing passengers are seated next

to emergency exits. Do not seat mothers with infants, or children under 15 years old, in seats adjacent to emergency exits.

13.4.2.6. When children under the age of two are accepted as passengers, their sponsor has the option to either hold the child or place him/her in a Department of Transportation approved Infant Car Seat (ICS). Although the use of ICS for children processed through AMC owned or controlled terminals (including gateways) is no longer mandatory, all passengers (duty and space-A), regardless of age, are required to be assigned their own seat. This policy will provide an infant and their sponsor with a dedicated seat allowing the use of an ICS at the sponsor's discretion; this mirrors current FAA (commercial) standards. The FAA has banned the use of booster seats, harnesses, and vest child restraints.

13.4.2.6.1. Passengers may hand-carry their ICS. If used, secure the ICS to the seat using the seat belt. Adults will not hold the ICS during any phase of flight. In the event of turbulence or emergency landing, it is highly recommended for infants to be secured in an ICS. To prevent blocking an exit route, the ICS should not be used in an emergency exit/aisle (for missions equipped with airline style seat pallets) seat. If the aircraft is configured with side-facing seats, aircrew must ensure the ICS is adequately secured. The design of the sidewall seatbelt makes it difficult to remove enough slack to secure the ICS. Crewmembers may need to reroute the seatbelt by crossing the belt, between the sidewall and the seatback webbing, routing the belt back through the webbing and through the securing point on the ICS. When removing slack from the seatbelt ensure the buckle remains on one side or the other so that it can be easily accessed for release. The PIC is the final authority for determining whether the ICS is adequately secured.

13.4.2.7. Decisions regarding eligibility or acceptance of a passenger with disabilities for flight need to be determined at the lowest level possible. Problems concerning eligibility or acceptance that cannot be resolved locally must be reported (circumstances, chronology, names, units, etc.) to HQ AMC/A4T. For time sensitive problems, telephone HQ AMC/A4TP DSN 779-4592 or 618 AOC (TACC)/APCC.

13.4.2.8. Download the baggage of no-show passengers and those removed from a flight. In the case of SAAM or exercise missions at non-AMC locations, coordinate with CRG or deploying unit CC to decide if downloading of baggage is necessary.

13.4.2.9. RUSH baggage movement will be accomplished IAW AMCI 24-101V14, *Military Airlift Passenger Service*. The loadmaster will ensure ATOC provides a copy of the AMC Form 70, *RUSH Baggage Manifest*, for the shipment of RUSH baggage.

13.4.2.10. Ensure all food items are removed from the aircraft by fleet service and returned to the flight kitchen if an extended delay occurs. Ensure that a copy of AF Form 3516, *Food Service Inventory Transfer Receipt*, is received from fleet service to relieve the loadmaster of meal accountability.

13.4.2.11. Pillow and Blanket Distribution. Hand out pillows and blankets only when requested by passengers. At enroute locations, leave used pillows and blankets on seats for thru-load passengers. Do not mix used and unused pillows and blankets.

13.5. Passenger Handling.

13.5.1. The loadmaster is a key figure in good passenger relations. The following rules should be observed:

13.5.1.1. Address passengers by proper titles.

13.5.1.2. Avoid arguments and controversial subjects, national or international politics, criticism of other personnel or organizations.

13.5.1.3. Offer services or perform duties in a manner indicating a personal interest and willingness to help.

13.5.2. Comments by the loadmaster and the manner in which they are made often determine passenger attitudes about the flight. Always remember that passengers are individuals; address them collectively only when making announcements.

13.5.2.1. Ensure crewmember's and MEP's entertainment media (magazines, DVD, etc.) are of an appropriate nature.

13.5.3. In-flight Procedures.

13.5.3.1. Passengers may move about the cabin after reaching cruise altitude; however, judgment must be exercised on the number of passengers allowed out of their seats at any one time. Encourage passengers to remain seated with their seat belts fastened. Due to concern for their safety, passengers are not allowed to lounge or sleep on cargo or baggage. Discourage passengers from congregating around galley and lavatory.

13.5.3.2. Make frequent checks on cabin temperature, passengers with small children, and cleanliness of the cabin and lavatories.

13.5.3.3. Do not allow passengers to tamper with cargo or emergency equipment. Passengers will not be permitted access to checked baggage.

13.5.3.4. On long flights, particularly during hours of darkness, use all possible means to make passengers comfortable. Dim and extinguish unnecessary cargo compartment lights.

13.5.3.5. Passengers may visit the flight deck only when approved by the PIC. Use good judgment when requesting this authority. Refer to **paragraph 5.3** for further guidance.

13.5.4. Body Fluid/Bio-Hazard Clean-Up:

13.5.4.1. Aircrew personnel are the first line of defense when human fluids/waste contaminate aircraft. Because of the potential health risk to passengers and crew, crewmembers will immediately clean-up, to the best of their ability, all body fluids/waste when it does not detract from their primary duties. Loadmasters will request troop commanders, team leaders, or traveling companions assist with the in-flight clean-up whenever possible. The clean-up will be accomplished using kits provided by fleet service and the procedures listed below.

13.5.4.1.1. Cordon of the contaminated area if possible.

13.5.4.1.2. Use non-sterile vinyl or nitrile gloves that cover part of the arm.

13.5.4.1.3. Wear safety goggles or glasses and an N-95 disposable respirator or equivalent surgical mask to protect the mucous membranes and inhalation of blood-borne pathogens that may exist.

13.5.4.1.4. Wear disposable coveralls and footwear covers to protect skin, clothing and footwear if available.

13.5.4.1.5. Apply paper towels or other absorbent material to the fluid to absorb the fluids and minimize the spill area.

13.5.4.1.6. Use fluid from clean-up kit.

13.5.4.1.7. Place all material into bag.

13.5.4.1.8. Avoid touching the mouth or face area with soiled hands or gloves. Wash hands thoroughly with soap and water after cleaning or clean hands with a alcohol-based hand gel (at least 60% alcohol) when soap and water is not available.

13.5.4.1.9. Annotate type of body fluid/bio-hazard cleaned-up and location in AFTO Form 781A, *Aircraft Maintenance Discrepancy and Work Document*.

13.5.4.1.10. When it is not possible for aircrew personnel or passengers to clean-up during flight, fleet service (or maintenance personnel at locations without Fleet Service) will be notified prior to landing.

13.5.4.1.11. When deploying to a COCOM or location without Fleet service capability, coordinate with local Fleet Service to build and deliver kits. Number of kits will be determined by tasked unit personnel.

13.5.5. Meal Service.

13.5.5.1. Ensure each passenger receives the meal ordered by verifying the passenger's AMC Form 148, *AMC Boarding Pass/Ticket*.

13.5.5.2. Box Meals. After takeoff, distribute box meals to passengers who boarded at the previous station. This lessens confusion when flight segments are short and more passengers board at subsequent stations. Frozen/Cooked meals will not be accepted for passengers. Box meals should be served in the following sequence:

13.5.5.2.1. Small children requiring assistance.

13.5.5.2.2. Distinguished Visitors.

13.5.5.2.3. All other passengers.

13.5.5.3. Do not serve liquids or hot foods during turbulence.

13.5.5.4. When purchased meals are not furnished to passenger(s), the loadmaster will annotate the individual's AMC Form 148, *AMC Boarding Pass/Ticket* to reflect reimbursement is authorized. Inform the passenger(s) they may receive refunds at the passenger service counter at the next station, originating location, or destination terminal.

13.5.5.5. Complimentary snacks and beverages are authorized on TWCF funded missions (including AFRC flown missions) for passenger consumption only. Complimentary snacks are not authorized on JA/ATT, Joint Chief of Staff (JCS) exercises, or SAAM missions. The squadron or port operations officer will ensure snacks

and beverages are placed on board when departing AMC stations. When departing from other stations and no snacks or beverages are placed onboard, the loadmaster may obtain required snacks and beverages from the local in-flight kitchen.

13.6. Enroute and Post-Flight Duties.

13.6.1. At stations where a crew change is made and loading or offloading is required, the inbound loadmaster is responsible for offloading the aircraft. The outbound loadmaster is responsible for planning and loading the outbound load.

13.6.2. At crew stage points, brief relief personnel about passenger and aircraft equipment, any missing items, the location of through cargo, mail and baggage, and any information pertinent to through passengers. Point out cargo requiring special consideration (hazardous material, perishables, etc.). If unable to conduct a face to face briefing, leave written instructions with the cargo manifest or local C2.

13.6.3. Assist passengers in deplaning. If BLUE BARK, DVs, COIN ASSIST, or couriers are onboard, the loadmaster informs the traffic or protocol representative respectively.

13.7. Loaded Weapons. Weapons are considered loaded if a magazine or clip is installed in the weapon. This applies even though the clip or magazine is empty.

13.7.1. Personnel who will engage an enemy force immediately on arrival (actual combat) may carry basic combat loads on their person. Weapons will remain clear with magazines or clips removed until immediately prior to exiting the aircraft. The troop commander will coordinate with the loadmaster prior to directing personnel to load any weapons. This applies to airborne assaults and airland missions.

13.7.2. Personnel who will not immediately engage an enemy force will store basic ammunition loads in a centralized palletized location for redistribution on arrival at the objective. Magazines or clips will not be inserted into weapons.

13.8. Weight and Balance. Accomplish weight and balance for this aircraft according to T.O.1-1B-50, *Weight and Balance*, and AFI 11-2C-130V3 Addenda A. The unit possessing the aircraft maintains the primary weight and balance handbook containing the current aircraft status and provides a supplemental weight and balance handbook for each aircraft. The supplemental handbook should be enclosed in a wear-resistant binder (preferably metal), stenciled "Weight and Balance" with the airplane model and complete serial number on the cover or a spine.

13.8.1. The supplemental handbook will include TO 1C-130E-5, *Basic Weight Check Lists and Loading Data*, AFI 11-2C-130V3 Addenda A, sufficient copies of DD Form 365-4, *Weight and Balance Clearance Form F—Transport/Tactical*, and a certified copy of the current DD Form 365-3, *Chart C, Basic Weight and Balance Record*. Chart C will include the aircraft's basic weight, basic moment, and center of gravity. HQ AMC/A3V approved electronic weight and balance programs may be used for any mission.

13.8.2. The loadmaster will file the original DD Form 365-4, *Weight and Balance Clearance Form F—Transport/Tactical*, at the departure airfield and maintain a physical or electronic copy for the duration of the flight.

13.8.3. The weight and balance section of the unit possessing the aircraft will provide the information required to maintain current and accurate documents to the appropriate agency.

13.9. Cargo Validation On/Offloading Procedures and Format. Use the following format when tasked to validate a new loading procedure or when encountering any cargo you feel requires special or specific on/offloading or tiedown procedures not currently listed in TO 1C-130A-9. After completion, send through standardization channels to HQ AMC/A3VX.

13.9.1. General Loading Data:

13.9.1.1. Nomenclature of item. Give military or civilian name, national stock number (NSN), and a brief description of the item; i.e., dump truck, medical van, etc.

13.9.1.2. Dimensions (in inches). Length, width, and height. Rough drawing or picture of the unit pointing out critical dimensions, projections, overhangs, etc.

13.9.1.3. Weight (in pounds). Gross weight; individual axle weight; or data plate weight if possible.

13.9.2. Number of loading crew personnel and loadmasters/~~s~~ required to on/offload cargo and their position to observe clearances, if required.

13.9.3. Equipment and Material Requirements. Special equipment and material required to on/offload cargo; i.e., cargo winch, prime mover, shoring requirements.

13.9.4. Aircraft Configuration Required.

13.9.5. Preparation of Cargo for Loading. Components that must be removed or reconfigured to on/ offload cargo (i.e., helicopter struts, exhaust stacks, cabs, etc.).

13.9.6. On/offloading Procedures.

13.9.7. Location of Tiedown Points.

13.9.8. Comments.

13.10. Emergency Airlift of Personnel. Refer to **Chapter 17**.

13.11. Rucksacks. The following procedures apply to loading of rucksacks. **NOTE:** Refer to AFTTP 3-3.C-130E/H for additional rucksack information.

13.11.1. During administrative (training) deployments, rucksacks may be loaded on deploying vehicles or palletized.

13.11.2. During tactical deployments into a FOB/OB, rucksacks not loaded on vehicles will be carried by the individuals onto the aircraft. Allocate pallet space on the load plan for loading rucksacks.

13.12. Additional Cargo Considerations.

13.12.1. Lithium Batteries and Pyrotechnic Material (Class/Division 1.3G). Aircraft halon fire extinguishers are ineffective in fighting fires involving primary (non-rechargeable) lithium batteries and pyrotechnic material. Primary lithium batteries shipped as cargo or installed/contained in equipment and pyrotechnic material will not be accepted as cargo without the shipper providing a suitable fire extinguisher(s). For non-rechargeable lithium batteries this may be C02, Class D, or a specialized fire extinguisher (e.g., LITH-X). Dry chemical agent is preferred extinguisher for pyrotechnic material. These extinguishers will only help reduce the intensity of the fire until the lithium and pyrotechnic material expends itself. Aircraft halon fire extinguishers are suitable when transporting only rechargeable

(lithium ion) batteries. Fire extinguisher requirements for non-rechargeable lithium batteries and pyrotechnic material do not apply to items being hand carried by troops during Chapter 3 operations. **NOTE:** Aircraft potable water will not be used as a fire suppression system for lithium batteries or pyrotechnic material. Water presents a hazard to electronic equipment located in the center accessory compartment and ARO compartment and water, in less than a large quantity, is ineffective.

13.12.2. ISU-90 Containers. If the person responsible for the container is not on board, the key or combination for locks on containers must be on the container adjacent to the lock. AMC inspectors and aircrew are authorized access on all cargo containers placed on AMC aircraft except when waived by HQ AMC/A3 for security reasons. Load plans must allow in-flight access in event of an emergency, or hazardous materials will be removed from the container. Some containers have built-in "HAZMAT" access panels; however, when these containers are utilized, any hazardous materials must be positioned to permit access through the panel. **EXCEPTION:** See AFMAN 24-204/TM 38-250/NAVSUP PUB 505/MCO P4030.19I/DLAI 4145.3 for hazardous cargo not required to be accessible in-flight. Hazardous materials in the upper compartment of the container are inaccessible unless the adjacent pallet position is left empty to facilitate opening the doors.

13.12.3. Commercial Cargo Straps. Do not use commercial cargo straps. The only authorized cargo straps are the CGU/1B, 5K air cargo strap, NSN 1670-00-725-1437, strap, webbing universal tiedown, NSN 5340-00-980-9277 (Army version of the AF CGU/1B, 5K air cargo strap) and the 10,000-pound restraint assembly, cargo, NSN 1670-00-406-2657.

13.12.4. Ratchet device stamped: PECK & HALE, LLC, CGU-1/B 5000 LBS CAP. 94658 6MRW/ 1465B with white unmarked strap will not be used. Remove any deficient devices found on the cargo/aircraft and turn them in to aerial port/maintenance personnel for final disposition.

13.12.5. Defective/prohibited tie-down equipment. Remove and write-up in AFTO Form 781 any tie-down equipment identified as unserviceable. Quarantine any tie-down equipment involved with an abnormal occurrence (releases, loosens, or breakage). Retain and turn in to Safety inspection team, aircraft incident investigator(s) or Stan/Eval for disposition. The aircrew experiencing the incident will fill out an AMC Form 97 and forward IAW **paragraph 8.4**.

Chapter 14

FUEL PLANNING AND CONSERVATION

14.1. General. This chapter is designed to assist pilots, navigators, and planners in fuel planning airland and airdrop missions, with or without low-level segments. A fuel plan is required for all flights except local area training flights with established standard fuel loads. The CFPS Computer Flight Plan (CFP) and TO 1C-130xx-1-1 are the primary preflight references. Missions should be planned at altitudes, routes, and airspeeds to minimize fuel usage.

14.2. Fuel Conservation. Air Force policy is to conserve aviation fuel when it does not adversely affect training, flight safety, or operational readiness. Aircrew and mission planners will manage aviation fuel as a limited commodity and precious resource. Fuel optimization will be considered throughout all phases of mission planning and execution. Comply with the following whenever consistent with tech order guidance and safety:

14.2.1. Fuel Loads. Excessive ramp and recovery fuel adds to aircraft gross weight and increases fuel consumption. Do not ferry extra fuel beyond optimum requirements for safe mission accomplishment and training objectives.

14.2.2. Flight Planning. Aircrew and mission planners will optimize flight plans and flight routing for fuel efficiency; use optimized CFPs when possible.

14.2.3. APU/GTC Usage. Minimize the APU/GTC usage to the maximum extent possible. Early coordination may be required to ensure external power carts and heating/cooling units are available.

14.2.4. Center-of-Gravity (CG). Load and maintain aircraft at an aft CG whenever possible consistent with mission requirements and Flight Manual restrictions.

14.2.5. Engine Start. Delay engine start on all departures whenever practical to minimize fuel consumption.

14.2.6. Taxi. Consider engine out taxi when permitted by Flight Manual.

14.2.7. Departure Planning. Consider use of opposite direction runway to reduce taxi and/or expedite departure routing if winds allow.

14.2.8. Takeoff. Consider a rolling takeoff as well as reduced power when able. This saves fuel and engine wear. Clean up on schedule and don’t delay gear and flap retraction.

14.2.9. Climb/Descent. In-flight procedures such as climb/descent profiles and power settings should also be considered for efficient fuel usage.

14.2.10. Weather Deviations. Attempt to coordinate for off-course deviation early so gross maneuvering is not required.

14.2.11. Cruise techniques. Attempt to trim the aircraft and match throttle settings whenever possible. Fly fuel efficient speeds and altitudes to the maximum extent possible.

14.2.12. Approach. Fly most direct routing to arrival approach consistent with mission requirements.

14.2.13. Holding. If holding is required, hold clean at the most fuel efficient altitude and request a large holding pattern. Hold at endurance or performance manual recommended holding speeds, conditions permitting.

14.2.14. Parking. Consider using shortest taxi route and avoid double blocking when able.

14.3. Fuel Planning Procedures. Aircrew should employ the following aviation fuel optimization measures without compromising flight safety or jeopardizing mission/training accomplishment.

14.3.1. Reserve and Contingency Fuels.

14.3.1.1. Plan a 45-minute fuel reserve at destination or alternate (when an alternate is required).

14.3.1.2. Contingency. Fuel identified for unforeseen circumstances during any phase of flight (i.e. unforecasted weather, launch delay, etc). For all missions, other than local training missions, calculate 15 minutes of contingency fuel using destination gross weights. Local training missions are not required to carry contingency fuel. If contingency fuel is carried on local training missions, it should not exceed 15 minutes. Contingency fuel is not considered reserve fuel since it can be consumed at any point during the mission. Contingency fuel will be included in the initial RRFL calculation.

14.3.1.3. Reserve and contingency fuel will be computed using consumption rates providing maximum endurance at 10,000 feet MSL using the end of cruise gross weight (ECGW). If an alternate is required, compute using weight at alternate destination.

14.3.1.3.1. For remote destinations, compute reserve and contingency fuel using consumption rates providing maximum endurance at 20,000 feet MSL using ECGW.

14.3.1.4. ACFP will calculate reserves and contingency fuel in the holding fuel block. Computer flight plans will have 1+00 holding when combining 0+45 reserve and 0+15 contingency fuel.

14.3.1.4.1. For remote destinations, ACFP will plan 2+15 holding, combining 2+00 reserve and 15 minutes contingency fuel.

14.3.2. Plan fuel to an alternate only when AFI 11-202V3 or this publication require the filing of an alternate.

14.3.2.1. When only one alternate is required, use the closest suitable airfield meeting mission requirements (such as special requirements for hazmat or patients) and AFI 11-202V3 weather criteria.

14.3.2.2. If two alternates are required, use the two closest suitable airfields meeting AFI 11-202V3 weather criteria and fuel plan to the more distant of the two.

14.3.2.3. When selecting an alternate, suitable military airfields are preferred if within 75 nautical miles of destination. The ACFP default distance to an alternate is 75 nautical miles. Consequently, where the alternate is less than 75 nautical miles from the primary destination, ACFP will assume that the airfield is 75 nautical miles away.

14.3.2.4. The practice of selecting an alternate in another weather system or selecting an alternate based on maintenance capability will not be used.

14.3.2.5. ACFP will provide a route of flight to the primary alternate if greater than 75 miles from the destination.

14.3.2.6. For remote destinations, holding is authorized in lieu of an alternate airport. A remote destination is defined as any aerodrome which, due to its unique geographic location, offers no suitable alternate (civil or military) within 2 hours flying time. In such situations, use 2+00 hrs reserve fuel (1+15 holding in lieu of an alternate and 0+45 reserve).

14.3.2.7. When filing an alternate located in Alaska or at latitudes greater than 59 degrees (North or South) do not add additional holding fuel.

14.3.2.8. Units may develop standard alternate fuel requirements for local training missions however; these fuel requirements will not be less than those specified in this AFI. Local supplements will not dictate a standard "IAF" or "Top of Descent Fuel".

14.3.3. Using all available planning tools (including ACFP) and guidance in this chapter, the PIC and navigator will determine the Required Ramp Fuel Load (RRFL). When actual fuel load exceeds the RRFL by more than 2,200 lbs, defuel the aircraft to the RRFL.

14.3.4. Tankering fuel for convenience is prohibited. MAJCOM C2 or 618 AOC (TACC) sanctioned tankered fuel is deemed operationally necessary, and will be included in the RRFL.

14.3.5. When there is a conflict between an on-time departure and defueling, the 618 AOC (TACC) deputy director of operations (DDO) or MAJCOM C2 equivalent will determine which takes precedence. The OG/CC (or designated representative) will make this determination when serving as execution authority for the mission.

14.3.6. For those missions that are flight managed by the 618 AOC (TACC) or 613 AOC/AMD, when an aircraft commander believes the fuel load is insufficient to execute the mission:

14.3.6.1. They will call the appropriate FM to identify and resolve differences.

14.3.6.2. If the aircraft commander and FM do not reach agreement, the aircraft commander is the final authority on the safe conduct of the mission.

14.4. Fuel Requirements. This section augments AFI 11-202V3 fuel requirements. **See Table 14.1**. Additional considerations:

14.4.1. Wing Relieving Fuel (WRF). WRF is additional fuel kept in the main tanks intended to counter wing bending moments. These wing bending moments are most pronounced with heavy cargo loads and lighter fuel weights. WRF is an element of primary fuel management essential for the long term structural integrity of the C-130. WRF is considered unusable fuel until the cargo is off-loaded (except in an emergency). In practical terms, it is the minimum *landing* fuel for a particular load in a specific aircraft. It is calculated using the appropriate TO 1C-130xx-1 Weight Limitations Chart to remain in Areas A-C from takeoff to landing. Currently, the cost of replacing wing boxes is greater than the cost of tankering additional fuel. All missions should takeoff in primary fuel management with the following exceptions:

14.4.1. **(911AW)** Local and JA/ATT missions scheduled for low-level operations will initially takeoff with main tanks full. Every effort should be made for all other training

missions to initially takeoff with main tanks full. Exception: max effort trainers may initially takeoff with main tanks fueled to permit immediate max effort operations. For off-station departures, schedulers will, to the extent reasonably possible, consider sortie duration, weather, divert options, etc. The Aircraft Commander should be active in the mission planning the day prior to departure and should coordinate with Scheduling/Current Operations to confirm/revise the fuel load. For AMC directed missions, Aircraft Commanders are expected to work closely with their flight managers to resolve discrepancies in required fuel loads. Under no circumstance will this policy preclude re-fueling/de-fueling if, in the judgment of the Aircraft Commander, safety becomes a concern.

14.4.1.1. All mission profiles that include flying low-level will initially takeoff with main tanks full and maintain primary fuel management to reduce the effects of wing upbending and increase the center wingbox service life. The following exceptions apply to taking off with less than full main tanks:

14.4.1.1.1. Secondary fuel management with fuel in the AUX tanks for heavy-weight assault training.

14.4.1.1.2. Secondary fuel management with fuel in the AUX tanks for 'elevator lifts' out of an assault LZ.

14.4.1.1.3. A mission necessity based on a real-world operation.

14.4.2. Depressurization Fuel. Additional fuel required for pressure loss when carrying passengers and oxygen is not available or sufficient oxygen is not available for the crew to fly unpressurized at the planned altitude.

14.4.2.1. Crews are to calculate the fuel required to reach a recovery airfield in the event of depressurization at the ETP. Additional fuel for pressure loss at ETP is used when pressurized, carrying passengers, and aircraft oxygen is not available to the passengers. Compute at 1,000 lbs/hr for time from ETP to a suitable airfield. Plan to be overhead at the recovery location with 0+30 minutes reserve fuel.

14.4.2.2. Prior to flight, crews must compare the calculated depressurization fuel with the RRFL to determine if additional fuel is required. See **Table 14.1**.

14.4.2.3. Depressurization fuel will be calculated in ACFP at 10,000’ altitude. If additional fuel is required from the ETP, then ACFP automatically adds the additional fuel into block 10.

14.5. Fuel Planning. Navigators are allowed to fuel plan by either using the appropriate TO 1C-130xx-1-1 method or electronically by using CFPS. In addition, ACFP fuel plans provided by 618 AOC (TACC) are authorized for determining required fuel loads.

14.5.1. **TO 1C-130xx-1-1 Fuel Planning.**

14.5.1.1. There are three distinct phases of flight for which required fuel quantities and or fuel flows must be calculated. These three phases are: initial climb out, start cruise and end cruise.

14.5.1.2. When computing fuel using TO 1C-130xx-1-1, use the appropriate drag index. Standardized drag indexes may be established by local OGVs and published in local

supplements. Use 95 percent engine charts and Section II of the AF Forms 4116 for computations.

14.5.1.2. **(911AW)** Drag Index: Standard for 911 AW 78- series aircraft is +16, with the exception of aircraft 78-80806 with a drag index of +17.

14.5.1.3. Use the appropriate TO 1C-130xx-1-1 Part 4 Figures to extract Time to Climb (TTC), Distance to Climb (DTC), and Fuel to Climb (FTC). Apply the correct temperature deviation and correct for pressure altitude to compute all climb data.

14.5.1.4. Using TTC and DTC, calculate climb TAS.

14.5.1.5. Climb Fuel. In the climb section of the enroute fuel computation worksheet enter takeoff gross weight (TOGW), total flight time, and FTC in the appropriate blocks.

14.5.1.6. Start Cruise.

14.5.1.6.1. Subtract climb fuel from the TOGW to obtain the start cruise gross weight.

14.5.1.6.2. Subtract TTC from the total time to obtain cruise time.

14.5.1.6.3. Enter the appropriate TO 1C-130xx-1-1 Part 5 figure to extract fuel flow. Entering arguments are start cruise gross weight, pressure altitude and temperature deviation. Fuel flow extracted is per engine. Multiply the extracted fuel flow by four to arrive at fuel flow total.

14.5.1.6.4. Divide the fuel flow total by 60 and multiply by the cruise time to obtain start cruise fuel.

14.5.1.7. End Cruise.

14.5.1.7.1. Subtract start cruise fuel from the start cruise gross weight to obtain end cruise gross weight.

14.5.1.7.2. Enter the appropriate TO 1C-130xx-1-1 Part 5 figure to extract fuel flow. Entering arguments are end cruise gross weight, pressure altitude and temperature deviation. Fuel flow extracted is per engine. Multiply the extracted fuel flow by four to arrive at fuel flow total. This is also the terminal fuel flow (TFF).

14.5.1.8. Average Cruise Fuel Flow.

14.5.1.8.1. Average the start cruise and end cruise fuel flow to obtain the average cruise fuel flow.

14.5.1.8.2. Divide the fuel flow total by 60 and multiply by the cruise time to obtain cruise zone fuel total.

14.5.1.9. Total enroute fuel. Add the FTC to the cruise zone fuel total to determine total enroute fuel.

14.5.1.10. Compute preflight endurance using the Average Cruise Fuel Flow. When computing preflight endurance, always subtract 1,300 pounds from actual ramp fuel to account for start, taxi and takeoff.

14.5.1.11. For an explanation of how to compute maximum endurance fuel flow (MEFF) using the applicable TO 1C-130xx-1-1 reference the “Maximum Endurance Fuel Flow

How To Guide" at **https://private.amc.af.mil/a3/a3v/publications.aspx** under "C-130 Publications"

14.5.2. **CFPS Fuel Planning**

14.5.2.1. For instructions on how to fuel plan using CFPS reference the "CFPS Planning Guide" at **https://private.amc.af.mil/a3/a3v/publications.aspx** under "C-130 Publications." Also, a modified electronic version of the AF Form 4116 (CFPS 4116) can be downloaded from the same website for use with CFPS fuel planning.

14.5.3. **ACFP Fuel Planning.** ACFP flight/fuel plans are available to aircrew flying 618 AOC (TACC) flight managed missions.

14.5.4. **Multi-Leg Fuel Planning.** See **Figures 14.1** and **14.2**.

14.5.4.1. A multi-leg fuel plan becomes necessary when a mission includes multiple stops where fuel is unavailable. Use the following procedure for multi-leg fuel planning, assume a three leg mission with legs labeled 1, 2, and 3:

14.5.4.1.1. Begin with the last leg (3) and fuel plan as normal to obtain required ramp fuel.

14.5.4.1.2. Next, determine the fuel required for leg 2. Include the required ramp fuel from leg 3 as identified extra fuel for leg 2. Do not plan for contingency, reserve or alternate/missed approach fuel for leg 2 unless those totals exceed the required ramp fuel for leg 3. If this occurs, add the difference in the identified extra block for leg 2. Use 1,000 lbs. for approach and landing.

14.5.4.1.3. Plan leg 1 using the same procedures you used for leg 2.

14.5.4.2. Fuel requirements must be verified at each stopover airfield. Requirement must be recomputed whenever the planned burnoff changes; for example, enroute altitude changes, actual cargo/passenger load differs from the estimate, holding is accomplished, diversion to alternate is required, etc.

14.5.4.3. Regardless of the number of mission segments involved, fuel planning is always accomplished by planning the last leg's requirements first. The remaining leg requirements are planned in the reverse order to be flown until the refueling airfield is reached.

Table 14.1. Fuel Load Components.

1. ENROUTE	Fuel for flight time from departure to overhead destination or initial penetration fix at cruise altitude (including time for planned orbit, escort, search, recovery, appropriate climb, weather recon, etc. when applicable).
2. RESERVE	45 minutes (2+00 hrs for remote destinations). Reserve fuel will be computed using consumption rates providing maximum endurance fuel flow at 10,000 MSL (20,000 MSL for remote destinations). For gross weight, use end cruise gross weight (ECGW) from section II of the AF Form 4116. If an alternate is required, compute using weight at alternate destination.
3. CONTINGENCY	15 minutes. Use same fuel flow as reserve fuel above. (Not required for local training missions)
4. ALTERNATE AND MISSED	**Alternate**: Fuel for flight time from overhead destination or initial penetration fix to alternate, or most distant alternate when two are required.

APPROACH		Compute at terminal fuel flow. Required whenever alternate must be filed. **Missed Approach**: 2,200 lbs. Required if destination is below ceiling minimums but above visibility minimums for planned destination approach.
5. APPROACH/LANDING		**Approach:** 1,000 lbs (2,000 lbs for high altitude approach). Entry always required. **Minimum Landing Fuel**: 4,000 lbs. Entry always required. This accounts for gauge error. Do not include this 4,000lbs of fuel in the reserve and contingency fuel calculations.
6. IDENTIFIED EXTRA	STORED FUEL	Ramp fuel for succeeding legs without refueling.
	THUNDERSTORM AVOIDANCE	1,500 lbs if forecast thunderstorms are scattered or numerous along the route of flight. Will be based on the DD Form 175-1 or equivalent.
	ICING	1,000 lbs if route of flight has forecast or known icing conditions. Will be based on the DD Form 175-1 or equivalent.
	KNOWN HOLDING DELAYS	Fuel for anticipated/planned excess holding time. Compute at terminal fuel flow.
	WING RELIEVING FUEL (WRF)	Dependent on cargo weight and basic aircraft operating weight. Normally negligible below cargo weights of 35,000 lbs. Calculate required WRF using the Weight Limitations Charts in appropriate TO 1C-130xx-1. Minimum landing fuel of 4,000 lbs is included as part of the WRF total.
6A. DEPRESSURIZATION FUEL		Additional fuel for pressure loss at ETP - used when pressurized, carrying passengers, and aircraft oxygen is not available to the passengers. Compute at 1,000 lbs/hr for time from ETP to a suitable airfield. Add 30min of reserve fuel. If computed fuel required for depressurization is less than or equal the total of blocks 2 and 4 no additional entry required in block 6A. If computed fuel exceeds the sum of blocks 2 and 4, add the difference in block 6A.
7. TAXI AND TAKEOFF		1,300 lbs. Entry always required.
11. UNIDENTIFIED EXTRA		Difference between required ramp and actual ramp fuel. When actual fuel load exceeds the RRFL by more than 2,200lbs, defuel the aircraft to the RRFL. See exceptions in **paragraph 14.1.6.1. and 14.1.6.2.**
12. MINIMUM DIVERSION		Total of ALTERNATE/MISSED APPROACH, RESERVE, WRF and APPROACH/LANDING.

Chapter 15

AIR REFUELING

15.1. .This chapter does not apply to AMC C-130E/H aircraft and is intentionally left blank.

Chapter 16

MISSION PLANNING

16.1. General. This chapter provides combat mission planning guidance for general C-130 tactical operations (Airdrop planning guidance is contained in **Chapter 19**). It provides parameters used to employ the techniques and procedures of AFTTP 3-3.C-130E/H. Mission planning is normally conducted the day before the mission. The OG/CC or Sq/CC may elect to use a "same day mission plan" option. The aircraft commander is ultimately responsible for the accuracy of the mission materials. Unit mission planning facilities should possess essential mission planning material.

16.1.1. In addition to this chapter, AFTTP 3-3.C-130E/H, Chapter 2, must be referenced to establish a sound understanding of the intricate combat mission planning process.

16.1.2. Mission Commander. **Chapter 2** of this instruction specifies mission commander requirements and qualification criteria.

16.1.3. Mission Timelines. Units will supplement this instruction with guidance for local and off-station timelines to include crewmember pre-mission showtimes. These timelines should allow for adequate pre-mission planning, especially while conducting missions away from home station.

16.1.3.1. **(Added-911AW)** Crewmembers will normally report to squadron 2 hours prior to scheduled takeoff time for single-ship missions to include off-station sorties. If an engine running crew change is scheduled, show time may be reduced to 1.5 hours prior.

16.1.3.2. **(Added-911AW)** Crewmembers will normally report to squadron 2.5 hours prior to scheduled takeoff time for formation missions to include off station sorties. ***EXCEPTION***: Loadmasters will report 3.5 hours prior when actual heavy equipment or CDS bundles are to be loaded on the aircraft. NOTE: Mission Commanders are ultimately responsible for setting the mission timeline on formation flights.

16.2. Mission Planning. Planners will thoroughly study enroute threats, terrain, ingress and egress routes, target areas, operations and communications security (OPSEC and COMSEC), political and cultural characteristics, climatology, and any other factors that enhance mission success. Intelligence and meteorology and/or climatology requirements will be identified early because this information may not be readily available. Mission support requests will also be processed as soon as possible to allow coordination and planning. The level of coordination is dependent on available time and means of communication. Aircrews will be ready to operate in the joint arena with little or no face-to-face coordination.

16.2.1. Minimum Altitude Capable (MAC). MAC is the lowest altitude an aircrew can descend to when they detect or suspect a threat. It is dependent on individual aircrew capabilities, experience level, fatigue factors, terrain clearance, etc. Since maneuvering and navigation capabilities are virtually negated at MAC, descending to this altitude is only warranted as a defensive response to an engaged threat and only for the duration of immediate threat activity.

16.2.2. NVG Mission Planning. One full day of planning should be allocated to missions that will operate in the NVG low-level environment. This planning may be accomplished by the pilot, navigator, or appropriate representative designated by the mission commander for formation flights. **CAUTION:** Some red obstruction lighting systems are visible to the naked eye but not visible though NVGs. These lighting systems employ LEDs instead of traditional incandescent sources. The use of LEDs is becoming more common for almost all lighting applications because of their energy efficiency and extremely long life. Aviation red light ranges from about 610 to 700 nanometers, and NVGs (having a Class B minus blue filter) are only sensitive to energy ranging from 665 to about 930 nanometers. Because LEDs have a relatively narrow emission band and do not emit infrared energy like incandescent lights, it is possible for them to meet FAA requirements for aviation red but be below the range in which NVGs are sensitive. LED lighting systems falling outside the combined visible and near-infrared spectrum of an NVG (approximately 665 to 930 nanometers) will not be visible through their goggles. Crews that fly using NVGs are warned to use extra caution when flying near obstacle areas and to report any hazardous sites to their appropriate safety and tactics officers.

16.2.3. Rules of Engagement (ROE). The crew will be familiar with the established ROE. CJCSI 3121.01B, *Standing Rules of Engagement for US Force*s, applies and may be supplemented for the particular mission. Commanders at all levels may request changes to the ROE through the chain of command. Changes to ROE will be rapidly disseminated to all personnel.

16.2.4. Evasion Plan of Action (EPA). Aircrews and/or planners with the assistance of intelligence personnel and Aircrew Flight Equipment/survival specialists will develop an EPA. An evasion plan may be included in the OPORD or SPINS.

16.2.5. For other planning considerations, reference AFTTP 3-3.C-130E/H.

16.3. Planning Restrictions.

16.3.1. Assault Landing Zones (ALZ). OG/CC is the approval authority for the use of semi-prepared ALZs.

16.3.2. Drop Zone (DZ) Restrictions.

16.3.2.1. Locate subsequent Multiple Points of Impact (MPIs) a minimum of 500 yards from the previous Point of Impact (PI). If MPIs are placed laterally, increase the width of the DZ accordingly. Ensure the PI distance from leading edge complies with AFI 13-217, *Drop Zone and Landing Zone Procedures*. Compute minimum size DZ required for the most restrictive aircraft in each element relative to their PI to ensure it fits within the surveyed DZ boundaries. Limit the number of MPIs to three without MAJCOM approval. All aircraft within an element must drop on the same PI. The coordinates for each PI must be provided to the aircrews. Use the most accurate PI altitude available. Thoroughly deconflict and brief all salvo and escape procedures as well as DZ markings prior to mission execution. Only the first PI will be marked. The user accepts responsibility when employing MPI for all injury/damage to personnel/equipment.

16.3.2.2. Use of unmarked DZs requires OG/CC approval for unilateral missions, and MAJCOM/A3/DO approval for all other peacetime training missions. Authorization to use unmarked DZs for contingency airdrops will be contained in SPINs or ATO. ***NOTE:***

Certain combat/contingency situations may prevent marking the DZ. Aircrews may be required to airdrop on unmarked DZs; however, supported units must be made aware that drop accuracy may be reduced. Planners and aircrews must thoroughly develop run-ins with good visual points for timing. Specific airdrop procedures are in **Chapter 19** and AFI 13-217.

16.3.2.3. Ensure coordinate format is DD MM.MM for correct input into SCNS. Using other formats will induce a navigation error with inaccurate PI coordinates.

16.4. Route Planning. The following factors significantly influence route development:

16.4.1. Low Level Altitude Restrictions. The following minimum altitudes are established for C-130 airlift operations. FLIP/ICAO procedures, training considerations, terrain, or operational directives may dictate higher altitudes. ***CAUTION:*** Some charts may depict terrain and obstacle altitudes in meters versus feet (e.g. JOG and TLM charts in some areas of the world).

16.4.1.1. Tactical Corridor. Low-level flights will be planned using tactical corridors. Tactical corridors should be planned as wide as possible, to provide maximum situational awareness and flexibility. The standard width for a tactical corridor is 3 NM. Tactical corridor width can vary from 1 NM minimum either side of centerline, to as wide as desired (10 NM either side is the max recommended). Corridors do not have to be symmetrical, but must be annotated when different from the standard. As a rule of thumb, tactical corridors should be wide over flat terrain and narrow in mountainous terrain.

16.4.1.2. Day VMC Enroute. Fly no lower than 500 feet AGL (or 300 AGL IAW **paragraph 16.4.4.8**) modified contour altitude above the terrain using visual references and radar altimeter.

16.4.1.3. Night VMC Enroute (Non-NVGs). Fly no lower than an indicated altitude of 500 feet above the highest obstruction to flight (man-made obstacle, terrain feature, or spot elevation), or 400-feet plus one chart contour interval above the highest depicted terrain contour, whichever is highest, within the tactical corridor to include the aircraft turn radius over each turn point. If the altitude for the next leg is higher than the current leg altitude, climbs will be completed before the turn point. If the altitude for the next leg is lower than the current leg, do not initiate descent until over the turn point. Legs may be divided into segments for night altitude computations, depending on terrain differential or threats in order to allow flight closer to the ground. Once the obstacle or terrain feature is visually identified and the aircraft is confirmed well clear, the crew may descend to the next segmented altitude, if lower. See **Figure 16.1**.

16.4.1.4. NVG Enroute. Fly no lower than indicated altitude of 500 feet above the highest spot terrain elevation, or 400 feet plus one chart contour interval above the highest depicted terrain contour, whichever is higher, within the tactical corridor. Aircrews must identify factor obstacles within the tactical corridor. If the aircrew does not visually identify the factor obstacles within the tactical corridor, the crew will climb to attain an altitude of 500 feet above the obstacle or avoid the obstacle laterally by 2 NM. If the altitude for the next segment is higher than the current segment altitude, complete the climb prior to the segmentation point. If the altitude for the next segment is lower than the current segment, do not initiate descent until over the segmentation point.

Once the controlling obstacle or terrain feature is visually identified and the aircraft is confirmed well clear, the crew may descend to the next segmented altitude. NVG modified contour will not be flown. ***WARNING:*** If either the pilots' NVGs, SCNS, pressure altimeter, or radar altimeter fail, climb to MSA until resolving the problem. In addition, climb to MSA to resolve any TO 1C-130xx-1 Section III procedures, commensurate with the tactical situation.

16.4.1.4.1. Minimum altitude capable training will not descend below NVG enroute altitude for the leg/segment being flown. **NOTE:** Planning a route on a smaller scale chart, if available, significantly reduces NVG enroute altitudes. If the route has been planned on a smaller scale chart and night altitudes are verified, crews may fly the route at the lower altitudes referencing a TPC.

Figure 16.1. Night VMC Enroute Altitude.

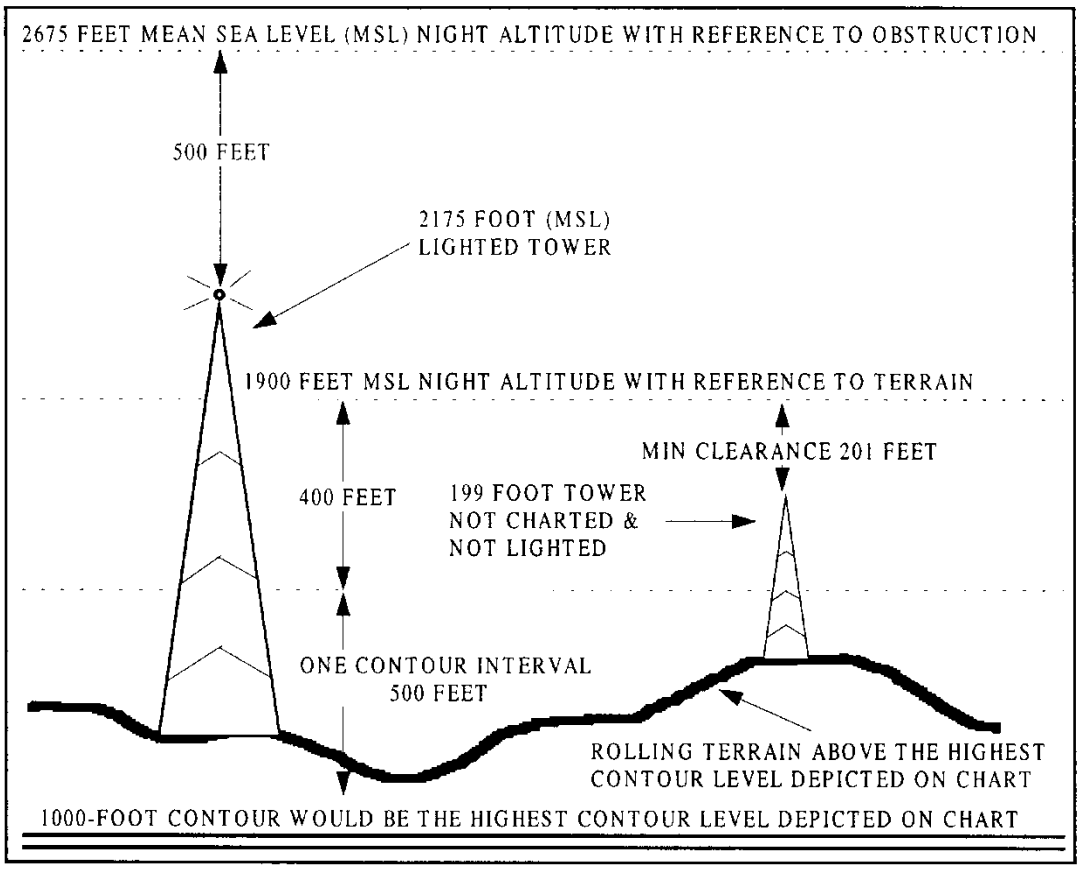

16.4.1.5. Minimum Safe Altitude (MSA). MSA is an initial VFR altitude that provides additional terrain clearance while the aircrew analyzes situations that require interruption of low-level operations (route disorientation and equipment malfunctions or when either pilot must leave the seat during low-level operations, etc). Plan MSA at an indicated altitude of 500 feet above the highest obstruction to flight (man-made obstacle, terrain feature, or spot elevation), or 400 feet plus one chart contour interval above the highest depicted terrain contour, whichever is highest, within 5 NM of route centerline to include the aircraft turn radius. If the tactical corridor is > 5 NM of centerline, the MSA will be

calculated for the tactical corridor width. An MSA will be computed for each leg, route segment, or entire low-level route.

16.4.1.6. Minimum IFR Enroute Altitude. Compute Minimum IFR Enroute Altitude by adding 1000 feet (2,000 feet in mountainous terrain) above the highest obstruction to flight (man-made obstacle, terrain feature, or spot elevation) within 5 NMs of route centerline (10 NMs outside the US unless 5 NM authorized by MAJCOM/DO). Round this altitude up to the next 100-foot increment. If the altitude for the next leg is higher than the current leg altitude, climb will be completed before the turn point. If the altitude for the next leg is lower, do not initiate descent until over the turn point.

16.4.1.6.1. Minimum altitudes for IFR operations within published Military Training Routes (MTRs) in US sovereign airspace will be the computed leg MSA unless a higher altitude is required by DOD FLIP AP/1B, *Area Planning North and South America*.

16.4.1.7. Emergency Safe Altitude (ESA). ESA is designed to provide positive IMC terrain clearance during emergency situations that require leaving the low level structure. Several ESAs may be computed for route segments transiting significant terrain differentials or a single ESA may be computed for the entire low level route. To compute ESA, add 1,000 feet (2,000 feet in mountainous terrain) to the elevation of the highest obstruction to flight within 22 NMs of planned route centerline. An ESA will be computed for the route and conspicuously annotated on the chart. **NOTE:** Climbing to ESA may put the aircraft or formation in a controlled (i.e., IFR) altitude structure requiring coordination with Air Traffic Control agencies. **NOTE:** Pressure altimeters are calibrated to indicate true altitudes under International Standard Atmospheric (ISA) conditions. Any deviation from these standard conditions will result in erroneous readings on the altimeter. This error becomes important when considering obstacle clearances in temperatures lower than standard since the aircraft's altitude is below the figure indicated by the altimeter. Refer to the flight information handbook to determine correction.

16.4.1.8. When routes are flown at temperatures of 0 degrees Celsius or less, apply cold weather temperature corrections to Night VMC Enroute, NVG Enroute, Minimum Safe, and Emergency Safe Altitudes IAW FIH Section D procedures.

16.4.2. Airdrops will not be conducted below the following altitudes: **WARNING:** DZ surveys do not assure terrain and obstruction clearance. Planners and aircrews are responsible for ensuring clearance through mission planning/chart preparation. **NOTE:** In combat or contingency operations the supported unit commander may direct drops below the AFI 11-231, *Computed Air Release Point Procedures*, altitudes.

16.4.2.1. Day VMC Drop Altitude. Fly minimum day VMC airdrop altitudes as specified in AFI 11-231, visually avoiding high terrain and obstacles in the vicinity of the drop zone.

16.4.2.2. Night VMC Drop Altitude. If not on NVGs, fly minimum night VMC run-in altitudes through slowdown, at an indicated altitude of 500-feet above the highest obstruction to flight (man-made obstacle, terrain feature, or spot elevation), or 400-feet plus one contour interval above the highest depicted terrain contour, whichever is higher,

within 3 NM of run-in centerline. If on NVGs, fly NVG enroute altitudes through slowdown. In both instances (with/without NVGs), after slowdown, when the drop zone is in sight and will remain in sight, or when a positive position is identified and adequate terrain clearance is assured, the aircraft may descend from run-in altitude to drop altitude specified in AFI 11-231, AMT, SPINS, or mission planning sheet.

16.4.2.3. IMC Drop Altitude. Fly minimum IMC drop altitudes at 500 feet above the highest obstruction to flight (man-made obstruction, terrain feature, or spot elevation), or 400 feet plus one contour interval above the highest depicted terrain contour, whichever is highest, within 3 nautical miles either side of the run-in centerline from DZ entry point to DZ exit point or as specified in AFI 11-231, whichever is higher.

16.4.2.3.1. DZ Entry Point. Formation descent will not begin until the last aircraft is at or past the DZ entry point.

16.4.2.4. Low Cost Low Altitude (LCLA) Resupply Drop Altitude. LCLA resupply drop altitude is dependent upon the type of parachute being used. However, it will not be lower than 300 feet AGL.

16.4.3. Night VMC Tactical Approach Altitude. Compute IAW AFTTP 3-3.C-130E/H, Chapter 7.

16.4.4. Peacetime Route Restrictions. In addition to restrictions in AFI 11-202V3, specific country or theater of operations publications, and FLIP area planning, routes will not be flown:

16.4.4.1. With less than 1 NM separation (3 NMs when in excess of 250 KIAS) when below 2000 feet AGL from known sensitive environmental areas such as hospitals, fish hatcheries, ostrich and emu farms, large poultry complexes, recreation areas, institutions, and similar locations.

16.4.4.2. With less than 3 NMs separation from prohibited airspace.

16.4.4.3. With less than 3 NMs separation from nuclear power plants.

16.4.4.4. Through restricted airspace, except transition or termination in such areas where the planning unit is a primary using agency or has approval of the controlling agency.

16.4.4.5. In weather conditions less than those specified in this instruction and AFI 11-202V3.

16.4.4.6. Below 1000 feet AGL within a 2000 feet radius over cities or towns shown as magenta shaded areas on 1:500,000 (TPC) scale charts.

16.4.4.7. Over or through active live fire or impact areas that may not be specifically designated as prohibited or restricted areas.

16.4.4.8. Below 500 feet AGL unless:

16.4.4.8.1. Host nation rules specifically allow such VFR operations.

16.4.4.8.2. Routes or training areas have been environmentally assessed and surveyed for 300-foot AGL operations. **NOTE:** This restriction does not apply to

one-time-use routes. Consult FLIP AP/1B for published Military Training Route restrictions.

16.4.4.9. For the airdrop portion of all SKE missions filed under IFR, or for portions of IFR SKE routes flown in uncontrolled airspace, the mission command unit must comply with appropriate FAA exemptions. Provide a NOTAM to the FAA flight service station nearest the affected areas so that it is in-place at least 6 hours in advance of the intended activity, regardless of actual or forecast weather. NOTAM information will include:

16.4.4.9.1. Name of the nearest city or town and state.

16.4.4.9.2. Date and time period of intended activity.

16.4.4.9.3. Number and type of aircraft.

16.4.4.9.4. Altitudes.

16.4.4.9.5. IFR Drop Corridor Ingress and Egress points of the route segment expressed in radial and DME from a VORTAC.

16.4.5. Navigation Chart Preparation. Mission planners will construct a master chart for mission briefings and aircrew reference. Planners should construct the chart using computerized mission planning systems if available. MPD/Copilot and navigator crewmembers will use individual tactical navigation route charts for each mission. Low-level navigation charts will be annotated with any added, deleted, or changed information in the most recent CHUM or supplement. In no case will CHUM coverage be less than 22 NMs either side of the entire planned route of flight. Crews may trim charts to no less than 10 NMs after establishing the ESA. Color copies, if available, of a master chart reduce the probability of missing or misplotted data on aircrew charts.

16.4.5.1. Chart Annotation. Annotate the master chart with the applicable **Chapter 11** and AFTTP 3-3.C-130E/H requirements. Refer to AFTTP 3-3.C-130E/H and AFPAM 11-216 for detailed chart annotation symbology. An individual's chart annotations will have as a minimum: turn points, IP, DZ, course line, course data, CHUM data and date, ESA and chart series/date.

16.4.6. Mission Forms and Logs.

16.4.6.1. AF IMT 4053, *INS Flight Plan and Log*. An AF IMT 4053 should be used when planning tactical low level missions. A MAJCOM approved computer generated flight plan may be used in lieu of the AF IMT 4053.

16.4.6.2. AF IMT 4051, *Low Level Flight Plan and Log*. Pilots will complete and use either an AF IMT 4051 or AF IMT 70 for all low-level airdrop/airland missions. A log or stick diagram containing the same information or an aircrew flimsy page containing this information may be substituted for the AF IMT 4051/AF IMT 70.

16.4.6.3. AF IMT 4062, *C-130 Run-in/Drop Information Card*. Navigators/engineers will use the AF IMT 4062 to annotate pertinent information during all tactical airdrop missions.

16.4.7. Route Study. Crew route study is mandatory before accomplishing flight in the low level environment. Special emphasis should be placed on the run-in and objective area for the locations of visual and radar features that will assist in proper identification.

16.4.7.1. Drop Zone Safety Boxes. Drop Zone safety boxes will be identified and briefed for all airdrops to include both SCNS tolerances and visual references for the lateral and longitudinal boundaries. Safety box construction will be validated by a pilot or another navigator.

16.5. Briefings.

16.5.1. Mission Briefings. The aircraft commander is responsible for ensuring all crewmembers are briefed on applicable mission items. The standard mission briefings can be found in AFTTP 3-3.C-130E/H.

16.5.2. Mission Debriefings. Hold immediately after the mission. The standard mission debriefing can found in AFTTP 3-3.C-130E/H.

16.5.2.1. Aircrews should attend the operations and maintenance debriefings as directed by unit or mission commander. Maintenance debrief should be conducted ASAP after flight.

16.5.2.2. Intelligence debriefings will be accomplished as soon as practical after mission recovery. Debriefings will be as prescribed in AFI 14-105, *Unit Intelligence Mission and Responsibilities*.

Chapter 17

EMPLOYMENT

Section 17A—-General Procedures

17.1. General. Planners and aircrews should reference AFTTP 3-1.C-130, *Tactical Employment—C-130*, and AFTTP 3-3.C-130E/H for additional mission planning guidance. In a threat situation crewmembers must understand their limitations and those of their equipment. These procedures are not all encompassing; therefore, aircrews are expected to use good judgment, innovation, and common sense to successfully accomplish the mission. ***NOTE:*** Certain technical information was intentionally omitted or generalized to keep this chapter unclassified. Users should be aware that written additions to any portion of this document could cause it to become classified.

17.2. Airfield Requirements. AFI 13-217 depicts the required markings for a landing zone. These markings are desirable for tactical airland operations; however, full markings are not mandatory on runways that are marked or lighted to make the touchdown zone and runway distances readily identifiable, or if the tactical situation does not permit. The ground reception party (ALCE, CCT) will provide communications and navigational aids based on requirements, capability, and the threat environment.

Section 17B—Enroute

17.3. Navigation:

17.3.1. Threats permitting, use all available aids (e.g., map reading, INS/GPS, TACAN) to remain position oriented.

17.3.2. The pilots and other crewmembers as designated by the aircraft commander share responsibility for enroute navigation, terrain avoidance, and time control. During low-level operations, a composite crosscheck is paramount for the pilots to ensure threat avoidance and navigation are not done at the expense of basic aircraft control. The attention of the other crewmembers (navigator, observers) should be focused outside the aircraft, emphasizing threat detection and situational awareness. Limit duties which distract attention from outside the aircraft to mission essential items only.

17.3.3. Maintain flight planned altitude using the best available altimeter setting, radar altimeter information, or terrain.

Section 17C—-Objective Area

17.4. General. Threat analysis, planning, and flexibility are key factors in planning combat airland operations. See **Chapter 16** for specific mission planning procedures.

Section 17D—-Approaches

17.5. General. Plan approaches to the ALZ IAW AFTTP 3-3.C-130E/H and the airfield identification procedures published in the OPORD or SPINS. Where multiple options are

available, select the approach which best minimizes exposure to the threat while still allowing a high probability of landing on the first approach.

17.6. Low Altitude Approaches. Use these approaches primarily when a low altitude ingress is necessary. All maneuvering is done at low altitudes. Enter these approaches from any direction at enroute altitude and airspeed. See AFTTP 3-3.C-130E/H for discussion of advantages/disadvantages and flight parameters for each arrival. These maneuvers may be flown on continuation training and operational missions with passengers aboard. Plan to roll out on final at approach speed no lower than 150 ft AGL.

17.6.1. **ARA.** Use the following guidance when planning ARAs:

17.6.1.1. Day VMC. Plan a minimum of 300 feet AGL modified contour altitude above the terrain using visual references from the IP to a point where the approach begins. If a high approach is used, mark a start climb point.

17.6.1.2. Night VMC. Full ARA procedures should be planned for all night VMC tactical LZ operations IAW **Chapter 11**. Also, see **paragraph 17.12.1**.

17.6.1.3. IMC. Except for contingencies, ARAs conducted in IMC must use approach plates published by the Defense Mapping Agency Aeronautical Center (DMAAC) or approved by MAJCOM. During contingencies, the MAJCOM/A3, or DIRMOBFOR may approve IMC ARA approach plates. Units must comply with any restriction in FLIP or the host nation agreement, and receive written approval from ATC and airspace management authority.

17.7. High Altitude Approaches. Use these approaches when a high or medium altitude ingress is necessary and allow some reconnaissance of the field as you fly over. Base initial altitude, airspeed, and heading on the threat. See AFTTP 3-3.C-130E/H for discussion of advantages/disadvantages and flight parameters for each arrival. These maneuvers may be flown on continuation training and operational missions with passengers aboard. Plan to roll out on final at approach speed no lower than 150 ft AGL.

Section 17E—-Ground Operations

17.8. General. This section outlines procedures to follow when conducting EROs. Crews should spend minimum time on the ground when accomplishing EROs. Preparation and a thorough briefing enhance your ability to operate quickly and safely. Brief appropriate ground personnel and subsequent aircrews on unexpected hazards encountered during takeoff or landing, e.g., dust, winds, hostile activity.

17.8.1. **Engine Running On-load and Off-load (ERO) Procedures.** Use ERO procedures when necessary to expedite aircraft or cargo movement, meet time requirements of unit moves, joint training exercises, and contingencies or enhance crew duty day. The PIC is responsible for prior coordination with 618 AOC (TACC) or the controlling agency for approval for ERO operations as well as early takeoffs. With the exception of small arms ammunition (Hazardous Class/Division 1.4), do not use ERO procedures when explosive cargo is involved unless authorized in the JA/ATT, exercise operation or contingency air tasking order. ERO procedures may be used for any mix of personnel or cargo. Material handling equipment should be used if palletized cargo is to be on-loaded or off-loaded. PICs must assess prevailing weather, lighting and parking location to ensure safe operations. At

their discretion, PICs may ERO any category of passenger. The number of passengers and amount of baggage to be on-loaded or off-loaded should be taken into consideration. W**ARNING:** Do not on-load or off-load through the crew entrance door and cargo ramp and door at the same time. Paratroop doors will not normally be used.

17.8.1.1. General Procedures.

17.8.1.1.1. PICs will brief crewmembers on the intended ERO operation.

17.8.1.1.2. The parking brake will be set and at least one pilot in the seat will monitor brakes, interphone, and radio.

17.8.1.1.3. Use wing leading edge and taxi lights to enhance safety at night as the situation dictates.

17.8.1.1.4. Station another crew member on interphone or public address (PA) in the cargo compartment as safety observer. Safety observers will remain forward of all cargo.

17.8.1.2. Offload Preparation/Procedures. Prior to landing, the loadmaster will brief all personnel in the cargo compartment regarding their locations, duties, and responsibilities during the ERO.

17.8.1.2.1. Brief drivers offloading vehicles on the following items:

17.8.1.2.1.1. Exact offload procedures and applicable signals to be followed.

17.8.1.2.1.2. When cleared by the loadmaster, to assume their position. Actuate brake pedal sufficiently to ensure brakes are operational. Vehicles requiring a build-up of air pressure to provide brake pressure must delay pressure build-up until engine start.

17.8.1.2.1.3. The loadmaster will direct vehicle engines to be started when the aircraft comes to a complete stop and the cargo ramp and door are open.

17.8.1.2.1.4. Vehicle parking brakes will not be released until all restraint is removed and cleared by the loadmaster.

17.8.1.2.1.5. Vehicles will proceed directly aft of the aircraft at least 50 feet before turning and/or 300 feet before stopping.

17.8.1.2.2. Brief troops on the following items:

17.8.1.2.2.1. Secure baggage aboard vehicles, if applicable.

17.8.1.2.2.2. Deplane when directed by the loadmaster.

17.8.1.2.3. Proceed directly aft of the aircraft at least 50 feet before turning and/or 300 feet before stopping.

17.8.1.3. After the aircraft is slowed to taxi speed, the loadmaster may remove all tiedowns except one forward and one aft restraint, open the aft cargo door, and lower the ramp to approximately 12 inches above horizontal. **WARNING:** If a combat offload of pallets is to be accomplished before offloading vehicles, do not remove any vehicle restraint until after the combat offload is complete.

17.8.1.4. After clearance from the pilot, the loadmaster lowers the ramp, and clears off headset to direct on-load or off-load operations.

17.8.1.4.1. The loadmaster will direct all on-load and off-load operations using pre-briefed signals. Other qualified loadmasters (CRG, aerial port) may perform these duties; however, the aircraft loadmaster retains overall responsibility for the operation.

17.8.1.5. Personnel on/offload through the aft cargo door and ramp.

17.8.1.5.1. Passengers will be escorted by a crewmember or qualified CRG, aerial port, or airfield control (e.g. STT) personnel when enplaning or deplaning through the aft door and ramp.

17.8.1.5.2. Auxiliary ground loading ramps should be used.

17.8.1.5.3. Unless cargo size and location dictate otherwise, deplane passengers before cargo, and enplane after cargo.

17.8.1.6. Personnel on-load and off-load through the crew entrance door:

17.8.1.6.1. Station a crewmember (normally the loadmaster) on interphone with cord held taut at approximately 20-feet at an angle of 45-degrees from the aircraft axis.

17.8.1.6.2. Brief deplaning personnel to secure loose articles and remain forward of the interphone cord.

17.8.1.6.3. No enplaning personnel will approach the airplane until the loadmaster is in place.

17.8.1.7. Upload Preparation/Procedures. Review the passenger and cargo manifests, crew lists, and complete DD365-4 for the subsequent sortie.

17.8.1.7.1. Loadmasters may use the load plan total weight and load center of balance (CB) for entry on the DD365-4 provided these procedures are followed:

17.8.1.7.1.1. The load plan data must be checked and validated by a qualified load plan validator i.e., aircraft loadmaster, aerial port specialist, or any individual who has completed the AMC Affiliation Program Airlift Planners Course.

17.8.1.7.1.2. The load plan validator will legibly sign the signature block on the load plan with name, rank, and organization.

17.8.1.7.1.3. The load must be placed on the aircraft exactly according to the load plan.

17.8.1.7.1.4. Prior to flight, if there is any doubt on the accuracy of the load plan weight or CB, the loadmaster must accomplish the DD365-4 by station loading each individual item.

17.8.1.7.1.5. If downloading to an empty aircraft, a DD365-4 is not required for the subsequent sortie.

17.8.1.8. After completion of on-load or off-load, secure the ground loading ramp(s) in the installed position (if mission dictates), in the cargo compartment, or stow them in the aft cargo door.

17.8.1.9. AE Engines Running On-loads. For AE missions requiring engine running on-loads/off-loads, see **Chapter 20**.

17.8.1.10. Ramp will be raised to approximately 12-inches above the horizontal position prior to taxi.

17.8.2. **Combat Off-load Procedures.** The controlling C2 commander, MAJCOM A3/DO/XO or the commander, or DIRMOBFOR may authorize combat offload when conditions warrant. The method of combat offload will be determined by the aircrew based on the conditions at the offload site. Unit OG/CC may approve unilateral combat offload training.

17.8.2.1. Cargo pallets, airdrop platforms, and CDS containers can be offloaded without damage to the aircraft with the cargo ramp in the horizontal position. Use the following methods for combat offload operations.

17.8.2.1.1. Method "A." Use this method to offload single, multiple, ramp or married pallets, airdrop platforms, and CDS containers. Pallets, platforms, or CDS may be offloaded in a train like fashion or one-by-one as the situation dictates. **WARNING:** Many explosive items have specific "drop" criteria that, if exceeded, render the item useless or dangerous to the user. With the exception of small arms ammunition (hazard class and division 1.4), explosives and munitions shall not be combat offloaded without approval of MAJCOM/A3/DO unless rigged for airdrop. **CAUTION:** A taxiway or ramp at least 500 feet long is required, however, 1,000 feet is desired to provide a margin of safety. When pallets, platforms, or containers are offloaded one at a time, use a longer taxiway based on the number to be offloaded. **NOTE:** Combat offload of fragile and sensitive cargo items (i.e., computers) that might be damaged by standard method “A” combat offload procedures will not be attempted without user concurrence. If the nature of the mission dictates that cargo must be offloaded, aircrews may lower the ramp to approximately 18 inches above the ground.

17.8.2.1.1.1. Single or double/triple married pallets may be offloaded, without ballast, using this method provided their total weight does not exceed 12,000 pounds, and the height of the pallets fall within cargo height jettison limit in section III of the flight manual or Chapter 5 of the cargo loading manual.

17.8.2.1.1.2. Airdrop rigged platforms up to 24 feet in length may be offloaded, without ballast, using this method provided their total weight does not exceed 12,000 pounds. **NOTE:** Single or married pallets and airdrop rigged platforms over 12,000 pounds may be offloaded using this method, provided ballast or cargo equal to the difference between 12,000 pounds and the weight of the pallets or platforms (to be offloaded) remains in C through F compartments during offload. **Example:** A 17,000 pound married pallet or airdrop platform requires 5,000 pounds of ballast or cargo to remain in C through F compartments during the offload.

17.8.2.1.1.3. CDS bundles may be combat offloaded using this method. The static line retriever will be used via manual activation; manual gate cut may be done if the retriever is inoperative. With the Centerline Vertical Restraint (CVR),

offload must be accomplished one side at a time if the total bundle weight exceeds 12,000 pounds. Non-CVR single stick may be offloaded if the total weight is less than 12,000 pounds. Without the CVR, if the total weight of the bundles exceeds 12,000 pounds, bundles should be restrained in groups of four or less and offloaded one group at a time. For the unplanned combat offload of non-CVR bundles, restrain the bundles as described above. Perform an initial offload via the static line retriever, and on sequential offload remove aft restraint before clearing the pilot to taxi. Consider the slope of the offload site, which may cause bundles to roll aft upon removal of restraint. **CAUTION:** When using method "A" on excessively rough, sharply undulating, or battle-damaged surfaces, damage to the aircraft ramp may occur. Reducing forward taxi speed on these surfaces will reduce aircraft oscillation. The PIC must determine if the offload area will permit the offload operation to be conducted without damage to the aircraft or equipment.

17.8.2.1.2. Method "B." Use this method to offload married pallets that do not fit the category for method "A" or for which no ballast is available for married pallets weighing between 12,000 to 15,000 pounds. Use four serviceable steel 55-gallon drums under each pallet to be offloaded. The correct number of steel drums needed to complete this type of offload must be available at the offload site or must accompany the load when conditions at the offload site are unknown. **WARNING:** The maximum weight for pallets to be off-loaded across the ramp at any one time when using method “B” is 15,000 pounds for C-130E, and H aircraft. Do not use method "B" for airdrop-rigged platforms to prevent binding the platform under the vertical restraint rails.

17.8.2.2. Aircrew Procedures:

17.8.2.2.1. Prior to commencing combat offload operations, the pilot will brief each crewmember on the method to be used. Specific procedures are in the expanded checklist. The pilot will coordinate tasks.

17.8.2.2.2. All crewmembers participating in the offload will refer to the checklist. Report any problem to the pilot immediately.

17.8.2.2.3. If other individuals must be aboard to assist the crew in an unusual circumstance, give them a thorough safety and procedures briefing for the entire offload sequence.

17.8.2.2.4. A safety observer will take position at the bottom of the flight deck steps on interphone and PA and transmit warnings through all speakers of the PA system to help the loadmaster enforce all safety precautions.

17.8.2.2.5. The loadmaster will maintain constant interphone contact with the PIC and is the only crewmember authorized to operate the dual rail locks during combat offload operations. **WARNING:** During the entire offload operation, no one is permitted behind or beside the load unless the loadmaster checks that all rail locks are locked and engaged in the pallet detents or secures’ each pallet to aircraft tiedown rings to ensure positive aft restraint. Always maintain forward restraint with the right-hand locks.

17.8.3. **Emergency Airlift of Personnel.** Apply the following procedures to ensure a safe, efficient loading method for the emergency airlift of personnel and aeromedical evacuation of litter patients from areas faced with enemy siege, hostile fire, for humanitarian evacuations, or when directed by the MAJCOM C2. See **Chapter 20** for additional information concerning emergency airlift of litter patients.

17.8.3.1. Emergency airlift normally is accomplished without the use of individual seats or safety belts. The maximum number of personnel who may be airlifted by seating them on a pallet sub-floor in the cargo compartment will vary. Seat personnel in rows facing forward and load in small groups of 8-10 per pallet so they may be positioned and restrained by connecting the pre-positioned tie-down straps from the left and right outboard pallet rings. Load personal effects/baggage in any safe available pallet position.

17.8.3.2. General Procedures:

17.8.3.2.1. When available, mattresses or other cushioning material may be used for seating.

17.8.3.2.2. When available, a pallet subfloor may be installed.

17.8.3.2.3. When a pallet subfloor is installed, or when the intermediate rollers are removed from the aircraft, use the rail rings for attaching the tiedown strap used for forward restraint and body stability.

17.8.3.2.4. When a pallet subfloor is not used, consider removing the intermediate rollers from the aircraft, mission conditions permitting.

17.8.3.2.5. When the intermediate rollers are not removed from the aircraft, secure them on the outboard rails.

17.8.3.2.6. Seat troops, passengers, and ambulatory patients facing forward.

17.8.3.2.7. Attach a tiedown strap for each row of personnel to provide forward restraint and body stability.

17.8.3.2.8. When the intermediate rails are stacked on top of the outboard rails, use floor rings for attaching the straps. In this situation, the available seating space is decreased, and the number of passengers must be decreased.

17.8.3.2.9. Secure baggage on the cargo ramp/floor. Excess baggage and cargo secured on the cargo ramp/floor will decrease the number of troops, passengers, and patients proportionately.

17.8.4. The maximum altitude for emergency airlift will not exceed FL 250.

Section 17F—-Departures

17.9. General. Consider the same factors used for arrival planning. Plan your departure to minimize the time spent within the threat environment, either egressing low level or spiraling up to altitude.

17.10. Low Escape. Use this departure when a low altitude escape is necessary.

17.11. High Escape. Use this departure when a high or medium altitude escape is necessary.

Section 17G—-NVG

17.12. NVG Operations. ALZ lighting patterns will be IAW AFI 13-217. AMP 4 (blacked out runways) operations are not authorized.

17.12.1. NVG Approaches and Landings. The navigator will program a backup ARA approach in SCNS and configure the radar to monitor the approach course to assist the pilot in LZ acquisition, approach, and landing.

17.12.1.1. NVG Formation Departures/Arrivals. The mission commander will thoroughly brief NVG formation departures/arrivals to include emergency procedures, abort calls, light discipline, runway markings, etc.

17.12.1.2. Crew Coordination. Coordinated actions during the final segment of an NVG approach and landing are critical.

17.12.1.2.1. Navigator Duties. In addition to backing up the pilots with the radar, while on final the navigator should call altitude alerts every 100' (or as requested by the pilot) and should call when descending through 100', 50', 40’, 30’, 20', and 10' (or as requested by the pilot). On departure the navigator should call out passing 50', 100', 200', 300' and 400' AGL, and will ensure terrain clearance with the radar.

17.12.1.2.2. PM Duties. Beginning at 300' AGL, the PM should verbalize airspeed and rate of descent ("107, down 6" indicates 107 KIAS and a minus 600 VVI). The PM should also call out when passing 60 KIAS on landing roll.

17.12.1.2.3. Engineer Duties. The engineer's primary job is to monitor engine instruments and ensure checklist completion. The pilot will brief the engineer of any additional crew coordination requirements.

17.12.1.3. Tactical VFR Approaches. While VFR approaches afford flexibility in axis of approach, they demand thorough preflight planning and coordinated aircrew actions. The PIC will consider all mission aspects, including individual crewmember proficiency and qualifications when selecting an appropriate tactical VFR approach. For tactical VFR approaches, bank angle will not exceed 45 degrees and the aircraft will not descend below 150’ AGL until rolled out on final. The first pilot to acquire the landing zone should state “Pilot/Copilot has the LZ”. The next pilot to acquire the zone should announce “Pilot/Copilot has the LZ at (state clock position)”.

17.12.1.4. IMC Approaches. IMC approaches may be flown by either pilot. The pilot flying may execute the instrument approach with NVGs down but shall not use NVGs during the instrument portion (pilot flying will have to "look under" the NVGs for instrument crosscheck). The transfer of aircraft control for the landing will be no lower than 300' AGL. Altitude advisories shall be in accordance with earlier chapters of this regulation. The first pilot to acquire the landing zone should state “Pilot/Copilot has the LZ”. The next pilot to acquire the zone should announce “Pilot/Copilot has the LZ at (state clock position)”.

17.12.2. Ground Operations.

17.12.2.1. ERO. It is recommended that LMs use NVGs to maintain situational awareness. Blacked out operations are prohibited. Goggles may be worn under NVGs for eye protection.

17.12.2.2. Taxi/backing. Pilots may taxi using NVGs on airfields without lights (blacked out) or equipped with overt or covert lights. If taxiing or accomplishing ground ops on blacked out taxiways/runways/ramps, the PIC will ensure aircraft or environmental lighting provides for clear definition of taxiway/runway/ramp edge. Comply with all taxi restrictions in **Chapter 5** and the GDSS/ASRR. The LM may provide the pilot with directions to taxi the aircraft while using NVGs. **WARNING:** If ever in doubt as to obstruction clearance, stop the aircraft, obtain additional wing walkers/marshallers and/or deplane crewmembers to act as wing walkers.

17.12.2.3. Combat Offloads. Crews may accomplish Combat Offloads on NVGs provided aircraft or airfield lighting permit clear definition of taxiway/runway.

Chapter 18

AIRCRAFT FORMATION

18.1. General. The standard formation building block is a two-ship element. Techniques to fly C-130 formation are outlined in AFTTP 3-3.C-130E/H. Consider safety, aircrew capability, proficiency, survivability and user needs when planning any formation tactic.

18.2. Specified Times. The mission commander determines the sequence of events and mission times based on ATO, fragmentation order, and staff input, fuel requirements, parachutist/passenger comfort, taxi distances, briefing requirements, etc.

18.3. Weather Minimums.

18.3.1. Formation takeoff and landing minimums are the minimums for the airport navigation aid used, but not lower than 200 feet and one-mile visibility (RVR 5000). During IFR formation operations, adhere to both ceiling and visibility minimums. If departure ceiling or visibility is below published landing minimums, but above 200 feet and one-mile visibility (RVR 5000), the formation may take off if the requirements for a departure alternate as prescribed in **Chapter 6**, are met. If the runway has dual RVR readouts (approach and departure end of the runway) both ends must be at least RVR 5000.

18.4. Ground Operations.

18.4.1. Minimum taxi interval is one aircraft length with four engines operating and two aircraft lengths with two engines operating. Formation lead may increase taxi intervals if circumstances dictate.

18.5. Takeoff.

18.5.1. The minimum takeoff interval between aircraft is 15-seconds.

18.5.2. For aborts during takeoff, the navigator immediately transmits an abort call (three times using formation position number) on interplane and the copilot on primary frequency. Clear the runway as quickly as safety allows. Succeeding aircraft not on takeoff roll will hold until the runway is clear. **NOTE:** For aircraft without “hot mike” capability on primary radio, the navigator transmits the abort call on primary, and the copilot (or navigator if the copilot is occupied with emergency procedures) transmits on interplane. **NOTE:** Consider not using Have Quick or secure radio for interplane during takeoff.

18.5.3. Do not advance power above flight idle until takeoff roll is started.

18.6. Altimeter Setting. Formation leaders will ensure all aircraft use the same altimeter setting.

18.7. Formations.

18.7.1. Formations will normally consist of 2-ship elements. During mission planning, mission commanders will choose a formation geometry appropriate to the mission and tactical situation. At no time will aircraft be operated within 500 feet of another aircraft.

18.7.2. Airspeed Changes. Lead will announce airspeed changes of 15-knots or greater at night.

18.7.3. Inadvertent weather penetration procedures will be briefed to the formation. At a minimum, formation lead will direct the formation to a safe altitude, heading, airspeed, and aircraft spacing. Refer to AFTTP 3-3.C-130E/H for inadvertent weather penetration procedures.

18.8. Visual Geometries.

18.8.1. Basic visual spacing should be 2000-6000 feet between aircraft in an element and 8000 feet between element leads. SKE must be operational for night, unaided visual formations or the formation is restricted to 2000 feet in-trail. The optimal formation composition and geometry will depend on mission requirement, theater restrictions, terrain, and the tactical situation.

18.8.1.1. Flight leads will brief visual formation contracts.

18.8.2. For visual geometries, refer to AFTTP 3-3.C-130E/H.

18.8.3. Night Geometries. Crews may fly visual in trail, fluid trail, and tactical formation maneuvering (TFM) during night NVG formation tactical missions. To fly night TFM, see **paragraph 18.10.2**.

18.8.4. NVG Threat Reactions for Training. NVGs are required for night threat reactions. Crews must exercise vigilance to ensure the aircraft remains within the NVG en-route altitude corridor or climb to MSA while conducting threat reactions. **NOTE:** Any crewmember will call “Terminate” if they observe the aircraft being flown outside the above parameters.

18.9. Visual Rejoins.

18.9.1. Rejoining aircraft will maintain 500 feet above or below the formation until the formation is in sight and clearance to rejoin is granted.

18.9.2. Rejoining aircraft must be in position at formation altitude by “green light” to accomplish the drop.

18.10. Tactical Formation Maneuver Restrictions.

18.10.1. Day VMC: No restriction.

18.10.2. Night VMC:

18.10.2.1. NVGs will be used.

18.10.2.2. Formation contracts and verbal signals will be pre-briefed.

18.10.2.3. SKE should be operational.

18.10.2.4. Due to aircraft limitations, consider using line abreast NVG formation only when required by the tactical situation.

18.10.2.5. Shackles, cross turns, and half cross turns should be limited to times when necessary for formation maneuvering. Verbal signals must be used. Normally, shackle, cross turn, and half cross turn training should be conducted during day VMC. **WARNING:** When flying at night, rapid changes in airspeed, altitude, bank angles, “G” loads and aircraft position necessitated by the performance of these maneuvers increase the potential for spatial disorientation.

18.10.2.6. The MC will brief lighting procedures (if the wingman calls “blind”, etc.).

18.10.2.7. Wingmen should avoid flying the line right/left positions for extended periods of time.

18.10.2.8. Fluid trail spacing will be no closer than 2000' between aircraft.

18.10.2.9. Crews will brief altitude and airspeed terminate criteria for threat reactions.

18.11. Visual Slowdown Procedures.

18.11.1. Unless tactically unsound, night slowdowns will include an aural or visual signal.

18.12. Visual Airdrop Procedures.

18.12.1. Minimum spacing for CDS airdrops is 6,000 feet between aircraft. **WARNING:** Attempting to regain position by only reducing power or airspeed places the aircraft in a nose high, low-power situation and may lead to a stall.

18.13. Visual Recovery. Lead determines the type of visual recovery based upon formation geometry, threat scenario, traffic pattern, traffic flow, etc. Attain traffic pattern altitude and airspeed before arriving at the recovery field.

18.13.1. Downwind Recovery.

18.13.1.1. Roll out on final at no less than 150 feet AGL. Aircraft will not descend below preceding aircraft during the recovery.

18.13.2. Overhead Recovery.

18.13.2.1. Roll out on final at no less than 150 feet AGL. Aircraft will not descend below preceding aircraft during the recovery.

18.14. Landing. The desired landing interval is 20 seconds, minimum 15 seconds. **WARNING:** Do not perform touch-and-go landings during formation recoveries.

18.15. SKE Procedures.

18.15.1. Use the pressure altimeter and GSI to monitor altitude during climb or descent. The formation lead announces the altitude passing each 2,000 feet (including departure and recovery). All aircraft report reaching assigned altitude in sequence to the formation leader. Formation lead will not report the formation level to ATC until all aircraft have reported level at the assigned altitude.

18.15.2. Priority of FCI signals are: altitude, heading and airspeed.

18.15.3. Unless otherwise briefed, spacing between aircraft will be 4000 feet and spacing between element leads will be 8000 feet. Minimum SKE spacing is 4000 feet between aircraft.

18.15.4. Lead will signal turns of 10 degrees or more and airspeed changes of 10 KIAS or more.

18.15.5. Element leads will not exceed 20 degrees of bank for planned enroute turns. For formation check turns all aircraft (including element leads) will use 30 degrees of bank unless otherwise briefed.

18.16. Loss of SKE-Individual Aircraft. Notify lead in all cases.

18.16.1. VMC.

18.16.1.1. If only the Direct View Storage Tube (DVST)/plan position indicator (PPI) is inoperative aircraft may elect to maintain position with lead‘s concurrence. The route, drop, and recovery may be flown. **NOTE:** Consider using air-to-air TACAN or radar to maintain spacing.

18.16.2. IMC.

18.16.2.1. Loss of all SKE indications will require a breakout. Use the following procedure if an alternate plan was not briefed:

18.16.2.2. If the formation is in straight and level flight climb 500 feet, turn 30 degrees in the safest direction from the base heading for 30 seconds, and then return to base heading. If the formation is in a turn, roll out and climb 500 feet. Lead will contact (or direct contact to) ATC for a separate clearance. ***CAUTION:*** Performing the above maneuvers in a radar pattern may place an aircraft outside of protected airspace.

18.17. SKE Rejoins.

18.17.1. Set leader number as required to the formation according to lead‘s direction and enable all formation slot numbers.

18.17.2. Set “range” X 1,000 feet, switch at maximum range.

18.17.3. Approach the formation from 1,000 feet above or below the formation.

18.17.4. Establish radio contact with the formation. Confirm SKE frequency and appropriate leader‘s slot number.

18.17.5. When the formation appears on the DVST/PPI, check that the master lost indications have been extinguished.

18.17.6. The rejoining aircraft will identify the appropriate element leader. Upon positive identification, lead completes an FCI check prior to the rejoin.

18.17.7. Join in position while maintaining 1,000 feet altitude separation. When stabilized in position and the last formation aircraft is positively identified, request rejoin clearance from lead and climb or descend to formation altitude.

18.17.8. The rejoining aircraft must be stabilized in position at formation altitude by the IP (IMC) or by one-minute prior to the TOT (VMC) to accomplish the drop.

18.18. SKE Airdrop Procedures.

18.18.1. All aircraft will use formation lead's drift to determine SKE crosstrack. Non-AWADS formation aircraft must ensure they use the same ballistic wind for identical SCNS programming. AWADS formation aircraft may use their own computed wind. After level at drop altitude, formation lead will pass back revised drift and ballistic winds if different.

18.18.2. Slowdown. The entire formation will slowdown simultaneously. Lead signals 30 seconds prior to slowdown with the SKE “SD” button. Lead transmits a 5-second “-“ prep. Lead initiates slowdown with the FCI “E” and a radio call (tactical situation permitting). After slowdown, element leads will not exceed 10 degrees of bank.

18.18.2.1. Descending Slowdown. Upon reaching 140 KIAS, the formation may descend to drop altitude. Start descent using 140 KIAS and 1,000 feet per minute until reaching drop altitude. Do not initiate descent until the following conditions are met:

18.18.2.1.1. Lead position is positively identified.

18.18.2.1.2. The entire formation is within 3 NMs of DZ run-in course centerline.

18.18.2.1.3. The last aircraft in the formation is at or past the DZ entry point (or the last aircraft in the flight or element if using the waterfall descent procedures.).

18.18.3. Each element stacks 50-feet above the preceding element's drop altitude. Wingmen maintain the same drop altitude as their element leaders by reference to the pressure altimeter and SKE TWS. For large formations, i.e., greater than two flights, all aircraft within a flight will maintain the same drop altitude with following flights stacking 50-feet above the preceding flight‘s drop altitude. **WARNING:** Analyze pre-drop gross weight to determine if obstructions can be cleared with one engine inoperative. If obstruction clearance cannot be met, adjust the number of aircraft, reduce aircraft gross weight, revise run-in and/or escape course, or increase drop altitude. **NOTE:** Do not attempt AWADS/SKE airdrops in areas of thunderstorm activity, heavy precipitation, or during icing conditions.

18.18.4. During the run-in, element leaders will maintain formation position in relation to their flight leader (TWS) until they are established on drop altitude and airspeed. When these two requirements are met, element leaders are cleared their own independent run-in to their own CARP.

18.18.5. Non-AWADS element leads must verify SCNS accuracy via visual ground references or SCNS ETE timing window, TWS, and SCNS XTRK, as prescribed in AFTTP 3-3.C-130E/H, no later than the 5 second advisory.

18.18.6. AWADS run-in requirements:

18.18.6.1. AWADS leads will verify at least two different Offset Aim Points (OAPs) during the run-in.

18.18.6.2. AWADS leads will have an OAP active on the run-in at least from the 1-minute advisory through the escape point.

18.18.6.3. For additional AWADS information, reference AFFTP 3-3.C-130E/H.

18.19. SKE Formation Landing.

18.19.1. The interval between aircraft for landing is 6,000 feet desired, 5,000 feet minimum.

18.20. C-130E/H/J Interfly Procedures. Reference AFFTP 3-3.C-130E/H for C-130E/H and C-130J interfly procedures.

Chapter 19

AIRDROP OPERATIONS

19.1. General. This chapter provides guidance for C-130 airdrop operations. It provides parameters used to employ the techniques and procedures of AFTTP 3-3.C-130E/H.

19.1.1. Airdrop above 3000 feet AGL. Equipment and CDS drops performed above 3000 AGL will be made using one of the following methods: AWADS, Ground Radar Aerial Delivery System (GRADS), precision airdrop systems, or a radar beacon airdrop. A SKE wingman may execute a SKE timing drop provided the leader navigates to the release point by AWADS, GRADS, or a radar beacon.

19.1.2. Airdrops overwater can be planned up to 5000’ AGL using standard methods.

19.2. Identification of Airdrop Items. It may be necessary to identify items that are not dropped or land off the DZ in unsecured areas.

19.2.1. Identify supplies or equipment by the following class numbering system:

19.2.1.1. Class I - Subsistence.

19.2.1.2. Class II - Individual equipment.

19.2.1.3. Class III - POL.

19.2.1.4. Class IV - Construction materials.

19.2.1.5. Class V - Ammunition (include the type):

19.2.1.5.1. Type "A" - Small arms.

19.2.1.5.2. Type "B" - Mortars.

19.2.1.5.3. Type "C" - Artillery.

19.2.1.6. Class VI - Personal demand items.

19.2.1.7. Class VII - Major end items (vehicles, howitzers, etc.).

19.2.1.8. Class VIII - Medical supplies.

19.2.1.9. Class IX - Repair parts.

19.2.1.10. Class X - Non-military programs (i.e. agricultural supplies).

19.3. Airdrop Kits. The loadmaster will carry enough equipment in the airdrop kit to satisfy load or mission requirements. Minimum contents of airdrop kits will include cloth-backed pressure sensitive tape, masking tape, 1/2-inch tubular nylon cord, 550 cord, 5 cord, 80 pound cotton webbing, one carabineer (NSN 4240-01295-4305 or equivalent carabineer with a locking mechanism), and two small G-14 clevises. For LCLA airdrops, three carabineers are required.

19.4. Joint Air Drop Inspection.

19.4.1. The loadmaster will complete the applicable DD Forms 1748, *Joint Air Drop Inspection Records*, before takeoff (see AFJI 13-210/AR59-4/OPNAVINST 4630.24D/MCO 13480.1D, *Joint Airdrop Inspection Records, Malfunction Investigations, and Activity*

Reporting, 23 June 2009 for specifics) and verify the accuracy of cargo and troop documentation. The Joint Airdrop Inspector (JAI) will check all possible items for all loads to be dropped during that mission. For loads that require in-flight rigging, the Joint Airdrop Inspector will annotate on the DD Forms 1748 which items are required to be completed during flight, and the aircrew loadmasters will ensure those items are completed and checked. No further inspections by the Joint Airdrop Inspector are required. **NOTE:** Reject loads with inaccurate or unavailable weights, or loads hazardous to flight. Equipment not rigged per 13C-series technical orders or Joint Special Operations Command 350 series manuals, requires a waiver from the Quartermaster Center and School at Fort Lee Va, or Natick Soldier Systems, Natick Ma. This includes unilateral training loads.

19.4.2. If loads to be airdropped and loads to be airlanded are carried at the same time, see the restrictions listed in **Table 19.1** These restrictions are designed to prevent airland loads from interfering with airdrop rigging equipment.

Table 19.1. Load Planning Restrictions.

	RESTRICTIONS	MINIMUM DISTANCE (INCHES)
1.	ANCHOR CABLE HEIGHT FROM AIRCRAFT FLOOR	80”
2.	RETRIEVER WINCH CABLE/PULLEY FROM AIRCRAFT FLOOR	84”
3.	DISTANCE BETWEEN ANCHOR CABLES; (a) CDS OR EQUIPMENT (b) PERSONNEL 1 (1) FORWARD BULKHEAD (2) CENTER ANCHOR CABLE SUPPORTS	 108” 6" INBOARD, 64" OUTBOARD 76" INBOARD, 76" OUTBOARD
4.	AIRLAND CARGO HEIGHT	CANNOT INTERFERE WITH OVERHEAD RIGGING EQUIPMENT CDS ONLY -- 80" HEIGHT[2]
5.	CARGO LOCATIONS ON PERSONNEL AIRDROPS	TROOP DOOR EXIT: NO CARGO

	(STATIC LINE OR HALO)	BETWEEN FS 657-737. RAMP EXIT: FORWARD OF FS 700.
6.	PERSONNEL DISTANCE FROM AIRDROP RIGGING EQUIPMENT	60"
7.	SAFETY AISLE TO REAR OF AIRCRAFT[3]	ALL MISSIONS, ALONGSIDE OR OVER TOP OF CARGO
8.	ACCESS TO DUAL RAIL CONTROL HANDLES	SIDEWALL SEAT 1L AND 2L NOT USED
9.	ACCESS TO OPERATE CDS EQUIPMENT	SIDEWALL SEAT 1L AND 2L NOT USED

NOTES:

1. Personnel airdrops may be performed with only one troop door configured for airdrop with user concurrence.

2. Will not exceed 80" within 12" either side of retriever cable. Height of cargo outside of the 12" left and right (total 24") may exceed the 80" height limitation, but will not interfere with overhead rigging equipment.

3. CDS and heavy equipment configuration. A maximum of three rows of canvas seats may be used. The remaining vacant row serves as a safety aisle. All sidewall seats will be raised or stowed in the wheel-well area when airland pallets and vehicles are located within this area and exceed 96" width.

19.5. Verification of Load Information. The navigator will verify the actual number and type of parachutes, load weights, sequence of extraction, and position of loads in the aircraft agree with planned CARP data. If an individual load has a different type or number of parachutes from other loads, compute a CARP for each load to ensure all loads will land on the DZ. Base drop altitude on the item requiring the highest drop altitude.

19.6. Marking Airdrop Loads. For training missions (e.g. unilateral, exercise, or JA/ATT) the navigator will mark all equipment and standard airdrop training bundles with the aircraft call sign and date. If more than one load is dropped on the same pass, mark loads with order of exit from aircraft. Markings will be placed on the extracted end of the load, and also between the extraction parachute and attachment to the floor. **EXCEPTION**: If more than one CDS bundle is dropped on the same pass, mark only the first container out.

19.7. DZ Markings. Plan and coordinate DZ markings according to AFI 13-217.

19.8. Safety Equipment.

19.8.1. Personnel required to be mobile in the cargo compartment will wear protective headgear from the combat entry point to the combat exit point if an actual threat is briefed. **EXCEPTION:** Personnel performing water jumps. All other personnel will be seated with the seat belt fastened. Check helmet boom mike during preflight. Loadmasters will lower their helmet visor (except when NVGs are used) before opening any doors and keep them lowered until doors are closed. As a minimum, the helmet will be worn from the start of the pre-slowdown checklist until the completion of the drop checklist. Loadmasters will be on interphone from completion of pre-slowdown checks until completion of the drop checklist.

19.8.2. During airdrops, loadmasters will wear a restraint harness from the pre-slowdown checklist until doors are closed and locked. When using a restraint harness, loadmasters performing duties near an open ramp and/or door in-flight will attach the lifeline IAW **paragraph 19.8.3**. If carried, loadmasters may wear a parachute instead of a restraint harness. Parachute will be worn from the pre-slowdown checklist until doors are closed and locked. **WARNING:** During the aircrew briefing, the PIC will brief the loadmaster(s) when the mission profile requires flight below 800 feet AGL with the door(s) open. **NOTE:** Loadmasters must wear a restraint harness when performing duties near an open exit above 25,000 feet MSL or below 800 feet AGL.

19.8.3. When used, fit the restraint harness and adjust the lifeline before flight as follows:

19.8.3.1. Troop door personnel drops. Connect the hook to tiedown ring 26D and adjust the lifeline to allow mobility only to the troop door for installation of the paratroop retrieval strap/bar and to accomplish other emergency procedures. When dropping with CVR sections 2 and 3 installed, connect the hook to the CVR tiedown ring near floor tiedown ring 25D.

19.8.3.2. Troop door SATB drops. Connect the lifeline as described in **paragraph 19.8.3.1** or to a floor/dual rail tiedown ring at FS 657 and adjust to allow mobility only to the troop door being used.

19.8.3.3. Ramp and door operations. (See **paragraph 19.8.3.3.1** for ICDS/JPADS guidance) Loadmasters will pre-measure the harness with the ramp and door in the ADS position prior to flight. Connect the hook to a floor/dual rail tiedown ring at FS 677, adjusting to a point that will preclude the wearer from exiting the aircraft. Restraint harness lifelines may be attached to an unused anchor cable provided the anchor cable stop is positioned and taped at FS 677. **WARNING:** Except for an actual contingency, towed trooper, or emergency that threatens the survivability of the aircraft and crew, the restraint harness will not be disconnected or lengthened to a point that would allow the loadmaster to fall outside the aircraft.

19.8.3.3.1. ICDS/JPADS operations. When pre-flighting the restraint harness for dropsonde airdrops, pre-measure the harness with the ramp in the closed position. Connect the hook to a floor/dual rail tiedown ring at FS 737, adjusting to a point that will preclude the wearer from exiting the aircraft. For the subsequent cargo airdrop, connect the hook to floor/dual rail tiedown ring no further aft than FS 677, adjusting to a point that will preclude the wearer from exiting the aircraft. Restraint harness

lifelines may be attached to an unused anchor cable provided the anchor cable stop is positioned and taped at FS 677.

19.8.4. Loadmasters will wear a LPU for operations over bodies of water when doors are open and a parachute is worn or with restraint harness below 2000 feet.

19.8.5. During an airdrop, occupants in the cargo compartment will either have a seat belt fastened, wear a restraint harness, or wear a parachute (if carried) before doors are opened. **EXCEPTION:** Flight examiner loadmasters are exempt from wearing a parachute or restraint harness while conducting flight evaluations provided they do not go aft of FS 677. For static line jumps, static lines are attached to anchor cables before doors are opened. **EXCEPTION:** Jumpers exiting on subsequent passes (racetracks) may stand and hook up with doors open if they are forward of the aft edge of the wheel wells (FS 617). **NOTE:** Do not use flight deck restraint harness.

19.8.6. Two parachutes for Army safety personnel will be provided during joint airdrop training missions. Units may provide additional parachutes when requested by the user.

19.9. Secure Enroute Communications Package (SECOMP). Use of SECOMP will cease at the discretion of the PIC if it interferes with either aircraft equipment or an aircraft emergency condition.

19.10. Airdrop Weather Minimums and Wind Restrictions. Comply with published AFI 11-202V3 and FLIP VFR weather minimums for visual airdrops. For non-CONUS VFR airdrops, comply with host nation VFR criteria if more restrictive than AFI 11-202V3. Comply with AFI 13-217 for minimum DZ weather/wind restrictions.

19.11. Tactical Checklists. Tactical checklists found in the applicable TO 1C-130xx-1 will be used.

19.11.1. During the PIC's crew briefing, the pilot, navigator, and loadmaster will coordinate appropriate times or geographical location for execution of all tactical checklists. The time required by the loadmaster will determine when checklists must be accomplished enroute. Complete all items of the preceding checklist before beginning the next checklist. The combat entry checklist will be accomplished prior to entering the tactical or threat environment or when deemed necessary by the PIC. **EXCEPTION:** The "SLOWDOWN CHECKLIST" may still be in progress after the "ONE MINUTE ADVISORY". **NOTE:** Avoid use of the word "green" or "light" from the slowdown checklist until arriving at the release point.

19.11.2. The "twenty minute", "ten minute", "one minute", and "five second" advisories are required for all personnel airdrops. Only the "one minute" and "five second" advisories are required for equipment and CDS airdrops. Additional advisories may be provided at crew discretion if requested by the user and pre-coordinated with the aircrew. **NOTE:** Loadmaster will ensure jumpmasters receive all time advisories, wind updates, and no-drop decision when passed.

19.11.3. The navigator will give accurate time advisories regardless of the tactical checklist in progress. Advisories are based on planned TOT up to slowdown. After slowdown, all advisories are based on green light time from the DZ. **NOTE:** During personnel airdrops, the aircraft must be at or above drop altitude and stable not later than one minute out (two

minutes out for jumpmaster directed drops) to allow the jumpmaster access to the paratroop door. The loadmaster will notify the PIC when an emergency condition exists in the cargo compartment, complete the required emergency checklist and report completion of the malfunction checklist or status. Normal tactical checklists are resumed if possible. If not possible, proceed with the completion of drop checklist.

19.12. Airdrop Altitudes and Airspeeds. See AFI 11-231 for specific airdrop altitudes and airspeeds. The aircraft must be level at drop altitude and on drop airspeed by green light time. Slowdown during personnel drops should be planned to allow jumpmaster access to paratroop doors NLT 1-minute before TOT (2-minutes for jumpmaster directed drops).

19.13. No Drop Decisions. Should the crew believe the drop will occur outside of safe parameters, they will call "no drop" and ensure the red light is illuminated.

19.13.1. The PM and loadmaster will acknowledge the no-drop call. AWADS/SKE flight and element leaders, if able, will continue to provide signals for wingmen as long as the no-drop situation does not affect the wingmen or formation.

19.13.2. In IMC a "no drop" will be signaled via FCI and over interplane, if tactically sound.

19.14. Drop Zone Communications. See AFI 13-217 and AFTTP 3-3.C-130E/H for DZ communication procedures.

19.15. Methods of Aerial Delivery. The following are approved methods of aerial delivery:

19.15.1. Visual Airdrops.

19.15.2. Ground Marked Release System (GMRS). **NOTE:** The user assumes responsibility for airdrop accuracy during GMRS drops.

19.15.3. Verbally Initiated Release System (VIRS). **NOTE:** The ground party accepts responsibility for drop accuracy.

19.15.4. Jumpmaster Directed (JMD) Personnel Release Procedures.

19.15.4.1. Jumpmaster directed drops are limited to single ship airdrop operations only. These drops may be performed by qualified AF or sister service jumpmasters (or trainees under supervision of qualified personnel). Units will receive approval notice through the mission tasking directive from 618 TACC/XOOMJ for AMC-directed missions or from the appropriate theater command and control agency, annotated on JA/ATT Form 612R, tasking order, etc. The following conditions apply:

19.15.4.1.1. The jumpmaster's parent service/user accepts all responsibility for the accuracy of the drop, plus any potential injuries/damage to equipment.

19.15.4.1.2. Specific in-flight visual signals, verbal signals, and interphone procedures between the jumpmaster, loadmaster, and PIC will be coordinated during the pilot, loadmaster and jumpmaster briefing.

19.15.4.1.3. Navigators will still accomplish Computer Air Release Point (CARP) or High Altitude Release Point (HARP) calculations to back up the computations and in-flight directions given by the jumpmaster.

19.15.4.1.4. Navigators will update the jumpmaster in-flight on actual wind information and any changes to the crew's preflight computed CARP location.

19.15.4.1.5. JMD releases will not be mixed with any other type of airdrop method, i.e., GMRS, VIRS, or standard CARP drops. If JMD drop procedures are called for, the crew will follow the jumpmaster's instructions, while adhering to normal safety concerns. Should the crew believe the drop will occur outside of safe parameters, they will call "no drop" and ensure the red light is illuminated.

19.15.5. AWADS Airdrops. AWADS-equipped units are authorized to make airdrops using AWADS equipment in VMC or IMC.

19.15.6. Radar Beacon Airdrops. Radar beacon drops in IMC during peacetime must be approved by MAJCOM/A3/DO for active duty units and either HQ AFRC/A3 or ANG/A3 for AFRC/ANG units. The AOC/AMD may approve IMC radar beacon airdrops for exercises or for contingency and combat operations.

19.15.7. I-CDS / JPADS Procedures

19.15.7.1. I-CDS and JPADS airdrop operations are conducted using the JPADS Mission Support Equipment (MSE) (UHF Dropsonde Receiver Subsystem (UHF-DRS), GPS Retransmit System (GPS-RTS), Precision Aerial Delivery System Mission Planner (PADS-MP) laptop and software. I-CDS operations are conventional ballistic CDS airdrops with non-steerable chutes using the JPADS MSE, PADS-MP, and Dropsondes to calculate an improved CARP. JPADS operations are conducted using steerable chutes with Autonomous Guidance Units (AGUs).

19.15.7.2. Airdrop Damage Estimate (ADE): Units must perform a full airdrop damage assessment prior to CDS/I-CDS/JPADS airdrops. The ADE must be coordinated and approved by the area controlling agency. Coordinate with the owning agency of the restricted airspace or controlled airspace and landowners with property surrounding the DZ for all CDS/I-CDS/JPADS operations. Examine the area in the vicinity of the DZ for potential damage or hazards in the course of normal operations or during extraordinary system failure events. If the ADE demonstrates potential damage or hazards restrict the airdrop release Launch Acceptability Region (LAR); lower the drop altitude, change the run-in, change parachute type or cancel airdrop operations. Inform the controlling unit of the risk to their operations; the controlling unit, and the JFC designated agency are approving authorities for risk to the area surrounding the DZ. Intelligence personnel are responsible for providing the JFC-designated agency close-up and overview imagery to facilitate ADE. For actual JPADS training airdrops, units will contact AMC/A3DT (2-3 weeks prior) in order to ensure all planning, coordination and reviews/assessments have been accomplished. Operations conducted at Yuma Proving Ground under JPADS related test plans do not need AMC/A3DT review. See AFI 13-217 for further information. The ADE must include, at a minimum, a review of the airspace and ground space with respect to: CARP and LAR location, 63% 1-sigma I-CDS success ellipse, Chute failure footprint and Guidance failure footprint.

19.15.7.3. The PO or mission planner is required to provide JPADS-MP derived CARP(s) for each airdrop pass and a completed ADE prior to airdrop mission execution. Both pilots will review preflight CARP(s) and ADE for each respective airdrop. During the cargo door Dropsonde release, use of zero flaps at speeds between 170 – 180 KIAS is required to preclude Dropsonde tail strikes. Loadmasters will open the cargo door for the Dropsonde airdrops. Loadmasters will release the Dropsondes from the corner of the

cargo ramp, which will be in the fully closed position. Upon hearing and seeing "GREEN LIGHT", release the Dropsonde at a 45-degree angle away from the corner of the ramp.

19.15.7.4. Intermediate gates made of ½-inch tubular nylon or greater and will be rigged on all JPADS-equipped CDS bundles. Intermediate gates are used to ensure 3-second separation between bundles. Intermediate gates will not be considered restraint when computing aft restraint requirements. All additional aft restraint requirements will be met utilizing normal aircraft restraint provisions. Cut the release gate(s)/intermediate release gate(s) IAW **paragraphs 19.29.3** or **19.29.3.1**.

19.15.7.4.1. For single stick JPADS drops, all intermediate gates will be manually cut by the loadmaster. Double stick JPADS drops are not authorized.

19.15.7.5. JPADS certified aircrews are authorized to airdrop above 3,000 feet AGL without the use of radar beacon, GRADS, or AWADS when using JPADS procedures and equipment.

19.15.7.5.1. For I-CDS operations, GPS Figure of Merit (FOM) 3 (including single GPS/INS equipped aircraft) or verification of waypoints by AWADS offset aimpoints is required. For JPADS operations, GPS FOM 3 (including single GPS/INS equipped aircraft) is required from the 1 minute warning until "Green Light".

19.15.7.5.2. Wind Limits. Wind limitations are unrestricted for Dropsonde operations, 18 knots for JPADS 2K/10K and as published in AFI 13-217 for all other parachutes.

19.15.7.5.3. DZ Size. DZ size criteria for JPADS and ICDS drops during contingency operations is at the discretion of the user. AFI 13-217 DZ size restrictions apply during training.

19.15.7.5.4. JPADS Guidance Footprint Locations. During normal training operations a JPADS DZ, CARP, chute failure footprint and guidance failure footprint will be located within a restricted airspace and on military owned property. If winds force the CARP outside of restricted airspace additional coordination with ATC is required prior to airdrop operations. This includes coordination with the ATC agency, filing a Notices to Airmen (NOTAM), and ensuring airspace is clear for the entire guided system's flight profile from the drop altitude to the ground.

19.15.7.5.5. During normal training operations the entire 1-sigma (63%) I-CDS success footprint will be located within the surveyed DZ boundaries. The chute failure footprint must fall within restricted airspace and on military owned property. If outside of a restricted airspace the chute failure must fall on the surveyed DZ. If operating in a restricted area and winds force the CARP outside of restricted airspace, coordination with ATC is required prior to airdrop operations. This includes coordination with the ATC agency, filing a NOTAM and ensuring airspace is clear from the drop altitude to the ground.

19.15.7.6. IMC/VMC day/night drops are authorized for contingency operations. CONUS training operations are required to comply with FAR 105 restrictions. Drops conducted thru or originating from IMC are only authorized from within or above an

active restricted area. Before conducting IMC drops, check with the controlling agency for additional local restrictions. JPADS parachutes will not be dropped thru severe turbulence or severe icing.

19.15.7.7. Aircrew Procedure. After the JPADS-MP produces a CARP it is entered into the SCNS. The pilot not flying and PO will verify the CARP and all airdrop parameters are entered correctly into the navigation system. For verification, the PO will read the JPADS-MP computed release point coordinates directly from the JPADS-MP while the pilot not flying verifies the same information is in the aircraft navigation system.

19.15.7.8. Jettison of JPADS AGU with MILGPS. Instances of jettison, unauthorized access, tampering, theft, or loss of the JPADS MILGPS enclosure must be reported to the GPS Controlling Authority (CA). Each report shall include the JPADS MILGPS serial number and Selective Availability Anti-Spoofing Module (SAASM) GPS serial number of the missing item and must state whether the system was keyed or unkeyed. US Army Product Manager Force Sustainment Systems (PM FSS) will relay such jettison to the GPS CA. ***NOTE***: Time permitting; the LM with concurrence from the PO will remove the MILGPS enclosure from the AGU prior to load jettison.

19.15.7.9. JPADS AGU MILGPS Procedure. For training missions with Air Force JPADS AGUs aircrew will check out the MILGPS from the tactics office. Upon mission completion and prior to removing the MILGPS enclosure, power up the AGU and accomplish the Recovery Mission Duration Zeroization (RMDZ) function. Zeroize prior to removal by pushing, for three seconds, the zeroize button located on the front panel of the MILGPS enclosure. ***NOTE***: Keying and unkeying requires the MILGPS to be installed in a powered ON AGU. The AGU LCD screen should update within 20 seconds and should read MILGPS Keyed or Unkeyed. Once complete power OFF the AGU. The PO will remove and return the enclosure to the Unit's Tactics Office.

19.16. High Altitude Airdrop Oxygen Requirements.

19.16.1. A continuous supply of 100 percent oxygen will be used during unpressurized operations IAW **Table 19.2**.

19.16.2. When dropping from 20,000 feet MSL or higher, use pre-breathing procedures. When the aircraft oxygen system does not provide sufficient oxygen regulators for all personnel, approved portable oxygen console(s) will be pre-flighted and installed in the aircraft. The console(s) will provide enough oxygen regulators for all parachutists and crewmembers not accommodated by the normal aircraft system.

19.16.3. All airdrops above 25,000 feet MSL require a waiver to AFI 11-202V3 for unpressurized flight, from Air Force Flight Standards Agency (AFFSA) Oklahoma City, OK through MAJCOM/A3V. MA-1 portable oxygen units (with serviceable web carrying straps) equipped with A-21 regulators will be provided for each person aboard the aircraft except parachutists. **WARNING:** No personnel will be exposed to unpressurized flight at or above 25,000 feet MSL more than four times each 7 days or 30,000 feet MSL more than three times each 7 days. In addition, they must have at least 12 hours between exposures to or above 25,000 feet MSL and at least 22 hours between exposures to or above 30,000 feet MSL.

19.16.4. Pre-breathing requirements for missions at or above FL 200. All personnel will prebreathe 100 percent oxygen below 16,000 feet MSL pressure altitude or cabin altitude on

any mission scheduled for an exposure at or above FL 200 for times shown in **Table 19.2** Operational considerations dictate that pre-breathing must be completed before the cabin altitude exceeds 16,000 feet MSL. The aircraft commander, with recommendations from the PT, will determine the course of action for a break in pre-breathing. All personnel on board the aircraft will remain on 100 percent oxygen until cabin altitude is below FL 200. After descent below FL 200, all personnel will remain on 100% oxygen or select supplemental oxygen until 10,000 feet MSL. Pre-breathing will be conducted with a personally-fitted oxygen mask attached to an approved helmet and personal oxygen system. **NOTE:** Portable oxygen bottles may not be used for pre-breathing; the quick-don/smoke mask is emergency equipment and is not approved for pre-breathing or operations conducted at or above FL 200.

19.16.4.1. The purpose of pre-breathing (denitrogenation) is to reduce the amount of nitrogen in the body and therefore reduce the risk of altitude-induced decompression sickness (DCS). Pre-breathing times are based on scientific research that outlines acceptable DCS risks. Major factors that enhance the effectiveness of denitrogenation are good hydration and good circulation.

Table 19.2. Prebreathing Requirements and Exposure Limits for High Altitude Operations.

Altitude	Oxygen Requirement	Pre-breathe Time (3)	Maximum Exposure Time Per Sortie (1) (2)
10,000 to 12,999 ft MSL	Aircrew: 100% O_2 Jumpers: See AFI 11-409	N/A	Aircrew: Unlimited Jumpers: See AFI 11-409
13,000 ft MSL to FL199	100% O_2	N/A	Unlimited
FL 200 to FL 249	100% O_2	30 Min	110 Min
FL 250 to FL 299	100% O_2	30 Min	60 Min
FL 300 to FL 349	100% O_2	45 Min	30 Min

NOTES:

(1) Maximum exposure time per sortie is when cabin altitude reaches maximum planned altitude; extended or delayed ascent times expose everyone onboard to greater DCS risk; missions that require staggered altitude drops will use accumulative times per sortie information for mission planning. Mission planned drops at FL350, FL299, and FL249; 30 minutes upon reaching FL350, descend to FL299, spend only 30 minutes (60 accumulative), descend to FL249, spend only 50 minutes (110 minutes accumulative). Limits based on not exceeding 23% DCS under laboratory conditions (<1% operational impact such as abort or mission alteration/descent).

(2) Total flight time (without supplemental oxygen) above 10,000 ft. MSL shall not exceed 1 hour if any portion of the flight above 10,000 ft. MSL is in IMC, at night, or when using NVGs, employing weapons, conducting airdrop or air-refueling, or performing high-g maneuvers.

(3) No more than 3 Pre-breather sorties in a 24-hour period unless otherwise restricted.

19.16.5. The jumpmaster may dictate the use of supplemental oxygen by any or all jumpers at altitudes less than those listed. Parachutists transfer from the aircraft oxygen system or portable oxygen console to a personal oxygen system at approximately one minute before green light.

19.16.6. Pressurization Scheduling. Maintain cabin pressure at or below 10,000 feet until the Cabin Altitude Check and the Pre-Slowdown checklist (time for check may have to be adjusted) are complete. Depressurization will not exceed 3,000 feet per minute. Slower rates are recommended if time allows. Ensure zero pressure differential before opening doors.

19.17. High Altitude Airdrop Loadmaster Requirements. Loadmaster requirements will be based on the following criteria:

19.17.1. Two loadmasters will be used on actual equipment drops utilizing the ramp and door. ***EXCEPTION***: One loadmaster may be used on unilateral single CDS container drops using manual gate cut procedures, or personnel airdrops up to 13,999 feet MSL provided only one exit is used (ramp and door or, only one paratroop door).

19.17.2. Two loadmasters will be used on all airdrops 14,000 feet MSL and above.

19.18. High Altitude Operational Requirements for Physiology Technicians (PT). PTs will support high altitude airdrop missions IAW AFI 11-409, *High Altitude Airdrop Mission Support Program*. One USAF PT is required for each 16 personnel on board the aircraft for all unpressurized high altitude missions conducted at or above 20,000 feet MSL. PT support for high altitude missions below FL200 is by request to further mitigate risks and is highly recommended. All CONUS requests for PT support must be made to the USAF High Altitude Airdrop Mission Support (HAAMS) current operations desk (DSN 731-7389). PACAF requests must be made to Kadena AB, JA (DSN 315-634-1967). **NOTE:** The USAF HAAMS Program Manager, 19 AMDS/SGPT, 1090 Arnold Dr, Little Rock AFB 72099, DSN 731-7389, may authorize variations to the PT-to-personnel ratio.

19.19. High Altitude Airdrop PT Duties.

19.19.1. PTs will fly as crewmembers as stated on aeronautical orders. When missions require a PT, the PT will be on interphone at all times. PT flight duty stations will be as required to monitor crewmembers, jumpers, and oxygen equipment. PTs will:

19.19.1.1. Preflight aircraft supplemental oxygen equipment.

19.19.1.2. Advise and aid loadmasters in positioning and securing oxygen equipment.

19.19.1.3. Brief crew and jumpers prior to the first mission on physiological problems that may be encountered, the importance of proper pre-breathing, and any special requirements.

19.19.1.4. Advise the PIC, crew, jumpers, and other personnel on use of oxygen equipment and on the depressurization schedule.

19.19.1.5. Monitor personnel, aircraft and supplemental oxygen equipment, and aircrew flight equipment.

19.19.2. The aircrew or the mission PT will notify HQ USAF/SGPA (DSN 858-4654), and HQ AMC/SGPA (DSN 779-6305) and appropriate Command Coordinator for Aerospace

Physiology, for any incident involving decompression sickness or loss of consciousness by the most expedient manner.

19.20. High Altitude Airdrop Conduct of Operations.

19.20.1. For communications and signals, interphone and hand signals are the primary methods of communications. Written messages may be necessary in some instances to communicate with individuals not connected to the aircraft interphone. Loadmasters will carry a suitable writing utensil and medium to write out messages that cannot be dealt with by using hand signals. When dropping parachutists, the jumpmaster may monitor interphone. The loadmaster will coordinate all hand signals with the jumpmaster.

19.20.2. Crewmembers will wear parachutes or restraining harnesses in the cargo compartment any time the doors are open during high altitude airdrop operations. Safety harnesses are worn on airdrops conducted above 25,000 feet MSL. (**EXCEPTION**: PTs may wear a parachute on drops above 14,000 feet MSL but will not position themselves near an open exit.) LPUs must be worn with parachutes for operations over bodies of water with the doors open.

19.20.3. If an oxygen console is used, the loadmaster will be stationed aft of it to perform in-flight duties. The other loadmaster and physiology technician will be on interphone and normally forward of the oxygen console, if used, to perform in-flight duties. This arrangement will provide a buddy system to check everyone on oxygen.

19.20.4. Maintain interphone contact between the cockpit and the cargo compartment. Both loadmasters must be on interphone from completion of pre-slowdown checks until execution of the completion of drop checklist and the cabin altitude is below 14,000 feet. The jumpmaster may also monitor interphone during high altitude personnel airdrops.

19.21. High Altitude Personnel Airdrop Procedures. CAUTION: Ensure any paratroopers remaining on-board de-arm their parachutes before cabin altitude descends below set parachute activation altitude.

19.21.1. Air deflectors must be operational if paratroop doors are used. If an air deflector does not extend, do not open the affected troop door. **NOTE:** Jump platforms may be used. **WARNING:** The aircraft ramp and door and paratroop door(s) will not be open at the same time.

19.21.2. When parachutists exit from the ramp, all parachutists, with the exception of the jumpmaster, will stand forward of the ramp hinge until the five-second advisory. One or both paratroop doors may be used in lieu of the cargo ramp. The ramp and door or paratroop door may remain open during racetracks if required, provided racetrack altitude is at or above a safe drop altitude and paratroopers are rigged for high altitude airdrops.

19.21.3. For jumpmaster-directed HALO drops, the green light may be turned on one minute prior to the release point. The navigator will provide a standard "green light" call at the jointly agreed upon release point. User assumes responsibility for drop accuracy.

19.21.4. Normally, the jumpers will exit the aircraft at their own discretion; however, their exit must occur during the green light time.

19.22. High Altitude Cargo Airdrop Procedures. Conduct high altitude cargo drops using AWADS, GRADS, I-CDS/JPADS or radar beacon procedures. Heavy equipment airdrops above

14,000 feet MSL will be rigged with the Extraction Parachute Jettison System (EPJS) regardless of the size of extraction chute used.

19.23. Personnel Airdrops.

19.23.1. In the event user personnel plan to jump with mixed parachute types, aircrews will always fly to and drop off the CARP for the main mass of paratroopers. The user assumes responsibility for the drop accuracy of individuals who choose to jump along with the main body of troopers while using a different type parachute. Aircrews will inform user jumpmasters if significant differences exist between CARPs.

19.23.2. Troop seats must have a serviceable retaining strap or be fitted with a pre-measured length of type III nylon cord to secure the seat in a raised position prior to slowdown. Ensure that parachutists have secured their seats, as required, and that no part of the seat protrudes into the aisle.

19.23.3. The loadmaster allows the jumpmaster access to the paratroop doors not later than the one minute advisory. (**EXCEPTION:** The jumpmaster needs a minimum of two minutes in the door for jumpmaster directed drops.) The loadmaster then takes a position on the cargo ramp to provide maximum maneuverability for jumpmasters and safety personnel to perform their duties. **WARNING:** During personnel airdrops, the loadmasters will not position themselves directly under the center anchor cable supports (A-Frame, FS 737) in case of anchor cable or support mounting failure. **NOTE:** At no time will both paratroop doors be opened for paratroop drops if only one loadmaster is on board.

19.23.4. Upon seeing the red jump lights illuminate, the primary loadmaster will notify the jumpmaster or safety personnel of the red light condition. The loadmaster will count, if possible, any parachutists that exit while the red light is illuminated. **WARNING:** Do not attempt to physically stop or hinder jumpers from exiting the aircraft if jumpers continue to exit after "red light".

19.23.4.1. Control of the paratroop doors reverts back to the loadmaster after all parachutists have exited or remaining parachutists have been stopped by the jumpmaster or safety personnel and cleared from the paratroop door area. For racetracks, the loadmaster will retain control of the doors until completing the next slowdown checks.

19.23.4.1.1. Racetrack speeds and flap settings are flown as briefed. The paratroop door(s) may be left open with jump platform(s) extended during racetracks if all paratroopers aft of the aft edge of the wheel-well (FS 617) are hooked up to the anchor cables. Jumpers may stand and hook up to the anchor cable with paratroop doors open provided they are forward of FS 617. Other occupants of the cargo compartment must either be seated with a seat belt fastened, wear a restraint harness, or wear a parachute.

19.23.4.1.2. Avoid flying over water or built up areas while doors are open.

19.23.5. Static line retrieval:

19.23.5.1. The primary method of retrieval is using the static line retriever. The static line retriever will always be rigged and used for emergency retrieval of a towed parachutist. Manual static-line retrieval may be used to retrieve no more than ten static

lines per door, per pass with one loadmaster, or 20 static lines per door, per pass with two people (combination of loadmasters, jumpmasters or safety personnel).

19.23.5.2. Jump platform(s) may be left extended during manual retrieval of static lines. However, if the retriever winch is used, the jump platform must be retracted.

19.23.5.3. When using the Towed Parachutist Retrieval System (TPRS), paratroop door static lines are normally retrieved using the retrieval sling assembly (choker). The retriever assist strap (RAS) is not required for normal retrieval of static lines. Although not required, the RAS may be used for proficiency or instructional purposes during normal static line retrieval.

19.23.6. During combat, cut static lines that cannot be retrieved. On other than combat missions, if the static line retriever fails during retrieval and more than 10/20 static lines are to be retrieved from a paratroop door, manually retrieve the static lines by using a 5,000 pound tiedown strap as follows:

19.23.6.1. Secure the hook end to a point forward enough in the cargo compartment to permit static lines to enter completely in to the aircraft.

19.23.6.2. Pass the other end of the strap under the static line from the bottom up, making a "U" around the static lines.

19.23.6.3. Pull the strap forward to retrieve the static lines into the aircraft. Loadmasters may require assistance to pull the strap forward.

19.23.7. If the static line retriever fails following a combination or tailgate drop, use the following procedure using the Prusik knot.

19.23.7.1. Take a 30-inch piece of 1/2-inch tubular nylon cord that is tied in a loop. Loop the cord around the static line retriever winch cable. Use a minimum of three wraps around the retriever cable to ensure locking of the 1/2-inch tubular nylon cord.

19.23.7.2. Pull to tighten the knot around the retriever winch cable to prevent slipping. Attach a carabineer into the 1/2-inch tubular nylon loop. Attach the hook end of a 5,000-pound strap into the carabineer and pull in the static lines. The 1/2-inch tubular nylon cord will remain locked in place under tension.

19.23.7.3. More than one 1/2-inch tubular nylon cord may be attached to the winch cable using the Prusik knot to facilitate static-line retrieval. The Prusik knot may be adjusted up or down the cable as required. The knot will not slip as long as it is wrapped tightly with a minimum of three turns (more wraps equal more friction) and tension is applied.

19.24. Tailgate Airdrop Procedures.

19.24.1. Tailgate drops are those drops during which parachutists exit from the aircraft ramp. The maximum rigged weight of the parachutist is 325 pounds. Tailgate drops are approved for STT, Pararescue (PJ), Air Force Survival Evasion Resistance Escape (SERE) Specialists, Army Special Forces, Navy SEALS, paratroopers equipped for arctic airdrop, other US and allied special operations personnel, US Army Quartermaster Center and School, Yuma Proving Ground Airborne Test Force, and units for which a combination drop is their normal method of deployment.

19.24.2. Rig both anchor cables and static line retrievers before takeoff to provide maximum mission flexibility. Mission commanders may approve rigging only one cable and static line retriever winch if circumstances dictate.

19.24.3. Use one anchor cable for each pass and limit each pass to a maximum of 20 parachutists. If more than one pass is required, alternate anchor cables, retrieving static lines and deployment bags prior to each additional pass to prevent entanglement. Static lines are retrieved using aft controls. **NOTE:** To ensure full utilization of the aircraft during training, over-the-ramp personnel airdrops may be made with center-aisle seats installed to approximately flight station 650 (aft of escape ladder). When more than 20 static line parachutists are to be dropped on a single pass, the paratroop doors will be used.

19.25. Combination Airdrops.

19.25.1. Combination drops are those during which parachutists exit from the aircraft ramp after equipment extraction or gravity release (CDS, Combat Rubber Raiding Craft (CRRC), Container Ramp Bundle (CRB) etc.).

19.25.2. Combination drops are restricted to single-ship or the last aircraft of an equipment formation. When tailgating parachutists, the drop altitude is determined by the item requiring the highest drop altitude per AFI 11-231. If an additional pass is required to drop all the personnel after a combination CDS drop, close the ramp and door and re-rig the static-line retriever cable as depicted in TO 1C-130A-9.

19.25.3. The navigator will compute a CDS or platform CARP and a personnel CARP (for ten seconds after the equipment release point) using the same IAS and altitude used for the equipment. Inform the jumpmaster if the PI falls within 150 yards of the DZ boundary; the jumpmaster is the final approving authority in this situation.

19.26. Door Bundle Airdrops.

19.26.1. General A-7A or A-21 containers weighing up to 500 pounds (excluding the weight of the parachutes) are referred to as "door bundles" and are dropped from the aircraft through the paratroop door or ramp and door using the personnel airdrop checklist. Door bundles may be dropped independently or with personnel and are limited to one bundle per exit used. When dropped with personnel, the bundle is the first object to exit the aircraft. Remove restraints and position the bundle in the paratroop door or on the ramp prior to completion of the slowdown checklist. (**EXCEPTION:** If the jumpmaster needs the paratroop door for spotting, place the door bundle as close as possible to the paratroop door.) If jumpers are to follow the door bundle, the user is responsible for ejecting the bundle out the troop door or off the ramp. For door bundles exiting over the ramp, secure the forward end of the bundle to a suitable floor tiedown ring with one-half inch tubular nylon. This tie is to prevent premature release of the bundle and will be cut by the loadmaster at the release point.

19.26.1.1. Door bundles dropped from the paratroop doors will be rigged with non-breakaway static lines. Their dimensions, including the parachute, must not exceed 48 inches by 30 inches by 66 inches unless authorized in a specific T.O. When the container is placed in the door for airdrop, the largest dimension will be placed in the vertical or upright position. The parachute must be placed on top of the load, or toward the inside of the aircraft.

19.26.1.2. Door bundles dropped from the ramp and door will be rigged with a T-10 parachute (converted for cargo) or parachute equipped with breakaway static lines (per TO 13C7-1-11, *Airdrop of Supplies and Equip—Rigging Containers*). Also, bundles rigged for a ramp exit are equipped with a skid board compatible with the center roller conveyors. **NOTE:** If no parachutists are to be dropped after the door bundles, non-breakaway static lines will be used. Anchor cable stops will be positioned as depicted in TO 1C-130A-9 for CDS airdrops.

19.26.2. During unilateral single-ship airdrop training, door bundles will not exit aircraft after a paratrooper has jumped. **NOTE:** During joint training, combat or contingency operations, the user determines door bundle requirements and order of exit from any or all personnel airdrop aircraft in the formation.

19.26.3. When door bundles are dropped with personnel, compute the CARP for the first paratrooper exiting after the bundle and compute an additional CARP for the door bundle to ensure that it will impact on the DZ. Release the bundle at the personnel CARP, followed by the parachutists when the door is clear. When a door bundle is the only object dropped, base the CARP on the bundle.

19.27. Equipment Airdrops. Only equipment rigged in accordance with 13-C series T.O.s or JSOC 350 series may be airdropped. The maximum airdrop load to be extracted over the ramp is 42,000 pounds for C-130E/H airplanes 61-2358, 62-1784 and up and 25,000 pounds for other C-130 aircraft. The aerial delivery unit supporting the load movement ensures current publications are available for loadmaster reference during joint inspections.

19.28. Heavy Equipment airdrops with the Extraction Parachute Jettison System (EPJS).

19.28.1. Loadmasters must receive EPJS ground training before using the system during airdrop missions.

19.29. CDS Airdrops.

19.29.1. Reset flaps according to the appropriate CDS flap setting chart and maintain level flight. It is not recommended to drop CDS at gross weights less than 104,000 pounds. If drop must be made, use zero flaps and expect longer than normal exit time. **CAUTION:** The aircraft will tend to pitch up as the load exits the aircraft. This pitch must be controlled to allow no more than two or three degrees additional pitch. Do not over control to the point that negative "G" forces are encountered while the load is exiting the aircraft as this increases exit time or may stop load movement. **CAUTION:** Dropping high altitude CDS bundles at 17,000 feet or above requires proper yoke compensation for shift in center of gravity as the load exits. Premature yoke inputs, over compensation, or no yoke inputs all may result in aircraft tail impacts by exiting bundles.

19.29.2. When the loadmaster calls “load clear”, the flaps should be set to 50 percent.

19.29.3. Loadmasters are permitted to pull down sharply with a gloved hand or on a tiedown strap looped over the static-line retriever winch cable to assist the cut of the release gate. Loadmasters will only pull on the cable after hearing and seeing "GREEN LIGHT”.

19.29.3.1. A manual gate cut is defined as using a knife to cut/release the CDS/intermediate gates. Loadmasters will not cut release gates while in the paratroop doors next to the exiting bundles. Loadmasters will ensure they hear and see “GREEN LIGHT” before

manually cutting the CDS/intermediate release gate. **EXCEPTION**: For LCLA airdrops, "Green light" must be seen or heard by the loadmaster prior to releasing the load. Loadmasters are allowed to go aft of the buffer stop/ alternate forward barrier to manually cut the release gate. Exercise caution to remain clear of exiting bundles. All single stick container loads (CVR and non-CVR) may be released using manual gate cut procedures. Double stick CDS released simultaneously will only be cut using the static-line retriever.

19.29.3.2. When performing a manual gate cut, enter "N/A" into blocks 3, 5, and 6 of the DD Forms 1748-1 Entry C "Type XXVI Nylon Release Gate." Annotate "Manual Gate Cut" into Block 17, Remarks.

19.29.4. Airdrops at or above 3,000 feet AGL will normally be conducted with high velocity parachutes. When necessary for operational missions, airdrops at or above 3,000 feet AGL may be accomplished with low-velocity parachutes with prior coordination through theater CAOC/AMD, and with concurrence of the user and aircraft commander. The user must understand accuracy utilizing low-velocity parachutes above 3,000 feet AGL will be diminished. User must accept responsibility for final bundle condition and the potential diminished accuracy of airdrop loads.

19.29.5. Loadmasters will ensure all CDS bundles (high or low-velocity) are rigged in the following static-line configurations:

19.29.5.1. Non-Breakaway: CDS loads rigged with low velocity chutes dropped below 1000 feet AGL will be rigged Non-Breakaway. CDS loads rigged with high velocity parachutes dropped below 2000 feet AGL will be rigged non-breakaway. **EXCEPTION:** LCADS parachutes will always be rigged for breakaway regardless of altitude.

19.29.5.2. Breakaway: CDS loads rigged with low velocity parachutes above 1000 feet AGL or high velocity parachutes above 2000 feet AGL may be rigged with break-away or non-breakaway. CDS loads dropped at 10,000 feet MSL and above will be rigged and airdropped with breakaway static lines regardless of AGL altitude.

19.29.5.3. Release-away: JPADS 2K loads will be rigged and airdropped with release-away static lines regardless of planned drop altitude.

19.29.6. Release-away, breakaway, and non-breakaway static lines for CDS airdrops (contingency and training), will be rigged utilizing the anti-oscillation tie. **EXCEPTION:** The anti-oscillation tie is not required for a single non-breakaway bundle per cable, per pass. Additional bundles may be rigged on the same/opposite cable without anti-oscillation ties if dropped on separate passes.

19.30. Combat Rubber Raiding Craft (CRRC) Airdrops.

19.30.1. Use the standard CDS checklist. Either two CRRC platforms and up to 18 static-line parachutists or one CRRC platform and up to 19 parachutists may be airdropped on one pass. Checklist and emergency procedures are the same as for CDS airdrops. Wind and sea state limitations are at the discretion of the supported unit. **NOTE:** When airdropping two CRRC platforms, the forward release gate must be cut manually by the loadmaster. When dropping one CRRC, either use the static line retriever or manually cut the release strap.

19.31. Free-Fall Airdrops. Use the normal CDS airdrop checklist and emergency procedures. Single containers not exceeding weight or dimension restrictions for door bundles may be dropped from either troop door using the personnel airdrop checklist.

19.32. High Velocity CDS Airdrops. Use normal CDS aircrew checklist procedures.

19.32.1. Units must establish a marking system to readily identify which 26-foot parachutes are packed for breakaway and non-breakaway static lines. The aircrew must ensure the CDS loads and the high-velocity parachutes are rigged and packed (marked) properly for the planned airdrop altitude (MSL). Aircrew procedures must be consistent with parachute packing.

19.33. Container Ramp Bundles. The CDS Airdrop Checklist will be used with the exception of arming the CDS switch. CDS flap setting must be computed and used to ensure a positive deck angle for the drop.

19.33.1. Current items considered ramp bundles are: Zodiac Boat in A-22 Cargo Bag (RAMZ) rigged IAW FM 10-542/TO 13C7-51-21, *Airdrop Of Supplies and Equipment Rigging Loads for Special Operations,* Small Inflatable Boat (IBS) rigged IAW FM 10-542/TO 13C7-51-21, and One or Two Motorcycles on a Combat Expandable Platform rigged IAW FM 10-577/TO 13C7-55-1, *Airdrop of Supplies and Equipment Rigging Military Utility Vehicles*. Ramp bundles will be loaded and rigged in the aircraft IAW Section 7-IIA of the aircraft TO 1C-130A-9.

19.33.1.1. RAMZ containers are jumpmaster-directed ramp bundle drops regardless of the type parachute used by the STT team. The jumpmaster may use streamers and request additional passes to position the aircraft over the containers and STT release point. Containers are individually secured to the ramp with Type VIII nylon, which is manually cut by the loadmaster on the jumpmaster's command. The STT may exit immediately after container release or on a subsequent pass.

19.33.1.2. For jumpmaster-directed RAMZ airdrops, a navigator's CARP/HARP is not required when using streamers/spotter chutes.

19.33.1.3. For single-pass RAMZ airdrops, compute the CARP/HARP for the RAMZ by dividing the packages weight in two and applying this result to the ballistic data for a single, personnel T-10A/B parachute. If STT personnel jump on the same pass with the RAMZ, combination drop procedures apply.

19.33.2. Alternate Navigator Directed RAMZ Deployment.

19.33.2.1. Accomplish the slowdown using normal procedures.

19.33.2.2. Release point. The navigator determines the release point and assumes the responsibility to call "five seconds" and "green light." At green light, the loadmaster will manually cut the RAMZ bundle loose, which will signal the jumpers are clear to follow the gravity ejected load.

19.33.3. RAMZ Preflight. Prior to flight, the loadmaster will ensure the following items are accomplished:

19.33.3.1. Ensure that no fuel is leaking from the RAMZ bundle. A leaking bundle will not be loaded aboard the aircraft or will be downloaded if already aboard. If one or more

RAMZ with fuel are loaded aboard the aircraft the day prior to flight, the fumes may be decreased/eliminated by venting the aircraft overnight. Close both paratroop doors onto the extended jump platforms and secure them with tie down straps. **WARNING:** If flammable fumes are present, unnecessary electrical equipment/switches will not be turned on or off until the fumes are eliminated. Use 100 percent oxygen and accomplish the Smoke and Fume Elimination checklist as appropriate. **WARNING:** Only 15-foot static line will be used on the RAMZ cargo parachutes. A 12-foot static line extended to 15-feet will not be used. If personnel (rigged for static line airdrop) are to follow immediately after the RAMZ, their static lines will also be 15-feet. **NOTE:** When loaded aboard the aircraft, the vertical restraint tiedown strap on the RAMZ will be secured in such a manner that it is not placed over any fuel bladder, and just tight enough to take the slack out of the strap.

19.33.4. RAMZ Deployment:

19.33.4.1. During the pre-slowdown checklist, vertical, aft and forward restraint straps will be removed from the RAMZ package. Gradually release the forward restraint to allow the package to slowly shift forward against the Type VIII nylon release strap. **WARNING:** Personnel must stand clear of the RAMZ package when removing the forward restraint.

19.33.4.2. At the "one minute" call, the jumpmaster will normally be on the left side of the cargo ramp and may be spotting from the aft end. Additional jumpers will be forward of the RAMZ. The loadmaster will be positioned to retrieve the RAMZ parachute static line D-bag(s) (for HALO airdrops) and to observe equipment and jumpers at all times. At the "one minute" call, the jumpmaster will be alerted and the Type VIII nylon release strap is rechecked. **WARNING:** If a "no drop" is called and the RAMZ is held in place by only the release strap, all personnel will move forward of the ramp hinge, except the loadmaster and the jumpmaster who will monitor the RAMZ for possible shifting and secure as necessary.

19.33.4.3. If the deployment is jumpmaster directed, the jumpmaster will determine the exit point and deploy prior to receiving a "no drop" notification or seeing the red light come on. The loadmaster will relay to the pilot all visual corrections given by the jumpmaster. The jumpmaster will signal for the loadmaster to cut the Type VIII nylon release strap.

19.33.4.4. If the deployment is PIC or navigator directed, the loadmaster will relay pertinent information to the jumpmaster. At the command "green light", the loadmaster will cut the Type VIII nylon release gate and deploy the RAMZ. If jumpers are tailgating, this will signal the jumpers that they are cleared to follow the load. If jumpers are freefall parachuting, they will exit after the loadmaster has retrieved the RAMZ parachute D-bags. **WARNING:** If the RAMZ exits the aircraft, but fails to properly deploy, the static lines will be cut immediately. **CAUTION:** The Type VIII nylon release strap must be cut below the knot to allow the nylon strap to pull free through floor tie down rings.

19.33.5. The RAMZ package will normally be delivered aligned into the wind (+/- 30 degrees) when the wind is 5 knots or greater. The jumpmaster will be advised when this cannot be complied with.

19.33.6. The minimum deployment altitude will be 3500 feet AGL when the STT exits using freefall parachutes. Higher altitudes may be used for training. For operational missions, minimum altitude with the freefall parachutes is 2500 feet AGL. If low ceilings prohibit the use of freefall parachutes, the STT will deploy using static line parachutes immediately following the RAMZ package. The RAMZ and STT will be deployed from the same altitude. The minimum deployment altitude for both RAMZ and STT will be 800 feet AGL.

19.33.7. For training, one or more safety recovery boats will be in position to recover equipment and personnel as required.

19.34. Low Cost Low Altitude Airdrop (LCLA). LCLA airdrop is an aerial delivery system consisting of low-weight airdrop bundles deployed from the aircraft ramp and door at very low altitudes, enabling circular error (CE) accuracy within 100 meters. This airdrop is appropriate for employment within or near a FOB or close to troops. While US Army and USMC fixed- and rotary-wing platforms have traditionally accomplished this mission, theater requirements necessitate MAF aircraft meet ground component requirements. Refer to applicable AFI, TO, TTP, for further LCLA guidance.

19.34.1. Bundles. LCLA bundle size and weight range depends on the rigging procedure and parachute type. Use the low cost polypropylene straps (similar to the A-7A straps) and a 42-inch skid board. ***NOTE:*** IAW TO 13C-7-1-11, *Airdrop of Supplies and Equipment: Rigging Containers*, skid boards require a minimum weight of 28 pounds per square foot. Bundles may be dropped individually or simultaneously from the ramp.

19.34.2. Parachutes. All LCLA parachutes are one-time-use expendable items. MAJCOMs may permit subordinate organizations to reuse 24 and 35-foot cargo parachutes for training purpose only. The following is general information regarding current systems. Until published in AFI 11-231, refer to the LCLA Tactics Bulletin for parachute configurations, associated weight ranges, and ballistics data.

19.34.3. Joint Airdrop Inspection. Accomplish JAI on all bundles utilizing the DD Form 1748-1 in accordance with AFJI 13-210. For bundles to be repositioned, annotate “to be rigged in-flight” in the Remarks section of the DD Form 1748-1.

19.34.4. Checklists.

19.34.4.1. Utilize the CDS AIRDROP checklist for all LCLA airdrops. The PF states “CDS, LCLA PROCEDURES” during the PRE-SLOWDOWN checklist.

19.34.4.2. Consider terrain on/around the DZ when setting the radar altimeter. Consider setting 50 feet below drop altitude to identify any discrepancies between planned MSL drop altitude and the radar altimeter due to an inaccurate altimeter setting. Identify a minimum CARA on the run-in and climb anytime “ALTITUDE, ALTITUDE” is heard.

19.34.4.3. During the slowdown, configure with 50-percent flaps and ramp and door on-speed.

19.34.4.4. Do not remove forward restraint until the ramp is in the horizontal position.

19.34.4.5. Crews may keep the RELEASE POINT checklist open if subsequent airdrops or racetracks are planned at the same DZ or to DZs within close proximity. Base racetrack decisions on mission-specific parameters, such as terrain and threat, and crew proficiency.

19.34.4.6. Execute the airdrop with 50-percent flaps and the ramp and door open.

19.34.4.7. Drop Airspeed. LCLA drop airspeed is 130 KIAS. ***CAUTION:*** LCLA parachutes are limited to 150 KIAS. The parachute's opening shock increases with PA.

19.34.4.8. Drop Altitude. The primary altitude reference should be the planned MSL drop altitude based on the most accurate altimeter setting available. It is critical to cross-check the radar altimeter against the MSL altitude during the run-in.

19.34.4.9. Release Point. Base navigator-directed airdrops on navigator sight angle. The SCNS-derived CARP is secondary for situational awareness.

19.34.4.10. Navigator calls —"5 SECONDS…GREEN LIGHT."

19.34.4.11. The LM must hear "GREEN LIGHT" before initiating the airdrop. Seeing the GREEN LIGHT is highly desired, but not required.

19.34.4.12. LMs should use a J-knife to cut the release gate. Ensure loadmasters cut both layers of Type VIII above the excess if utilizing the Nate Gate. Ensure to cut above the knot if utilizing 1, 9/16, or ½-inch nylon. Do not position the knife near the gate. ***CAUTION:*** Cut the gate towards the inboard of the aircraft. Failure to do so may cause the static line to become entangled with the J-knife and be severed from the load.

19.34.4.13. Escape. Upon hearing "LOAD CLEAR" the PF should advance the throttles as necessary and begin the egress.

19.34.4.14. LMs should clear the ramp and door to close as soon as able after static line retrieval. Once the door is closed, accelerate and continue to climb above the threat, if possible.

19.34.4.15. Load Drift Back. LMs may reposition (i.e., drift) containers weighing up to 650 pounds rigged weight with the ramp and door open for racetracks or multiple DZs. ***CAUTION:*** Do not drift back bundles weighing over 650 pounds in-flight. ***NOTE:*** Conduct a preflight, static rehearsal of drifting to prevent inadvertent bundle release during execution.

19.34.4.15.1. Do not move bundles onto the ramp until the ramp is horizontal. Advise the pilot "Drifting."

19.34.4.15.2. Immediately after the bundle is in position, take an additional carabineer and route it around the type VIII gate and attach it to a tie down ring immediately forward of the load. When tight, this gate will prevent the load from exiting prematurely. The additional carabineer will limit forward travel in the event of defensive maneuvers.

19.34.4.15.3. Two bundles may be moved simultaneously, provided they are positioned side-by-side and both LMs have positive control of each bundle.

19.35. SATBs. A 15-pound training bundle may be dropped to simulate personnel, equipment, or CDS airdrops. Use the applicable tactical airdrop checklist for the type airdrop being simulated. **EXCEPTION:** The loadmaster will use the equipment checklist for simulated CDS airdrops. SATBs may be dropped on the actual heavy equipment or CDS CARP for sight angle airdrop training provided the bundle will land on the DZ. Adjust the drop score for the difference between the SATB CARP and the actual CARP.

19.36. NVG Airdrop Procedures. Qualified NVG airdrop pilots are authorized to perform normal night operations (including low level flying and formation) at night VMC altitudes IAW the tactical chapters of this regulation and AFTTP 3-3.C-130E/H. Airdrops may be accomplished on drop zones marked IAW AFI 13-217 lighting patterns (covert and overt) while wearing NVGs. NVG airdrops on unmarked DZ are prohibited unless permitted by contingency SPINs or coordinated through contingency ATO.

19.36.1. Loadmasters will use NVGs during airdrops if the mission dictates. Loadmasters are authorized to perform airdrops with minimum lighting. Use NVGs as necessary to assist with operations and keep cargo area lighting to a minimum.

19.36.2. Cargo Compartment Lighting. After the Combat Entry Checklist, all cargo compartment lighting will be minimized. Blacked out (no-light) operations in the cargo compartment are not authorized. Loadmasters will carefully consider cargo compartment lighting intensity prior to opening ramp and door to minimize interference with formation wingmen's NVG vision.

19.37. Emergency Procedures. Loadmasters will complete a detailed emergency procedure coordinated task briefing. All crewmembers should review the applicable emergency procedures for the airdrop to be performed before takeoff. If a malfunction occurs during an airdrop, the loadmaster immediately notifies the PIC and takes appropriate action. After all appropriate emergency actions are complete, run the completion of drop checklist. **NOTE:** In the event of a malfunction, incident, or off-DZ drop, do not de-rig, handle or move items unless required for safety of flight. Any follow-on investigation will benefit from seeing the items in the position or state they were in at the time of the event.

19.38. Emergency Parachutist Bail Out Procedures.

19.38.1. Under satisfactory conditions (static-line exit), the minimum acceptable emergency bailout altitude is 400 feet above the terrain. When an aircraft emergency occurs during static-line airdrops, the PIC maintains an acceptable attitude and altitude for the parachutists to evacuate the aircraft. If the jump must be made at an airspeed in excess of 150 KIAS, advise the parachutists of the airspeed and altitude. Order evacuation by turning on the green light and giving the briefed alarm bell signals.

19.38.2. Minimum emergency bail-out altitude for free-fall parachutists is 2,000 feet AGL.

19.38.3. If conditions are unsuitable for aircraft evacuation, turn the red light on until exit doors are closed. The PIC advises the jumpmaster through the loadmaster to have the parachutists unhook, take their seats, and fasten seatbelts.

19.39. Towed Parachutist.

19.39.1. The jumpmaster will stop the remaining parachutists; the loadmaster will notify the PIC; and the PM will turn on the red light. The PF will maintain drop airspeed, at least the minimum drop altitude (AGL) for the type parachute being used, and avoid flying over or up wind of water or built up areas.

19.39.1.1. Crews should suspect they have a towed parachutist if static lines are not fully tucked into the upper corner of the paratroop door or if a D-bag appears to be stuck outside the door. It is unlikely for a D-bag to become caught on the outside of the aircraft and is a probable indicator a parachutist is being towed. In any case, crews should follow

emergency procedures until they have confirmed no parachutist is being towed. Crews should take special effort to confirm towed jumper status at night with limited rearward visibility. They should consider using an additional source of illumination to view the rear of the aircraft.

19.39.2. The jumpmaster or safety observer is responsible for identifying how the parachutist is towed. If being towed by anything other than the static line, the jumpmaster or safety will attempt to free the parachutist. If being towed by the static line, the jumpmaster or safety will make a recommendation to the PIC, through the loadmaster, whether to retrieve the parachutist or cut him or her free. If all parachutists have exited and there is no safety person onboard, this responsibility rests with the loadmaster.

19.39.3. The PIC will make the final decision whether or not to cut the towed parachutist free. If the decision is to cut the parachutist free, the loadmaster will cut the static line on the PIC's command. **NOTE:** Towed parachutists indicate consciousness and that reserve parachute is ready by maintaining a tight-body position with both hands on reserve parachute. This indicates the jumper is prepared to be cut away.

19.39.4. If the parachutist is towed after exit from a paratroop door, the pilot should lower the landing gear and set flaps to 100 percent to reduce parachute buffeting. (See warning below.) If possible, avoid turning the aircraft in the direction of the towed parachutist as this often causes parachutist to swing violently and increases the possibility of injury. All turns should be shallow and coordinated to reduce the severity of parachutist oscillation. During training, the first priority is to retrieve the parachutist whether he or she is conscious or unconscious. However, if the parachutist cannot be retrieved and indicates consciousness, cut the parachutist free. **WARNING:** Although 100 percent flaps selection provides an improved airflow for a towed parachutist, under certain conditions the landing gear down, 100 percent flap configuration may reduce aircraft performance. The PIC must consider density altitude, aircraft weight, position in formation, or other factors deemed important in determining what flap setting between 50 and 100 percent should be used.

19.39.5. For a parachutist towed after exit from the cargo ramp and door, the first priority is to cut the parachutist free if consciousness is indicated. Retrieve if the parachutist is unconscious, does not signal, cannot be observed, or if a condition exists that prevents cutting the static line. **NOTE:** If the parachutist is towed following a ramp exit, it will be necessary to partially rewind the static-line retriever to reach the static line for cutting.

19.39.6. There are two methods for the retrieval of towed parachutists from the paratroop doors. The primary method of retrieval is use of the TPRS. The secondary method of retrieval is to rig a 5,000-pound tiedown strap/paratroop retriever bar in the paratroop door prior to retrieval of the towed parachutist. When the secondary method must be used, the maximum rigged weight of the parachutist is limited to 250 pounds (including equipment, parachute, etc.). **WARNING:** The 5,000-pound tiedown strap/paratroop retriever bar shall not be used with the TPRS.

19.39.7. Parachutist Retrieval Through Paratroop Door Using TPRS.

19.39.7.1. Install the retrieval sling assembly (choker) around all static lines immediately below the static line snap hooks.

19.39.7.2. Install Retriever Assist Strap (RAS) around all static lines.

19.39.7.3. Fold in jump platform.

19.39.7.4. Using the static line retriever winch, retrieve the static lines through the RAS.

19.39.7.4.1. If the static line retriever winch has been modified with the slip clutch assembly, engage static line retriever winch until it slips. If the retriever clutch slips prior to bringing the parachutist into the paratroop door area, determine and remove the cause of the overload, slightly unwind the static line retriever winch to reset the slip clutch, and continue retrieval operation. **WARNING:** During retrieval attempts, take all possible action to ensure the parachutist does not slip back at any time. This does not preclude unwinding the retriever to reset the slip clutch, if necessary.

19.39.7.4.2. Stop retrieval when the cotton sleeve at the apex of the D-bags begin to pass through the RAS.

19.39.7.5. If in the paratroop door area, bring the parachutist into the aircraft by hand. If the parachutist is not in the paratroop door, i.e. positioned in the lower aft corner of the paratroop door, it is necessary to pull the D-bags manually through the RAS. Primary loadmaster maintains control of the static line retriever pistol grip. Secondary loadmaster and safety observer or jumpmaster (if safety observer or jumpmaster are onboard the aircraft) routes the D-bags through the RAS. Once the D-bags have been brought into the aircraft, manually pull them far enough forward so they will not interfere with the remaining retrieval. The primary loadmaster will continue retrieval. When pulled up to the door, bring the parachutist into the aircraft by hand. **WARNING:** All personnel should remain clear of the paratroop door and the line of travel of the static line retriever cable until the parachutist has been retrieved to the door area. **NOTE:** When the parachutist is in the door area and is under the control of the loadmaster or safety observer, or jumpmaster, slightly unwind the static line retriever to relieve tension on the line so the parachutist can be brought into the aircraft.

19.39.7.6. After retrieving the parachutist, the pilot will reset flaps to 50 percent, raise the landing gear (if required), and call for completion of drop checklist.

19.39.8. Parachutist Retrieval Through Paratroop Door Using 5,000-Pound Strap/Paratroop Retriever Bar.

19.39.8.1. Install a 5,000-pound tiedown strap across the paratroop door by threading the hook end of the strap behind the one inch tubular brace located at FS 737, across the door under all static lines, and behind the one inch tubular brace at FS 700. Secure the hook end of the tiedown strap to a floor/rail tiedown ring forward of FS 700 and the ratchet end to any convenient tiedown ring aft of FS 737. Remove as much slack as possible. **WARNING:** Use extreme caution when routing 5,000-pound strap over the oxygen regulators located at FS 740 left and right side. **NOTE:** The strap may be routed prior to the drop at FS 740 provided it is secured and does not interfere with the paratroop door operation or jumpers.

19.39.8.2. Push the static lines to the top of the paratroop door and remove additional slack in the tiedown strap. Fold the jump platform in.

19.39.8.3. If the airplane is equipped with a paratrooper retriever bar, install the bar as follows: The bar is inserted beneath all of the static lines extending out of the door, and

one end is then raised and inserted in the retaining bracket in the aft portion of the door frame. The other end of the bar is then carefully raised and inserted in the forward portion of the door frame. The bar provides a smooth surface for the static lines to ride over as the paratrooper is retrieved back into the airplane.

19.39.8.4. Fold the jump platform in and initiate retrieval using the static-line retriever winch.

19.39.8.4.1. If the aircraft has been modified with the slip clutch assembly to the static-line retriever winch, engage static-line retriever until it slips. If the retriever clutch slips prior to bringing the parachutist into the paratroop door area, determine and remove the cause of the overload. Then, slightly unwind the retriever to reset the retriever's slip clutch, and continue retriever operation.

19.39.8.4.2. On aircraft not modified with slip clutch assemblies, stop retrieval when the cotton sleeve at the apex of the D-bags begins to pass over the 5,000-pound strap/paratroop retriever bar. **WARNING:** During retrieval attempts, take all possible action to ensure the parachutist does not slip back at any time. This does not preclude unwinding the retriever to reset the slip clutch, if necessary.

19.39.8.5. When the parachutist is in the paratroop door area, bring the parachutist into the aircraft by hand. If it is difficult to get the parachutist into the area of the paratroop door, i.e. positioned in the lower aft corner of the paratroop door, it will be necessary to pull the D-bags manually through the opening between the 5,000-pound strap/paratroop retriever bar and the paratroop door.

19.39.8.5.1. The loadmaster maintains control of the static line retriever pistol grip. The other loadmaster, safety observer or jumpmaster will route D-bags through the opening. Once D-bags have been brought into the aircraft, manually pull them far enough forward so they will not interfere with the remaining retrieval.

19.39.8.5.2. The loadmaster will continue retrieval. When pulled up to the door, bring the parachutist into the aircraft by hand. **WARNING:** All personnel should remain clear of the paratroop door and line of travel of the static-line retriever cable until the parachutist has been retrieved to the door area. **NOTE:** When the parachutist is in the door area and is being controlled by the loadmaster, safety observer or jumpmaster, slightly unwind the static-line retriever to relieve tension on the line so the parachutist may be brought into the aircraft. The jump platform may be extended once the parachutist is in the door area.

19.39.8.6. After retrieving the parachutist, the PM will reset flaps to 50 percent, raise the landing gear (if required) and call for the completion of drop checklist.

19.39.9. Parachutist Retrieval Through Ramp and Door. **WARNING:** The TPRS shall not be used during parachutist retrieval through ramp and door.

19.39.9.1. Thread the hook end of the 5,000-pound tiedown strap, front to rear, around the right/left vertical support member at FS 840 approximately 5-1/2 feet above the ramp in the ADS position. Attach the hook end into the strap and draw taut. Run the ratchet end of the strap across the ramp and thread it, front to rear, around the opposite vertical support member at FS 840. Remove all slack from the strap and attach the ratchet end to

any convenient tiedown ring forward of FS 840. Ratchet the strap until taut. **NOTE:** For aircraft with tiedown rings installed at FS 847 (waterline 208), the 5,000-pound tiedown strap may be installed by attaching the hook end of the strap to the sidewall ring at FS 847 on the same side as the towed parachutist with the hook facing forward. Hook the ratchet end of the strap to the opposite sidewall ring at FS 847, remove all the slack from the strap, and ratchet the strap until taut. The strap will be pre-measured prior to pre-slowdown and excess strap taped.

19.39.9.2. Using the static-line retriever, retrieve the static lines over the strap and as the parachutist is pulled up to the ramp, bring the parachutist into the aircraft by hand underneath the strap. **WARNING:** The last 5 feet are the most crucial for the towed parachutist. An oscillating parachutist usually strikes the aircraft head first. If the parachutist is oscillating violently, stop the retrieval momentarily to allow stabilization, and then continue with retrieval. Repeat these steps as required. **NOTE:** After the parachutist is pulled up to the ramp and is being controlled by the jumpmaster, safety observer or loadmaster slightly unwinds the static-line retriever to relieve tension on the line so the parachutist can be brought into the aircraft.

19.39.9.3. After retrieving the parachutist, run the completion of drop checklist. **WARNING:** There is no effective, dependable, or consistently reliable means to manually retrieve a towed parachutist from the paratroop door or ramp and door. Manually retrieving a parachutist is a last resort. Manual retrieval techniques vary, depending on the scenario, and should be used with extreme caution.

19.40. Equipment Emergency Procedures.

19.40.1. When notified of a malfunction, the PF will maintain drop airspeed and AGL altitude (if possible) and avoid flying over or upwind of water or built up areas to the maximum extent possible. **NOTE:** Make no further attempt to airdrop the platform. **WARNING:** Exercise extreme caution when manually cutting the extraction line. Platforms could dislodge from restraint chains, or a malfunctioning EPJS could suddenly initiate the squib and release the extraction line. In all cases, the extraction line will rapidly recoil after the cut. **WARNING:** The combined effects of aircraft gross weight, drop altitude, and temperature may prevent level flight at drop speed when towing deployed extraction parachutes as small as 22 feet. Total drag on the aircraft may be more than the thrust available to overcome it. The situation could require an immediate forced landing near the DZ.

19.40.2. For multiple 28-foot extraction parachutes deployed outside the aircraft, if the load cannot be jettisoned and flight conditions permit, proceed to a suitable airfield, avoid flying over built up areas and land in a flat attitude with ramp and door open. ***WARNING:*** With multiple 28-foot extraction parachutes deployed outside the aircraft, maximum thrust will be needed to stay aloft or to control the descent. The drag produced by the extraction parachutes should decrease if airspeed is allowed to bleed off. This reduction in drag could permit level flight or reduce the rate of descent should level flight not be possible. Do not reduce power to achieve this air speed change and do not slow below max effort takeoff speed. Max effort takeoff speed is 1.2 X power on stall speed and provides an acceptable airspeed margin for zero bank angle. If the aircraft must be turned to get to a suitable landing area, this airspeed may not be sufficient to prevent a stall while in banked flight. If a turn is required, pilots

should be sensitive to the first indication of a stall and reduce bank and or lower nose to decrease angle of attack and eliminate the stall indication. Any power reduction will increase the stall speed. The tradeoff in selecting a landing site, straight ahead or one requiring a turn is a function of the rate of descent the required airspeed will produce. The higher the airspeed, the faster the aircraft will likely descend. A forced landing straight ahead will produce the lowest allowable airspeed, least rate of descent and most desirable impact forces. Any turn will decrease the time before impact. However, the risks associated with turning may be mitigated by the terrain the aircraft will impact such as forest or built up areas.

19.40.3. Upon landing, ensure the load and airdrop system is not tampered with until after the malfunction is investigated by tactics/standardization and evaluation personnel.

19.41. CDS Emergency Procedures. WARNING: When notified of a malfunction, extend additional flaps and lower the nose to maintain a slight nose down attitude until the ramp and door are closed and the load is secured. Maintain drop airspeed and AGL altitude (if possible) and avoid flying over or upwind of water or built up areas.

19.41.1. If a malfunction is due to a failure of the static-line retriever or CDS remote timer system, the mission may be continued provided the 80 lb tie on the knife did not break, and the knife did not nick the gate. Use the opposite static line retriever and manually activate the retriever switch at FS 245 for three seconds or perform a manual gate cut. The DD 1748-2 is not required, but a write-up in the AFTO 781A is required.

19.42. High Altitude Emergency Procedures. If a physiological incident occurs, the PIC will:

19.42.1. Abort the mission.

19.42.2. Begin descent (pressurization and descent will be determined by the type and degree of sickness or pain).

19.42.3. Ensure the affected person remains on 100 percent oxygen until a medical doctor determines the type of treatment required.

19.42.4. Proceed to the nearest base with qualified medical assistance available.

19.42.5. Advise the control tower of the emergency and request an ambulance meet the aircraft.

19.42.6. Advise attending physician to call USAF Hyperbaric Medicine Division; during duty hours call DSN 554-3483 or (210) 292-3483 and after duty hours call DSN 554-5990 or (210) 292-5990. For out of area medical assistance, call the Divers Alert Network (DAN) at 1-800-446-2671.

Chapter 20

AEROMEDICAL EVACUATION

20.1. Mission.

20.1.1. This chapter applies to Air Force C-130 Aircrews, AE Aircrews and all management levels concerned with operations of the C-130 aircraft. All operators involved in AE missions on C-130 aircraft will use this AFI.

20.1.2. C-130 aircraft may be used for AE transport of ill or injured DOD members and their dependents. These AE missions may be directed at any time by C2 agencies. AE personnel will utilize the procedures in applicable AFI 11-2AEV3, *Aeromedical Evacuation (AE) Operations Procedures*, and AFI 41-307, in conjunction with this publication, to accomplish the AE mission.

20.2. Operational Control and Reporting of Aeromedical Evacuation Forces.

20.2.1. HQ AMC is lead command for AE. HQ AMC Directorate of Operations (AMC/A3) is the executive agent for operational AE missions.

20.2.2. Command and control of AE missions is the same as other airlift missions.

20.2.3. The PIC is a qualified pilot responsible for command and control of all persons aboard the aircraft during an AE mission. In matters of flight safety, crew duty waivers, or operational considerations, his/her decisions are final (see AFI 11-2MDS-specific V3 for a more detailed list of PIC responsibilities). In matters of patient care, decisions of the MCD are final.

20.2.4. Medical Crew Director. The MCD is a qualified flight nurse responsible for the overall supervision of patient care and management of AECMs assigned to AE missions. He/she advises the PIC on patients' conditions and the use of medical equipment that may affect aircraft operations. The MCD is directly responsible for the safety and medical well being of patients on the aircraft and coordinates enplaning and deplaning procedures with supporting agencies.

20.3. Alerting Procedures.

20.3.1. At all locations AMC C2 agency will alert the PIC/MCD. The MCD will alert the medical crew. The goal is to link the primary PIC, local AMC C2 agency and MCD before mission execution.

20.3.2. When the AE crew is staged separate from the front-end crew, the MCD will contact AMC local C2 agency and establish alert, showtime, etc. with the C2 agency. The MCD will make every effort to communicate with the front-end crew any mission irregularities prior to crew rest. Utilize local AMC C2 agency to leave messages for non-emergency. Crew rest will be based on scheduled launch time. Do not violate crew rest.

20.3.3. The local AMC C2 agency will provide PIC/MCD AE mission information when he/she checks on mission status. Local C2 agency will be the link between the AE crews and the PIC, thus permitting mission status updates to both parties without interruption of crew rest.

20.3.4. AE mission requirements can change depending on clinical status of patient(s) and aircraft availability. There will be occasions when aircraft cannot depart (i.e. MX problems) or emergency patient movement that may separate an AE crew from the front-end crew. The MCD is responsible for communicating these changes with the PIC and local AMC C2 agency to de-conflict problems

20.4. Pilot in Command Responsibilities.

20.4.1. Establish communications link with the MCD during pre-mission planning and throughout the mission.

20.4.2. Brief AE crew on the mission, flight plan, flight profile, and current threat (as applicable). Identify armed crewmembers (as required).

20.4.3. The PIC will fully integrate front-end and Aeromedical Evacuation Crew Members (AECM) into single crew throughout mission including enroute transportation, dining, billeting, etc.

20.4.4. Coordinate with MCD and C2 agencies for cabin altitude/flight restrictions based on patient requirements. When the sortie is being flight managed, coordinate flight restrictions with the FM if the FM provided plan needs to be modified.

20.4.5. For missions with combined cargo and patients, coordinate with the MCD for loading, positioning, and egress considerations as outlined in **paragraph 20.10**.

20.4.6. Comply with hazardous cargo/passenger restrictions in AFMAN 24-204/TM 38-250/NAVSUP PUB 505/MCO P4030.19I/DLAI 4145.3.

20.4.7. Advise AECMs of intentions to start engines, taxi, itinerary changes, in-flight difficulties, and additional responsibilities of the flight crew.

20.4.8. Transmit load messages and radio transmissions to tasking AE C2 agency as requested by the MCD.

20.4.9. Brief the MCD on additional responsibilities of the flight crew.

20.5. Loadmaster Responsibilities.

20.5.1. Assist the AE crew with aircraft systems.

20.5.2. Coordinate emergency evacuation plan with the MCD.

20.5.3. Operate aircraft systems, (i.e. doors, ramps, emergency exits, etc).

20.5.4. Assist the AE crew as necessary, providing such assistance does not interfere with primary duties.

20.5.5. Operate galley and prepare food and beverages for food service provided to patients by AECMs.

20.5.6. Assist with aircraft configuration for AE operations.

20.5.7. The LM will provide the MCD with an interphone cord.

20.6. Aeromedical Evacuation Crew Responsibilities.

20.6.1. Responsible for patient clinical care activities including loading, positioning, and off-loading.

20.6.2. Assist Loadmaster/maintenance crew with aircraft configuration for AE operations.

20.6.3. Install and remove medical equipment/supplies.

20.6.4. The MCD or designated AECM should monitor interphone (headset) during flight. The MCD will be on headset with the PIC during critical phases of flight and during in-flight emergencies.

20.6.5. The Charge Medical Technician (CMT) is responsible for all ground operations involved with patients. The CMT, in coordination with the loadmaster, is responsible for vehicle movement and positioning around the aircraft.

20.7. Ground Operations.

20.7.1. Engines should be shut down during enplaning and deplaning of patients. ***EXCEPTION*:** ERO procedures as outlined in **paragraph 20.14**.

20.8. Aircraft Refueling.

20.8.1. Refueling normally begins after deplaning patients are off the aircraft and prior to enplaning that station's patients.

20.8.1.1. Simultaneous fuel and oxygen servicing is not authorized.

20.8.2. Fuel Servicing Operations. Unless servicing JP-4, simultaneous servicing of fuel while loading passengers, patients, cargo, performing maintenance, aircrew members performing inspections, or operating aircraft systems is considered to be a normal fuel servicing operation.

20.8.2.1. Normal Fuel Servicing Operations is the simultaneous servicing of fuel or oxygen with or without patients on board while cargo loading/unloading or maintenance operations are being performed. Normal fuel servicing may be accomplished with patients onboard.

20.8.2.2. Prior to starting servicing, the total number of patients, passengers, and crew on board the aircraft will be given to the fire department. ***EXCEPTION***: See guidance below. AECMs and passenger service representatives will not serve as PCMs.

20.8.2.3. The PCM will brief patients on emergency egress, exit prohibitions, and hazards. Ambulatory patients will remain seated but will not wear seatbelts during CS. When possible, the PCM should conduct the briefing prior to servicing.

20.8.2.4. At least two qualified AECMs (one must be a FN) will remain onboard to observe patients and assist patients in the event of an egress.

20.8.2.5. Activities around the aircraft will be kept to a minimum during the refueling process. Onload/Offload patient and passenger baggage prior to or after refueling.

20.8.2.6. Do not use the on board toilet facilities during servicing.

20.9. Aircraft Configuration.

20.9.1. On designated ARM and operational AE missions, configure the aircraft during pre-flight per TO 1C-130A-9 and AFI 11-2C-130 V3 Addenda A.

20.9.2. Litter Support Provisions.

20.9.2.1. Roller conveyers will be stowed, unless required for comfort/baggage pallets. Rollers on the ramp will be stowed during patient on-loading or off-loading operations.

20.9.2.2. Litter patients will be enplaned feet first and deplaned head first due to minimal degree of ramp incline. This eliminates the need to turn litter patients around on the cargo ramp prior to placing them in the litter tier. Patient diagnosis may determine that they be loaded head first.

20.9.2.3. A five (5) high configuration using the center seat and litter stanchions is approved for all AE missions.

20.9.2.4. The seat and litter stanchion ladder will be installed for all AE missions when cargo requirements permit.

20.9.2.5. Litter support straps will be secured to the aircraft floor prior to take-off. If litters are not in the tier, loose litter support straps will be secured in a top and bottom litter support bracket on the center seat and litter stanchion. This will remove a free-swinging strap hazard.

20.9.3. Available litter spaces and ambulatory seating will depend on the aircraft cabin's mission configuration.

20.9.4. Therapeutic Oxygen. Therapeutic oxygen is not an integral system on the C-130 aircraft. Use the PTLOX/NPTLOX system.

20.9.5. Integral patient/passenger emergency oxygen is not available on the aircraft. In the event of an emergency, patients and passengers will use the EPOS.

20.9.6. AECMs will have portable oxygen available. AECMs normally use an MA-1 portable oxygen bottle. If MA-1 bottles are not available, PBE's may be used as portable oxygen. **NOTE:** If a pressure demand regulator is used, the oxygen supply will be turned "off" when the personal oxygen equipment is removed.

20.9.7. Do not secure aircraft or medical equipment adjacent to an emergency exit in a manner that will prevent or impede egress.

20.9.8. Life Preservers. Use the Adult/Child life preserver for patients.

20.10. Passengers and Cargo.

20.10.1. The PIC, with the concurrence of the MCD, will ensure maximum aircraft utilization for passengers and cargo. Passenger restrictions based upon patient considerations will be identified when seats are released. The PIC will advise the appropriate C2 agency of the number seats available for passengers.

20.10.2. Cargo and passengers may be carried with patients unless a clear detriment to the health and well being of the patient or passengers can be demonstrated. The decision will be made by the MCD, considering the need for maximum utilization of the aircraft. Refer to AFMAN 24-204 for hazardous product special provisions rating. P4 and P5 rated hazardous material have no AE restrictions. Conflicts will be referred to the respective tasking AE command element for decision. Litter patients will be positioned forward of cargo pallets. **EXCEPTION**: If cargo is in place, and the PIC and MCD agree, patients may be transported aft of the cargo. The MCD and loadmaster will ensure patient egress is not affected by mixed cargo/patient loads.

20.10.3. Cargo will not be bumped except in unusual/abnormal cases, and only after the MCD has coordinated with the PIC and notified the tasking AE command element.

20.10.4. Do not move ambulatory patients to litters in order to provide seating for additional patients or passengers.

20.10.5. Patient Therapeutic Liquid Oxygen (PTLOX) or Next Generation Patient Therapeutic Oxygen System (NPTLOX) may be transported for positioning and depositioning AE crews. A maximum of 25 PTLOX serviced units may be transported simultaneously without Hazmat certification. Processing through aerial port is not required. If shipping more than six PTLOX containers as cargo, do not cover with plastic. This will prevent potential high concentration of oxygen levels. **WARNING:** Ensure the cargo floor is free from any oil or petroleum products.

20.10.6. AE Movement of Contaminated/Contagious Personnel. It is United States Transportation Command (USTRANSCOM) policy that patients personnel, or casualties with known or suspected contamination from chemical, biological, or nuclear warfare agents will not be transported within the aeromedical patient movement system. Decontamination must be performed prior to transport to prevent the potential spread of contamination. In rare cases, transport may be essential to preserve life or continue critical missions. If such transport is deemed essential, all efforts must be made to prevent the spread of contamination. In these cases, prior approval must be given by the involved geographic combatant commanders, Commander USTRANSCOM, and the Secretary of Defense (SECDEF) in consultation with Department of Defense medical authorities.

20.10.6.1. Patients with known or suspected or highly contagious disease will not be transported within the patient movement system. These include infections with any agent that may pose a potential threat to national security, require special public health actions, and/or have the potential to cause public panic and social disruption. Patients known or suspected to be infected with a highly contagious disease should be treated “in place” or with minimal transportation to medical authorities. In extreme circumstances there may be a requirement to move index cases (approximately two) for evaluation or critical medical care. If patient movement is required, prior approval must be given by the involved geographic combatant commanders, Commander USTRANSCOM, and SECDEF in consultation with medical authorities.

20.10.6.2. AMC will train and equip AE crews and stage required equipment at key hubs to carry out these limited missions for movement of contaminated and contagious patients. ***NOTE:*** If AECMs are utilizing the MCU-2A ground chemical mask, a FL below 10,000 feet is recommended due to reported valve failure during rapid decompression.

20.10.7. Hazardous cargo will not normally be transported aboard AE missions except in extreme circumstances.

20.11. Crash/Fire/Rescue (CFR).

20.11.1. Aircraft carrying patient(s) will be provided CFR protection per TO 00-25-172. When concurrent fuel servicing with patients/passengers on board a major aircraft rescue and fire vehicle will be available to respond within three minutes or as determined by the base

Fire Chief. (***NOTE***: When servicing with JP-4 or Jet B Fuel, a major aircraft rescue and fire vehicle will be positioned at the aircraft).The flight crew will coordinate CFR requirements.

20.11.2. At non-AMC bases, non-U.S. military bases, and civilian airfields, the controlling agency will coordinate the CFR coverage, as necessary. The request for CFR vehicle coverage may be denied. This will not prevent refueling operations from occurring.

20.12. AE Call Sign/Use of Priority Clearance. If a medical emergency occurs during flight, and is determined by the MCD to be an urgent situation, a request for AIR EVAC Priority will be requested. The PIC may request "AIR EVAC priority" for preferential ATC handling if a delay will affect a patient's well being. AIR EVAC priority will only be used for that portion of the flight requiring expedited handling. Do not request priority for routine air evacuations to avoid ATC delays or inconveniences. It is the PIC's responsibility to use this option only for bona fide medical situations that demand priority handling. Use this status judiciously.

20.13. Load Message.

20.13.1. The MCD will complete an AF Forms 3858, *Aeromedical Evacuation Mission Offload Message* and coordinate for transmission of patient information to C2 a minimum of 30 minutes prior to estimated time of arrival.

20.14. ERO Procedures.

20.14.1. ERO procedures are outlined in AFI 11-2AEV3. ERO procedures for loading patients are authorized for contingency operations or when AE mission requirements dictate minimum ground time. ERO procedures can be practiced/trained during Aeromedical Readiness Missions (ARMS), static trainers, joint training operations, exercises, etc. EROs will not be used in a non-contingency environment unless mission essential.

20.14.2. The loadmaster will be positioned in a location to observe safety and on headset during actual on-load procedures. AECM's may exit the aircraft to conduct ground duties. Other guidance (e.g. ROE/Intel/SPINS) may provide additional information.

20.14.3. When litter patients are wearing personal gear (i.e. web belts, canteen, helmets, flak vests, etc.), consider loading four (4) high versus five (5) high in the center seat and litter stanchions, to increase space between litters to accommodate gear. If situation requires/permits, remove personal gear from patients and secure on ramp or in a designated area.

20.14.4. Baggage will be loaded on the aircraft ramp (or as required for weight and balance) and will not impede emergency egress. If duties permit, loadmasters will assist AECMs with securing baggage.

20.15. Floor Loading Procedures.

20.15.1. Floor loading of patients is authorized for all contingency operations when a time critical environment exists (i.e. non-secure landing zones, areas faced with enemy siege/hostile fire, humanitarian reasons, etc.), and minimum ground time is essential. Floor loading procedures can be practiced/trained during ARMS, joint training operations, exercises, etc. The cargo/ramp floor will be configured with all rollers stowed (cargo permitting). Maximum altitude for floor loaded patients is FL 350. Patients will have an EPOS pre-positioned on their litter when floor loaded.

20.15.1.1. Ambulatory Patients. If available, any cushioning material may be used for seating, to prevent the patient from having to sit on the cargo floor. Seat ambulatory patients to face forward in the aircraft. Attach a cargo tie-down strap for each row of patients, in a manner that it will provide forward restraint and body stability. See TO 1C-130A-9 for proper use of the tie down device.

20.15.1.2. Litter Patients. Refer to AFI 11-2AE V3 Addenda A for securing litter patients.

Chapter 21

EMERGENCY NUCLEAR AIRLIFT OPERATIONS (ENAO)

21.1. General. The objective is to move nuclear weapons safely. You may be tasked at any time to airlift nuclear weapons. The amount of preparation time and degree of assistance you receive will depend on the length of time the MAJCOM has to move the weapons.

21.2. Conduct of Operations. Crews should be briefed and receive detailed instructions from a specific OPLAN or mission directive. If there is a conflict between this instruction and the requirements in an OPLAN or mission directive, use the OPLAN or mission directive.

21.3. Emergency Nuclear Airlift Standards. Crews are expected to use sound judgment and common sense in what may be a turbulent or tense environment. Pay particular attention to the following areas:

21.3.1. Nuclear weapons must be handled safely. The most immediate hazard is the high explosive that can be set off by shock or heat in most nuclear weapons. Keep loading operations controlled and orderly at all times. Load or handle only one item or pallet at a time. Shipper and receiver personnel are highly trained in nuclear cargo movements and should be used to assist in cargo loading operations and tie down. The overall aircraft loading responsibility belongs to the aircrew.

21.3.2. Use specific loading procedures outlined in TO 1C-130A-9, Section 6.

21.3.2.1. For mixed loads (more than one type of weapon), base the load plan on how many weapons can be properly restrained using TO 1C-130A-9 criteria. Do not allow weapons to rub or touch each other when tied down.

21.3.3. The route of flight must not violate restrictions in the classified United States Air Force Special Weapons Over-flight Guide (SWOG). Over-flight of a foreign country with nuclear weapons is an extremely sensitive issue. Comply with SWOG instructions at all times. Crews without access to the SWOG, will request a route of flight that complies with the SWOG through command and control center (C2 agency) channels, 618 AOC/XOCG, DSN 779-0323. The C2 agency must ensure the route of flight is provided to the aircrew by the most expeditious means available. If no route of flight is provided, fly normal ATC routings to the destination. Do not divulge the nature of cargo to any enroute ATC facility or country to obtain a specific clearance.

21.4. Aircrew Selection. All active duty aircrews (except 374 AW) may be used for Emergency Nuclear Airlift Operations (ENAO).

21.5. Aircrew Requirements.

21.5.1. Crew complement will be according to the OPLAN or specific mission directive. If not specified, use a normal crew complement.

21.5.2. The crew will be armed (courier and two additional crewmembers).

21.5.3. Crewmembers tasked for a mission that has a higher security classification than their personnel security clearance will be authorized emergency access to enough information to

complete the mission. Approval authority rests with a general officer, wing commander, or wing commander equivalent and cannot be delegated.

21.6. Aircrew Briefings.

21.6.1. A controlling agency or delegated representative will conduct a predeparture or enroute briefing for aircrew members prior to executing an active leg of ENAO. The controlling agency can pass classified mission information to the crew through the Shipping Agency. The aircraft commander will brief anyone who joins the mission enroute. Aircrews should be briefed on the following:

21.6.1.1. Purpose of the mission.

21.6.1.2. Classification of the mission, cargo, and locations.

21.6.1.3. Itinerary, including confirmation of prior coordination for hazardous material as required by IFR supplement and alternate airfields.

21.6.1.4. Cargo. TO 11N-20-11 (C), *Gerneral Firefighting Guidance* line numbers should be included. Obtain line numbers from the fire department or the controlling agency prior to loading. TO 11N-20-11 (C) is a classified technical order that assigns an unclassified line number to each nuclear weapon.

21.6.1.4.1. Restrictions on transporting additional general cargo or passengers.

21.6.1.5. "No lone zone," two-person concept, and security requirements.

21.6.1.6. Personnel authorized to sign for nuclear weapons at the destination.

21.6.1.7. Current intelligence, including threat analysis.

21.6.1.8. SWOG route of flight restrictions.

21.6.1.9. Airborne intercept (SWOG).

21.6.1.10. Jettisoning (SWOG).

21.6.1.11. Command Disable System (CDS) procedures.

21.6.1.12. The PIC will ensure emergency procedures in **paragraph 21.10** below are briefed

21.6.1.13. ORM risks/levels/mitigating factors for the mission.

21.7. Enroute Procedures. Use these procedures in addition to the normal operating procedures in the rest of this regulation.

21.7.1. Flight Plans. Enter "hazardous cargo" and the mission number in the "other information" section of the flight plan. Crews carrying inert weapons, trainers, or other items that could be mistaken for real weapons by crash or rescue personnel in an emergency will enter "inert devices."

21.7.2. Radio Calls:

21.7.2.1. Departure (on-load) base. Before starting the on-load, tell the tower to notify the fire department the "on-load is commencing." Prior to engine start, give the controlling agency (ground or tower) the parking location and approximate engine start

time and announce there is hazardous cargo aboard the aircraft. Ensure a fire truck is standing by the aircraft for engine start.

21.7.2.2. Enroute or offload base. At least 30 minutes prior to landing, contact one of the following: command post, base operations, or control tower. Pass mission number and verify that the hazardous cargo information has been received. If the arrival base does not have hazardous cargo information, request the following be relayed immediately to the crash or fire protection agency and other support agencies as appropriate:

21.7.2.2.1. Aircraft call sign, type, and mission number.

21.7.2.2.2. ETA.

21.7.2.2.3. Department of Transportation (DOT) explosives hazard class or division (normally 1.1).

21.7.2.2.4. Net explosive weight (NEW).

21.7.2.2.5. Line numbers from TO 11N-20-11 (C) if requested. Obtain line numbers from the base fire department prior to starting the load at the on-load location.

21.7.2.2.6. A request for isolated parking and security forces to meet the aircraft.

21.8. Custody of Nuclear Cargo. United States military custody of nuclear weapons is required. The courier officer is responsible for receipt, custody, security, safety, and delivery of nuclear weapons to authorize receivers. The courier must be a commissioned officer. A copilot or navigator is the preferred option. Under certain conditions, the shipper may furnish United States military couriers who will retain custody of the weapons in-flight.

21.8.1. Prior to accepting and loading nuclear cargo, the shipper will brief the courier officer on the nature and hazards of the cargo. The courier will brief all crewmembers who didn't receive the shipper's briefing prior to flight. Ask the shipper to point out any specifics crews may need to handle the weapon, i.e. tiedown points, forklift stirrups, CDS procedures, etc.

21.8.2. Time permitting, the courier and LM will inspect the cargo before accepting custody. The courier should have the shipper verify the integrity of a weapons case and replace any broken seals. Crews may be held responsible for damage at the receiving end if crews accept a damaged weapon without documentation. Document damage or broken seals on the DD 1911, *Materiel Courier Receipt*, prior to signing for the weapon.

21.8.2.1. Loadmasters will inspect weapons to ensure they are secured to carriers, conditions of tiedown rings, and condition of wheel casters etc.

21.8.3. The courier accepts custody of the weapon by signing the DD 1911 provided by the shipper. Use this form to transfer cargo custody to replacement couriers.

21.8.4. Release custody of the cargo only to a replacement courier or someone authorized to sign for nuclear material. Authorized receivers are identified by the shipper, by message, or through the AMC command and control system.

21.8.5. Time permitting, refer any questions through the 618 AOC (TACC) Command Center to 618 AOC/XOCG, DSN 779-0323 for resolution.

21.9. Security Procedures. The host base is responsible for providing security for the aircraft and the nuclear cargo. The courier officer (who has custody of the weapons) is the final authority

on security matters; however, crews should follow the advice and procedures of the host security force as much as possible. If the situation is serious and crews must load and depart quickly, use judgment and dispense with the formalities. Prior to takeoff, the PIC will ensure security support at all stations being transited that day through the 618 TACC or theater C2 agency Command Center.

21.9.1. Home Station. Conduct a thorough visual search of the aircraft for unauthorized explosives or stowaways. Use a bomb detection dog if available. If time is critical, do not delay the mission to "sanitize" the aircraft.

21.9.2. On-load Base. The host base should set up a restricted area, normally with ropes and stanchions, around the aircraft.

21.9.2.1. Entry Control. Use one entry point to maintain strict control of entry into the area. The entry controller will have a roster of all personnel allowed to enter. Use a copy of the flight orders for the aircrew. Instruct the entry controller to coordinate with the aircrew courier before allowing anyone into the area. **EXCEPTION:** Allow the weapons convoy to enter the restricted area without delay.

21.9.2.2. "No lone zone." Do not allow anyone to be alone in the restricted area or aircraft when nuclear weapons are present (inside either the area or the aircraft). The purpose of a "no lone zone" is to prevent any one person from tampering with a nuclear weapon. The easiest way to enforce a "no lone zone" is to always be in pairs inside the restricted area (for example, two aircrew members, two shippers, or one aircrew member and one shipper). Maintain the two person concept throughout the flight. Do not allow anyone to be alone in the cargo compartment or flight deck.

21.9.3. If security forces do not meet the aircraft, the aircraft commander must be prepared for an immediate departure until security is established. Immediately upon block-in, the courier and security team will deplane. The aircrew will keep the aircraft engines running, all aircraft doors closed and delay preparation for nuclear cargo transfer until the courier verifies appropriate security is in place. CDS codes (if issued) must remain onboard the aircraft (normally with the copilot) until custody is transferred to the receiving authority. Once security is established, the only personnel authorized near the aircraft are aircrew members and those support personnel necessary to install landing gear pins, ground power and wheel chocks. Monitor these people at all time.

21.10. Emergency Procedures.

21.10.1. Security Emergencies. Crews may use deadly force to protect nuclear cargo and will resist any attempt by a hostile force to capture a nuclear weapon. Consider any attack on an aircraft loaded with nuclear cargo, including a hijacking attempt, as an attack against the nuclear weapons. Should hostages be used to gain access to, as cover for removal, or to thwart recovery of a nuclear weapon; the welfare and safety of the hostages should be considered in determining actions to be taken. However, the presence of hostages shall not deter the taking of decisive, prompt, and effective action that includes the use of deadly force to recover a nuclear weapon and to prevent unauthorized access to or removal of a nuclear weapon. If crews are attacked, take the following actions:

21.10.1.1. Make an immediate takeoff, with the cargo if possible.

21.10.1.2. If the attack occurs during on-loading or off-loading, load the weapons as fast and as safely as possible; ensure sufficient cargo restraint and takeoff immediately.

21.10.1.3. Some weapons are equipped with a CDS that internally destroys the capability of a weapon to achieve a significant nuclear yield. The CDS will be used when capture of a weapon is imminent.

21.10.1.4. Aircrews will not use emergency destruct procedures on nuclear weapons. Emergency Destruction (ED) of weapons by shaped charges requires SECDEF approval and will be accomplished by qualified personnel who have the capability to receive, authenticate, and carry out ED orders. When two properly identified shipper or receiver personnel concurrently request custody of the cargo for ED purposes, release the cargo using appropriate custody transfer procedures.

21.10.2. Jettisoning Nuclear Cargo. The LM will identify which cargo is jettisonable IAW TO 1C-130xx-1. The PIC bears a moral obligation to jettison cargo or crash-land where the least amount of damage will result. Use the CDS, if applicable, prior to jettisoning or crash-landing. Record the coordinates of each jettisoned item. Observe the jettison restrictions in the SWOG.

21.10.3. Landing in Foreign Countries. Be prudent and keep things very low key. If confronted with demands to board or inspect the aircraft, refer to the status of US military aircraft in DOD 4500.54G FCG which states: US military aircraft are sovereign instrumentalities. US military aircraft cleared to overfly or land in a foreign territory are entitled to the privileges and immunities customarily accorded to warships. These privileges and immunities include, in the absence of stipulations to the contrary, exemption from duties and taxation; immunity from search, seizure, and inspections (including customs and safety inspection); or other exercise or jurisdiction by the host nation over the aircraft, personnel, equipment, or cargo on board. Air Force PICs will not authorize search, seizure, inspection, or similar exercises of jurisdiction enumerated above by foreign authorities except by direction of HQ USAF or the American Embassy in the country concerned. Diplomatically, but firmly, refuse any requests to board or inspect, and get help through any available United States channel. Flash priority is authorized.

21.11. Maintenance and Servicing on Aircraft Loaded with Nuclear Cargo.

21.11.1. Maintenance on an aircraft loaded with nuclear weapons must not violate safety rules normally used with aircraft loaded with conventional explosives. As much as possible, have maintenance and servicing completed before loading nuclear weapons on the aircraft. Do not allow maintenance, such as the following, that could increase the possibility of a fire:

21.11.1.1. Using flame or uncontrolled heat-producing items.

21.11.1.2. Repairs on the fuel system, cell, and tank or other maintenance where significant fuel spills are likely to result from disconnected lines, ruptured components, etc.

21.11.2. Aircraft will not be jacked. The temporary lifting of one set of landing gear "integral jacking" for minor maintenance (tire change, brake change, bogie maintenance, etc.) is not considered aircraft jacking.

21.11.3. Have a fire truck standing by at the aircraft during refueling, defueling, or oxygen servicing. Do not refuel, defuel, integral jack, or service oxygen while loading or offloading nuclear weapons.

21.11.4. The flight engineer or crew chief will monitor all maintenance on the aircraft while nuclear cargo is on board.

21.12. Emergency Nuclear Airlift Operations Guide. This guide describes recommended actions for courier and crew during emergency nuclear airlift operations. It is designed for those missions diverted enroute to an on-load site where the crew does not have the opportunity to receive a formal CRG, home station, or command post briefing. However, even if a formal briefing is given, this guide may be used as a refresher. Security, time, and ground support may not be sufficient to allow using this guide during emergency operations. In such cases, the courier and crew must discuss all factors and use their judgment on the best course of action to accomplish the mission. Safety and security is paramount in all decisions affecting transportation of nuclear cargo.

21.13. Prior to On-load. Accomplish the following, either at home station or enroute to the on-load site:

21.13.1. Review crew responsibilities and the procedures to be used during on-load (loading method, security setup, cargo receipt, two-person concept). Do not discuss classified information over inter-phone.

21.13.2. Enroute and 30 minutes prior to landing, contact the on-load site and notify them of ETA. Make support requirements known (fuel, MHE, transportation, security, etc.) at this time.

21.13.3. If time permits and the equipment is readily available, install the Combat Track II system.

21.14. Arrival and On-load.

21.14.1. Contact the senior security official and comply with the following: If crews have nuclear cargo on board, establish a restricted area and keep everyone off the aircraft. Provide armed security until the host security forces assume responsibility.

21.14.1.1. A restricted area will be established around the aircraft. Ropes and stanchions are normally used to denote the restricted area. However, depending on the situation, crews may see additional guards, security vehicles, etc., rather than ropes. Be flexible. The key is whether the host base is furnishing enough security to protect the nuclear cargo.

21.14.1.2. A single entry control point will be established.

21.14.2. The entry controller must allow only those individuals into the restricted area who have been cleared by the courier. Tell the entry controller which individuals are authorized into the area and, time permitting, use crew orders as an EAL and prepared shipper lists.

21.14.3. After security is established, verify shipper identification and accomplish the following with the shipper:

21.14.3.1. Shipper briefing to include the following:

21.14.3.1.1. Nature, hazard, and safety regarding shipment of nuclear weapons cargo, including line numbers from TO 11N-20-11 (C), DOD class explosive hazard class or division, and net explosive weight (NEW).

21.14.3.1.2. Courier escort requirements.

21.14.3.1.3. Items requiring the two-person concept.

21.14.3.1.4. Items that are CDS equipped and if the CDS has been activated (weapon not operational).

21.14.3.1.5. Items exposed to an abnormal environment or not operational.

21.14.3.1.6. Special handling or unique requirements particular to the cargo.

21.14.3.1.7. Individuals required to assist during on-load or off-load. Pass the information to the entry controller.

21.14.3.1.8. Authorized recipients at offload station. Get this information in writing.

21.14.3.2. Cargo inspection:

21.14.3.2.1. The primary LM, courier, and shipper will inspect the cargo for broken seals, exterior damage, security to carrier, wheel and casters, tiedown points, etc. Have the shipper annotate any discovered damage or discrepancies on the DD 1911. **NOTE:** Ensure the aircraft is ready for on-load prior to accepting custody of nuclear cargo.

21.14.3.2.2. After the inspection, accept custody of the cargo by signing the DD 1911.

21.14.4. During on-load or off-load monitor the operation, assist as necessary, and ensure personnel comply with the two-person concept.

21.14.5. After cargo on-load is complete and the crew is ready for engine start, the armed courier will deplane and tell the host base security to break down security and maintain surveillance until aircraft departure. The courier and other armed crewmembers will monitor access to the aircraft and crew entrance door during engine start.

21.15. Enroute to Offload.

21.15.1. Maintain the two-person concept.

21.15.2. Notify the 618 AOC (TACC) or theater C2 agency Command Center of departure time and ETA at the offload station. Be prepared to encode this information.

21.15.3. If time permits, review the security and handling procedures to be used at the offload station. Do not discuss classified information over the interphone.

21.15.4. Contact the agency specified in flight information publications (command post, base operations, or tower) 30 minutes prior to landing; ask if they have hazardous cargo information. If they don't, pass the following information:

21.15.4.1. Call sign, type aircraft, and mission number.

21.15.4.2. ETA.

21.15.4.3. Line numbers from TO 11N-20-11 (C) or DD 1911.

21.15.4.4. If line numbers were not provided, pass on the following information:

21.15.4.4.1. DOD explosive hazard class or division (normally 1.1).

21.15.4.4.2. NEW.

21.15.4.5. A request for isolated parking and for their security forces to meet the aircraft.

21.15.4.6. Inert devices, if applicable.

21.16. Off-load.

21.16.1. If security forces do not meet the aircraft, the aircraft commander must be prepared for an immediate departure until security is established. Immediately upon block-in, the courier and security team will deplane. The aircrew will keep the aircraft engines running, all aircraft doors closed and delay preparation for nuclear cargo transfer until the courier verifies appropriate security is in place.

21.16.2. Maintain the two-person concept.

21.16.3. Brief the receiver on the cargo, and transfer custody.

21.16.4. Briefing includes:

21.16.4.1. Nature, hazard, and safety regarding shipment of the nuclear weapon cargo, including line numbers from TO 11N-20-11 (C), DOT explosive hazard class or division, DOT class, and NEW.

21.16.4.2. Courier escort requirements.

21.16.4.3. Items requiring the two-person concept.

21.16.4.4. Items that are CDS-equipped and if the CDS has been activated (weapon not operational).

21.16.4.5. Items exposed to an abnormal environment or not operational.

21.16.4.6. Special handling or unique requirements applicable to the cargo.

21.16.4.7. Individuals required to assist during the offload. Pass this information to the entry controller.

21.16.5. The receiver and courier will conduct an inspection of the cargo for broken seals, exterior damage, etc. If discrepancies are found and they have not been previously noted, the courier will annotate them on the DD 1911.

21.16.6. Transfer custody of cargo. (Receiver signs DD 1911).

21.16.7. Complete offload of cargo.

HERBERT J. CARLISLE, Lt Gen, USAF
DCS, Operations, Plans and Requirements

(911AW)

CRAIG C. PETERS, Col, USAFR
Commander

Attachment 1

GLOSSARY OF REFERENCES AND SUPPORTING INFORMATION

References

AFH 11-203V1, *Weather for Aircrews*, 1 March 1997

(Added-911AW) AFI2C-130V3, C-130J Operations Procedures, 8 Dec 2009

AFI 10-206, *Operational Reporting*, 6 Sep 11

AFI 10-245, *Antiterrorism*, 30March 2009

AFI 10-707, *Spectrum Interference Resolution Program*, 20 June 2005

AFI 10-801, *Assistance to Civilian Law Enforcement Agencies*, 15 April 1994

AFI 11-200, *Aircrew Training, Standardization/Evaluation, and General Operations Structure*, 19 January 2012

AFI 11-202V3, *General Flight Rules*, 22 October 2010

AFI 11-209, *Aerial Events Policies and Procedures*, 4 May 2006

AFI 11-215, *USAF Flight Manuals Program (FMP)*, 22 December 2008

AFI 11-218, *Aircraft Operation and Movement on the Ground*, 11 May 2005

AFI 11-230, *Instrument Procedures*, 30 March 2010

AFI 11-231, *Computed Air Release Point Procedures*, 31 Aug 2005

AFI 11-235, *Forward Area Refueling Point (FARP) Operations*, 15 December 2000

AFI 11-299, *Nuclear Airlift Operations* (FOUO), 19 March 2008

AFI 11-2AEV3, *Aeromedical Evacuation (AE) Operations Procedures*, 18 May 2010

AFI 11-2C-130V1, *C-130 Aircrew Training*, 30 April 2010

AFI 11-301V1, *Aircrew Flight Equipment (AFE) Program*, 25 February 2009

AFI 11-401, *Aviation Management*, 10 December 2010

AFI 11-409, *High Altitude Airdrop Mission Support Program*, 1 Dec 1999

AFI 13-207, *Preventing and Resisting Aircraft Piracy (Hijacking)* (FOUO), 21 June 2010

AFI 13-217, *Drop Zone and Landing Zone Procedures*, 10 May 2007

AFI 14-105, *Unit Intelligence Mission and Responsibilities*, 3 June 2002

AFI 21-101, *Aerospace Equipment Maintenance Management*, 26 July 2010

AFI 31-101, *Integrated Defense* (FOUO), 8 October 2009

AFI 31-207, *Arming and Use of Force by Air Force Personnel*, 29 January 2009

AFI 31-401, *Information Security Program Management*, 1 November 2005

AFI 33-324, *The Information Collections and Reports Management Program: Controlling Internal, Public, and Interagency Air Force Information Collections*, 1 June 2000

AFI 33-360, *Publications and Forms Management*, 18 May 2006

AFI 36-2903, *Dress and Personal Appearance of Air Force Personnel*, 18 July 2011

AFI 41-307, *Aeromedical Evacuation Patient Considerations and Standards of Care*, 20 August 2003

AFI 91-202, *The US Air Force Mishap Prevention Program*, 5 August 2011

AFI 91-204, *Safety Investigations and Reports*, 24 September 2008

AFI 91-223, *Aviation Safety Investigations and Reports*, 6 July 2004

AFJI 13-210/AR59-4/OPNAVINST 4630.24D/MCO 13480.1D, *Joint Airdrop Inspection Records, Malfunction Investigations, and Activity Reporting*, 23 June 2009

AFJI 48-104/AR 40-12/SECNAVINST 6210.2A, *Quarantine Regulations of the Armed Forces*, 24 January 1992

AFMAN 10-2503, *Operations in a Chemical, Biological, Radiological, Nuclear, and High-Yield Explosive (CBRNE) Environment*, 7 July 2011

AFMAN 11-217V1, *Instrument Flight Procedures*, 22 October 2010

AFMAN 11-217V2, *Visual Flight Rules*, 22 October 2010

AFMAN 11-217V3, *Supplemental Flight Information*, 23 February 2009

AFMAN 24-204/TM 38-250/NAVSUP PUB 505/MCO P4030.19I/DLAI 4145.3, *Preparing Hazardous Materials for Military Air Shipments*, 1 September 2009

(Added-911AW) AFMAN33-363, Management of Records, 1 Mar 2008

AFPAM 10-100, *Airman's Manual*, 1 March 2009

AFPAM 11-216, *Air Navigation*, 1 March 2001

AFPAM 91-212, *Bird/Wildlife Aircraft Strike Hazard (BASH) Management Techniques*, 1 February 2004

AFPD 11-2, *Aircraft Rules and Procedures*, 14 January 2005

AFPD 90-9, *Operational Risk Management*, 1 April 2000

AFTTP 3-1.C-130 (S), *Tactical Employment—C-130*, 14 May 2010

AFTTP 3-3.C-130E/H, *Combat Aircraft Fundamentals—C-130E/H*, 14 May 2010

AFWA/TN 98/002, *Meteorological Techniques*, 13 June 2003

AMC Aircrew Border Clearance Guide, 1 January 2006

AMCH 11-214, *AMC Aircrew Hazardous Materials*, 20 April 2011

AMCI 11-208, *Tanker/Airlift Operations*, 1 June 2000

AMCI 11-214, *Air Operations Rules and Procedures*, 22 December 2005

AMCI 24-101V14, *Military Airlift Passenger Service*, 2 October 2009

AMCI 24-101V16, *Military Airlift – Border Clearance*, 14 May 2004

CJCS Guide 5260, *Service Member's Personal Protection Guide: A Self-Help Handbook to Combating TERRORISM*, 1 February 2008

CJCS Instruciton 3121.01B (S), *Standing Rules of Engagement for US Force*s, 13 June 2005

CJCS Instruction 3610.01A (C), *Aircraft Piracy (Hijacking) and Destruction of Derelict Airborne Objects* , 20 June 2006

DOD Manual 4140.25-M, VII, *DoD Management of Bulk Petroleum Products, Natural Gas, and Coal*, 26 February 2009

DOD 4500.9-R, *Defense Transportation Regulation Part III, Mobility*, July 2011, *authorized by* DOD Directive 5158.04, 27 July 2007

DOD 4500.54-G, *Foreign Clearance Guide*, current edition

DOD 4515.13R, *Air Transportation Eligibility*, 1 November 1994

DOD FLIP, *General Planning*, current edition

DOD FLIP, *Flight Information Handbook*, current edition

DOD FLIP AP/1B, *Area Planning North and South America*, current edition

DOD FLIP AP/2, *Area Planning Europe-Africa-Middle East*, current edition

Joint Publication 1-02, *DOD Dictionary of Military and Associated Terms*, 8 November 2010

Title 14, Code of Federal Regulations (CFR), Part 1, *Aeronautics and Space*, current edition

TO 00-20-1; *Aerospace Equipment Maintenance Inspection, Documentation, Policies, and Prodedures;* 15 June 2011

TO 00-25-172, *Ground Servicing of Aircraft and Static Grounding/Bonding*, 10 February 2011

TO 1-1-300, *Functional Check Flights and Maintenance Operational Checks*, 14 November 2007

TO 1-1B-50, *Weight and Balance*, 1 April 2008

TO 1C-130-101, *Implementation of C-130 Series Aircraft Usage Report*, 15 April 2003

TO 1C-130A-9, *Cargo Loading Manual*, 7 December 2009

TO 1C-130xx-1, *C-130 Flight Manual*

TO 1C-130xx-1-1, *C-130 Performance Data*

TO 1C-130E-5, *Basic Weight Check Lists and Loading Datal*, 6 September 1999

TO 1C-130E(H)-6CF-1, *Acceptance and/or Functional Check Procedures Manual*, 31 December 2005

TO 11N-20-11 (C), *General Firefighting Guidance*, 20 February 2006

TO 13A1-1-1, *Repair, Cleaning, Inspection, and Testing of Aircraft Safety Belts, Shoulder Harness, and Miscellaneous Personnel Restraint Equipment*, 26 May 11

TO 13C7-1-11, *Airdrop of Supplies and Equip—Rigging Containers*, 2 September 2005

TO 13C7-51-21/ FM 10-542, *Airdrop Of Supplies and Equipment Rigging Loads For Special Operations*, 19 August 2007

TO 13C7-55-1/ FM 10-577, *Airdrop of Supplies and Equipment Rigging Military Utility Vehicles*, 10 September 2007

TO 42C-1-2, *Anti-Icing, De-Icing and Defrosting of Parked Aircraft*, 11 May 2007

Title 49 United States Code Section 46501

Title 49 United States Code Section 44903(e)

Prescribed Forms

AF Form 4062, *C-130 Run-in/Drop Information Card*

AF Form 4116, *C-130 Navigator Flight Plan And Log*

AF Form 4125, *Range Control Chart (LRA)*

Adopted Forms

AF IMT 457, *USAF Hazard Report*

AF IMT 664, *Aircraft Fuels Documenting Log*

AF IMT 651, *Hazardous Air Traffic Report (HATR)*

AF IMT 711B, *USAF Mishap Report*

AF IMT 853, *Air Force Wildlife Strike Report*

AF IMT 1297, *Temporary Issue Receipt*

AF IMT 1631, *NATO Travel Orders*

AF IMT 4031, *Crew Resource Management (CRM) Assessment Sheet*

AF IMT 4051, *Low Level Flight Plan and Log*

AF IMT 4053, *INS Flight Plan and Log*

AF IMT 4063, *Pilot Information Card*

AF IMT 4064, *C-130 Takeoff and Landing Data Card*

AF IMT 4069, *Tiedown Equipment Checklist*

AF IMT 4075, *Aircraft Load Data Worksheet*

AF IMT 4096, *Airdrop/Tactical Airland/Air Refueling Mission Recap*

AF IMT 4108, *C-130 Fuel Log*

AF IMT 4125, *Range Control Chart (LRA)*

AF IMT 4128, *Fleet Service Checklist*

AF IMT 4327A, *Crew Flight (FA) Authorization*

AF Form 8, *Certificate of Aircrew Qualification*

AF Form 15, *United States Air Force Invoice*

AF Form 523, *USAF Authorization to Bear Firearms*

AF IMT 616, *Fund Cite Authorization*

AF Form 813, *Request for Environmental Impact Analysis*

AF Form 847, *Recommendation for Change of Publication*

AF Form 1042, *Medical Recommendations For Flying Or Special Operational Duty*

AF Form 1199, *Air Force Entry Control Card*

AF Form 1994, *Fuels Issue/Defuel Document*

AF Form 3211, *Customer Comments*

AF Form 3516, *Food Service Inventory Transfer Receipt*

AF Form 3858, *Aeromedical Evacuation Mission Offload Message*

AF Form 4076, *Aircraft Dash 21 Equipment Inventory*

(Added-911AW) AF847, Recommendation for change of publication, 22 Sep 2009

AFTO Form 46, Prepositioned Aircrew Flight Equipment

AFTO Form 781, *ARMS Aircrew/Mission Flight Data Document*

AFTO Form 781A, *Maintenance Discrepancy and Work Document*

AFTO Form 781H, *Aerospace Vehicle Flight Status and Maintenance*

AMC 70, *RUSH Baggage Manifest*

AMC Form 43, *AMC Transient Aircrew Comments*

AMC Form 54, *Aircraft Commander's Report on Services/Facilities*

AMC Forms 97, *AMC In-flight Emergency and Unusual Occurrence Worksheet*

AMC Form 148-1, *AMC - Boarding Pass/Ticket (top feed)*

AMC Form 148-2, *AMC - Boarding Pass/Ticket/Receipt (2 part carbon set)*

AMC Form 148G, *AMC - Boarding Pass/Ticket (side feed)*

AMC Form 196, *Aircraft Commander's Report on Crew Member*

CBP 6059B, *Customs Declaration Form*

CBP 7507, *General Declaration Outward/Inward*

DD 175, *Military Flight Plan, and Other Information*

DD Form 365-3, *Chart C, Basic Weight and Balance Record*

DD Form 365-4, *Weight and Balance Clearance Form F—Transport/Tactical*

DD 1351-2, *Travel Voucher or Sub Voucher*

DD 1351-2C, *Travel Voucher or Sub Voucher*

DD Form 1385, *Cargo Manifest*

DD1610, *Request and Authorization for TDY Travel of DOD Personnel*

DD Form 1748, *Joint Air Drop Inspection Records*

DD1748-2, *Airdrop Malfunction Report*

DD 1801, *International Flight Plan, DOD*

DD 1854, *Customs Accompanied Baggage*

DD1896, *DOD Fuel Identaplate*

DD1898, *Fuel Sale Slip*

DD1907, *Signature and Tally Record*

DD 1911, *Materiel Courier Receipt*

DD Form 2130-2, *C-130E/H Cargo Manifest*

DD 2131, *Cargo/Passenger Manifest*

DD Form 2133, *Joint Airlift Inspection Record*

DD 2766, *Adult Preventive and Chronic Care Flowsheet*

I-94, *Immigration Form, Arrival/Departure Record*

SF 44, *Purchase Order - Invoice Voucher (Storage Safeguard Form)*

Abbreviations and Acronyms

ACBRN—Aircrew Chemical, Biological, Radiological & Nuclear

AC—Aircraft Commander; Alternating Current

ACCA—Aircrew Contamination Control Area

ACE—Aircrew Chemical Ensemble

ACF—Acceptance Check Flight

ACFP—Advanced Computer Flight Plan

ADI—Attitude Director Indicator

ADF—Automatic Direction Finder

ADIZ—Air Defense Identification Zone

ADE—Airdrop Damage Estimate

ADS—Aerial Delivery System

AE—Aeromedical Evacuation

AECM—Aeromedical Evacuation Crew Member

AERP—Aircrew Eye/Respiratory Protection

AETC—Air Education and Training Command

AFCS—Automatic Flight Control System

AFE—Aircrew Flight Equipment

AFFSA—Air Force Flight Standards Agency

AFI—Air Force Instruction

AFPD—Air Force Policy Directive

AFRC—Air Force Reserve Command

AFMAN—Air Force Manual

AFMC—Air Force Materiel Command

AFTO—Air Force Technical Order

AFTTP—Air Force Tactics, Techniques, and Procedures

AFWA—Air Force Weather Agency

AGE—Aerospace Ground Equipment

AGL—Above Ground Level

AGU—Autonomous Guidance Units

AHAS—Avian Hazard Advisory System

AIR—Aviation Into-Plane Reimbursement

AIREP—Air Report

ALCE—Airlift Control Elements

ALE—Automated Link Establishment

ALS—Approach Lighting System

ALTRV—Altitude Reservation

ALZ—Assault Landing Zone

AMC—Air Mobility Command

AMCC—Air Mobility Control Center

AMD—Air Mobility Division

AMT—Air Movement Table

ANG—Air National Guard

AOC—Air and Space Operations Center

AOR—Area of Responsibility

AP—Area Planning (FLIP)

APCC—Aerial Port Control Center

APOD—Aerial Port of Disembarkation

APU—Auxiliary Power Unit

AR—Air Refueling

ARA—Airborne Radar Approach

ARC—Air Reserve Component

ARINC—Aeronautical Radio, Incorporated

ARMS—Aeromedical Readiness Missions

ARTCC—Air Route Traffic Control Center

ASAP—Aviation Safety Action Program

ASR—Auto Start Relay

ASRR—Airfield Suitability and Restrictions Report

ATA—Actual Time of Arrival

ATC—Air Traffic Control

ATIS—Automated Terminal Information Service

ATM—Air Turbine Motor

ATO—Air Tasking Order

ATOC—Air Terminal Operations Center

ATTLA—Air Transportability Test Loading Agency

AUX—Auxiliary

AVPOL—Aviation Petroleum/Oils/Lubricants

AWADS—Adverse Weather Aerial Delivery System

AWE—Aircraft, Weapons and Electronics

BAK—Barrier Arrestor Kit

BAM—Bird Avoidance Model

BASH—Bird/Wildlife Aircraft Strike Hazard

BDHI—Bearing Distance Heading Indicator

BLOS—Beyond Line of Sight

BRNAV—Basic Area Navigation

BSU—Bus Switching Unit

BWA—Biological Warfare Agent

C2—Command and Control

CA—Controlling Authority

CARA—Combined Altitude Radar Altimeter

CARP—Computed Air Release Point

CAS—Calibrated Airspeed

CB—Chemical and Biological; Center of Balance

CBRN—Chemical, Biological, Radiological, and Nuclear

CCA—Contamination Control Area

CCT—Combat Control Team

CDS—Container Delivery System; Command Disable System

CDT—Crew Duty Time

CE—Circular Error

CECR—Crew Enhancement Crew Rest

CFL—Critical Field Length

CFP—Computer Flight Plan

CFR—Crash Fire Rescue

CG—Center of Gravity

CHOP—Change Operational Control

CHUM—Chart Updating Manual

CIRVIS—Communications Instructions Reporting Vital Intelligence Sightings

CM—Countermeasures

CMT—Charge Medical Technician

CNDC—Canadian National Defense Contract

CODEL—Congressional Delegations

COMAFFOR—Commander Air Force Forces

COMSEC—Communications Security

CONOPS—Concept of Operations

CONUS—Continental United States

CP—Co-pilot (crew designator: FPC)

CRA—Country Risk Assessment

CRB—Container Ramp Bundle

CRE—Contingency Response Elements

CRG—Contingency Response Group

CRM—Crew Resource Management

CRRC—Combat Rubber Raiding Craft

CS—Concurrent Servicing

CSAR—Combat Search and Rescue

CTII—Combat Track II

CVR—Cockpit Voice Recorder; Centerline Vertical Restraint

CVAM—Office of the Assistant Vice Chief of Staff of the Air Force, Special Air Missions Division

CWA—Chemical Warfare Agent

DA—Decision Altitude

DAFIF—Digital Aeronautical Flight Information File

DAO—Defense Attaché Office

DC—Direct Current

DCS—Defense Courier Service; Decompression Sickness

DDO—Deputy Director of Operations

DER—Departure End of Runway

DESC—Defense Energy Support Center

DEV—Deviation

DFSC—Defense Fuel Supply Center

DGH—Desired Grid Heading

DH—Decision Height

DIRMOBFOR—Director of Mobility Forces

DMAAC—Defense Mapping Agency Aeronautical Center

DME—Distance Measuring Equipment

DNIF—Duties Not Including Flying

DO—Director of Operations

DOD—Department of Defense

DOT—Department of Transportation

DR—Dead Reckoning

DSN—Defense Switching Network

DTC—Distance to Climb

DTR—Defense Transportation Regulation

DV—Distinguished Visitor

DVST—Direct View Storage Tube

DZ—Drop Zone

E3—Electromagnetic Environmental Effects

EAL—Entry Authorization List

EAS—Equivalent Airspeed

ECGW—End of Cruise Gross Weight

ECHUM—Electronic Chart Update Manual

ED—Emergency Destruction; Engineering Disposition

EDP—Earliest Descent Point

EFI—Electronic Flight Instrument

EMI—Electromagnetic Interference

EMP—Electromagnetic Pulse

ENAME—Europe, North Africa and Middle East

ENAO—Emergency Nuclear Airlift Operations

EOD—Explosive Ordinance Disposal

EP—Evaluator Pilot

EPA—Evasion Plan of Action

EPJS—Extraction Parachute Jettison System

EPOS—Emergency Passenger Oxygen System

ERO—Engine Running Onload/Offload

ESA—Emergency Safe Altitude

ETA—Estimated Time of Arrival

ETB—Estimated Time in Blocks

ETD—Estimated Time of Departure

ETE—Estimated Time Enroute

ETIC—Estimated Time in Commission

ETP—Equal Time Point

EUCOM—U.S. European Command

EXT—External

EZ—Exchange Zone

FAA—Federal Aviation Administration

FAF—Final Approach Fix

FAR—Federal Aviation Regulation

FBI—Federal Bureau of Investigation

FCB—Flight Crew Bulletin

FCC—Federal Communications Commission

FCF—Functional Check Flight

FCG—Foreign Clearance Guide

FCI—Flight Command Indicator

FCIF—Flight Crew Information File

FDP—Flight Duty Period

FDR—Flight Data Recorder

FE—Flight Engineer

FHR—Fuel Holding Relay

FIH—Flight Information Handbook

FIR—Flight Information Region

FL—Flight Level

FLIP—Flight Information Publications

FM—Flight Manager

FN—Flight Nurse

FOB—Forward Operating Base

FOD—Foreign Object Damage

FOL—Forward Operating Location

FOM—Figure Of Merit

FOUO—For Official Use Only

FP—Flight Pilot

FPM—Feet Per Minute

FMS—Flight Management System

FRAG—Fragmentation Order

FS—Flight Station

FSO—Flight Safety Officer

FSS—Flight Service Station

FSAF—First Suitable Airfield

FSRT—Firm Scheduled Return Time

FTC—Fuel to Climb

FTU—Formal Training Unit

GCAS—Ground Collision Avoidance System

GCE—Ground Crew Ensemble

GCU—Generator Control Unit

GDSS—Global Decision Support System

GFE—Government Furnished Equipment

GFS—Glendale Filter System

GMRS—Ground Mark Release System

GMT—Greenwich Mean Time

GP—General Planning

GPS—Global Positioning System

GPS-RTS—Global Positioning System Retransmit System

GPWS—Ground Proximity Warning System

GRADS—Ground Radar Aerial Delivery System

GSA—General Service Administration

GSI—Glideslope Indicator

GTC—Gas Turbine Compressor

GTIMS—Graduate Training Integration Management System

GW—Gross Weight

HAA—Height Above Airport

HALO—High Altitude Low Opening

HAAMS—High Altitude Airdrop Mission Support

HARP—High Altitude Release Point

HATh—Height Above Threshold

HATR—Hazardous Air Traffic Report

HERK—Hostile Environment Repair Kit

HERP—Hostile Environment Repair Procedures

HF—High Frequency

HF-ALE—High Frequency Automatic Link Establishment

HH—Handheld

HQ—Headquarters

HSI—Horizontal Situation Indicator

IAF—Initial Approach Fix

IAP—Initial Approach Point

IAS—Indicated Airspeed

IAW—In Accordance With

IBS—Small Inflatable Boat

ICAO—International Civil Aviation Organization

ICS—Infant Car Seat

I-CDS—Improved Container Delivery System

IDCU—Integrated Display Computer Unit

IFF—Identification Friend or Foe

IFM—Integrated Flight Management

IFR—Instrument Flight Rules

ILS—Instrument Landing System

IMC—Instrument Meteorological Conditions

IMT—Integrated Management Tool

INOP—Inoperative

INS—Inertial Navigation System

INU—Inertial Navigation Unit

IOAT—Indicated Outside Air Temperature

IP—Initial Point; Instructor Pilot

IPE—Individual Protective Equipment

ISA—International Standard Atmospheric

JA/ATT—Joint Airborne/Air Transportability Training

JCS—Joint Chief of Staff

JFC—Joint Force Commander

JMD—Jumpmaster Directed

JOSAC—Joint Operational Support Airlift Center

JPADS—Joint Precision Airdrop System

JSAM—Joint Service Aircrew Mask

JSOC—Joint Special Operations Communications

KIAS—Knots Indicated Airspeed

LAR—Launch Acceptability Region

LCLA—Low Cost Low Altitude

LED—Light Emitting Diode

LG/CC—Logistics Group Commander

LH—Left Hand

LM—Loadmaster

LOP—Line of Position

LPU—Life Preserver Unit

LSAF—Last Suitable Airfield

LZ—Landing Zone

MAC—Minimum Altitude Capable

MAF—Mobility Air Forces

MAFFS—Modular Airborne Fire Fighting System

MAJCOM—Major Command

MAP—Missed Approach Point

MC—Mission Commander; Mission Contributing

MCD—Medical Crew Director

MDA—Minimum Descent Altitude

MDS—Mission Design Series

ME—Mission Essential

MEA—Minimum Enroute Altitude

MEFF—Maximum Endurance Fuel Flow

MEL—Minimum Equipment List

MEP—Mission Essential Personnel

MH—Magnetic Heading

MHE—Material Handling Equipment

MICAP—Mission Capable

MILGPS—Military Grade Global Positioning System

MISREPS—Mishap Reports

MLG—Main Landing Gear

MMD—Moving Map Display

MMO—Mission Mobility Observer

MNPS—Minimum Navigation Performance Specification

MOB—Main Operating Base

MOCA—Minimum Obstruction Clearance Altitude

MOPP—Mission Oriented Protective Posture

MPD—Mobility Pilot Development

MPI—Multiple Points of Impact

MPP—Most Probable Position

MR—Mission Ready

MSL—Mean Sea Level

MSA—Minimum Safe Altitude

MSE—Mission Support Equipment

MTOGW—Maximum Takeoff Gross Weight

MTR—Military Training Route

NACO—National Aeronautical Charting Office

NAF—Numbered Air Force

NAS—Naval Air Station

NATO—North Atlantic Treaty Organization

NAVAIDS—Navigation Aids

NDB—Non-Directional Beacon

NEW—Net Explosive Weight

NLT—Not Later Than

NM—Nautical Mile

NMR—Non-Mission Ready

NOTAM—Notices to Airmen

NSN—National Stock Number

NVG—Night Vision Goggles

NVIS—Night Vision Imaging System

OAP—Offset Aim Points

OAT—Outside Air Temperature

OB—Operating Base

OCONUS—Outside the Continental United States

OCF—Operational Check Flight

OCS—Obstacle Clearance Surface

OEI—One Engine Inoperative

OFDA—Operational Flying Duty Accumulation

OG/CC—Operations Group Commander

OI—Open Item

OPCON—Operational Control

OPORD—Operations Orders

OPLAN—Operations Plan

OPLOC—Operating Location

OPR—Office of Primary Responsibility

OPREP—Operational Report

ORM—Operational Risk Management

OSA—Operational Support Airlift

OSD—Office of the Secretary of Defense

OSI—Office of Special Investigation

OST—Off-Station Trainer

OWS—Operational Weather Squadron

PA—Public Address

PAA—Primary Assigned Aircraft

PACAF—Pacific Air Forces

PADS-MP——Precision Aeriral Delivery System Mission Planner

PAH—Primary Assigned Hours

PAR—Precision Approach Radar

PAPI—Precision Approach Path Indicator

PBE—Protective Breathing Equipment

PCM—Passenger Compartment Monitor

PDA—Personal Digital Assistant

PEX—Patriot Excalibur

PF—Pilot Flying

PFPS—Portable Flight Planning Software

PI—Point of Impact

PIC—Pilot in Command

PJ—Pararescue

PMCR—Post Mission Crew Rest

PMSV—Pilot to Metro Service

PM—Pilot Monitoring

PM FSS—Product Manager Force Sustainment Systems

PO—PADS Operator

POC—Point of Contact

POL—Petroleum/Oils/Lubricants

PPI—Plan Position Indicator

PRM—Precision Runway Monitor

PRP—Personnel Reliability Program

PT—Physiology Technician

PTLOX—Portable Therapeutic Liquid Oxygen

RA—Resolution Advisory

RAMPCO—Ramp Coordinator

RAMZ—Rigging Alternate Method Zodiac

RAS—Retriever Assist Strap

RCR—Runway Condition Reading; Reverse Current Relay

RDD—Radiation Dispersal Device

RF—Radio Frequency

RMDZ—Recovery Mission Duration Zeroization

RNAV—Area Navigation

RNP—Required Navigation Performance

ROC—Rate Of Climb

ROE—Rules of Engagement

RON—Remain Over Night

RPM—Revolutions Per Minute

RRFL—Required Ramp Fuel Load

RSC—Runway Surface Condition

RVR—Runway Visual Range

RVSM—Reduced Vertical Separation Minimum

SAAM—Special Assignment Airlift Mission

SAASM—Selective Availability Anti-Spoofing Module

SAM/CSM—Special Air Mission/Command Support Mission

SATB—Simulated Airdrop Training Bundle

SATCOM—Satellite Communications

SCNS—Self-Contained Navigation System

SDP—Special Departure Procedure

SECDEF—Secretary of Defense

SECOMP—Secure Enroute Communications Package

SERE—Survival Evasion Resistance Escape

SF—Standard Forms

SID—Standard Instrument Departure

SIF—Selective Identification Feature

SIGMET—Significant Meteorological Information

SII—Special Interest Item

SKE—Station Keeping Equipment

SPINS—Special Instructions

SPR—Single Point Refueling

SM—Statue Mile

SOWT—Special Operations Weather Team

SQ/CC—Squadron Commander

SSR—System Support Representative

STAR—Standard Terminal Arrival Routes

STT—Special Tactics Team

SWOG—Special Weapons Overflight Guide

TACAN—Tactical Air Navigation

TACC—Tanker Airlift Control Center

TAS—True Airspeed

TCAS—Traffic Collision and Avoidance System

TCN—Transportation Control Numbers

TDY—Temporary Duty

TERPS—Terminal Instrument Procedures

TFF—Terminal Fuel Flow

TFM—Tactical Formation Maneuvering

THRE—Threshold Elevation

TIT—Turbine Inlet Tempature

TO—Technical Order

TOA—Time of Arrival

TOAT—Total Outside Air Temperature

TOD—Top Of Descent

TOGW—Take Off Gross Weight

TOLD—Takeoff and Landing Data

TOT—Time Over Target

TPRS—Towed Parachutist Retrieval System

TR—Transformer Rectifier

TTC—Time to Climb

TTP—Tactics, Techniques and Procedures

TWCF—Transportation Working Capital Fund

TWG—Threat Working Group

TWS—Track While Scan

UAB—Underwater Acoustical Locator Beacon

UE—Unit Equipped

UHF—Ultra High Frequency

UHF-DRS——Ultra High Frequency Dropsonde Receiver Subsystem

UMD—Unit Manning Document

USAFE—United States Air Forces Europe

USTRANSCOM—United States Transportation Command

UV—Ultra-Violet

VASI—Vertical Approach Slope Indicator

VDP—Vertical Descent Point

VFR—Visual Flight Rules

VHF—Very High Frequency

VIPSAM—Very Important Person Special Air Mission

VIRS—Verbal Initiated Release System

VMC—Visual Meteorological Conditions

VOR—VHF Omni-directional Range

VRA—Virtual Risk Assessment

VVM—Verbalize, Verify and Monitor

VVI—Vertical Velocity Indicator

VSI—Vertical Speed Indicator

VVIP—Very, Very Important Part

WG/CC—Wing Commander

WHMO—White House Military Office

WRF—Wing Relieving Fuel

WX—Weather

XTRK—Cross-track

ZM—Zone Marker

Terms

Terms—The following is a list of common mobility terms and associated abbreviation. Additional terms common to the aviation community may also be found in FAR, Part 1 and DOD FLIP General Flight Planning, Chapter 2.

618th AOC Tanker Airlift Control Center (618 AOC (TACC))—The 618 AOC (TACC) reports to the 18th Air Force and is the global air operations center responsible for centralized command and control of Air Force and commercial air mobility assets. Plans, schedules and tracks tanker, airlift, and aeromedical evacuation aircraft worldwide to efficiently and effectively accomplish Air Mobility Command's Global Reach mission. The 618 (AOC) TACC provides aircrews with mission details, support, training and authority necessary to successfully execute their mission.

Advanced Computer Flight Plan (ACFP)—An Air Force-level system that is used by Flight Managers to plan the fuel and flight plan for managed sorties. The program has current aircraft models and weather feeds to produce an accurate flight plan.

Aeromedical Evacuation (AE)—Fixed-wing movement of patients requiring supervision by aeromedical evacuation crewmembers to locations offering appropriate levels of medical care.

Aeromedical Evacuation Crew Member (AECM)—Qualified Flight Nurses (FN), Aeromedical Evacuation Technicians (AET), performing AE crew duties.

Air Mobility Control Center (AMCC)—Provides global coordination of tanker and airlift for AMC and operationally reports to the 618 TACC. Functions as the AMC agency that manages and directs ground support activities and controls aircraft and aircrews operating AMC strategic missions through overseas locations.

Air Mobility Division (AMD)—One of five divisions of the AOC the AMD integrates and supports air mobility missions. They coordinate with the JFC, theater AMOCC (if established) and 618 TACC in planning, tasking and executing theater air mobility missions.

Air Reserve Component (ARC)—Refers to Air National Guard and AFRC forces, both Associate and Unit Equipped.

Air Route Traffic Control Center (ARTCC)—The principal facility exercising enroute control of aircraft operating under instrument flight rules within its area of jurisdiction. Approximately

26 such centers cover the United States and its possessions. Each has a communication capability to adjacent centers.

Air Traffic Control (ATC)—A service operated by appropriate authority to promote the safe, orderly and expeditious flow of air traffic.

Aircraft Commander (AC)—A qualified pilot graduate of an aircraft commander upgrade course or aircraft commander initial qualification training, certified by the squadron commander to act as pilot in command of an aircraft. Capable of holding the A-code.

Aircrew Chemical Defense Ensemble (ACDE)—Individually fitted aircrew unique chemical protective equipment for the sole purpose of protecting aircrew while flying into and out of a chemically contaminated environment.

Aircrew Eye/Respiratory Protection (AERP)—New generation individually sized aircrew chemical defense protective equipment system designed to protect aircrew from toxic chemical exposure to the head, neck, face, eyes, and respiratory tract.

Airfield Suitability and Restrictions Report (asrr)— The ASRR and GDSS Airfield Database (AFD) products provide guidance and policy for AMC organic aircraft operations at airfields worldwide by means of individual suitability assessments (Giant Reports). Per AFI 11-202V3, other MAJCOMS and services establish specific policy concerning applicability of the ASRR (and associated information) for their aircraft. The ASRR and AFD products are available to anyone with a GDSS account or on request from the HQ AMC Airfield Suitability office (AMC/A3AS) at: **Airfield.Helpdesk@us.af.mil.**

Airlift—Aircraft is considered to be performing airlift when manifested passengers or cargo are carried.

Allowable Cabin Load (ACL)—The maximum payload that can be carried on an individual sortie.

Assault Landing Zone (ALZ)—A paved or semiprepared (unpaved) airfield used to conduct operations in an airfield environment similar to forward operating locations. ALZ runways are typically shorter and narrower than standard runways.

Augmented Crew—Basic aircrew supplemented by additional qualified aircrew members to permit in-flight rest periods.

Aviation Into- Plane Reimbursement (AIR) Card—A credit card that can be used to purchase aviation fuels, related fuel supplies and ground services at commercial airports where no DOD or Canadian Into- Plane contract exists.

Bird/Wildlife Aircraft Strike Hazard (BASH)—An Air Force program designed to reduce the risk of bird/wildlife strikes.

Bird Watch Condition Low—Normal bird/wildlife activity [as a guide, fewer than 5 large birds (waterfowl, raptors, gulls, etc.) or fewer than 15 small birds (terns, swallows, etc)] on and above the airfield with a low probability of hazard. Keep in mind a single bird in a critical location may elevate the Bird Watch Condition (BWC) to moderate or severe.

Bird Watch Condition Moderate—Increased bird population (approximately 5 to 15 large birds or 15 to 30 small birds) in locations that represent an increased potential for strike. Keep in mind a single bird in a critical location may elevate the BWC to moderate or severe.

Bird Watch Condition Severe—High bird population (as a guide, more than 15 large birds or 30 small birds) in locations that represent an increased potential for strike. A single bird in a critical location may cause a severe BWC.

Block Time—Time determined by the scheduling agency responsible for mission accomplishment for the aircraft to arrive at (block in) or depart from (block out) the parking spot.

BLUE BARK—US military personnel, US citizen civilian employees of the Department of Defense (DOD), and the dependents of both categories who travel in connection with the death of an immediate family member. It also applies to designated escorts for dependents of deceased military members. Furthermore, the term is used to designated property shipment of a deceased member.

Border Clearance—Those clearances and inspections required to comply with federal, state, and local agricultural, customs, immigration, and immunizations requirements.

Category I Route—Any route that does not meet the requirements of a category II route, including tactical navigation and overwater routes.

Category II Route—Any route on which the position of the aircraft can be accurately determined by the overhead crossing of a radio aid (NDB, VOR, TACAN) or intersection of at least two radio aid radials (VOR, TACAN) or one radial (VOR, TACAN) and one DME at least once each hour.

Chalk Number—Number given to a complete load and to the transporting carrier.

Charge Medical Technician (CMT)—A qualified AET who supervises other AETs in aircrew positions on an AE mission.

Circular Error Average (CEA)—Indicator of the accuracy of an airdrop operation. It is the radius of a circle within which half of the airdropped personnel and items or materiel have fallen.

Circular Error Record (Individual)—Maintained for all navigators who are airdrop qualified. See AFI 11-231.

COIN ASSIST—Nickname used to designate dependent spouses accompanying dependent children and dependent parents of military personnel reported missing or captured who may travel space available on military aircraft for humanitarian purposes on approval of the Chief of Staff, United States Army; Chief of Staff, United States Air Force; Chief of Naval Operations; or the Commandant of the Marine Corps.

Command and Control (C2)—The exercise of authority and direction by a properly designated commander over assigned and attached forces in the accomplishment of the mission. Command and control functions are performed through an arrangement of personnel, equipment, communications, facilities, and procedures employed by a commander in planning, directing, coordinating, and controlling forces and operations in the accomplishment of the mission.

Combat Control Team (CCT)—A small task organized team of Air Force parachute and combat diver qualified personnel trained and equipped to rapidly establish and control drop, landing, and extraction zone air traffic in austere or hostile conditions. They survey and establish terminal airheads as well as provide guidance to aircraft for airlift operations. They provide command and control, and conduct reconnaissance, surveillance, and survey assessments

of potential objective airfields or assault zones. They also can perform limited weather observations and removal of obstacles or unexploded ordinance with demolitions.

Command and Control Center (CC) (C2)—Each CC provides supervision, guidance, and control within its assigned area of responsibility. For the purpose of this AFI, CCs include operations centers, command posts, Air Mobility Division, tanker airlift control elements (CRG), air mobility control centers, and tanker task forces.

Command and Control Information Processing System (C2IPS)—Computer-based information transmission and information handling for command and control functions associated with the Director of Mobility Forces (DIRMOBFOR), AMD, wing operations center, and CRG. Interfaces to and automatically updates the Global Decision Support System (GDSS).

Computer ARA—An ARA flown on AWADS-equipped aircraft using AWADS procedures.

CONFERENCE SKYHOOK—Communication conference available to help aircrews solve in-flight problems that require additional expertise.

Contingency Fuel.—Contingency fuel is an identified extra to compensate for unforeseen circumstances during any phase of flight (i.e. unforcasted weather, launch delay, etc).

Contingency Mission—Mission operated in direct support of an OPORD, OPLAN, disaster, or emergency.

Contingency Response Group (CRG)—Team of qualified Air Force personnel established to control, coordinate, and function as an Air Force tanker and airlift C2 facility at a base where normal AMC C2 facilities are not established or require augmentation. CRGs support and control contingency operations on both a planned and no-notice basis.

Critical Phase Of Flight—Takeoff, low level (below MSA), airdrop, approach, and landing.

Deadhead Time—Duty time for crewmembers positioning or de-positioning for a mission or mission support function and not performing crew duties.

Depressurization Fuel.—The additional fuel required to protect the aircraft and occupants in the event of a cabin depressurization followed by an extended diversion to an alternate airport at low altitude where fuel consumption is increased.

Designated Courier—Officer or enlisted member in the grade of E-5 or above of the US Armed Forces, or a Department of State diplomatic courier, selected by the Defense Courier Service (DCS) to accept, safeguard, and deliver DCS material as directed. A primary aircrew member should be used as a courier only as a last resort.

Desolate Terrain Missions—Any mission in excess of one hour over desert, tropical, or jungle terrain (not to include flights conducted over the CONUS).

Deviation—A deviation occurs when takeoff time is not within -20/+14 minutes of scheduled takeoff time.

Direct Instructor Supervision—Supervision by an instructor of like specialty with immediate access to controls (for pilots, the instructor must occupy either the pilot or copilot seat).

Director, Mobility Forces (DIRMOBFOR)—Normally a senior officer who is familiar with the area of responsibility or joint operations area and possesses an extensive background in Air Mobility Operations. When established, the DIRMOBFOR serves as the designated agent for all

air mobility issues in the area of responsibility or joint operations area, and for other duties as directed. The DIRMOBFOR exercises coordinating authority between the AOC (or appropriate theater command and control node), the TACC, the Air Mobility Operations Control Center (when established and when supporting subordinate command objectives), and the Joint Movement Center, in order to expedite the resolution of air mobility issues. The DIRMOBFOR may be sourced from the theater's organizations or US Transportation Command. Additionally, the DIRMOBFOR, when designated, will ensure the effective integration of intertheater and intratheater air mobility operations, and facilitate the conduct of intratheater air mobility operations.

Distinguished Visitor (DV)—Passengers, including those of friendly nations, of star or flag rank or equivalent status to include diplomats, cabinet members, members of Congress, and other individuals designated by the DOD due to their mission or position (includes BLUE BARK and COIN ASSIST).

Diverse Departures—The airfield has been assessed for departure by TERPS personnel and no penetration of the obstacle surfaces exists. An aircraft may depart the field, climb to 400 feet above the departure end of the runway elevation, turn in any direction, and if a minimum climb gradient of 200’/NM is maintained be assured of obstacle clearance. This normally indicated on DOD publications by the absence of any published departure procedures.

Double Blocking—When an aircraft is required to block-in at one parking spot, then move to normal parking for final block-in. The extra time required for double blocking will be taken into account during mission planning/scheduling. To compensate for double blocking on departure, the aircrew "legal for alert time" may be adjusted to provide additional time from aircrew "show time" to departure. When double blocking is required on arrival, the aircrew’s entry into crew rest will be delayed until postflight duties are complete.

Drop Zone (DZ)—A specified area upon which airborne troops, equipment, or supplies are airdropped.

Due Regard—Operational situations that do not lend themselves to International Civil Aviation Organization (ICAO) flight procedures, such as military contingencies, classified missions, politically sensitive missions, or training activities. Flight under "Due Regard" obligates the military aircraft commander to be his or her own ATC agency and to separate his or her aircraft from all other air traffic. (See FLIP General Planning, section 7.)

DZ Entry Point—A fixed point on DZ run-in course where an aircraft or formation of aircraft may safely begin descent from IFR enroute altitude to IFR drop altitude. The DZ entry point is a maximum of 40 NM prior to the DZ exit point according to Federal Aviation Administration FAR exemption 4371C. Formation descent will not begin until the last aircraft in formation is at or past the DZ entry point.

DZ Exit Point—A fixed point on the DZ escape flight path centerline, established during pre-mission planning, at which the formation will be at the minimum IFR enroute altitude. Calculate the exit point based upon three-engine performance at airdrop gross weight. This point will be planned no less than four NMs track distance beyond the DZ trailing edge.

Earliest Descent Point (EDP)—Earliest point in the DZ run-in course where the lead aircraft may begin IFR descent to IFR drop altitude and be assured of terrain clearance for the entire formation. Compute EDP by subtracting formation length from the computed DZ entry point.

Equal Time Point (ETP)—Point along a route at which an aircraft may either proceed to destination or first suitable airport or return to departure base or last suitable airport in the same amount of time based on all engines operating.

Estimated Time In Commission (ETIC)—Estimated time required to complete required maintenance.

Execution—Command-level approval for initiation of a mission or portion thereof after due consideration of all pertinent factors. Execution authority is restricted to designated command authority.

Familiar Field—An airport in the local flying area at which unit assigned aircraft routinely perform transition training. Each operations group commander will designate familiar fields within their local flying area.

Firm Scheduled Return Time (FSRT)—Scheduling tool used by air mobility units to predict when crews will return to home station. FSRT for active duty, ANG, and AFRC is defined as SRT plus 24 hours.

First Suitable Airfield (FSAF)—The first suitable airfield available after completing the Category I route segment.

Fix—A position determined from terrestrial, electronic, or astronomical data.

Fuel Reserve—Amount of usable fuel that must be carried beyond that required to complete the flight as planned.

Global Decision Support System (GDSS)—AMC's primary execution command and control system. GDSS is used to manage the execution of AMC airlift and tanker missions.

Global Patient Movement Requirements Center (GPMRC)—A joint activity reporting directly to the Commander in Chief, US Transportation Command, the Department of Defense single manager for the regulation of movement of uniformed services patients. The Global Patient Movement Requirements Center authorizes transfers to medical treatment facilities of the Military Departments or the Department of Veterans Affairs and coordinates intertheater and inside continental United States patient movement requirements with the appropriate transportation component commands of US Transportation Command.

Ground Time—Interval between engine shut down (or arrival in the blocks if engine shutdown is not scheduled) and next takeoff time.

Hazardous Cargo or Materials (HAZMAT)—Articles or substances that are capable of posing significant risk to health, safety, or property when transported by air and classified as explosive (class 1), compressed gas (class 2), flammable liquid (class 3), flammable solid (class 4), oxidizer and organic peroxide (class 5), poison and infectious substances (class 6), radioactive material (class 7), corrosive material (class 8), or miscellaneous dangerous goods (class 9). Classes may be subdivided into divisions to further identify hazard (i.e., 1.1, 2.3, 6.1, etc.).

Improved Container Delivery System (ICDS)—Improved CDS bundles utilize a 26-foot ring slot high-velocity parachute and wind drop sondes dropped before the cargo drop to get a more accurate in-flight CARP. ICDS are usually dropped only from high altitudes.

In-Place Time (IPT)—Time when an aircraft and crew are at an operating base and prepared to load for the mission.

Instructor Supervision—Supervision by an instructor of like specialty (see also Direct Instructor Supervision).

Integrated Flight Management (IFM)—IFM is the set of integrated C2 processes and supporting technologies producing seamless planning and execution of air mobility sorties.

Interfly—The exchange and/or substitution of aircrews and aircraft between Mobility Air Forces (MAF) including crewmembers and/or aircraft from AETC, ACC, PACAF, USAFE and AMC-gained ANG and AFRC forces.

Joint Airborne/Air Transportability Training (JA/ATT)—Continuation and proficiency combat airlift training conducted in support of DOD agencies. Includes aircraft load training and service school support. HQ AMC publishes AMC headquarters publishes JA/ATT tasking in AMC OPORD 17-76, annex C, appendix 1.

Joint Precision Airdrop Delivery System (JPADS)—Joint Precision Airdrop Delivery System bundles/platforms are GPS—guided loads that use wind drop sondes before the cargo drop to get a more accurate in-flight CARP. JPADS are usually dropped only from high altitudes.

Jumpmaster—The assigned airborne-qualified individual who controls parachutists from the time they enter the aircraft until they exit. Jumpmasters and safeties are not considered passengers for the duration of the flight even after personnel airdrops are complete.

Knock-it-Off—Knock-it-Off is a command to cease all training activity and evaluate the ability to safely continue training. Any crew member may call to terminate a training maneuver. Upon hearing "knock-it-off" the crew should establish a safe attitude, altitude and airspeed and return the aircraft power and flight controls to a normal configuration. See AFFTP 3-3.C-130E/H.

Last Suitable Airfield (LSAF)—The last suitable airfield available before beginning the Category I route segment.

Latest Descent Point—Latest planned point on the DZ run-in course where the formation plans to initiate descent to drop altitude. This is planned to ensure all aircraft in the formation are stabilized (on altitude and airspeed) prior to the drop for the type drop the formation will perform.

Lead Crew—A crew consisting of a lead qualified aircraft commander and a lead qualified navigator.

Loading Time—In airlift operations, a specified time, established jointly by the airlift and airborne commanders concerned, when aircraft and loads are available and loading is to begin.

Local Training Mission—A mission scheduled to originate and terminate at home station (or an off-station training mission), generated for training or evaluation and executed at the local level.

Low Cost Low Altitude (LCLA)—Low cost/low altitude (LCLA) is a method to drop CDS bundles with improved accuracy and lower cost. Chute types range from disposable polypropylene parachutes to condemned personnel parachutes; the bundles are located on the ramp (either through drift-back or initial position) and manually cut by the LM at Green Light.

Maintenance Status—

A-1:—No maintenance required.

A-2 (Plus Noun):—Minor maintenance required, but not serious enough to cause delay. Add nouns that identify the affected units or systems, i.e. hydraulic, ultra high frequency (UHF) radio, radar, engine, fuel control, generator, boom or drogue, etc. Attempt to describe the nature of the system malfunction to the extent that appropriate maintenance personnel will be available to meet the aircraft. When possible, identify system as mission essential (ME) or mission contributing (MC).

A-3 (Plus Noun):—Major maintenance. Delay is anticipated. Affected units or systems are to be identified as in A-2 status above.

A-4:—Aircraft or system has suspected or known biological, chemical, or radiological contamination.

A-5:—Aircraft or system has suspected or known battle damage.

Manual gate cut.—A manual gate cut is defined as the loadmaster using a knife to physically cut/release the CDS/intermediate gates.

Medical Crew Director (MCD)—A qualified Flight Nurse (FN) responsible for supervising patient care and AECMs assigned to AE missions. On missions where an FN is not onboard, the senior AET will function as MCD.

Mission—Movement of aircraft from a designated point of origin to a designated destination as defined by assigned mission identifier, mission nickname, or both in the schedule, mission directive, OPORD, OPLAN, or FRAG order.

Mission Advisory—Message dispatched by C2 agencies, liaison officers, or aircraft commanders advising all interested agencies of any changes in status affecting the mission.

Mission Contributing (MC)—Any degraded component, system, or subsystem which is desired, but not essential to mission accomplishment.

Mission Essential (ME)—An degraded component, system, or subsystem which is essential for safe aircraft operation or mission completion.

Mission Essential Personnel (MEP)—personnel who are required for the execution of the aircraft or unit mission, to include follow-on missions. See AFI 11-401.

Mobility Air Force (MAF)—Forces assigned to mobility aircraft or MAJCOMs with operational or tactical control of mobility aircraft.

Modified Contour—Flight in reference to base altitude above the terrain with momentary deviations above and below the base altitude for terrain depressions and obstructions to permit a smooth flight profile.

Most Probable Position (MPP)—An MPP is a position determined with partial reference to a DR position and partial reference to all other fixing aids, weighing each one according to the navigator's judgment and experience.

Normal Cruise Fuel Flow (NCFF)—The fuel flow rate used when computing CAT I fuels reserves. It is derived from the fuel flow rate on your MDPT leg in CFPS.

Off Station Training Flight—A training flight that originates or terminates at other than home station that is specifically generated to provide the aircrew experience in operating away from

home station. Off station trainers will not be generated solely to transport passengers, cargo, or position/deposition crewmembers.

Operational Control (OPCON)—Transferable command authority that may be exercised by commanders at any echelon at or below the level of combatant command. Operational control is inherent in combatant command (command authority). Operational control may be delegated and is the authority to perform those functions of command over subordinate forces involving organizing and employing commands and forces, assigning tasks, designating objectives, and giving authoritative direction necessary to accomplish the mission. Operational control includes authoritative direction over all aspects of military operations and joint training necessary to accomplish missions assigned to the command. Operational control normally provides full authority to organize commands and forces and to employ those forces as the commander in operational control considers necessary to accomplish the assigned missions. Operational control does not, in and of itself, include authoritative direction for logistical matters of administration, discipline, internal organization, or unit training.

Operational Missions—Missions executed at or above 618 AOC (TACC) or theater C2 agency level. Operational missions termed "CLOSE WATCH" include CORONET missions and priority 1, 2, and 3 missions tasked by the 618 TACC or theater C2 agency. Other operational missions such as deployment, re-deployment, reconnaissance operations, operational readiness inspections (ORI), AMC-directed channel or SAAM, and JA/ATT missions may be designated "CLOSE WATCH" as necessary.

Operational Risk Management (ORM)—A logic-based, common sense approach to making calculated decisions on human, materiel, and environmental factors before, during, and after Air Force operations. It enables commanders, functional managers and supervisors to maximize operational capabilities while minimizing risks by applying a simple, systematic process appropriate for all personnel and Air Force functions.

Opportune Airlift—Transportation of personnel, cargo, or both aboard aircraft with no expenditure of additional flying hours to support the airlift.

Originating Station—Base from which an aircraft starts on an assigned mission. May or may not be the home station of the aircraft. When aircraft is under change of operational control, deployed location is the originating station.

Over-water Flight—Any flight that exceeds power off gliding distance from land.

Patient Movement Categories—

Urgent—Patients who must be moved immediately to save life, limb, or eyesight, or to prevent complication of a serious illness.

Priority—Patients requiring prompt medical care that must be moved within 24 hours.

Routine—Patients who should be picked up within 72 hours and moved on routine/scheduled flights.

Permit to Proceed—Aircraft not cleared at the first US port of entry may move to another US airport on a permit to proceed issued by customs officials at the first port of entry. This permit lists the requirements to be met at the next point of landing, i.e. number of crew and passengers, cargo not yet cleared. Aircraft commanders are responsible to deliver the permit to proceed to

the customs inspector at the base where final clearance is performed. (Heavy monetary fines can be imposed on the aircraft commander for not complying with permit to proceed procedures.)

PHOENIX RAVEN Security Teams—Supports mobility operations by providing security protection for aircraft transiting high threat locations where host, or enroute security support may be marginal, unreliable, or nonexistent. PHOENIX RAVEN Security teams consist of two to six US Air Force security force members, depending on security requirements.

Pilot In Command (PIC)—The aircraft commander, instructor pilot, or evaluator pilot designated on the flight authorization to act in command of a particular flight, or flights. Normally denoted by the A-code remark on the applicable flight authorization.

Point Of No Return—A point along an aircraft track beyond which its endurance will not permit return to its own or some other associated base on its own fuel supply.

Point of Safe Return—Most distant point along the planned route from which an aircraft may safely return to its point of departure or alternate airport with required fuel reserve.

Positioning and De-Positioning Missions—Positioning missions are performed to relocate aircraft for the purpose of conducting a mission. De-positioning missions are made to return aircraft from bases at which missions have terminated.

Ramp Coordinator—Designated representative of the C2 whose primary duty is the coordination of ground handling activities on the ramp during large scale operations.

Required Ramp Fuel Load (RRFL)—The minimum fuel required at engine start to complete the tasked mission.

Rush Baggage—Baggage or articles, which have been misrouted or separated from the owner, are to be forwarded as RUSH baggage.

Scheduled Return Date (SRD)—Scheduling tool used by air mobility units to predict when crews will return to home station. It allows force managers to plan aircrew availability and provide crews visibility over monthly flying activities. AMC and AMC-gained aircrews (except those on standby at home station) will have an SRT established on their flight orders.

Scheduled Takeoff Time—Takeoff time is established in the schedule or OPORD. For air aborts and diversions, this will be engine shut down time (or arrival in the blocks if engine shutdown is not scheduled) plus authorized ground time. Early deviation does not apply to aborts or diversions unless the mission is formally rescheduled by current operations.

Significant Meteorological Information (SIGMET)—Area weather advisory issued by an ICAO meteorological office relayed to and broadcast by the applicable ATC agency. SIGMET advisories are issued for tornadoes, lines of thunderstorms, embedded thunderstorms, large hail, severe and extreme turbulence, severe icing, and widespread dust or sand storms. SIGMETs frequently cover a large geographical area and vertical thickness. They are prepared for general aviation and may not consider aircraft type or capability.

Special Assignment Airlift Mission (SAAM)—Funded airlift that cannot be supported by channel missions because of the unusual nature, sensitivity, or urgency of the cargo, or that requires operations to points other than the established channel structure.

Special Tactics Team (STT)—A task-organized element of special tactics that may include combat control, pararescue, and special operations weather team (SOWT) personnel. Functions

include austere airfield and assault zone reconnaissance, surveillance, establishment, and terminal control; terminal attack control; combat search and rescue; combat casualty care and evacuation staging; and tactical weather observations and forecasting.

Stabilization Point—Point on the DZ run-in course at which the lead aircraft should plan to be stabilized at drop altitude and airspeed. Unless otherwise briefed, this point will be planned to be 6 NMs prior to the point of impact.

Stations Time (Air Force)—The time at which the crew, passengers, and cargo are to be on board and ready for the flight. Normally, 30 minutes prior to takeoff time. Aircrews will have completed their pre-flight duties and be at their crew positions. Passengers will be seated and cargo will be secured.

Tactical Event—Airdrop, low level, formation, assault landings/takeoffs, tactical approaches/departures, landings to an AMP 3 configured airfield at night.

Tanker Airlift Control Center (18 AF TACC)—The 18th Air Force direct reporting unit responsible for tasking and controlling operational missions for all activities involving forces supporting US Transportation Command's global air mobility mission. The 18 AF TACC contains the following functions: Command and Control, Current Operations, Mission Support, Logistics Operations Center, Aerial Port Control Center, Flight Planning, Diplomatic Clearance, Weather, and Mission Support Planning Office.

Tankered Fuel—Additional fuel carried through a primary destination for use on a subsequent leg.

Terminal Instrument Procedures (TERPS)—MAJCOM TERPS office ensures each published instrument procedure is operationally acceptable for the command or unit mission to include evaluation and endorsement of each nonstandard procedure.

Terminal Fuel Flow (TFF)—The fuel flow rate expected during the last hour at cruise altitude TFF is the fuel flow found on the last leg of a CFPS flight plan.

Theater Patient Movement Requirements Center (TPMRC)—The TPMRC is responsible for theater wide patient movement (e.g., medical regulating and AE scheduling), and coordinates with theater MTFs to allocate the proper treatment assets required to support its role. The primary role of the TPMRC is to devise theater plans and schedules and then monitor their execution in concert with the GPMRC. The TPMRC is responsible to the Combatant Commander through the Combatant Command Surgeon. The TPMRC is also responsible for all aspect of intratheater patient movement management. A TPMRC provides command and control for patient movement management operations in its theater of operations, as directed by its Combatant Commander's operational policy, and in coordination with USTRANSCOM, acting as a supporting combatant command, responsible for intertheater and CONUS.

Time Out— Common assertive statement used to voice crewmember concern when safety may be jeopardized. Used to cease maneuvering without affecting the overall mission/exercise. See AFFTP 3-3.C-130E/H.

Training Mission—Mission executed at the unit level for the sole purpose of aircrew training for upgrade or proficiency. Does not include operational missions as defined in this AFI.

Transition Event/Training—An approach, traffic pattern, or landing flown for the sole purpose of aircrew training or upgrade.

Transportation Working Capital Fund (TWCF)—Formerly known as Defense Business Operations Fund-Transportation (DBOF-T). TWCF is part of the Air Force Working Capital Fund (AFWCF). Normally, TWCF funds are used for costs that can be recovered from an air mobility customer. Examples include: TDY costs, site surveys of CRG or airlift unit deployment beddown locations, airlift unit level mission planning expenses, and support or contract costs for deployed TWCF units/personnel.

Unilateral—Operations confined to a single service.

Unit Move—A mission airlifting military passengers or troops who originate from the same unit and on-load point, are under the control of a designated troop commander and off-load at the same destination.

Wing Relieving Fuel (WRF)—Additional Fuel kept in the main tanks intended to counter wing bending moments.

Zero Fuel Weight—Weight, expressed in pounds, of a loaded aircraft not including wing and body tank fuel. All weight in excess of the maximum zero fuel weight will consist of usable fuel.