BY ORDER OF THE SECRETARY OF THE AIR FORCE

AIR FORCE INSTRUCTION 11-401

10 DECEMBER 2010

PACIFIC AIR FORCES COMMAND Supplement

18 JUNE 2013

35 FIGHTER WING Supplement

17 AUGUST 2015

Flying Operations

AVIATION MANAGEMENT

COMPLIANCE WITH THIS PUBLICATION IS MANDATORY

ACCESSIBILITY: Publications and forms are available for downloading or ordering on the Air Force e-Publishing website at **www.e-publishing.af.mil.**

RELEASABILITY: There are no releasability restrictions on this publication.

OPR: HQ USAF/A3O-AT — Certified by: HQ USAF/A3O-A (Col Jeffrey R. McDaniels)

Supersedes: AFI 11-401, 7 March 2007 — Pages: 153

(PACAF)

OPR: HQ PACAF/A3TC — Certified by: HQ PACAF/A3T (Col John F. Costa, Jr.)

Supersedes: AFI 11-401 PACAFSUP, 25 March 2010 — Pages:38

(35FW)

OPR: 35 OG/OGV — Certified by: 35 OG/CC (Col William D. Bowman)

Supersedes: 35 FWI 11-401, 16 May 2009 — Pages:10

This instruction implements AFPD 11-4, *Aviation Service*. It establishes procedures for managing Air Force flying resources and provides guidance that applies to administering aircrew flight management programs. It applies to all US Air Force flight managers, commanders of flying units, and aircrew personnel. This publication applies to Air Force Reserve Command, the Air National Guard, and to USAF aircrew personnel assigned to active flying positions in the Civil Air Patrol. Send comments and suggested improvements to this instruction on AF Form 847, *Recommendation for Change of Publication*, through channels to AF/A3O-AT. Major

commands (MAJCOMs), field operating agencies (FOAs), HQ USAF direct reporting units (DRUs), and subordinate organizations may supplement this instruction. Supplements cannot be less restrictive than the basic publication. MAJCOMs, FOAs, and DRUs will coordinate their supplements to this instruction with AF/A3O-AT before publication and will forward one copy to AF/A3O-AT after publication; subordinate organizations will coordinate their supplements with parent organizations and will furnish one copy of their supplement to the next higher headquarters. This document requires the collection and or maintenance of information protected by the Privacy Act of 1974. The Privacy Act System of Records Notice F011 AF XO A, Aviation Resource Management Systems (ARMS) covers required information. Ensure that all records created as a result of processes prescribed in this publication are maintained in accordance with AFMAN 33-363, *Management of Records*, and disposed of in accordance with the Air Force Records Disposition Schedule (RDS) located at **https://www.my.af.mil/afrims/afrims/afrims/rims.cfm**.

(PACAF) This supplement implements and extends the guidance of Air Force Instruction (AFI) 11-401, *Aviation Management*. The AFI is published word-for-word without editorial review. This supplement describes PACAF's procedures for use in conjunction with basic AFI. It applies to all Pacific Air Forces Command (PACAF) units and to the Air National Guard (ANG) and the Air Force Reserve Command and their units when aircrew or aircraft are under the operational control (OPCON) and/or tactical (TACON) control of PACAF or PACOM. This supplement also applies to members of other commands, direct reporting units (DRUs), and field operating agencies (FOA) (assigned and attached) when performing duties in PACAF aircraft or when under the operational control (OPCON) and/or tactical (TACON) control of PACAF or PACOM. Changes to the procedures in this publication are not authorized without approval of PACAF/A3TC. The reporting requirement in this publication is exempt from licensing in accordance with AFI 33-324, paragraph 2.11.10., *The Information Collections and Reports Management Program Controlling Internal, Public, and Interagency Air Force Information Collections*. Refer recommended changes and questions about this publication to the Office of Primary Responsibility (OPR) using AF Form 847, *Recommendation for Change of Publication*, route AF Form 847 from the field through the appropriate functional's chain of command, to HQ PACAF/A3TC, 25 E. Street, Suite G-317, Joint Base Pearl Harbor-Hickam (JBPH-H) HI 96853-5426. This publication may be supplemented at any level, but all direct supplements must be routed to the OPR of this publication for coordination prior to certification and approval. Local unit supplements may further restrict the provisions of this supplement. Units will provide a copy of their supplement to PACAF/A3TC and their respective numbered air force (NAF) before publication and will forward one copy to PACAF/A3TC after publication. Ensure that all records created as a result of processes prescribed in this publication are maintained in accordance with Air Force Manual (AFMAN) 33-363, *Management of Records*, and disposed of in accordance with Air Force Records Information Management System (AFRIMS) Records Disposition Schedule (RDS).

(35FW) This supplement implements and extends the guidance of Air Force Instruction (AFI) 11-401, Aviation Management and the PACAFSUP. Specifically, it outlines the 35 FW orientation flight program. This supplement applies to 35FW assigned personnel. Changes to the procedures in this publication are not authorized without approval of 35 OG/CC. The reporting requirement in this publication is exempt from licensing in accordance with AFI 33-324, paragraph 2.11.10., *The Information Collections and Reports Management Program Controlling*

Internal, Public, and Interagency Air Force Information Collections. Refer recommended changes and questions about this publication to the Office of Primary Responsibility (OPR) using AF Form 847 at the following email **35og.ogv@us.af.mil.** Ensure that all records created as a result of processes prescribed in this publication are maintained in accordance with Air Force Manual (AFMAN) 33-363, *Management of Records*, and disposed of in accordance with Air Force Records Information Management System (AFRIMS) Records Disposition Schedule (RDS).

SUMMARY OF CHANGES

This revision incorporates Changes 1 and 2 to AFI 11-401, 7 Mar 2007, removes HARM-specific procedural guidance throughout the AFI (migrates to AFI 11-421), clarifies HAF and MAJCOM responsibilities (**1.2** and **1.3**), provides MEP guidance (**1.6.2.5** and **Attachment 1**) updates orientation flight guidance (**Table 1.1**), updates guidance on commander flights with MEP on board (**1.12.4.1**) and guidance on general officer flights with passengers or MEP on board (**1.12.4.2** and **1.12.4.3**), updates ACIP entitlement information (**Figure 2.1**), updates OFDA requirements (**Table 2.7**) and deletes Transition Status Codes, updates OFDA waiver guidance (**2.6**), updates guidance on performance of flying duties (**2.7**, **2.8**, **2.9**, **2.10**), revises general officer flying guidance (**2.12.3.1**, **2.14.5.1**), adds RPA Time guidance (**3.2.3.1**), updates General Officer Flying Hour Information Report requirements (**3.15**), updates the Aircrew and MEP definitions (**Attachment 1**), and makes administrative changes throughout the AFI.

(PACAF) This document is substantially revised and must be completely reviewed. This supplement provides minor rewrite/reorganization and has aligned management functions at all levels with AFI 11-401. Numerous paragraphs and attachments are renumbered; MEP status approval has been extended to PACAF AMD commander or Deputy commander for PACAF owned missions (paragraph 1.6.2.6.1.); Orientation flights in non-US Air Force aircraft guidance has been revised (paragraphs 1.11.3. – 1.11.3.3.); Authorized PACAF Indoctrination flying positions have been updated (paragraph 2.14.8.); Remarks for AFTO Form 781, *ARMS Aircrew/Mission Flight Data Document* entries has been revised (Table A2.1); Mission symbols, (Table A2.2.) and flight authorization duty codes (paragraph A2.4.6.) were removed, follow lead command guidance; Flight authorization duty remark codes has been revised (Table A4.2.1.); (Attachment 13), Flying Status Code "S" and Aviation Service Code "04" 180/365 Day Waiver format has been added; and makes administrative changes throughout the supplement

(35FW) The definitions of the orientation, familiarization, and incentive flight categories have been clarified as they pertain to members serving at Misawa Air Base. Procedures have been revised to streamline the approval process for orientation, familiarization, and incentive flights. Table A14.1. has been added clarifying individuals prioritized for FAM flights with DLOs. Table A15.1 has been revised identifying specific authorizations per group. Attachments have been updated to reflect current processes and improved formats.

Chapter 1—RESPONSIBILITY AND OBLIGATIONS, FLIGHT AUTHORIZATIONS, AND FOREIGN MILITARY FLYING 8

Section 1A—Responsibilities and Obligations 8

1.1. Overview. 8

1.1. (PACAF) Who Must Comply. 8

1.2. Responsibilities of AF/A3O-A. 8

1.3. Responsibilities of MAJCOMs. 8

1.3. (PACAF) The Chief, Operational Support Division, (HQ PACAF/A3T): 8

1.4. Responsibilities of Subordinate Organizations. 10

1.5. Responsibilities of Aircrew Members and Parachutists. 14

1.6. Flying Obligations. 18

1.7. Waivers. 20

Section 1B—Flight Authorization 21

1.8. Aircraft Flight Authorizations. 21

1.9. Authorization for Using US Air Force Aircraft. 24

Table 1.1. Orientation Flight Approval Authorities (by Type of Flight) (Note 1). 27

Table 1.1. (PACAF) Orientation Flight Approval Authorities (by Type of Flight) 31

1.10. Authorization to Perform Inflight Duties in Air Force Aircraft. 32

1.11. Authorization to Perform Inflight Duties in Non-US Air Force Aircraft. 35

1.12. Requirements for Pilots in Dual Controlled Aircraft. 38

Section 1C—Flying by Military and Civilian Personnel of Foreign Nations in USAF Aircraft 39

1.13. Air Force Policy. 39

1.14. Flight Authorizations. 40

1.15. Procedures for Processing Requests that Require HQ USAF Approval. 40

1.16. Requests for Exception. 41

Chapter 2—AVIATION RESOURCE MANAGEMENT POLICIES 42

Section 2A—Flying Program 42

2.1. Rated Officer and Career Enlisted Aviator (CEA) Flying Program. 42

Table 2.1. Aircrew Position Indicator (API) Codes (Note 8). 42

2.2. Flying Activity Codes. 44

Table 2.2. Flying Activity Codes (FAC) (See Note below). 45

2.3. Aviation Service Codes (ASC). 46

Table 2.3. ASC First Character (Entitlement Status Code [ESC], Rated Officers). 47
Table 2.4. ASC First Character (Entitlement Status Code [ESC], Career Enlisted Aviators). 49
Figure 2.1. ACIP Entitlement Status, (Rated Officers). 50
Figure 2.2. CEFIP Entitlement Status (Career Enlisted Aviators). 51
Table 2.5. ASC Second Character (Flying Status Code [FSC], Disqualified or Suspended Status). 52
Table 2.6. ASC Second Character (Flying Status Code [FSC], Qualified Active and Inactive Flyer) (Note 1). 53
2.4. Operational Flying Duty. 55
Table 2.7. OFDA Requirements. 55
2.5. Rated Officer and Career Enlisted Aviator Operational Flying Duty. 55
2.6. OFDA Waivers. 57
2.7. Taking Part in Flying by Rated Officers. 60
2.8. Flight Surgeon, Pilot-Physician, and Critical Care Air Transport Team Flying Policy. 61
2.9. Taking Part in Flying by Career Enlisted Aviators. 63
2.10. Taking Part in Flying by Non-rated Officer Aircrew Members and Non-CEA Enlisted Aircrew Members. 63
Section 2B—Supervisory Operational Flying Positions 65
2.11. Supervisory Position Criteria. 65
2.12. Supervisory Flying. 66
Table 2.8. General Officer Flying Positions. 67
2.13. Supervisory Position Limitations. 69
2.14. Indoctrination Flying. 70
Table 2.9. Indoctrination Flying Approval Authority. 72
2.15. Operational Support Aircraft (OSA) and Aircrew Management. 72
Section 2C—Support of Personnel Assigned to Locations or Organizations Lacking Flying Facilities or Aircraft 73
2.16. Attachment for Flying/Parachuting. 73
Section 2D—Flying with Air Reserve Component Units 75
2.17. Total Force Absorption Program (TFAP) In addition to the guidance provided in this section, aircrew personnel must comply with Total Force Absorption Program (TFAP) guidance contained in AFI 11-412. 75
2.18. Flying With AFRC Units. 75

2.19. Flying With ANG Units. 75
2.20. Coordination Authorization. 76
2.21. TFI and Associate Units. 76
2.22. (Added-PACAF) The SARM: 76

Chapter 3—FLIGHT DOCUMENTATION 77

Section 3A—Logging of Flight Activity 77
3.1. Enter and credit flight time. 77
3.2. Crediting Flight Time. 77
3.3. Definition of Flight Time Categories. 79
3.4. Flight Condition Time. 84
3.5. Non-rated/non-CEA Flight Time. 85

Section 3B—Logging of Flight Activity (General) 85
3.6. Logging Flight Time for Pay. 85
3.7. Logging Flight Time by Rated Officers and Career Enlisted Aviators in Inactive Flying Status. 86
3.8. Non-rated/non-CEA Crewmembers and Operational Support Flight Time. 86
3.9. Logging Flight Time in Non-US Air Force Aircraft. 86
3.10. Logging Other US Military Time. 86
3.11. Logging Student Time. 86
3.11. (PACAF) For Inter-Service transfer members, HARM must obtain an official military document to update “Other US Military Time” in the career total field in ARMS. 87
3.12. Logging Foreign Military Time. 87
3.13. Logging Flight Time in Other Than Military Aircraft. 87
3.14. Logging Civilian Flight Time. 87
3.15. Quarterly General Officer Flying Hour Information Report. 87
3.16. Adopted Forms. 88
3.17. Prescribed Forms. 88

Attachment 1—GLOSSARY OF REFERENCES AND SUPPORTING INFORMATION 89

Attachment 1—(PACAF) GLOSSARY OF REFERENCES AND SUPPORTING INFORMATION 98

Attachment 2—INSTRUCTIONS FOR USING AFTO FORM 781, ARMS AIRCREW/MISSION FLIGHT DATA DOCUMENT 102

Attachment 3—ARMS AIRCREW/MISSION FLIGHT DATA EXTRACT 117

Attachment 4—INSTRUCTIONS FOR USING AF FORM 4327, ARMS FIGHTER FLIGHT AUTHORIZATION, AND AF FORM 4327A, CREW FLIGHT AUTHORIZATION (FA) 118

Attachment 5—(Added-PACAF) PACAF ORIENTATION FLIGHT GUIDELINES 125

Attachment 6—(Added-PACAF) MISSION ESSENTIAL PERSONNEL (MEP) 131

Attachment 7—(Added-PACAF) SAMPLE LETTER, ATTACHMENT FOR FLYING 133

Attachment 8—(Added-PACAF) SAMPLE LETTER, APPLICATION (NON-AIRCREW) FOR MISSION ESSENTIAL PERSONNEL (MEP) STATUS 135

Attachment 9—(Added-PACAF) SAMPLE LETTER (AIRCREW), APPLICATION FOR MISSION ESSENTIAL PERSONNEL (MEP) STATUS 136

Attachment 10—(Added-PACAF) SAMPLE LETTER, FLYING STATUS CODE "T"/INDOCTRINATION FLYER REQUEST 137

Attachment 11—(Added-PACAF) MISSION REQUIREMENTS LETTER 138

Attachment 12—(Added-PACAF) SAMPLE HEALTH STATEMENT FOR INCENTIVE/ORIENTATION FLIGHT ON NON-EJECTION SEAT AIRCRAFT 139

Attachment 13—(Added-PACAF) FLYING STATUS CODE "S" AND AVIATION SERVICE CODE "04" 180/365 DAY WAIVER FORMAT 141

Attachment 14—(Added-35FW) 35 FW ORIENTATION FLIGHT PROGRAM 143

Attachment 15—(Added-35FW) ORGANIZATION / GROUP FAM FLIGHT NOMINATION PROCESS 147

Attachment 16—(Added-35FW) MEMORANDUM FOR 35 FW APPROVAL 148

Attachment 17—(Added-35FW) MEMORANDUM OF SELECTION 149

Attachment 18—(Added-35FW) INCENTIVE/FAMILIARIZATION FLIGHT CHECKLIST 150

Chapter 1

RESPONSIBILITY AND OBLIGATIONS, FLIGHT AUTHORIZATIONS, AND FOREIGN MILITARY FLYING

Section 1A—Responsibilities and Obligations

1.1. Overview. The policies and requirements of this instruction apply to all personnel who fly onboard Air Force aircraft, and their commanders. In addition, it provides guidance on the Jump Record Folder (JRF), Aviation Service Codes (ASC), and flight authorization (FA) codes in **Table A2.3** for Air Force parachutists. Further guidance on parachutist policies and requirements can be found in AFI 11-410, *Personnel Parachute Operations.*

1.1. (PACAF)Who Must Comply. This supplement applies to PACAF assigned and attached aircrew and parachutists. It applies to Pacific Air Forces (PACAF), Air National Guard (ANG) and Air Force Reserve Command (AFRC) units when aircraft or aircrew are under the operational control (OPCON) and/or tactical (TACON) control of PACAF or PACOM. This supplement also applies to members of other commands, direct reporting units (DRUs), and field operating agencies (FOA) (assigned and attached) when performing crew duties in PACAF aircraft or when aircraft are under the operational control (OPCON) and/or tactical (TACON) control of PACAF (ANG/AFRC). Host Aviation Resource Management (HARM) offices servicing tenant units will establish and review all host-tenant support agreements IAW AFI 11-421, *Aviation Resource Management* annually.

1.2. Responsibilities of AF/A3O-A. The Director of Air Operations (AF/A3O-A):

1.2.1. Through the DCS, Operations, Plans and Requirements (AF/A3/5), and the Director of Operations (AF/A3O), establishes and monitors the Air Force flying program as outlined in this instruction to ensure effective use of resources. Unless otherwise specified in this instruction, AF/A3O-A is the waiver authority for this instruction. (See paragraph **1.7** for waiver guidance.)

1.2.2. Assigns AF/A3O-AT as the Office of Primary Responsibility (OPR) for this instruction.

1.3. Responsibilities of MAJCOMs. (For purposes of this instruction, ANG is considered a MAJCOM, except as provided otherwise.) MAJCOM/A3s will provide oversight of MAJCOM flying programs. MAJCOMs will establish a system to carry out the requirements of this instruction and meet training and operational needs of the Air Force.

1.3. (PACAF)The Chief, Operational Support Division, (HQ PACAF/A3T): has the responsibility for administering the provisions of this basic instruction within PACAF, and publishing the PACAF supplement.

1.3.1. MAJCOM Commanders will prohibit any agency or unit from operating or maintaining an aircraft that does not have an established system program director. Waiver authority is MAJCOM/A3; coordinate waivers with MAJCOM/A4. Aircraft procured through non-DoD resources will not be flown or operated by USAF units without MAJCOM approval.

1.3.2. MAJCOM Commanders may direct grounding of MDS-specific or all aircraft within their commands for maintenance reasons. When a MAJCOM has lead command aircraft responsibility, MAJCOM commanders may recommend grounding of all aircraft within an MDS-specific fleet. MAJCOM Commanders may also direct a stand-down of aircrew personnel when warranted by operational considerations, in conjunction with aircraft grounding or as a separate action. A stand-down has no immediate impact on the operational status of any unit aircraft; it is the result of an operational unit commander directing unit aircrews not to fly for a specific reason. A stand-down provides the commander time to assess an incident or finding and actions required to safely resume operations. Notification will be provided IAW AFI 10-206, *Operational Reporting.* See also AFI 21-101, *Aircraft and Equipment Maintenance Management*, for additional guidance. Return to normal operations will be initiated by the commander directing the original grounding/stand-down. Authority for grounding and/or stand-down may be delegated by MAJCOMs in supplements to this and other governing AFIs, but not lower than MAJCOM/A3/A4.

1.3.2.1. The Director, Air National Guard (DANG), may ground United States Air Force aircraft assigned to the Air National Guard (ANG) and stand-down ANG aircrews. The DANG will coordinate any grounding or stand-down decisions with the Chief, National Guard Bureau. When the DANG exercises this authority to ground aircraft, the Secretary of the Air Force and the Chief of Staff of the Air Force will be notified as soon as practicable. No further delegation of this authority is authorized.

1.3.3. Interfly Guidance. Lead MAJCOMs will place interfly guidance (if applicable) in AFI 11-2MDS-Specific, Volumes 3. As required, establish additional interfly guidance in MAJCOM supplements to this AFI. Prior to the flight, ensure interfly agreements are approved and all unit coordination is complete. Ensure required information is provided to members Host Aviation Resource Management (HARM) offices.

1.3.3. **(PACAF)** For purposes of this supplement, interfly is defined as the exchange and/or substitution of aircrew members and/or aircraft between operational units to accomplish flying missions. During contingencies, exercises, or designated missions, interfly operations will be conducted according to appropriate OPLAN or CONOPS. See the appropriate AFI 11-2MDS (Mission Design Series) Specific, Vol 3 publications for interfly requirements. When not specifically established by AFI 11-2MDS-Specific, Volume 3, OG/CC is the approval authority for interfly on PACAF aircraft under their control. In all cases, interfly aircrew will be qualified in the MDS.

1.3.4. Ensure no aircrew member is assigned Flying Status Code (FSC) S (**Table 2.6**) (except Duty Not Involving Flying [DNIF] members) or assigned ASC 04 (**Table 2.5**) beyond 180 days without being disqualified for aviation service, returned to flying/ground based radar duties, or reassigned to non-flying status/duty. MAJCOM/A3T or equivalent is the waiver authority for the 180-day limit. MAJCOM/A3 is the waiver authority to extend members in this status beyond 365 days. Send information copy to AF/A3O-AT for all cases waived beyond 365 days. ***Note:*** For members previously in DNIF status, the 180-day period begins on the date the member was cleared to perform flying duties.

1.3.4. **(PACAF)** HQ PACAF/A3TC will review and staff ASC "04," and FSC "S" waiver requests to HQ PACAF/A3T or A3/5, as appropriate.

1.3.5. Ensure FSC K (**Table 2.6**) is used only for aircrew members assigned to an active Aircrew Position Indicator (API), but not authorized to fly due to lack of resources (aircraft, flying hours, etc.). To ensure the requirement for active flying is still valid, each position occupied by a member assigned FSC K must be revalidated by the MAJCOM/A3 at the end of each fiscal year. The member's commander will submit a request for revalidation through group channels for MAJCOM/A3 approval. Upon completion of the revalidation, send notification to the member's Host Aviation Resource Management (HARM) office authorizing the continuance of FSC K. Send an information copy to AF/A3O-AT. See paragraph **1.4.1.9** for additional guidance. ***EXCEPTION:*** MAJCOM/A3 revalidation is not required for FSC K assigned to members deployed to a non-flying assignment.

1.3.5. **(PACAF)** HQ PACAF/A3TC will staff FSC "K" revalidation requests to PACAF/A3/5, and will notify member's HARM office and AF/A3O-AT of PACAF/A3/5 approval/disapproval. Staff revalidation requests to arrive at PACAF/A3T NLT 30 September of each year.

1.3.5.1. FSC K is not authorized when aircrew members are double billeted due to permanent change of station (PCS) or permanent change of assignment (PCA) actions.

1.3.6. Review all cases when a rated officer with longer than 18 years of aviation service and assigned to an active flying position, or a CEA with longer than 20 years of aviation service and assigned to an active flying position, has not flown for 180 days and is not in suspension, disqualification, or DNIF status. Review will determine whether the member should be disqualified from aviation service, reassigned to an inactive flying position, or returned to flying. ***Note:*** For members previously in DNIF status or assigned ASC 04, the 180-day period begins on the date the member was cleared to perform flying duties.

1.3.7. The serving HARM office will monitor double billeting management IAW paragraph **1.4.2.1** and provide a monthly report to the applicable MAJCOM/A3T. The MAJCOM/A3T will facilitate waiver request or aviation management actions with the servicing HARM office.

1.3.7. **(PACAF)** The designated HARM office will notify and advise commanders of all API 5, 6, 8, B, and D coded positions with more than one rated or CEA assigned. Monthly reports are due to PACAF/A3TC NLT the 10th of each month.

1.3.8. IAW AFI 33-360, *Publications and Forms Management*, MAJCOMs supplementing this AFI must rewrite, update (using an interim change [IC]), or certify supplements as current within 180 days of the publication of this AFI and whenever this AFI is updated (either by an IC or a rewrite). If the prior supplement conflicts with the current version of this AFI, the supplement must be immediately rescinded. Ensure subordinate organizations update supplements when higher headquarters publications are updated. See AFI 33-360 for specific guidance.

1.4. Responsibilities of Subordinate Organizations.

1.4.1. Commanders are responsible for compliance with the requirements of this instruction. Commanders will:

1.4.1.1. Issue orders and supervise all personnel assigned or attached to their command for flying duties.

1.4.1.2. Establish procedures to ensure all flights are reviewed for flight feasibility. Commanders may direct a stand-down of unit flying operations when warranted by maintenance, operational, or safety considerations. Provide notification IAW AFI 10-206, *Operational Reporting*.

1.4.1.3. Ensure compliance with appropriate instructions, and adequate crew preparation for safe conduct of flight.

1.4.1.4. Verify aircrew member qualification before assignment to an aircrew position.

1.4.1.5. Notify the HARM office within 10 days of the beginning of any investigations that may affect an aircrew member's aviation service (including Flying Evaluation Boards).

1.4.1.6. Notify the MAJCOM/A3T or equivalent office when a rated officer with longer than 18 years of aviation service and assigned to an active flying position, or a CEA with longer than 20 years of aviation service and assigned to an active flying position, has not flown for 180 days and is not in suspension, disqualification, or DNIF status. ***Note:*** For members previously in DNIF status or assigned ASC 04, the 180-day period begins on the date the member was cleared to perform flying duties.

1.4.1.6. **(PACAF)** When an incumbent assigned to an active staff flying position does not fly for 365 days, the flying justification on the AF Form 480, *Aircrew AFSC/Active Flying Justification* is invalidated and the MAJCOM will convert the position to an inactive API. If a commander requires a staff position without flight activity to remain active, submit a change request to HQ PACAF/A3T with justification that validates the continued need to keep the position active.

1.4.1.7. Ensure aircrew members that have been disqualified for aviation service have the appropriate disqualification aeronautical order (AO) published, even if the member may have already separated or was dismissed from the Air Force. Every effort should be made to accomplish the disqualification action before the aircrew member is separated or dismissed.

1.4.1.7. **(PACAF)** In cases where the member has separated, or has been dismissed from the Air Force, the HARM will follow guidance in AFI 11-421, Table 3.1., prior to forwarding (via First Class mail) the AO or FRF to the address listed on the member's separation orders. If all attempts fail, maintain FRF for 5 years then dispose IAW AFI 11-421, Chapter 3.

1.4.1.8. Ensure aircrew members assigned FSC S or assigned ASC 04 do not exceed 180 days in this status without obtaining approval from the MAJCOM/A3T. If an extension is required, the member's unit commander will submit the request for an extension/waiver prior to the 180-day limit. If a waiver of the 180-day limit was previously approved IAW paragraph **1.3.4**, the member's unit commander must again obtain waiver approval prior to the member exceeding 365 days in FSC S or ASC 04 status. AFI 11-402, *Aviation and Parachutist Service, Aeronautical Ratings and Badges,* provides applicable guidance for suspensions/disqualifications. See AFI 11-421, *Aviation Resource Management*, for additional guidance.

1.4.1.8. **(PACAF)** Commanders should coordinate closely with the servicing Host Aviation Resource Management (HARM) Chief, explore all options and be fully briefed on all ramifications prior to selecting a course of action concerning any rated aircrew member or career enlisted aviator (CEA) who will exceed the 180-day limit for FSC "S" (except members in Duty Not Involving Flying [DNIF] status). If member is DNIF the 180 day-count starts the day the member comes off DNIF status. Commanders will provide justification to the HARM office at the 150-day point explaining why the incumbent will remain in FSC "S" status beyond 180 days. The HARM office will forward request for extension complete with full justification, Attachment 13, to HQ PACAF/A3T, 25 E. ST SUITE G-317, JBPH-H, HI 96853-5426 prior to the expiration of the 180-day limit.

1.4.1.8.1. **(Added-PACAF)** PACAF/A3 is the waiver authority to extend members in this status beyond 365 days. Commanders will provide justification to the HARM office at the 335 day point explaining why the incumbent will remain in FSC "S" or ASC 04 status beyond 365 days. **Note*:*** For members previously in DNIF status, the 365-day period begins on the date the member was cleared to perform flying duties.

1.4.1.8.2. **(Added-PACAF)** Forward recommendations to HQ PACAF/A3TC, 25 E. ST SUITE G-317, JBPH-H, HI 96853-5426. PACAF's Aviation Resource Manager will staff the recommendations. All requests will be evaluated for determination as to the validity of converting or retaining the position.

1.4.1.8.3. **(Added-PACAF)** Without an approved extension, the unit OG/CC (or equivalent) must recommend flying evaluation board (FEB) action to the wing commander or equivalent for individuals who have been in FSC "S" for more than 180 days (except members in DNIF status). If FEB action is not recommended, the unit OG/CC (or equivalent) will notify HQ PACAF/A3TC, 25 E. ST SUITE G-317, JBPH-H, HI 96853-5426, and provide supporting documentation as to why the individual should not meet an FEB under the provisions of AFI 11-402, *Aviation and Parachutist Service, Aeronautical Ratings and Aviation Badges*. Do not use FSC "S" in lieu of an appropriate aviation service code.

1.4.1.9. Obtain OG/CC or equivalent approval for assignment of FSC K and provide the approval source document to the servicing HARM office for publication of the AO. The approval document will contain justification. Provide an information copy to the MAJCOM/A3.

1.4.1.9. **(PACAF)** NLT 1 Sep each year, the HARM office will notify the OG/CC (or equivalent) (and PACAF/A3TC for personnel assigned to the MAJCOM/NAF), in writing, of personnel assigned FSC "K". NLT 15 Sep each year the OG/CC (or equivalent) or WG/CC will request HQ PACAF/A3/5 revalidation for all personnel the CC desires to extend in FSC "K". Send FSC "K" revalidation requests (AO, IDS, Request letter), electronically to HQ PACAF/A3TC. PACAF/A3TC will staff to PACAF/A3/5.

1.4.1.9.1. The HARM office will use the letter approving return to aviation service as the source document to publish an AO to assign FSC K for members returned to service as the result of an FEB.

1.4.1.9.2. A member's commander will submit a letter or military orders to the servicing HARM office directing assignment of FSC K when the aircraft and/or unit is deactivated and the member is still assigned to an active billet pending reassignment. MAJCOM/A3 notification is not required.

1.4.1.9.3. Use the Contingency Exercise Deployment (CED) orders to assign FSC K effective the date of the deployment when a member is assigned to an active API and deployed to a non-flying assignment for 90 days or more. MAJCOM/A3 notification is not required.

1.4.1.9.3. **(PACAF)** Aircrew are not authorized to perform flying duties during periods of any non-flying TDY to include TDY periods less than 90 days IAW paragraphs 2.7.1.5., 2.8.5., 2.9.3., and 2.10.6.

1.4.1.9.3.1. Use the date the member returned from a non-flying deployment as documented by a signed DD Form 1351-2 (or suitable substitute) or commander's letter to return members to active aviation service.

1.4.1.9.4. In all cases, the HARM office will publish the AO, with explanatory remarks. If required, the OG/CC will submit a revalidation request to the MAJCOM/A3 no later than 30 September (see paragraph **1.3.5**). Upon receipt, the HARM office will permanently file all MAJCOM/A3 revalidation approvals on the left side of the member's FRF.

1.4.1.9.4. **(PACAF)** FSC "K" letters of explanation and annual revalidation requests will be submitted for staffing to the PACAF Aviation Resource Manager (HQ PACAF/A3TC) by the servicing HARM office. ***EXCEPTION:*** Letters of explanation and annual MAJCOM/A3 revalidation is not required for FSC "K" assigned to members deployed to a non-flying assignment.

1.4.2. Commanders, including nonflying unit commanders, manage assigned aircrew/parachutist members and coordinate changes affecting aircrew members flying status and parachutist members jump status with the HARM office. ***Note:*** This includes all Air Force Reserve Command Individual Mobilization Augmentee (IMA) flyers assigned to active duty units at gaining MAJCOMs.

1.4.2.1. Commanders will manage rated and CEA aircrew positions IAW AFI 11-412, *Aircrew Management*. API 5, 6, 8, B, and D coded positions may be double-billeted for replacement of the primary incumbent only, both members may be assigned an actively FAC/FSC provided the overlap is not more than 30 calendar days. On or before the 30th day, the commander will identify which aircrew member to assign inactive flying activity, FSC H. The MAJCOM/A3 may waive this paragraph to allow double-billeting and active flying for no longer than 180 calendar days. This waiver authority will not be delegated lower than the MAJCOM/A3. (***EXCEPTION:*** Staff personnel tasked to fill a deployed active flying billet may be double billeted for the duration of the deployment).

1.4.2.1. **(PACAF)** The HARM will validate aircrew/parachutist manpower position assignments quarterly to ensure billeting complies with AFI 11-412, *Aircrew Management*. The SARM will coordinate position assignment and AO action with the HARM as necessary. SQ/CCs will assign personnel to a valid position within 10 working days. If the SQ/CC does not assign the member to an active billet within 10

working days, the HARM will assign the member an inactive FSC "J." If the member is double-billeted, assign FSC H. Psuedo-8 positions are invalid and considered API-0 (non-flying) positions. Active flyers will not be assigned to a pseudo-8 billet. The AO assigning FSC "J" will remain in the record unless documentation can be provided to the HARM that proves the member was in a valid flying billet upon assignment.

1.4.2.1.1. **(Added-PACAF)** PACAF HARMs will review all API 6, 8, B, and D flyers in inactive status due to lack of support (FSC "K") quarterly. The HARM will audit the Unit Manpower Document, or other source document to verify these positions. Forward the names of inactive API 6, 8, B, and D incumbents to HQ PACAF/A3T, 25 E. ST SUITE G-317, JBPH-H, HI 96853-5426 to be considered for conversion to API 3, 4, C, or E positions in accordance with the basic instruction.

1.4.2.2. Commanders will manage non-rated & non-CEA aircrew and parachutist positions IAW AFI 11-402.

1.4.2.3. Commanders will ensure aircrew/parachutist members and/or unit orderly rooms notify the base HARM office of all non-flying/non-parachuting/non-controlling TDYs, projected PCS, retirement, or separation actions. This requirement can be met by forwarding copies of all aircrew/parachutist members/non-controlling TDY, permanent change of station (PCS), retirement, or separation orders to the base HARM office to process required AO or ARMS actions.

1.4.2.3.1. Commanders will ensure aircrew/parachutist members pick up their FRF/JRF from the HARM office prior to final outprocessing for PCS assignments.

1.4.2.3.2. Commanders will ensure aircrew/parachutist members and/or unit orderly rooms notify the HARM office prior to a permanent change of assignment (PCA) action.

1.4.3. **(Added-PACAF)** Units may further restrict the provisions of this supplement. Units will

1.5. Responsibilities of Aircrew Members and Parachutists.

1.5.1. Safely and effectively use available flying, controlling and parachute jump resources to obtain and maintain aircrew or parachutist qualification when assigned to active flying or jump billets. See AFI 11-402 for guidance pertaining to failure of members to accomplish aircrew or parachutist training requirements.

1.5.2. Accomplish an annual flight or jump records review to validate aviation/parachutist service actions and the record of flying or jump accomplishments during the previous year. HARM offices may e-mail annual record review documents for a member's review and certification. The member will complete the review not later than the end of the member's birth month. Members will acknowledge the review by either sending a signed Individual Data Summary (IDS) to the HARM office or by providing an e-mail reply confirming the review was completed. File review documentation with the IDS in the FRF/JRF. (Does not apply to cadets who do not have FRF/JRF requirements.)

1.5.2. **(PACAF)** Aircrew members/parachutists come in phase for their annual records review 4 months prior to the end of their birth month. The HARM will update the annual records review date in Aviation Resource Management System (ARMS) and place the signed

IDS in the aircrew member's flight record folder (FRF). Units may place unsigned ARM products in flight record folders to preclude the loss of historical documents pending receipt of signed products. If there are any changes to be made and source documents are not available, the HARM office will direct the member to the Air Force Board of Corrections of Military Records in accordance with AFI 11-421.

1.5.2.1. Certification is acknowledgement by the member that the flying/jump data is correct. Information maintained in the FRF or JRF will not be changed without official source documentation. For example an AFTO Form 781 or AF Form 3520 for missing flights and sorties, AETC Form 240-5 for student hours, an AF Form 922 or AF Form 4323 for missing jumps, Military ID or re-enlistment paperwork for date of separation change and personnel data that did not interface to ARMS, etc. In the absence of source documents, the member may submit a DD Form 149 to the Air Force Board for Corrections to Military Records (AFBCMR) IAW Air Force Pamphlet 36-2607, *Applicant's Guide to the Air Force Board for Correction of Military Records (AFBCMR).* HARM offices will ensure all flying hour corrections (especially to career totals) are supported by a source document. File a copy of the DD Form 149 in the FRF IAW AFI 11-421. Flying hour log books and/or letters submitted under previous Air Force Policy will be retained in the FRF IAW AFI 11-421.

1.5.2.1. **(PACAF)** E-mail replies confirming flight record review completion will be maintained on top of the IDS reviewed and must include the Individual Data Summary, Fly History Report, and Individual Flight Record (if applicable) product date. (Example: I certify that my annual flight records review is complete and accurate for all products dated 03 Jan 2011.).

1.5.2.1.1. AF/A3O-AT is OPR for AFBCMR requests. AF/A3O-AT may contact HARM offices directly to obtain documents for review/validation, to expedite corrective action if an AFBCMR request is received, or expedite corrective action to ARMS data received on the Consolidated Headquarters Aviation Resource Management System (CHARM) report (see AFI 11-421).

1.5.2.2. Inactive aircrew/jump personnel will accomplish a records review within 120 days prior to PCS. They are not required to accomplish annual reviews of their FRF/JRF.

1.5.2.3. Aircrew/jump personnel suspended or disqualified for aviation service will accomplish a FRF/JRF review within 30 days of the suspension or disqualification action. Geographically separated members will acknowledge the review by either sending a signed IDS to the HARM office or by providing an e-mail reply confirming the review was completed.

1.5.2.4. **(Added-PACAF)** If flight record information is not correct, the aircrew or parachutist must sign the IDS and annotate the incorrect information. The member will also include the statement "record is not true and accurate" on the first page of the IDS. The HARM office will update ARMS with the appropriate code.

1.5.3. Ensure the HARM office maintaining the FRF or JRF is aware of a pending PCS. The HARM office must be advised of the proposed departure date, date of last flight or jump before departure, and date the individual will pick up the FRF or JRF. Member must notify the HARM office at least five days prior to departure, if applicable. Geographically separated

members may send a written notification to the attached HARM office to mail their FRF/JRF to the gaining base. Validate flights accomplished before departing PCS and sign ARMS generated PCS products IAW AFI 11-421.

1.5.3. **(PACAF)** Individuals assigned to geographically separated units preparing for a permanent change of station (PCS) move will fax or E-mail one copy of AF Form 899, *Request and Authorization for Permanent Change of Station - Military*, to the servicing HARM office. Upon notification of pending PCS, the losing HARM office will forward the individual Flight Record Folder/Jump Record Folder (FRF/JRF) to the gaining HARM office, or to the member as appropriate, via U.S. First Class Mail. Aircrew/parachutists must ensure the HARM office receives the most recent AFTO Form 781 and/or AF Form 4323, *ARMS Multi-Crew Jump Record*, documenting flight/jump activity before PCS notification; or hand carry and deliver the applicable form extracts to the gaining HARM office.

1.5.3.1. **(Added-PACAF)** If applicable, the HARM office will notify PACAF/A3TC to delete attachment upon departure to a new assignment.

1.5.4. Pick up the Flight Evaluation Folder (FEF) and FRF or JRF before departing for PCS or flying/jumping TDY IAW AFI 11-421. Members initiating parachutist status, scheduled to attend jump school, must give the HARM office a copy of their TDY orders at least 5 work-days prior to TDY, to allow processing of the initial AO authorizing jump status.

1.5.4. **(PACAF)** Individuals scheduled to depart PCS, TDY (e.g. formal school), separate or retire will be responsible for notifying the HARM office 5 duty days prior to the date they desire to pick up their Flight Record Package (FRP)/Jump Record Package (JRP). The FRP/JRP will also include the member's Flight Evaluation Folder (FEF) if applicable. The individual will hand-carry the FRP/JRP to the next duty station. If the member fails to pick-up the FRP/JRP, the HARM office will obtain the forwarding address of gaining HARM and mail the appropriate records.

1.5.5. Turn in the FRF or JRF to the proper HARM office (or notify the HARM office that the record was mailed) within 10 duty-days after arriving at a new duty station (includes flying TDY). Inactive aircrew members and parachutists must also turn in the FRF, JRF, and FEF within 10 duty days. If a member does not turn in the FRF or JRF within the 10 day limit, the HARM office will suspend aviation career incentive pay (ACIP), career enlisted flyer incentive pay (CEFIP), hazardous duty incentive pay (HDIP), and static or high altitude low opening (HALO) jump incentive pay by assigning ASC 04 via AO. Upon receipt of the member's FRF/JRF, the HARM office will revoke the suspension and restore incentive pay, if otherwise qualified. HARM offices will consider mailed records as "turned in" and will not suspend incentive pay for these members. HARM offices will make every effort to contact the member prior to stopping incentive pay. HARM offices will ensure FRFs/JRFs are inprocessed to the ARMS database NLT 10 calendar days after receipt of the records. ***Note:*** The losing HARM office will mail the FRF to the gaining HARM office if the member's next duty location HARM office is not collocated within the gaining HARM office.

1.5.5. **(PACAF)** Active and inactive flight/jump record folders will be turned into the servicing HARM office no later than 5 duty days after arrival at a new duty station. HARMs will establish local procedures with the military personnel flight (MPF), military personnel element or military personnel section (MPS) to ensure flying/jumping personnel (active and inactive) are identified and informed of their responsibility to deliver the FRP/JRP to the

HARM. Inactive members will turn in the FRF/JRF and FEF within 5 days of arriving at a new duty station. If the member does not deliver the FRP/JRP to the HARM within the 5 duty day limit, the HARM will notify the member's commander of the pending suspension of aviation/jump status and ACIP, CEFIP, or HDIP effective the 11th duty day after arrival until receipt of the FRF/JRF for validation of qualification. Mailed records will be considered "turned in" and incentive pay will not be suspended. HARMS will include all notification attempts (to include commander notification(s)) with MILPDS validation as background material for publication of the ASC 04 (suspension) AO and cite AFI 11-401, paragraph 1.5.5., as the AO authority. **Note*:*** Active flying personnel will not be scheduled for flight activity until the HARM receives the FRP/JRP.

1.5.5.1. Aircrew members and parachutists assigned to an inactive API code/duty position (after an active flying assignment – PCA or PCS) will turn in their FEF to the HARM office within five duty days of assignment to an inactive API code/flying position (i.e. API-6 flyer is placed in an API-3 position). The HARM office will file the FEF inside the member's FRF. If the member returns to active flying status, the HARM office will contact the member to pick up the FEF or forward the FEF to the member's flying unit. (If the FEF is forwarded, the HARM office will retain a copy of the contents until receipt is acknowledged by the gaining unit.)

1.5.5.1. **(PACAF)** Suspended and disqualified aircrew members will turn in their FEF to the HARM office within five duty days of suspension or disqualification. The HARM office will file the FEF inside the member's FRF. If the member returns to active flying status, the HARM office will contact the member to pick up the FEF or forward the FEF to the member's flying unit. (**Note:** If the FEF is forwarded, the HARM office will retain a copy of the contents until receipt is acknowledged by the gaining unit.)

1.5.6. Turn in medical records to the Flight Medicine Element (FME) within 10 duty-days after arriving at new duty station and complete initial medical clearance requirements prior to first flight or jump.

1.5.6.1. Initial medical clearance requirements also apply to members who deploy for 365 days or longer in TDY or PCS status.

1.5.7. Complete flight physicals and Preventive Health Assessment (PHA) IAW AFI 48-123, *Medical Examinations and Standards* and AFI 44-170, *Preventive Health Assessment.*

1.5.8. Members will sign out their AF Form 702, *Individual Physiological Training Record* (original), and AF Form 1042, *Medical Recommendation for Flying or Special Operational Duty* (copy) from the HARM office prior to attending physiological/centrifuge training. Upon completion of training, return forms to the HARM office within 5 duty days after arrival at home station.

1.5.8. **(PACAF)** HARMS will maintain a copy of the signed out AF Form 702, *Individual Physiological Training Record* in the member's flight/jump record folder until the original AF Form 702 is returned.

1.5.8.1. **(Added-PACAF)** A member in DNIF status may be prohibited from attending physiological and centrifuge training by the Flight Surgeon. If DNIF, the HARM will brief the member to contact the Flight Medicine Element (FME) to verify eligibility to conduct training.

1.5.9. Inactive aircrew members will notify the HARM office not later than 10 duty days prior to departing on an authorized flying TDY (includes requalification courses).

1.5.9. **(PACAF)** Inactive individuals anticipating either temporary or permanent assignment to flying duties are required to obtain a FAC 6 waiver in order to requalify or fly while still in an inactive billet. Contact the HARM at least 30 days prior to departure to receive assistance in processing the waiver request.

1.5.10. Request attachment for flying according to paragraph **2.16** when assigned to an active flying billet in a unit without flying facilities or aircraft.

1.5.10. **(PACAF)** Aircrew must request attachment for flying according to **paragraph 2.16 and Attachment 7,** when assigned to an active flying billet in a unit without flying facilities or aircraft. Attached aircrew are required to obtain and maintain qualification IAW AFI 11-202, Vol 1, *Aircrew Training*. **Exception:** Attachment is not required for individual's assigned FSC "K" IAW **paragraph 1.3.5,** or dual billeted aircrew assigned FSC "H" IAW **paragraph 1.4.2.1**

1.5.11. When aircrew members depart PCS or PCA, ensure sign-out from unit/base does not negatively affect Operational Flying Duty Accumulation (OFDA) credit. Aircrew members require at least 15 days on active flying status in a month to receive OFDA credit for that month. See paragraph **2.5** for additional guidance pertaining to operational flying duty.

1.5.11.1. Aircrew members assigned to an active flying billet who are being reassigned to an inactive billet should make every effort to outprocess from their unit/base *after the 15th of the month* to provide an opportunity to obtain the last month of OFDA credit (if flight requirements are also met).

1.5.11.2. Aircrew members assigned to an inactive billet who are being reassigned to an active billet should outprocess from their unit/base *before the 15th of the month* to provide an opportunity to obtain OFDA credit for the first month of assignment in an active billet (if flight requirements are also met).

1.6. Flying Obligations.

1.6.1. **During Time of War.** Commanders (including unit commanders) may order Air Force members on active duty to make flights in any aircraft. Members are not entitled to incentive pay unless placed on active AOs that require them to perform specific in-flight duties on a frequent and regular basis as defined in this instruction. Members are not entitled to such pay if the pay is suspended by the President according to Title 37 United States Code (USC). Members are entitled to flight credit IAW paragraph **3.2**

1.6.1.1. Members qualified on the aircraft in which they are tasked to perform in-flight duties log the appropriate aircrew certification code IAW **Table A2.3** and flying hours associated with duties performed IAW **Section 3A** of this instruction.

1.6.1.2. Members not qualified on the aircraft in which they are tasked to perform in-flight duties log "O" or "X" aircrew certification code (first character) and other time IAW paragraph **3.3.5**

1.6.2. **In Time of Peace.** Commanders (including unit commanders) may order Air Force members on active duty to make official flights when in the best interest of the Air Force. Aircrew members on active flying status AOs will receive incentive pay if otherwise

qualified and flight requirements are met (does not apply to non-interference fliers on AOs). Rated officers and CEAs will receive OFDA credit if otherwise qualified.

1.6.2.1. Military and civil service (GS) aircrew members who are properly qualified, meet the criteria of this instruction and AFI 11-402 for initiating aviation service, and are directed to perform specific inflight duties on a frequent and regular basis will be placed on AOs and a flight authorization.

1.6.2.1.1. An aircrew member not obtaining or maintaining qualification in a specific aircraft will be placed on the flight authorization for that aircraft only when his or her presence is required for accomplishment of the mission. (See also paragraph **1.8.1**) These members will log time IAW paragraph **3.2** of this instruction.

1.6.2.1.2. Aircrew members in a specialty not listed in an AFI 65-503, US Air Force Cost and Planning Factors, crew complement, who are not obtaining or maintaining aircraft qualification, may be authorized to fly IAW paragraph **1.8** and log flying times IAW paragraph **3.2** of this instruction when required for the mission.

1.6.2.2. Non-aircrew members who are properly qualified and directed to perform specific inflight non-interference duties will be placed on AOs and the flight authorization but will not be placed on the AFTO Form 781, *ARMS Aircrew/Mission Flight Data Document*. Refer to paragraph **2.10.4** for additional guidance. ***EXCEPTION:*** Non-aircrew members assigned to flying unit commander positions or remotely piloted aircraft (RPA) sensor operator positions (1N1XX) may log flying time in assigned aircraft IAW paragraphs **3.2.1.5.2** and **3.2.1.5.3**

1.6.2.3. Military members not on AOs, and not required to perform duties or obtain and maintain qualification in the aircraft, must fly in passenger status. These members will be placed on a passenger manifest, and must fly on commercial or military aircraft with adequate facilities for transporting passengers. Refer to paragraphs **1.8.3, 1.9.4.7.**, **2.10.5.**, and applicable MDS-Specific guidance for further passenger guidance/restrictions.

1.6.2.4. Commanders, including unit commanders, may detail by written orders personnel under their command to take part in aircraft flights operated by any foreign government accredited by the United States, provided the flights do not add additional expense to the US Government, and provided personnel are on AOs authorizing frequent and regular flights. See paragraph **1.11** for additional guidance.

1.6.2.5. Personnel who are required for the execution of the aircraft or unit mission and personnel not authorized AOs (as specified above) tasked to perform unique ground support duties at an enroute location or destination point that are directly related and essential to accomplishment of the aircraft or unit mission may fly as Mission Essential Personnel (MEP). MAJCOMs may further define MEP in MAJCOM supplements to this instruction, but guidance may not be less restrictive than the guidance contained herein. See paragraph **1.12.2.2** for additional guidance, and **Attachment 1, *Terms***, for MEP definition.

1.6.2.5.1. The OG/CC (or equivalent) with operational control of the mission being flown authorizes MEP status. If operational control transfers, the OG/CC (or equivalent) who assumes follow-on operational control may continue/revise MEP status (coordinate changes with originating OG/CC). MAJCOMs may establish intra-

command and inter-command guidance to facilitate this process. MEP may only fly on aircraft capable of carrying passengers IAW the provisions of DoD 4515.13-R, *Air Transportation Eligibility*. ***EXCEPTIONS:*** MEP who are mission essential may fly on aircraft not normally equipped for carrying passengers. MEP who fly under the provisions of this exception must be physically and physiologically (when required) qualified and must complete applicable egress training prior to flight.

1.6.2.5.2. **(Added-PACAF)** Reference Attachment 6 for additional MEP guidance.

1.6.2.6. MAJCOMs may designate aircrew members who travel as additional crewmembers (not required for the mission being flown but required for follow-on missions) as MEP. Approval authority may be delegated below MAJCOM level.

1.6.2.6.1. For AMC missions already in the system, the TACC Senior Controller may approve MEP status. For other MAJCOM missions in the system, MAJCOMs may designate (in MAJCOM supplements) individuals who may approve MEP status for members assigned to the command. Approval authority will be retained at the MAJCOM level unless the MAJCOM functional authority is exercised from a subordinate NAF, in which case the NAF may exercise approval authority. MAJCOM Standardization/ Evaluation Chiefs may approve MEP status for MAJCOM or MAJCOM-gained missions for evaluators assigned to the MAJCOM. Additional crewmembers who fly in MEP status may only fly on aircraft capable of carrying passengers IAW provisions of DoD 4515.13-R.

1.6.2.6.1. **(PACAF)** For PACAF missions that have departed their originating location, OG/CC approved MEP are approved through the final destination as identified on the Flight Authorization itinerary. Once an aircraft has departed the originating location, the PACAF AMD Commander or the Deputy Commander may approve MEP status for individuals not previously authorized by the originating location OG/CC for PACAF owned missions. For MEP approval on TACC owned missions, seethe basic AFI for guidance.

1.6.2.7. **(Added-PACAF)** MEP will be approved by name and limited to the period required to support the particular unit, mission, or aircraft. ***EXCEPTION:*** Maintenance personnel, MRTs, PHOENIX RAVENs, MAJCOM or MAJCOM-gained aircrew evaluators, who are required to support multiple aircraft and/or missions may be authorized MEP status by name for a period not to exceed six months. Subsequent/consecutive six-month approvals may be granted.

1.7. Waivers.

1.7.1. For Combat Missions or National Emergencies. MAJCOM commanders may waive any requirements of this instruction when necessary to carry out combat missions or to accomplish missions flown during a state of national emergency. Provide notification to AF/A3/5 with a copy to AF/A3O-AT.

1.7.1.1. **(Added-PACAF)** Wing commanders will submit waiver requests to the NAF/A3. The NAF/A3 will obtain Commander, Numbered Air Forces (NAF/CC) coordination and forward to HQ PACAF/A3T. HQ PACAF/A3T will review and staff to Commander, Pacific Air Forces (PACAF/CC) for approval. If the situation is time critical, telephone waivers are authorized, followed by a waiver request via message.

Waiver of any requirement of the basic instruction or of this supplement, due to combat mission or national emergency will not automatically entitle an individual to receive Aviation Career Incentive Pay (ACIP), Career Enlisted Flyer Incentive Pay (CEFIP), or Hazardous Duty Incentive Pay (HDIP), as applicable. The provisions of AFI 11-401, paragraph 3.2., and Table A2.3. (Notes) must still be met to qualify for incentive pay.

1.7.2. At Other Times. Unless otherwise specified in this instruction, AF/A3O-A is the waiver authority for this instruction. Request waivers through applicable channels to the MAJCOM/A3, or equivalent level. MAJCOM/A3s (or equivalents) will forward requests to AF/A3O-A, with a courtesy copy to AF/A3O-AT. Waiver authority for supplemental guidance will be as specified in the supplement and approved through the higher level coordination authority.

1.7.2. **(PACAF)** Unless otherwise specified in this guidance, PACAF/A3/5 is the waiver authority for this guidance. Forward all waiver requests to HQ PACAF/A3TC, 25 E. ST SUITE G-317, JBPH-H, HI 96853-5426 for staffing.

1.7.3. Administrative Procedures. MAJCOMs may publish HQ USAF waivers in supplements citing the authority (e.g., HQ USAF/A3O-A memo, date, subject). See AFI 33-360 for additional guidance on waivers to publications.

Section 1B—Flight Authorization

1.8. Aircraft Flight Authorizations.

1.8.1. Prior to all flights in Air Force aircraft, commanders (including unit commanders) issue written authorizations documenting all personnel required to perform inflight duties on the mission. Units will use AF Form 4327, *ARMS Fighter Flight Authorization*, or AF Form 4327a, *Crew Flight Authorization*, as applicable to the unit aircraft. A commander's (including unit commanders) verbal authorization may direct aircraft flight only when time constraints or administrative procedures prevent written authorization. Written confirmation of this order must be issued within three duty-days. Once a Flight Authorization (FA) has been signed, changes to aircrew names and/or duty positions must be validated by a designated approving authority by placing the approving authority's initials by the line changed. The OG/CC or equivalent commander with operational control of the mission is responsible for the publication/ maintenance/retention of the aircraft FAs for each mission flown by the aircraft. Only commissioned officers and officer equivalent government civilians in active flying positions are authorized to be authenticating officials for Flight Authorizations. FA authenticating officials will be appointed in writing by the OG/CC or equivalent commander. ***EXCEPTION 1:*** Aeromedical Evacuation (AE), Pararescue (PJ), and ANG Senior Scout unit commanders and properly designated authenticating officials may publish a FA for assigned aircrew members required to perform aircrew duties on the mission. Commanders or designated authenticating officials must ensure all members listed meet go/no-go criteria prior to authenticating the FA. The FA is not a stand-alone document and must be attached to the aircraft FA for the mission on which aircrew members were required to perform in-flight duties. If the AE or PJ crew is scheduled to perform aircrew duties on more than one mission, a remark will be placed on the FA to depict variations. As a minimum, the information in blocks 11 through 18 must be documented on the flight authorization. In the Remarks section of the aircraft FA, annotate the AE/pararescue FA

number, date, and unit designation. The FA is a critical document used to validate aircrew member‘s duties/flight time logged on the AFTO Form 781. Officers or officer equivalent government civilians will be designated as FA authenticating officials in writing by the OG/CC or equivalent commander. Members properly designated as FA authenticating officials IAW this paragraph are not required to be assigned to an active flying position to perform FA authentication duties. ***EXCEPTION 2:*** RPA units will complete a preflight authorization signed by the aircraft commander to confirm go/no-go checks were completed. The authenticating official will issue a verbal order for the mission. The FA will be published upon termination of the mission and include crew members who flew on the mission, verbal order acknowledged in the remark section, and AC block initialed by the duty scheduler.

1.8.1. **(PACAF)** For all PACAF units, use the AF Form 4327, *ARMS Fighter Flight Authorization* or AF Form 4327a, *Crew Flight (FA) Authorization,* or a computer-generated (GDSS, PEX. etc.) equivalent. Flight Authorizations generated by these automated systems must contain all the required information contained on the actual Air Force form. These forms/formats will be used for all missions including those flown in the local area. Number all flight authorizations consecutively beginning with the first flight departing 1 Oct of each fiscal year (Example – 12-0001) and maintain the numbers in a flight authorization number log. Maintain flight authorizations and logs IAW AFRIMS, Table 13-10.

1.8.1.1. Units will validate go/no-go qualification IAW AFI 11-202, Volume 2, *Aircrew Standardization/Evaluation Program,* prior to authorizing members to participate in aircrew or operational support duties. Once a FA has been published, the pilot in command, or FA authenticating official if the pilot in command is not available, will validate go/no-go status for additional aircrew or operational support members prior to authorizing them to fly and adding or attaching them to the FA. Validation may include ARMS products IAW AFI 11-421 (or comparable database for USAFA airmanship programs), a FA from an AE, Pararescue, or Senior Scout unit commander (or designated representative), or a letter from the member’s unit validating the individual‘s qualification to fly on required missions. ***Note:*** When preparing flight authorizations for missions scheduled on future dates, the aviation resource management specialist or designated representative responsible for go/no-go validation will confirm the member’s AO status and ensure currency (to include flight physical and physiological training) and qualification will remain valid through the scheduled flight date(s). The FA is an official document depicting what actually occurred on the mission. The original, printed, signed forms with changes annotated are required documentation. Reproduction and disposal of the original forms to remove pen/ink changes after the flight authenticating official has signed the form and sorties/missions have occurred is not authorized.

1.8.2. The flight authorization must include (minimum requirements):

1.8.2.1. A designated pilot-in-command, and formation flight leader of each flight or flight element.

1.8.2.1. **(PACAF)** The Pilot In Command (PIC) is responsible for the safe conduct of the mission to include en route crew rest. In multi-place aircraft the aircraft commander or above will occupy either the left or right seat during all takeoffs and landings. Unless the AFI 11-2-MDS Vol 3 dictates otherwise, the designated PIC (A-code) is not required to occupy a primary position but still retains overall authority for conduct of the mission.

Only one person will be in command at a time. Notify all members of the crew and deliver a complete aircrew briefing when a change of command occurs.

1.8.2.1.1. **(Added-PACAF)** For missions that are authorized two complete crews, an aircraft commander will be in command of each crew. Designate one as the operating crew and the other as the additional crew for specific route segments or to the mission turnaround point. Prepare a separate flight order and designate the operating segments for each crew.

1.8.2.2. Name, grade, and flight authorization duty code (**Table A2.3**) of each crewmember, operational support flier, or any other official personnel (use the position designation established by the MAJCOM) required for the mission or flight.

1.8.2.3. Type, serial number, mission symbol, and call sign of aircraft or formation.

1.8.2.4. Place from which the flight will depart plus "on-or-about" departure date.

1.8.2.5. An itinerary and the phrase "Variations in itinerary authorized."

1.8.3. Flight authorizations will only include personnel on AOs (or contract aircrew personnel on a memorandum of agreement/contract) authorized to perform in-flight duties for that mission according to paragraphs **1.10** and **3.2** of this instruction. Except for MEP and non-interference members, individuals on the flight authorization should match those authorized to log time on the AFTO Form 781, *ARMS Aircrew/Mission Flight Data Extract*.

1.8.3.1. Personnel who are on the aircraft for point-to-point travel, an orientation/familiarization flight or to only perform a proficiency jump (not performing aircrew duties for that mission) will be listed on the passenger manifest. Passenger manifesting is required on all DoD owned and controlled aircraft, IAW DoD 4500.09-E, *Transportation and Traffic Management*.

1.8.3.2. If MEP are transported, IAW MAJCOM supplements, they may be listed on the flight authorization in the Remarks section only. If MEP are listed on the flight authorization, the Remarks section will include all information required by DD Form 2131, *Passenger Manifest*, to include emergency contact information. If MEP are not listed on the flight authorization, they must be placed on the passenger manifest. MEP will not be listed on the AFTO Form 781, will not log time, and will not accrue OFDA credit.

1.8.4. If a mission is cancelled after the FA is signed, line through the canceled portion(s) of the flight authorization and annotate the reason for cancellation (e.g. weather or maintenance cancel).

1.8.4. **(PACAF)** PACAF Units are required to maintain cancelled FAs numerically in the original record set with the annotated reason for cancellation.

1.8.5. MAJCOMs will establish procedures to ensure compliance with the guidance in this section for alert sorties.

1.8.5. **(PACAF)** PACAF units may publish a FA template omitting mission number, destination, mission symbol and purpose, aircraft tail number, call sign, and flight authorization number for alert sorties. If missions are alerted, omitted information must be added (pen-and-ink) to the FA template, assigned a FA number, incorporated into the flight

authorization log and filed in the original record set within three duty-days IAW paragraph 1.8.1. of the basic AFI.

1.8.6. **(Added-PACAF)** Unit commanders will not authorize any crewmember to be on the flight authorization who is DNIF, on leave, on permissive TDY, on a non-flying TDY, or who will enplane or deplane en-route for leave purpose. Personnel DNIF, on leave, permissive TDY, or non-flying TDY will not perform aircrew or operational support duties on PACAF aircraft, and will not receive credit for flight time and/or flight training events.

1.9. Authorization for Using US Air Force Aircraft.

1.9.1. Commanders (including unit commanders) authorize aircraft flights to support command operations.

1.9.2. Commanders (including unit commanders) will ensure each flight is in the direct interest of government business and does not exceed flying hour allocations without specific approval. Commanders (including unit commanders) will **not** authorize flights for personal convenience or recreation.

1.9.3. The transportation of passengers and cargo will be in accordance with DoD 4515.13-R. The Deputy Chief of Staff/Logistics, Installations & Mission Support (HQ USAF/A4/7), develops and publishes passenger policy to oversee passenger movement. AFI 24-101, *Passenger Movement*, provides guidance and procedures for arranging official transportation of Air Force personnel.

1.9.4. Commanders (including unit commanders) may use Air Force aircraft under their control to:

1.9.4.1. Perform tactical and combat operations.

1.9.4.2. Train aircrew personnel and evaluate aircrew performance.

1.9.4.3. Allow aircrews to meet the flying requirements of this instruction.

1.9.4.4. Further national health or safety interests, to include saving of human life if a medical officer indicates the situation involves possible loss of life, limb, or sight (DoD 4515.13-R).

1.9.4.5. Cooperate with foreign governments as directed by HQ USAF.

1.9.4.6. Perform other official missions as required.

1.9.4.6.1. **(Added-PACAF)** Off-Station/Cross Country. Unit commanders will ensure off-station

1.9.4.7. Conduct the Air Force Orientation Flight and Public Affairs Travel programs according to DoD 4515.13-R; AFI 11-301, *Aircrew Flight Equipment (AFE) Program*; AFI 11-403, *Aerospace Physiological Training Program*; AFI 35-103, *Public Affairs Travel*; AFI 35-105, *Community Relations*; AFI 48-123, this instruction, and MAJCOM guidelines.

1.9.4.7.1. Orientation Flights. The USAF conducts orientation flights to reward and motivate individuals (incentive orientation flights only), ensure a better understanding of a particular weapon system and its role, or when the flight is determined to be in the best interest of the USAF. Orientation flights may be approved as provided in

DoD 4515.13-R and this instruction. No authority exists for approval of an orientation flight during which a record attempt is made, a first flight is made on an aircraft just accepted into the inventory, a first flight over an isolated geographical area, or any other flight of a similar or special nature, where abnormal conditions may exist. **Table 1.1** is a matrix of approval authorities for orientation flights.

1.9.4.7.1. **(PACAF)** Orientation Flight requests must be submitted IAW Attachment 5 and Attachment 12 of this supplement.

1.9.4.7.1.1. Distinguished Visitor (DV) Flights. Display USAF weapons systems to individuals so they gain a better understanding of the particular aircraft and mission.

1.9.4.7.1.2. Familiarization Flights. Familiarize individuals who normally have aviation-related responsibilities with USAF aircraft and missions.

1.9.4.7.1.3. Incentive Flights. Provide a visible reward to USAF active duty and Air Reserve Component military personnel for outstanding service and motivate other military personnel to similar performance levels.

1.9.4.7.1.4. Spouse Orientation Flights. Familiarize military spouses with the unit aircraft and mission to enhance their understanding of the military member's role and contribution to the Air Force mission. Spouse orientation flights will be limited to retention and recruitment of critical skills and will not be expanded to an all-skills, service-wide program. Spouse orientation flights will adhere to the following guidance:

1.9.4.7.1.4.1. Provide flights within approved flying hour programs.

1.9.4.7.1.4.2. Do not use aircraft requiring routine oxygen breathing equipment, or equipped with ejection seats, or have automatic escape devices requiring special training.

1.9.4.7.1.4.3. Do not accomplish simulated emergency procedures, unusual attitudes, touch-and-go landings, minimum altitude, terrain following profiles, airdrop missions, and other maneuvers/profiles listed in MDS-specific publications as prohibited with passengers on board.

1.9.4.7.1.4.4. Ensure a qualified pilot or copilot occupies the seat throughout the flight. Under no circumstances will a spouse be given control of the aircraft. The pilot in command will brief this restriction prior to each mission.

1.9.4.7.1.4.5. Units with fighter, bomber, and two-seat trainer aircraft may establish an aircraft spouse taxi-ride program.

1.9.4.7.1.5. Passengers on orientation flights must be in appropriate organizational uniform, where applicable, and present appropriate identification.

1.9.4.7.2. Public Affairs Flights. The Air Force conducts public affairs flights for prominent US citizens, civic leaders, news media representatives, etc. See AFI 35-103 for guidance, to include approval authorities for public affairs flights.

1.9.4.7.3. MAJCOMs, ANG, FOAs, and DRUs will administer orientation and public affairs flight programs according to the above guidelines. Secretary of Defense

moratorium, "Civilian Visitors Operating Military Equipment" (22 Feb 01), and CSAF memorandum, "Air Force Policy on Civilian Visitors Operating Military Equipment" (20 Jul 01), apply (source documents on file in HQ USAF/A3O-AT; copies available upon request). For approval authorities in **Table 1.1**, ANG will use equivalent positions, as appropriate.

1.9.4.7.3.1. Maintain appropriate documentation on activity levels and periodically evaluate program effectiveness.

1.9.4.7.3.2. Units requesting orientation flight support from other MAJCOMs will submit a request through their owning MAJCOM/A3 to the supporting MAJCOM/A3 for staffing and approval.

1.9.4.7.3.2. **(PACAF)** Submit request for orientation flight support from another MAJCOM to PACAF/A3TC, 25 E. ST SUITE G-317, JBPH-H, HI 96853-5426 for staffing.

Table 1.1. Orientation Flight Approval Authorities (by Type of Flight) (Note 1).

Line	A	B	C
	Type of Flight	**Authorized Participants**	**Approval Authority**
1	Distinguished Visitor (DV) Orientation flight	Members of the Congress or their staffs (Note 2)	SECAF via SAF/LL (Note 2)
2		Senior Federal government (U.S.), and equivalent foreign government officials (Brigadier General [equivalent] and above or civilian equivalents) (Note 5)	MAJCOM/CC (Notes 3, 4,
3		US ambassadors and their senior deputies, within overseas theaters, when invited by the theater or component commander	Overseas MAJCOM/CC (Notes 3, 4)
4	Familiarization orientation flight	Foreign nationals working for the DoD, when in the commander's overseas area of responsibility, and when the commander has determined that the flight is in the primary interest of the DoD. (Ref. DoD 4515.13-R, Chapter 10.) (Note 5)	
5		Foreign civilians (Notes 5, 10). See AFI 35-103 for foreign media flights.	AF/CV (Note 13)
6		Foreign military (Brigadier General [equivalent] and above or civilian equivalents) (Note 5)	MAJCOM/CC (Notes 3, 4)
7		Foreign military (Brigadier General [equivalent] and above or civilian equivalents) for requests that do not fall within normal MAJCOM channels (i.e., FOA requests) (Note 5)	HQ USAF/A3O-A
8		Foreign military (Colonel [equivalent] and below or civilian equivalents) (Note 5). Non-DoD Federal government (U.S.) officials (Colonel [equivalent] and below).	MAJCOM/FOA/ DRU/CC (Note 3) (May be delegated to NAF/CC and Center/CC)
9		Foreign nationals during participation in exercises sponsored or directed by: CJCS, Combatant Commanders, and USAF component commanders of the Combatant Commands, which include combined operations of U.S. and foreign forces. (Ref. DoD 4515.13-R, Chapter 2.) (Notes 5a, 6) (Note 1 N/A)	MAJCOM/CC (Note 3) (May be delegated to the Deployed Forces Commander)

10		Foreign military not listed above. (Ref. AFI 11-401, Chapter 1.) (Note 5)	AF/A3O-A
11		U.S. citizens, when in direct support of the approving command. (Ref. DoD 4515.13-R, Chapter 10.) (Note 7)	MAJCOM/CC (Note 3)
12		Active-duty and Reserve Component military (all grades) and DoD civilian equivalents (all grades) (Note 15)	MAJCOM/A3 (Notes 3, 12, 15) (May be delegated but not lower than WG/CC or equivalent level)
13		Service Academy and ROTC cadets and midshipmen (Notes 8, 14)	
14		Junior ROTC, Civil Air Patrol, Explorer Scouts (Note 12)	
15		FAA employees (comply with DoD 4515.13-R, Chapter 4.)	
16		Civilian employees of DoD contractors (Note 9)	
17		Youth in Congressionally sanctioned, DoD-approved Youth Programs (Notes 10, 11, 12)	
18	Incentive orientation flight	USAF active-duty and ARC military members (Note 15). See paragraph **1.9.4.7.1.3**.	
19	Spouse orientation flight	Spouses of US active-duty and ARC military members. See paragraph **1.9.4.7.1.4**.	
20	Orientation flights in non-USAF aircraft	Active-duty and Reserve Component military (all grades) and DoD civilian equivalents (all grades) (Note 15)	See paragraph **1.11.3**
21	Point-to-point flights	Point-to-point orientation flights are not authorized (Ref, DoD 4515.13-R, Chapter 4) (Note 1); an exception to policy must be approved to permit point-to-point flights. See Note 1a for additional guidance.	AF/CV (Note 13); SECAF for Line 1
22	Exceptions to policy/All other orientation flights	Not listed above	AF/CV (Note 13)

This table provides approval authority guidance for orientation flights (as defined in DoD 4515.13-R, Chapter 4) <u>only</u>. Guidance for Public Affairs flights (ref. DoD 4515.13-R, Chapter 3) is provided in the DoD regulation and in AFI 35-103.

NOTES:

1. "Orientation flights" are defined as continuous flights performed within the local flying area and terminating at the point of origin (DoD 4515.13-R, Chapter 4). "Note 1 N/A," means the category of flight may not be considered an orientation flight; however, it is included in the table as a consolidated reference source.

1a. ***EXCEPTION:*** Units may accomplish orientation flights within the local flying area to operational and remote sites that are part of the home unit, as long as the mission terminates at the point of origin. Such flights providing unit mission orientation are not considered point-to-point flights and an exception to policy is not required (OSD-ATL policy guidance, Feb 10).

2. Requests for point-to-point travel must be specifically addressed and approved by SECAF. Retiring members of Congress and retiring congressional staff members may be flown on orientation flights only upon the written approval of the Assistant Secretary of Defense for Legislative Affairs (ASD[LA]). (Ref. DSD Memo, 23 Dec 1996.) For Line 1, initiate action through SAF/LLO (SAF/LLO Workflow in the Global Address List).

3. When aircraft are "chopped" or assigned to a gaining Combatant Commander, approval authority will be the Commander Air Force Forces (COMAFFOR) or Theater Special Operations Command (SOC) commander.

4. Inform AF/CC, AF/A3/5, AF/A3O, AF/A3O-A, if approved. (Provide notification to respective Workflows in the Global Address List.)

5. Flights involving foreign nationals must be reviewed for foreign disclosure requirements and political concerns. Foreign government officials are equivalent to U.S. Federal government officials and do not include local government officials such as mayors, police chiefs, and other local officials who do not represent a foreign government at the national level. Foreign military "civilian equivalents" are comparable to DoD "civilian equivalents."

a. Ensure foreign disclosure requirements and base visit requests are satisfied according to AFI 16-201, *Air Force Foreign Disclosure and Technology Transfer Program*. Contact MAJCOM or COCOM Foreign Disclosure Officer (FDO) for assistance.

b. Coordinate with the country director in the appropriate SAF/IA regional division (four-letter level), before approval, to ensure no political concerns exist that would prevent the flight. Contact SAF/IAR(_) on the Global address list at **saf.iar_@pentagon.af.mil** (blank space is for SAF/IA Regional Division: A for AFRICOM, C for CENTCOM, E for EUCOM, L for NORTHCOM/SOUTHCOM, P for PACOM).

6. This authorization does not include transportation to or from the exercise area or supporting flights utilized for logistics purposes only.

7. Does not include spouses of government personnel, non-DoD Federal officials, or members of Congress and their staffs.

8. For foreign students enrolled in USAF Academy or ROTC programs, ensure foreign disclosure requirements (AFI 16-201) concerning visit authorizations and disclosure of USAF information are satisfied.

9. This is not intended to allow all Government contractor employees to fly. The contractors must be performing work in direct support of the approving command (aircrew training system and aircraft maintenance contractors are the most frequent participants). Normally, the requirement for familiarization flights should be specified in the government contract.

10. Foreign citizens are not included in DoD 4515.13-R as passengers eligible for orientation flights.

11. For youth in Congressionally sanctioned, DoD-approved Youth Programs, program

participants may take part in no more than one orientation flight (Ref DoD 4515.13-R, Chapter 4). Parental and/or guardian permission is required and the flight must be approved by SAF/PA. Specific Public Law guidance applies, including Title 10 United States Code (USC), Section 2012, and Title 32 USC, Section 508.

12. Passengers on orientation flights under 18 years of age require parental approval in writing.

13. Requests for exception to policy must be submitted through command channels according to DoD 4515.13-R, Chapter 10, and AFI 24-101. ***Note:*** Exception to policy authority delegated from AF/CC to AF/CV IAW AFI 24-101. Send exception to policy requests to AF/A3/5 with an info copy to AF/A3O-AT.

14. Cadets and midshipmen are authorized orientation flights while on leave status.

15. Aircrew members in suspended (ASC 04) or DNIF status are not authorized familiarization/ orientation or incentive flights without an approved waiver from AF/A3O-AT.

Table 1.1. (PACAF) Orientation Flight Approval Authorities (by Type of Flight)

Line	Type of Flight	Authorized Participants	Authority
8	Familiarization orientation flight	Foreign military (Colonel equivalent and below or civilian equivalent) (See note 5 in the basic)	PACAF/CC delegates to NAF/CC
12A	Familiarization orientation flight	Active –duty and Reserve Component military (0-6 and below) and DOD civilian equivalent (See note 15 in the basic AFI)	PACAF/A3/5 delegates to WG/CC, or equivalent, owning the aircraft (except in the case of Note 3 of basic instruction)
12B	Familiarization orientation flight	Active –duty and Reserve Component military (0-7 and above) and DOD civilian equivalent. (See note 15 in the basic AFI)	PACAF/A3/5(Note 2)
13	Familiarization orientation flight	Service Academy and ROTC cadets and midshipmen (See notes 8 and 14 in the basic AFI)	PACAF/A3/5 delegates to WG/CC, or equivalent, owning the aircraft (except in the case of Note 3 of the basic instruction)
14	Familiarization orientation flight	Junior ROTC, Civil Air Patrol, Explorer Scouts (See note 12 in the basic AFI)	PACAF/A3/5 delegates to WG/CC, or equivalent, owning the aircraft (except in the case of Note 3 of the basic instruction)
15	Familiarization orientation flight	FAA employees (comply with DoD 4515.13-R, Chapter 4)	PACAF/A3/5 delegates to WG/CC, or equivalent, owning the aircraft (except in the case of Note 3 of the basic instruction)
16	Familiarization orientation flight	Civilian employees or DoD contractors (See Note 9 in the basic AFI)	PACAF/A3/5 delegates to WG/CC, or equivalent, owning the aircraft (except in the case of Note 3 of the basic instruction)

17	Familiarization orientation flight	Youth in Congressionally sanctioned, DOD-approved Youth Programs (See notes 10, 11 and 12 in the basic AFI)	PACAF/A3/5 delegates to WG/CC, or equivalent, owning the aircraft (except in the case of Note 3 of the basic AFI)
18	Incentive Orientation flight	USAF active-duty and ARC military members (See note 15 and paragraph 1.9.4.7.1.3. in the basic AFI)	PACAF/A3/5 delegates to WG/CC, or equivalent, owning the aircraft (except in the case of Note 3 of the basic instruction)
19	Spouse Orientation flight	Spouse of US active-duty and ARC military members (Cargo/Transport-series A/C only) (See paragraph 1.9.4.7.1.4. in the basic AFI)	PACAF/A3/5 delegates to WG/CC, or equivalent, owning the aircraft (except in the case of Note 3 of the basic instruction)
CAUTION: During contingency operations or in any designated combat or imminent danger zone, orientation flights may only be flown if the mission aircraft continuously remains outside of hostile airspace. Conduct all flights in this category to prevent exposure to any unnecessary risk, or inadvertently authorize entitlement to hostile fire or imminent danger pay. These restrictions apply to all categories of orientation flights. Furthermore, unit incentive flights may only be flown on designated training sorties.			

1.10. Authorization to Perform Inflight Duties in Air Force Aircraft.

1.10.1. To perform inflight or parachutist duties, members must be specifically authorized and required for the mission, physically qualified, and current in physiological training when required IAW AFI 11-403, *Aerospace Physiological Training Program*. (***Note:*** See AFI 11-202V1 for guidance regarding physiological training requirements if member will be removed from flying status within four months following the expiration date of physiological training currency.) Unit commanders will restrict individuals from performing inflight duties in the unit assigned aircraft when such performance may adversely impact safety, morale, or mission accomplishment. Commanders (including unit commanders) may authorize the following personnel to perform aircrew duties (as part of the authorized crew complement IAW AFI 65-503, or required for the mission, IAW paragraph **3.2.1.5** of this instruction) and operational support duties (IAW AFI 11-402) on board or supporting Air Force aircraft:

NOTES:

1. For guidance applicable to parachutist members performing duties in Air Force aircraft, see AFI 11-410.

2. An aircrew member, non-interference RPA sensor operator (1N1XX), or parachutist in DNIF status will not perform inflight aircrew or parachutist duties.

3. If not otherwise restricted by AF Form 1042 or MAJCOM guidance, aircrew members in DNIF status may perform aircrew duties in the simulator for which they are qualified.

1.10.1.1. Qualified members of US military services who hold a current aeronautical rating or aviation badge, are on active AOs to take part in frequent and regular flights, and are within the authorized crew complement (AFI 65-503) for the aircraft or are required for the mission.

1.10.1.1.1. Aircrew members will perform duty associated with their current aeronautical rating and aircrew qualification, unless ordered to perform mission-essential rated duties outside their normal aircrew specialty in direct support of MAJCOM (or equivalent) -approved operations. Flying solely for the purpose of qualifying for incentive pay or OFDA credit is not authorized.

1.10.1.1.2. When members are ordered to perform rated duties outside their current aeronautical rating and aircrew qualification, commanders will ensure members are trained and qualified to perform other rated duties. Commanders will provide a memorandum to the member's servicing HARM office with justification for the action. HARM personnel will file this memorandum permanently in the member's FRF and change the member's crew position to Y in ARMS (see also **Table A2.3**). See AFI 11-421 for specific HARM actions.

1.10.1.2. Qualified non-rated officers and enlisted personnel of US military services on AOs, who are required to perform mission essential inflight duties on a full time basis, and are within the authorized crew complement (AFI 65-503) for the aircraft or are required for the mission.

1.10.1.2.1. Aircrew members will perform duty associated with their current aircrew specialty and aircrew qualification. Flying solely for the purpose of qualifying for incentive pay or OFDA credit is not authorized.

1.10.1.3. Operational support fliers on AOs and required to perform specific inflight duties on an occasional basis that cannot be accomplished by regularly assigned crew members, and other non-rated/non-CEA members on non-interference AOs (paragraphs **2.10.3** and **2.10.4**) who fly occasionally to perform specific official inflight tasks.

1.10.1.3.1. Flying solely for the purpose of qualifying for Hazardous Duty Incentive Pay is not authorized.

1.10.1.4. Personnel authorized by competent authority to receive instruction in aircrew duties at Air Force schools.

1.10.1.5. Professionally qualified civilian employees of the US Government.

1.10.1.5. **(PACAF)** U.S. Government civilian employees will meet the same proficiency, currency, and medical standards as military members in like positions. Flying must be specified in the member's current duty position description (PD) or AF Core Document (CD). Create civilian employees in ARMS as a dummy record utilizing the appropriate NUSIC code as their social security number. The HARM will publish an AF Form 1887, *Aeronautical Order (PA)Aviation Service* for these personnel with no ASC. US Government civilian employee flying time will not be entered in ARMS. Only maintain training information in ARMS on civilian employees.

1.10.1.5.1. MAJCOM commanders determine individual qualifications. May be delegated to MAJCOM/A3.

1.10.1.6. Qualified employees or prospective employees of a government contractor according to the terms and conditions of a current government contract.

1.10.1.6.1. Unless otherwise directed, MAJCOM commanders determine individual qualifications. May be delegated to MAJCOM/A3.

1.10.1.6.2. The Squadron Aviation Resource Management office will keep a copy of the contract on file. HARM offices may enter government contractors in ARMS for the purpose of tracking aircrew training and physical/physiological qualifications when the member will perform flying duties on a frequent basis. Updating and tracking flying time in ARMS is not authorized.

1.10.1.7. Foreign nationals according to **Section 1C** of this instruction.

1.10.1.8. Cadets assigned to the US Air Force Academy, Air Force Reserve Officer Training Corps (ROTC) cadets, Uniformed Services University of Health Sciences (USUHS) and Health Professions Scholarship Program (HPSP) students participating in aviation related activities; and Civil Air Patrol (CAP) cadets authorized to participate in flying duties as observers, in a special training status, on missions as determined by the MAJCOM.

1.10.1.8. **(PACAF)** In PACAF, cadets in this category are authorized to participate in any normal training mission provided they have a current flight physical and physiological training. Individuals are further required to complete applicable Aircrew Flight Equipment/egress training before flight. HARM office will publish an AF Form 1887 for cadets, but will not enter them into ARMS.

1.10.1.8.1. HARM offices will publish AOs for such cadets or students. Neither flying incentive pay nor flying duty credit is authorized, nor will aviation service dates be established.

1.10.1.8.2. Cadet training sorties prescribed in paragraph **1.10.1.8** are not orientation sorties. Observer sorties may be conducted IAW all regularly-scheduled sorties and are not restricted to the local flying area. They may be flown in conjunction with student training and IP continuation training sorties, as well as IAW direct support flights, but may not be flown on functional check flight (FCF) or operational check flight (OCF) sorties.

1.10.1.8.3. The purpose of cadet training sorties is to introduce cadets to USAF flying operations and motivate cadets to consider a career as a rated aircrew member. As such, all normally-permitted training events, to include touch and go landings, aerobatics, air combat maneuvering, air refueling, and low level training, are authorized. An IP must be at the controls during all critical phases of flight on cadet training sorties.

1.10.1.9. Cadets assigned to the US Air Force Academy and Air Force ROTC cadets enrolled in approved USAFA flying programs are accorded aircrew status while actively participating in such programs.

1.10.1.9.1. Cadets will be placed on an AF Form 1887, *Aeronautical Order Aviation Service*, authorizing flying status while participating in approved USAFA flying programs. Cadets will not be entered into an operational ARMS database, an Aviation Service Code (ASC) will not be assigned, and an Aviation Service Date (ASD) will not be established. Neither flying incentive pay nor OFDA credit is authorized.

1.10.1.10. **(Added-PACAF)** General Officers (GO) may fly in one of two distinct categories: (1) General Officer Operational Flying positions, and (2) Indoctrination Flying positions. General officers in the first category maintain a qualification per AFI 11-202, Vol 1. General officers in the second category will not maintain aircraft qualification. Flying under indoctrination status is covered in AFI 11-401, paragraph 2.14.

1.10.2. Family members will not be assigned to airborne duty on the same aircraft for a given mission. Family member is defined as spouse, brother, sister, parent, and child.

1.10.2. **(PACAF)** HQ PACAF/A3/5 is the approval authority for family members performing airborne duty on the same aircraft for a given mission. Forward requests through command channels to PACAF/A3TC, 25 E. ST SUITE G-317, JBPH-H, HI 96853-5426.

1.10.2.1. MAJCOMs are authorized to waive this prohibition on a case-by-case basis, only when unusual conditions dictate.

1.10.2.2. Paragraph **1.10.2** does not preclude additional family members from traveling aboard an aircraft in a non aircrew-duty status, when such members are otherwise eligible for air transportation.

1.11. Authorization to Perform Inflight Duties in Non-US Air Force Aircraft.

1.11.1. With MAJCOM approval, aircrew members in active flying positions, and authorized operational support personnel, may perform appropriate duties in non-US Air Force aircraft if it is in the interest of the US Government, approved by the authority that controls the aircraft, the members are qualified or are authorized to receive training prior to qualification and, if applicable, licensed to perform such duties. Prior to authorizing these missions, MAJCOMs will ensure a valid requirement for a USAF aircrew member to operationally fly exists, which cannot be accomplished in USAF aircraft. For operational support flying, justification must show that qualified aircrew or operational support personnel of other (non-US Air Force) services or applicable organizations cannot perform such duties. Requests to fly solely for the purpose of qualifying for incentive pay or OFDA credit will not be approved.

NOTES:

1. MAJCOMs will identify approval authorities in MAJCOM Supplements. Authority may be delegated below the MAJCOM level.

2. If the aircrew member is not assigned/attached to a MAJCOM for flying duties (such as a Combatant Command with a geographic area of responsibility), the Air Force air operations element within that organization will accomplish the MAJCOM function.

3. For members who attend flying training that includes flights in non-USAF aircraft, the orders directing such activity constitute MAJCOM approval and satisfy validation requirements for paragraph **1.11.1.** The member's servicing HARM office will file a copy of the orders in the

member's flight record folder as the source document for authorization to fly in non-USAF aircraft.

4. Aircrew members will perform duties associated with their current aeronautical rating and aircrew qualification, or when specifically authorized to perform mission-related observation or evaluation duties. If a waiver is required to accommodate unique requirements, submit request IAW paragraph **1.7.2.**

1.11.1. **(PACAF)** PACAF/A3TC is the OPR for processing requests to perform in-flight duties in non-USAF aircraft if it is in the best interest of the US Government, approved by the authority that controls the aircraft, and the members are qualified and, if applicable, licensed to perform such duties. Approval authority is PACAF/A3T. Request must be received at least three weeks prior to the proposed flight. Requests not received within the specified time period run the risk of not getting approved. Blanket authorization request will be entertained on a case-by-case basis. The Wing Commander is responsible for the line of duty determination.

1.11.1.1. **(Added-PACAF)** Qualified Pararescue and Combat Rescue Officer personnel (X-coded) are authorized to perform in-flight duties and maintain flying currency on foreign and sister service aircraft they are current and qualified on when in performance of their assigned duties. Current and qualified is defined as having a current physical, aeronautical orders, current AF Form 4324, *Aircraft Assignment/Aircrew Qualification Worksheet*, with aircraft assignment, a closed book test with questions covering the foreign or sister-service aircraft, and egress completed. For logging time on aircraft not listed on the member's current AF Form 4324, the member must provide a mission requirement letter IAW Attachment 11 of this supplement (signed by the sister service or Foreign Flying Unit CC and approved by the CJSOAC or member's group commander) referencing the reason(s) the member was required for the mission and listing the member's current qualification in that specific aircraft. If not qualified, members must log "XJ" and other time. An AF Form 4324 (depicting aircrew certification for that aircraft) and an AF Form 1522, *ARMS Additional Training Accomplishment Report* (showing egress and other qualifications) are required.

1.11.1.2. **(Added-PACAF)** PACAF Flight Surgeons, assigned to an API-5 coded position may perform in-flight duties in non-USAF aircraft under any of the following circumstance:

1.11.1.2.1. **(Added-PACAF)** Sister service, or other allied aircraft/crew where the local PACAF flight medicine element routinely provides medical support to non-USAF crew members IAW the terms of an existing support agreement.

1.11.1.2.2. **(Added-PACAF)** PACAF Flight Surgeons participating in a joint service or multi-nation exercise (e.g., COPE TIGER, RED FLAG ALASKA) and required to provide routine medical support to non-USAF crew members.

1.11.1.2.3. **(Added-PACAF)** PACAF Flight Surgeon deployed to forward locations in support of real world operations (e.g., OPERATION ENDURING FREEDOM/NEW DAWN) and required to provide routine medical support to non-USAF crew members.

1.11.1.3. **(Added-PACAF)** Aeromedical Evacuation Flight Nurses and Technicians assigned to the 18 AES are approved to participate in a C-130 training mission with the 1st Marine Aircraft Wing (MAW) to maintain proficiency if all attempts have been exhausted and are unable to complete a flight for over 30 days on an USAF C-130. Back-to-back training flights in the Marine C-130 are not authorized unless another 30 days has elapsed.

1.11.2. Performing duties in non-US Air Force aircraft does not remove military personnel from line-of-duty determination status. When aircrew members are not assigned to API 7 or API G coded positions, MAJCOMs will provide the member's HARM office with a letter of justification authorizing the member to perform official aircrew duties in non-US Air Force aircraft and log flying time IAW paragraph **3.2** HARM offices will use this letter as the source document to assign an appropriate aircrew qualification code IAW AFI 11-421.

1.11.3. **Orientation Flights in Non-US Air Force Aircraft.** MAJCOMs may authorize orientation flights in non-US Air Force aircraft for individuals within their command who are otherwise eligible to fly on US Government aircraft. This authority may be delegated, but not lower than wing commander or equivalent level. Prior to authorizing such flights, approving authorities will ensure a valid requirement exists. Obtain approval from the appropriate authority that controls the non-USAF aircraft. The approving office will clearly indicate to the non-USAF controlling authority and the foreign government (as applicable) that acceptance of an orientation flight does not imply that the USAF/US Government will extend a reciprocal invitation to non-USAF or foreign government (as applicable) personnel. Individuals will not log flight time on orientation flights. Flights do not satisfy flight pay or OFDA requirements.

1.11.3. **(PACAF)** Orientation flights in Non-US Air Force Aircraft. PACAF/A3T is the approval authority for NAF/CCs and all members of HQ PACAF staff. PACAF/A3TC is the OPR for processing requests (NAF/CCs and members of HQ PACAF staff) to participate in orientation flights on non-USAF aircraft. Request must be received at least three weeks prior to the proposed flight. Requests not received within the specified time period runs the risk of not getting approved. Approval authority within the NAF and wings (or equivalent) is delegated as follows:

1.11.3.1. **(Added-PACAF)** NAF/CC (may be delegated to NAF/A3) is approval authority for their staff and all WG/CCs under their command.

1.11.3.2. **(Added-PACAF)** WG/CC (or equivalent) is approval authority for members within their command.

1.11.3.3. **(Added-PACAF)** While performing official duties during joint exercises, PACAF aircrew members are authorized to participate in orientation flights in aircraft belonging to the host nation. Commanders will ensure a valid requirement exists; participation in such flights is in the best interest of the Air Force and authorization does not imply reciprocal flights in PACAF aircraft. Approval for such flights is delegated to the Wing Commander of the individual receiving the flight, with the concurrence of the commander of the unit offering the flight.

1.11.4. **USAF Exchange Personnel.** See AFI 16-107, *Military Personnel Exchange Program*, for additional guidance regarding USAF exchange personnel flying with foreign air forces.

1.12. Requirements for Pilots in Dual Controlled Aircraft.

1.12.1. Every flight in a dual-controlled aircraft requires two pilots with current qualification in the aircraft. Anytime an individual not fully qualified in the specific mission-design-series (MDS) occupies a pilot's seat with a set of controls, a current and qualified instructor pilot will occupy the other seat. ***EXCEPTIONS:***

1.12.1.1. If operational, command mission requirements, or MDS-specific instructions dictate that these requirements are not practical.

1.12.1.2. To accommodate training programs for checkout or continuation programs.

1.12.1.3. If the crew composition requires another rated specialty (such as a weapons system officer).

1.12.1.4. To accommodate established programs.

1.12.1.5. Flight surgeons and MAJCOM-designated Flight Test Engineers who take part in flights in dual-controlled aircraft, IAW mission requirements.

1.12.2. At no time will an individual who is not fully qualified as a pilot in the specific type aircraft being flown occupy any pilot's seat (with a set of controls) with passengers on board the aircraft. For general officer flying, waiver authority to this guidance is AF/CC. ***EXCEPTIONS:***

1.12.2.1. To accommodate training objectives required by formal training programs. This exception allows passengers, who are an integral part of the mission (e.g., Pararescue, Rangers, CCT, SEALs, etc.) and when their presence is required by the training syllabus, to be on board the aircraft. During such times, a current and qualified instructor pilot will occupy the other pilot's seat.

1.12.2.2. In order to accommodate training objectives or mission requirements, pilots (including non-current or unqualified pilots) and other aircrew members, when their presence is required by the training syllabus, authorized to obtain and maintain qualification in a particular MDS aircraft may occupy a pilot's seat for purposes of conducting training or accomplishing mission requirements when MEP are on board the aircraft.

1.12.2.2.1. During such times, if the pilot is non-current or unqualified, or another aircrew member is in a pilot's seat, a current and qualified instructor pilot will occupy the other pilot's seat.

1.12.2.3. See also paragraph **1.12.4** for additional ***EXCEPTIONS*** which apply to commanders, key supervisors, and general officers.

1.12.3. Dual-control aircraft designated in the aircraft flight manual for single pilot operations in IMC/VMC flight may be operated with a single pilot on passenger-carrying missions when operational or command mission requirements dictate that two pilots are not practical. In addition, the other pilot seat may be used for passengers and/or MEP as defined

and directed by the MAJCOM. Under no circumstances will a passenger or MEP be given control of the aircraft.

1.12.4. Pilots and other aircrew members not authorized to obtain or maintain aircraft qualification will not occupy a seat with a set of controls with passengers or MEP on board. ***EXCEPTIONS:***

1.12.4.1. Commanders and key supervisors who fly IAW paragraph **3.6.1** may fly in the seat, under instructor pilot supervision, with MEP on board.

1.12.4.2. During non-critical phases of flight, general officer commanders and key supervisors who fly IAW paragraph **3.6.1** may fly in the seat, under instructor pilot supervision, with passengers on board. See AFI 11-202, Volume 3, *General Flight Rules,* for definition of critical phases of flight.

1.12.4.3. General officer pilots in authorized indoctrination flying positions may occupy a pilot's seat with passengers or MEP on board during non-critical phases of flight. During such times a current and qualified instructor pilot will occupy the other pilot's seat. See AFI 11-202, Volume 3, for definition of critical phases of flight. (See also paragraph **2.14.5.1**.)

1.12.4.4. General officers not qualified as a pilot in the specific type aircraft being flown may fly in a pilot's seat to accomplish aircraft delivery flights and other approved flights, under the supervision of a current and qualified instructor pilot, with MEP on board the aircraft.

Section 1C—Flying by Military and Civilian Personnel of Foreign Nations in USAF Aircraft

1.13. Air Force Policy. The foreign military personnel listed below are authorized to take part in flights in US Air Force aircraft. Other foreign military personnel (for example, air attachés, other representatives of foreign air forces in Washington, D.C., Foreign Military Sales [FMS] personnel and Military Assistance Program [MAP] personnel) must be advised to obtain a waiver of flying requirements from their government for the duration of their tour in the continental United States (CONUS).

1.13.1. Foreign officers who serve in the US Air Force under the exchange program described in AFI 16-107 and are required to perform frequent and regular flights as part of their duties are given flying privileges according to this instruction.

1.13.2. Foreign military personnel who receive flight training at Air Force training installations are given flying privileges that correspond to their course of training.

1.13.3. Foreign military personnel assigned or attached to a US Air Force or a joint staff organization, whose duties require such flights as part of combined operations or exercises (such as Red Flag, Blue Flag, etc.).

1.13.4. In overseas commands, subject to approval of the proper commander and following the command administrative procedures, military personnel of friendly foreign nations may take part as aircrew members in flights of US Air Force aircraft operated by the MAJCOM, Defense Intelligence Agency (DIA), US Military Groups (USMILGP), Missions, and Military Assistance Advisory Groups (MAAG) when: the individual is physically, physiologically, professionally, and administratively qualified; a fully qualified US Air Force

pilot occupies a pilot position during aircraft operations; and when required by the MAJCOMs, DIA, USMILGP, Missions, or MAAG to help complete their mission.

1.13.5. Flights involving foreign nationals must be reviewed for foreign disclosure requirements, IAW AFI 16-201.

1.13.6. If not otherwise provided for in this instruction, other foreign military personnel stationed at CONUS installations whose duties require them to fly in US Air Force aircraft must request approval according to paragraph **1.16**

1.14. Flight Authorizations.

1.14.1. Air Force flying unit commanders may, within the preceding policy, authorize physically, physiologically, professionally, and administratively qualified military personnel of foreign nations to take part as aircrew members according to this instruction. Although foreign military personnel who take part in flying duties in US Air Force aircraft do not serve in command positions, exchange officers, FMS personnel, and MAP trainees may serve as pilot in command of single-place, multi-place, or formations of aircraft provided they qualify for such duty according to the standards set for a US Air Force pilot.

1.14.2. Foreign military personnel must have official flying records and medical certifications in their possession when they request flight duties in US Air Force aircraft or report to a flying unit for these duties. After the request for flying is approved, the applicant must fulfill US Air Force physiological training requirements before flying.

1.14.2.1. Foreign military aircrew will be placed in the US Air Force Preventive Health Assessment cycle IAW AFI 44-170. Medical grounding management will be analogous to US Air Force standards. However, IAW NATO Standardization Agreement (STANAG) 3526 Aeromedical Working Group document (AMD) and Air Standardization Coordinating Committee (ASCC) agreements, NATO and ASCC allies' home nations will maintain waiver authority unless otherwise delegated in a Memorandum of Understanding.

1.14.3. Flights will be at the minimum level of difficulty consistent with performance of assigned duties. When possible, flights will not exceed either the monthly minimum for pay and currency required by the individual's country or the training level specified in the applicable MDS-specific aircrew training publications, whichever is greater.

1.15. Procedures for Processing Requests that Require HQ USAF Approval.

1.15.1. Except as provided in paragraphs **1.13** and **1.14**, foreign military personnel with requirements for frequent flights for career or service status purposes, or operational needs, must submit a written request through the local base flight management activity and the proper MAJCOM to SAF/IAPD, Foreign Disclosure, Weapon Systems, and Technology Transfer Division, 1080 Air Force Pentagon, Washington DC 20330-1080, in turn. The letter must include:

1.15.1.1. The name, grade, service identification number, and duty status of the applicant.

1.15.1.2. Certification of flight status, including rating and date of rating.

1.15.1.3. A brief summary of the individual's flight history including types of aircraft and number of hours per type aircraft the applicant has flown, date of last flight, and inclusive dates of last 100 hours of flying time.

1.15.1.4. The minimum monthly and annual flight requirements of his or her country.

1.15.1.5. A statement that the applicant is required by his or her air service to fly in order to keep rated status, to avoid jeopardizing service or career status, and to meet flight requirements for pay purposes, and that such flight requirements cannot be waived by the service authorities of his or her country.

1.15.1.6. A statement that US Air Force aircrew members are authorized reciprocal privileges in the applicant's country.

1.15.2. The Air Force flying unit to which the applicant will be attached will verify that the member's flight records are accurate. The unit will affirm capability to absorb the applicant within the unit flying program.

1.15.3. The MAJCOM to which the applicant will be attached will review the request and send it to SAF/IAPD with comments and recommendations.

1.15.4. SAF/IAPD requests the foreign air attaché in Washington, DC to verify the information on the request and the applicant's statement of flying requirements, to advise if requirements can be waived (when necessary), and to affirm reciprocal flying privileges for US Air Force personnel. With this information, SAF/IAPD approves or disapproves the request, subject to concurrence by HQ USAF A3O-A and the gaining MAJCOM, then advises the foreign attaché and the applicant.

1.16. Requests for Exception. Submit requests concerning foreign personnel to take part in flights in USAF aircraft under conditions other than provided in this instruction or DoD 4515.13-R to AF/A3O-A with an info copy to AF/A3O-AT, IAW paragraph **1.7.2**

1.16.1. MAJCOM and FOA commanders may approve orientation flights for foreign military or civilian equivalents within their area of responsibility, according to **Table 1.1**, provided all foreign disclosure requirements (AFI 16-201) concerning visit authorizations and disclosure of USAF information are satisfied.

Chapter 2

AVIATION RESOURCE MANAGEMENT POLICIES

Section 2A—Flying Program

2.1. Rated Officer and Career Enlisted Aviator (CEA) Flying Program. The rated officer and CEA inventory requires close management at all levels to ensure a high state of readiness is maintained with available resources. The authorized rated inventory includes pilots, navigators/combat systems officers (CSO) and air battle managers (ABM) in the grade of lieutenant colonel and below. To manage these as well as other rated/CEA aircrew positions, API codes are assigned to identify these positions. ***Note:*** API codes 1-0 apply to all rated officers, and codes A-Z apply to CEA personnel (**Table 2.1**).

Table 2.1. Aircrew Position Indicator (API) Codes (Note 8).

API Codes	Explanation	Remarks
1	Pilot positions used primarily for cockpit duty.	See Note 1
2	Navigator/combat systems officer or observer positions used primarily for cockpit duty.	See Note 1
3	Staff or supervisory positions at wing level and below that have responsibilities and duties that require rated expertise but which do not require the incumbent to fly.	See Note 2
4	Staff or supervisory positions above wing level that have responsibilities and duties that require rated expertise but which do not require the incumbent to fly.	See Note 2
5	Flight surgeon positions. This code is restricted to AFSC 48XX, or 40C0C with an additional AFSC of 48XX.	See Notes 3, 4, and 5
6	Staff or supervisory positions at wing level and below that have responsibilities and duties that require the incumbents to actively fly or perform OFDA-creditable ground based radar duties.	See Notes 2, 3 and 4
7	USAF officers not occupying a USAF rated position, but assigned to active flying duties in other than USAF units (exchange officers, etc.). Reserved for use only when directed by AF/A3O-AT.	See Note 6
8	Staff or supervisory positions above wing level that have responsibilities and duties that require the incumbent to actively fly or perform OFDA-creditable ground based radar duties.	See Notes 2, 3 and 4
9	Air Battle Managers who are required to fly operationally or perform OFDA-creditable ground based radar duties.	Note 9
0	Rated officers assigned to non-rated duties and all non-rated	See Note 7

	officers.	
A	CEA positions used for line flying unit with Primary Mission Assigned Inventory (PMAI) aircraft assigned.	See Note 1
B	Staff or supervisory positions at wing level and below that have responsibilities and duties that require the incumbent to actively fly.	See Notes 2, 3, and 4
C	Staff or supervisory positions at wing level and below that have responsibilities and duties that require aircrew expertise but which do not require the incumbent to actively fly.	See Note 2
D	Staff or supervisory positions above wing level that have responsibilities and duties that require the incumbent to fly.	See Notes 2, 3, and 4
E	Staff or supervisory positions above wing level that have responsibilities and duties that require aircrew expertise but which do not require the incumbent to actively fly.	See Note 2
F	Crewmembers assigned to positions for OT&E, IOT&E, and FMS.	See Note 4
G	CEA not occupying a USAF position, but assigned to active flying duties in other than USAF units (exchange programs, etc.). Reserved for use only when directed by AF/A3O-AT.	See Note 6
Z	Enlisted personnel not assigned to CEA duties and all non-CEA enlisted.	See Note 7

NOTES:

1. APIs 1, 2, and A are for officers and CEAs assigned to line flying positions or assigned to formal flying training programs. The primary duty of these crewmembers is flying.
2. API 3, 4, 6, 8, B, C, D, and E identify crewmembers assigned to supervisory or staff positions. These positions require aircrew expertise (API 3, 4, 6, 8, B, D, and E) and some require active flying (API 6, 8, B, and D) or ground based radar duties (API 6, 8).
3. If more than one crewmember is assigned to an API-5, 6, 8, B, and D position, only the primary designated incumbent will be assigned an active FAC/FSC code and fly. The MAJCOM/SGPA or higher will determine which flight surgeons are designated as the primary incumbent.
4. If replacement of the primary incumbent is necessary (for example, PCS, permanent change of assignment, etc.), the replacement may also be authorized an active FAC/FSC code, provided the overlap is not more than 30 days. (Reference paragraph **1.4.2.1.**)
5. Qualified medical officers assigned to flight surgeon and pilot-physician, when not assigned to an operational flying squadron as a primary line flier, positions.
6. Officers/CEAs assigned to flying positions outside of USAF or duties requiring active flying with foreign services.
7. API 0 and Z identify non-rated/non-CEA positions.

8. Do not assign an API code to separated (FSC P) or retired (FSC R) aircrew members. HARM offices will leave the API block on the AF Form 1887 blank for these individuals.

9. API 9 is for ABMs assigned to: 1) line flying positions, 2) formal flying training programs where the primary duty is operational flying, or 3) OFDA-creditable ground based radar duties.

2.2. Flying Activity Codes. Flying Activity Codes (FAC) detail the active or inactive flying activity for each duty position occupied by rated officers and CEAs (**Table 2.2**).

Table 2.2. Flying Activity Codes (FAC) (See Note below).

Flying Activity Codes	Approval Authority	Explanation
1	**HARM**	**Force.** Officers in API 1, 2, 5, 7, and 9 coded positions not associated with formal flying training.
2	**HARM**	Instructors, supervisors, and students (API 1, 2, 6, 8, and 9) assigned to fly TF coded aircraft or training aircraft assigned to Formal Training Units or equivalent.
3	**HARM**	**Operational Supervisor.** Officers in API 6, 7, or 8 coded positions not associated with formal flying training who actively fly.
4	**AF/A3O-AT**	**Rated Supervisor.** Officers in API 3 or 4 coded positions assigned and performing aircrew duties in direct support of certain Secretary of the Air Force approved flying missions.
5	**AF/A3O-AT**	Officers not assigned to a rated position (API 0) who perform aircrew duties in direct support of certain Secretary of the Air Force approved flying missions.
6	**MAJCOM/A3 (HARM)**	**Excepted Assignment.** Officers not eligible for FAC 1 through 5, whose current assignments require active temporary operational flying. MAJCOM/A3 approves the use of this code. ***EXCEPTION:*** Member's HARM office may assign FAC 6 to permit inactive aircrew to accomplish/maintain currency/qualification/ requalification training prior to reassignment to active flying (while still assigned to an inactive API). Member's HARM office may also assign FAC 6 for members assigned to inactive flying positions but deployed to an active flying slot. See AFI 11-421.
7	**HARM**	**Inactive.** Rated Officers in inactive status (API 3 or 4). ***EXCEPTION:*** UFT students in API 0 positions.
8	**HARM**	**Inactive.** Rated Officers/CEAs performing inflight non-crew or inactive RPA duties.
9	**AF/A3/5**	**Pilot-Physicians.** Awarded by AF/A3/5 based on AF/SG recommendation. AFI 11-405 applies. See also paragraph **2.8.3**.
	AF/A3O-AT	**Other.** Reserved for use only when directed by AF/A3O-AT.
0	**HARM**	Rated officers assigned to non-rated API 0 duties and not involving flying.
A	**HARM**	**Force.** CEAs in API A or G coded positions not associated with formal flying training.
B	**HARM**	Instructors, supervisors, and students (API A, B, or D) assigned to fly

		TF coded aircraft or training aircraft assigned to formal training units or equivalent.
C	**HARM**	**Operational Supervisor.** CEAs in API B, D or G coded positions not associated with formal flying training who actively fly.
D	**HARM**	CEAs assigned to AETC non-flying formal school position. (API C).
E	**MAJCOM/A3 (HARM)**	**Excepted Assignment.** CEAs not eligible for FAC A, B, C, or D, whose current assignment requires active temporary operational flying. MAJCOM/A3 approves the use of this code. ***EXCEPTIONS:*** Member's HARM office may assign FAC E to permit inactive aircrew to accomplish/maintain currency/qualification/ requalification training prior to reassignment to active flying (while still assigned to an inactive API). Member's HARM office may also assign FAC E for CEAs assigned to inactive flying positions but deployed to an active flying slot. See AFI 11-421.
F	**HARM**	CEAs assigned to OT&E, IOT&E, and FMS positions (API F).
G	**HARM**	**Inactive.** CEAs in inactive status (API C, E, and Z).
H	**AF/A3O-AT**	**Other.** CEAs in 9G100 positions approved for operational or indoctrination flying IAW AFI 11-402. Other use only as directed by HQ USAF/A3O-AT.
Note: Do not assign a FAC to separated (FSC P) or retired (FSC R) aircrew members. For these individuals, HARM offices will leave the FAC block blank on the AF Form 1887.		

2.3. Aviation Service Codes (ASC). ASCs are two-character codes that indicate incentive pay entitlement and flying status. The first character of the ASC is the entitlement status code (ESC) (**Table 2.3**and **Table 2.4**) and identifies Aviation Career Incentive Pay (ACIP), Career Enlisted Flyer Incentive Pay (CEFIP), or Hazardous Duty Incentive Pay (HDIP) entitlement status. The second character is the Flying Status Code (FSC) and identifies the current flying status. The second character is numeric when the flier is disqualified or suspended (see **Table 2.5**) or an alpha character for qualified individuals (see **Table 2.6**). **Figure 2.1** and **Figure 2.2** indicate ACIP and CEFIP entitlement status, respectively.

Table 2.3. ASC First Character (Entitlement Status Code [ESC], Rated Officers).

Entitlement Status Code (First Character)	
1	Continuous ACIP (0 to 12 years). A rated or student pilot, navigator, ABM, or observer who has up to 12 years of aviation service.
2	Continuous ACIP (12 to 18 years). A pilot, navigator, ABM, or observer who has from 12 to 18 years aviation service and has performed operational flying duties for at least 8 of the first 12 years of aviation service.
3	Continuous ACIP (18 to 25 years). A pilot, navigator, ABM, or observer who has 18 or more years of aviation service and has performed operational flying/ground-based radar duties for at least 12 of the first 18 years of aviation service. ***Note:*** ABM must have 72 months of operational flying duties. See paragraph **2.5.3.1.1.**
4	Continuous ACIP (18 to 22 years). A pilot, navigator, ABM, or observer who has 18 or more years of aviation service and has performed operational flying/ground-based radar duties for at least 10, but less than 12 years of the first 18 years of aviation service. ***Note:*** ABM must have 72 months of operational flying duties. See paragraph **2.5.3.1.1.**
5	Conditional ACIP (12 to 18 years). A pilot, navigator, ABM, or observer who has from 12 to 18 years of aviation service and who did not perform operational flying duties for at least 8 of the first 12 years of aviation service. This officer must meet DoDFMR flying requirements to be entitled to receive ACIP. (Note)
6	Conditional ACIP (18 to 25 years). A pilot, navigator, ABM, or observer who has completed 18 years of aviation service and did not perform operational flying duties for at least 10 of the first 18 years of aviation service; or a pilot, navigator, or observer who has completed 22 years of aviation service and did not perform operational flying duties for at least 12 of the first 18 years of aviation service. This officer must meet DoDFMR flying requirements to be entitled to receive ACIP. (Note)
7	Continuous ACIP terminated (25 years of aviation service). A rated officer (other than a flight surgeon) who has completed 25 years of aviation service. Officers in this status are not entitled to receive continuous ACIP, but may be entitled to receive conditional ACIP if assigned to operational flying duties and the grade is O-6 or below. General officers assigned to operational flying duties may qualify for HDIP under DoDFMR flying requirements.
8	Conditional ACIP (Medical). A flight surgeon ordered to participate in frequent and regular aerial flights, assigned to duties requiring such participation (API-5 position), and qualifies for conditional ACIP under DoDFMR flying requirements.
9	Conditional HDIP. A non-rated/non-CEA crewmember or operational support member ordered to participate in frequent and regular aerial flights or assigned to parachute duty, and who qualifies for conditional HDIP under DoDFMR flying or jump requirements. ***EXCEPTION:*** RPA sensor operators (1N1XX) are not authorized conditional HDIP.
0	Disqualified, Suspended, or Non-Interference Flier (No ACIP/HDIP authorized). An

	individual disqualified or suspended from aviation/parachutist service according to AFI 11-402, or a non-aircrew member assigned to non-interference flying duties IAW paragraph **2.10.4** of this instruction.
Note: The DoDFMR flight requirement for conditional status fliers is four hours per month for active duty members and two hours per month for Air Reserve Component (ARC) members or pro rata shares. (DoD 7000.14-R, *Department of Defense Financial Management Regulations (FMRs)*, Volume 7A, *Military Pay Policy and Procedures – Active Duty and Reserve Pay*).	

Table 2.4. ASC First Character (Entitlement Status Code [ESC], Career Enlisted Aviators).

Entitlement Status Code (First Character)	
A	Continuous CEFIP (0 to 10 years). A CEA who has up to 10 years of aviation service.
B	Continuous CEFIP (10 to 15 years). A CEA who has 10 to 15 years of aviation service and has performed operational flying duties for at least 6 of the first 10 years of aviation service.
C	Continuous CEFIP (15 to 20 years). A CEA who has 15 to 20 years of aviation service and has performed operational flying duties for at least 9 of the first 15 years of aviation service.
D	Continuous CEFIP (20 to 25 years). A CEA who has 20 to 25 years of aviation service and has performed operational flying duties for at least 14 of the first 20 years of aviation service.
E	Conditional CEFIP (10 to 15 years). A CEA who has from 10 to 15 years of aviation service and who did not perform operational flying duties for at least 6 of the first 10 years of aviation service. This crewmember must meet the DoDFMR flight requirement to be entitled to receive CEFIP. (See note)
F	Conditional CEFIP (15 to 20 years). A CEA who has from 15 to 20 years of aviation service and who did not perform operational flying duties for at least 9 of the first 15 years of aviation service. This crewmember must meet the DoDFMR flight requirement to be entitled to receive CEFIP. (See note)
G	Conditional CEFIP (20 to 25 years). A CEA who has from 20 to 25 years of aviation service and who did not perform operational flying duties for at least 14 of the first 20 years of aviation service. This crewmember must meet the DoDFMR flight requirement to be entitled to receive CEFIP. (See note)
H	Continuous CEFIP terminated. A CEA who has completed 25 years of aviation service. This CEA is not entitled to receive continuous CEFIP, but may be entitled to receive conditional CEFIP if assigned to operational flying duties.
Note: The DoDFMR flight requirement is four hours per month for active duty members and two hours per month for Air Reserve Component (ARC) members or pro rata shares (DoD 7000.14-R, *Department of Defense Financial Management Regulations (FMRs)*, Volume 7A, *Military Pay Policy and Procedures – Active Duty and Reserve Pay*).	

Figure 2.1. ACIP Entitlement Status, (Rated Officers).

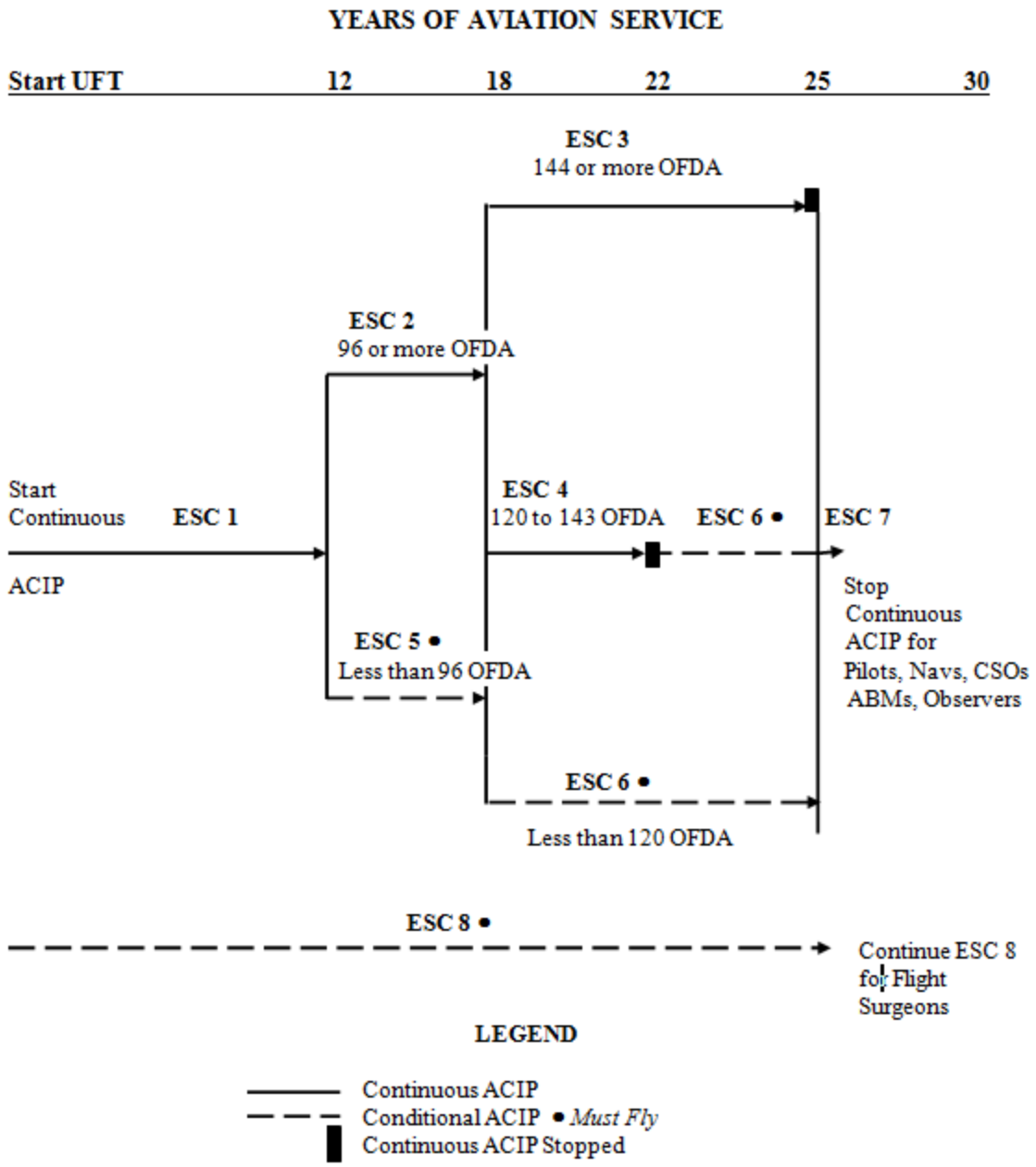

Figure 2.2. CEFIP Entitlement Status (Career Enlisted Aviators).

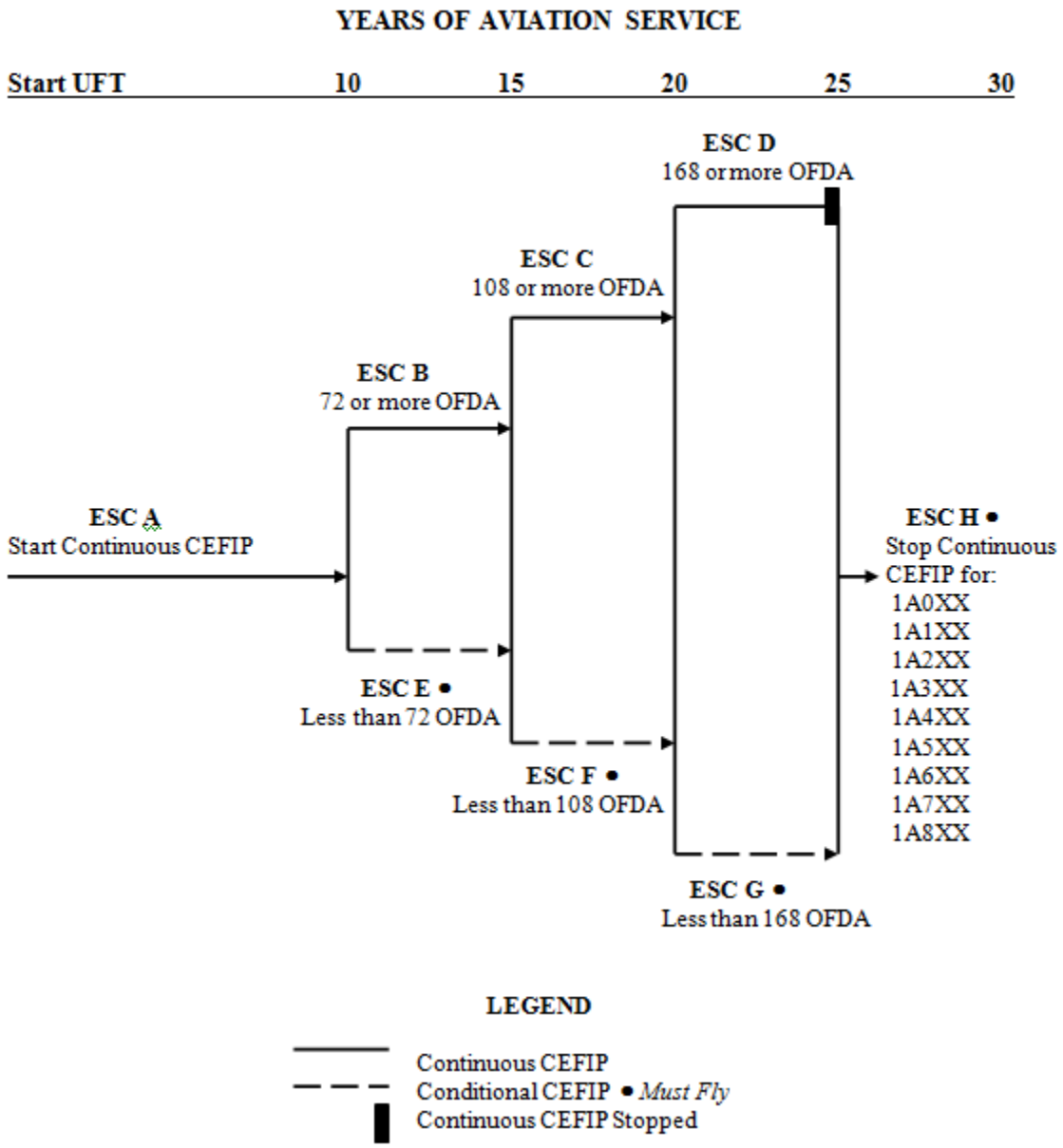

Table 2.5. ASC Second Character (Flying Status Code [FSC], Disqualified or Suspended Status).

ASC Second Character--Disqualified or Suspended Status (as defined in AFI 11-402)	
0	**Disqualified.** Administrative Reasons.
1	**Disqualified.** Fear of Flying.
2	Reserved for future use.
3	**Disqualified.** Medical disqualification.
4	**Suspended.** Permanent disqualification action pending. (HARM office will not assign for more than 180 days without MAJCOM approval.)
5	**Disqualified.** Flying Evaluation Board (FEB), or failure of non-rated/non-CEA aircrew member to attain aircrew qualification.
6	Flying (rated/CEA trainee and operational support) or jump requirement terminated. (Note)
7	**Disqualified**. Failure to maintain medical certification.
8	**Disqualified.** Voluntary request.
9	Air Force Educational Leave of Absence (AFELOA). (Includes excess leave program.)
Note: HARM offices will change a nonrated/non-CEA member's ASC from 9E to 06 when the member is no longer assigned to an authorized jump position (--as applicable, this includes the period during which enlisted parachutists attend Officer Training School). For members in ASC 9D authorized to perform both jump/fly duties and either is terminated, see **Table 2.6.**, Note 5.	

Table 2.6. ASC Second Character (Flying Status Code [FSC], Qualified Active and Inactive Flyer) (Note 1).

A	**Active-Operational Flying.** A rated officer or CEA assigned to operational flying duties (excluding Undergraduate Flying Training students), and aircrew members with approved FAC 4, 5, 6, and E and H waivers.
B	**Active-ABM Ground-Based Radar Duty.** An ABM assigned to OFDA-creditable ground-based radar duties.
C	**Active-Operational Support (Non-crewmember).** An individual required to perform essential in-flight non-crew duties (not considered rated, CEA, or other nonrated aircrew duties) that cannot be performed by an aircrew member in that aircraft's crew complement, IAW AFI 65-503.
D	**Active-Non-rated/Non-CEA Aircrew Member.** A qualified non-rated/non-CEA aircrew member authorized to perform aircrew duties IAW AFIs 65-503, 11-401 and 11-402. (Note 5.)
E	**Active-Parachutist.** A qualified non-rated/non-CEA member assigned to a valid jump DAFSC position, or in training leading to assignment against a valid jump DAFSC position, ordered to perform parachute jump duty. (Note 5.)
G	**Active-Grounded.** An aircrew member assigned to operational flying duties not involving flying for a period anticipated lasting over 30 days. Assignment to FSC G will not preclude reassigning the individual to FSC S when appropriate. (Note 2.)
H	**Inactive-Double Billeted.** Assign FSC H to a rated officer or CEA double billeted against an active staff API 5, 6, 8, B, or D position (see paragraph **1.4.2.1.** and **Table 2.1.,** Note 3). Assign FSC H to nonrated/non-CEA aircrew members double billeted against an active flying position in excess of 90 days. (See AFI 11-402).
J	**Inactive-Restricted.** Assign FSC J to an aircrew member restricted from active flying while assigned to a non-operational flying position (includes FAC 8 fliers.) This action terminates incentive pay entitlement for an aircrew member or parachutist in conditional incentive pay status. (Note 5.)
K	**Inactive-Lack of Support Capability-Restricted.** Aircrew member assigned to an active API who is not flying due to lack of support capability. (See paragraphs **1.3.5., 1.4.1.9.,** and **2.6.4**.)
L	**Inactive-School (Academic).** A crewmember/parachutist assigned to a non-flying/non-jumping course of instruction of lasting 180 days or longer. This action terminates incentive pay entitlement for an aircrew member or parachutist in conditional incentive pay status.
P	**Inactive-Separated.** An active duty or ARC rated officer or CEA removed from aviation service on separation from his or her respective service. (Note 4.)
R	**Inactive-Retired.** An active duty or ARC rated officer or CEA removed from aviation service on retirement from his or her respective service. (Note 4.)

S	**Inactive-Nonperformance.** A rated officer or CEA assigned to operational flying duties (paragraph **2.5.**) who did not accomplish OFDA requirements. (Note 3.) Unit commanders must have MAJCOM/A3T approval for members to remains in "S" status for longer than 180 days (except if member is DNIF). Copy of approval must be sent to the HARM office. Unit commanders must have MAJCOM/A3 approval for a rated officer or CEA assigned to operational flying duties to remain in "S" status for longer than 365 days. Ensure the HARM office receives a copy of the 180-day and/or 365-day "S" status approval, as applicable. ***Note:*** If the member is DNIF for longer than 365 days, see AFI 11-402.
T	**Inactive-Indoctrination Flier.** A rated officer or CEA incumbent assigned to an inactive rated/CEA position (or rated inventory "P" or "N" prefixed DAFSC) in a non-operational flying position approved to fly as an indoctrination flier. Not authorized for API 0 or Z, except as specified in paragraph **2.14.7**.
U	**Active-Flying Training Student (Undergraduate).** A medically qualified officer undergoing flying training leading to the award of an aeronautical rating or a career enlisted aviator undergoing flying training leading to the award of CEA badge.
V	Reserved for future use.
W	**Non-Interference Flier (Non-crewmember)**. Non-rated/non-CEA members, non-crew commanders placed on non-interference AOs IAW paragraph **2.10.4**. Includes RPA Sensor Operators (who hold 1N1XX DAFSC) and other members approved by AF/A3O-AT.
X	**Active-Pipeline.** An Undergraduate Flying Training (UFT) graduate from the date of graduation from pilot, CSO, Air Battle Manager, CEA, or observer training until the sign-in date at the operational duty assignment following completion of formal (Education and Training Course Announcements [ETCA]) primary aircraft training and has not successfully completed mission qualification in an MDS (non-Trainer AETC aircraft) or received an AF Form 8.
Z	**Active-Remotely Pilot Aircraft (RPA) Duties.** Pilot, navigator/CSO, ABM or CEAs (1AXXX or 1UXXX DAFSCs) assigned to an RPA approved by SecAF for OFDA credit and performing operational RPA duties.

NOTES:

1. The FSC indicates if a member is assigned to an active or inactive flying position and the reason for inactivity. Rated members assigned to mandatory rated flying duties must fly in an active status if otherwise qualified. If the unit commander determines that no flying support capability exists for these officers, assign an inactive FSC. All rated aircrew members assigned to non-flying duties or non-rated flying are restricted from active rated flying. MAJCOMs assign support-flying priorities according to paragraph **2.7.** when adequate resources are lacking.

2. ARMS automatically generates an FSC change for ASC G; no AO is required.

3. Do not process non-performance AOs (FSC S) for rated officers after 18 years of aviation service or CEAs after 20 years of aviation service. Refer to AFIs 11-202, Vol 1, and 11-402 flying evaluation board requirement procedures, for members assigned to active flying positions

who do not fly for extended periods for reasons within their control.

4. HARM offices will process an AO to assign FSC P or R effective the date of the separation or retirement orders, update ARMS, and terminate flight pay (if applicable). ARC members entering a PAS Code starting with S7 will be assigned FSC P or FSC R upon effective date of orders.

5. When nonrated/non-CEA members are assigned to a dual-coded flying/jump position, assign FSC D. When no longer assigned to the dual-coded jump/flying position, change the member's FSC from D to J. When a member is re-assigned from a dual-coded position to a jump DAFSC (or J prefixed position) only, change the member's FSC to E.

2.4. Operational Flying Duty. Operational flying duty is flying duty performed under competent orders while serving in assignments in which flying skills are maintained in the performance of assigned duties. The FY 1996 *National Defense Authorization Act* established current guidance for months of operational flying duty accumulation (OFDA) required for entitlement to continuous monthly incentive pay for specific years of aviation service. Current legal authority is established in the US Code. **Table 2.7** shows OFDA requirements.

Table 2.7. OFDA Requirements.

Act	OFDA Requirement/Milestone	Entitlement
NDAA of 1996	96 mos (12 yrs of aviation svc) See Note, below.	Continuous ACIP until 18 yrs of aviation service
	120 mos (18 yrs of aviation svc)	Continuous ACIP until 22 yrs from OSD/ASD
	144 mos (18 yrs of aviation svc)	Continuous ACIP until 25 yrs from OSD/ASD

Note: Transition Status Codes were established to track the OFDA requirements for rated officers affected by the *Aviation Career Incentive Act of 1974*, the *Aviation Career Improvement Act of 1989*, and the FY 1996 *National Defense Authorization Act*. TSC A is assigned to all officers who had less than 6 years of aviation service on 1 October 1991. For additional TSC guidance, reference instructions applicable when member's aviation service date was established. (Historic copies of AFI 11-401 are available from AF/A3O-AT.)

2.5. Rated Officer and Career Enlisted Aviator Operational Flying Duty. To control the award of operational flying duty credit required by public law, HARM offices must assign active operational fliers (FSC A) or ground-based radar duty (FSC B) who fail to perform flying or ground-based radar duty to a temporary status, FSC S (Inactive-Nonperformance) IAW paragraph **2.5.3.4** or **2.5.3.5**. FSC S will remain valid until: the member accomplishes an OFDA-creditable event; is disqualified for Aviation Service; or is reassigned to non-flying duty. Active rated officers and CEAs recommended for DNIF are identified in ARMS by a physical availability date and code. When the DNIF is expected to last more than 30 days or has lasted for 30 days, ARMS automatically reports the member on the Consolidated Headquarters Aviation Resource Management System interface as FSC G. (The FSC G is for reporting purposes only.) An AO change is not necessary. Members continue to accumulate OFDA credit until FSC S applies.

2.5.1. Operational event is flying or ground-based radar duty performed under competent orders by rated or designated members while serving in assignments in which basic flying skills are normally maintained in the performance of assigned duties as determined by the Secretary of the Air Force.

2.5.1.1. Operational flying includes members in training that leads to the award of an aeronautical rating or designation. Rated officers and CEAs must attain and maintain, as a minimum, basic aircraft qualification in mission or support aircraft. One of the following indicates the need to fly:

2.5.1.1.1. The assigned API code associated with a specific position.

2.5.1.1.2. Assignment to a formal course of flying instruction.

2.5.1.1.3. A case-by-case determination by AF/A3O-A when unusual circumstances dictate.

2.5.2. The requirement for the Air Force to track the flying activity of rated members is based on public law. The FY 99 *National Defense Authorization Act* NDAA changed the way ACIP entitlement was computed for all rated officers. Previously, eligibility determination was based on the anniversary of the Officer Service Date (OSD). The FY 99 NDAA changed eligibility determination to the anniversary of the ASD.

2.5.3. OFDA Computations. To receive credit for a month of OFDA, an individual must:

2.5.3.1. Be assigned to primary or corollary duties that require flying or ground-based radar duty and perform valid flying or ground-based radar duty which are authorized OFDA credit in the current month or preceding three months.

2.5.3.1.1. After establishment of an ASD as an ABM and assigned to OFDA-creditable ground based radar duty will receive OFDA credit for those duties. ABMs must fly a minimum of six years (72 months) of aircraft-based operational flying duty accumulator (OFDA) credit by the 12th year of aviation service to be eligible for continuous ACIP beyond their 12 year gate.

2.5.3.2. Be assigned to rated/CEA in-flight or similar RP duties while assigned FSC A, B, U, X, or Z for at least 15 days within each calendar month that earned OFDA credit from the current month or previous three months. Rated officers or CEA members assigned to an active flying billet pending a PCS assignment to an inactive billet should sign out from the losing base after the 15day of the month in order to receive OFDA credit for that month. They must have also performed OFDA-creditable flying within three months of the departure month.

2.5.3.3. Have no more than 18 years of aviation service for rated officers and 20 years of aviation service for career enlisted aviators. ***Note***: If required, members may accumulate badge-creditable OFDA months toward advanced rating criteria after the 18th or 20th year of aviation service. See AFI 11-402.

2.5.3.4. Individuals initially assigned to flying duty (FSC A) or ground-based radar duty (FSC B)**,** or returning to such duty from a disqualified or inactive status, other than FSC S, receive OFDA credit from the date of assignment of an active FSC. If such individuals do not fly within three months of that date, the HARM office will retroactively change the active FSC to FSC S, effective the day following the date of initial assignment of the

active FSC. Deduct OFDA credit which began accruing with assignment of the original active FSC and terminate entitlement to OFDA credit. Assign an active FSC when flying or ground-based radar duty begins, effective two months before the date of the first flight. OFDA credit resumes from that date. ***Example:*** Captain Miller is assigned FSC A on 19 December but first flies on 17 April: On 20 March, the HARM changes the FSC A to FSC S, effective 20 December. Captain Miller accumulated three months OFDA credit for January, February, and March. (Do not credit December because Capt Miller was assigned an active FSC for less than 15 days during that month.) The FSC S action deducts the three months credited and stops further accumulation. On 17 April, change the FSC S to FSC A, effective 17 February. This retroactive change restarts OFDA credit. Do not award OFDA credit for February (less than 15 days assigned), but award credit for March and April. Credit continues to accumulate until the individual fails to perform for a period greater than three months.

2.5.3.5. When aircrew members who are actively flying prior to reaching 18 years (rated) and 20 years (CEA) of aviation service do not perform by the end of the third month following the month in which flying duties were last performed, change FSC to S effective the first day of the fourth month following the month in which flying duties were last performed and stop OFDA credit. Change the FSC to A again effective the date of the member‘s next OFDA-creditable flight. Do not award retroactive credit. ***Example:*** Lt Rochon flew on 14 May and did not fly again until 18 November: The HARM office assigns FSC S on 1 September. Credit OFDA for May, June, July, and August. The HARM office changes the FSC back to A on 18 November. There is no OFDA credit for November because the member was assigned FSC A for less than 15 days during that month. OFDA credit is not earned in September and October.

2.5.3.6. Unit commanders will notify the servicing HARM office when an ABM assigned to OFDA-creditable ground based radar duties prior to reaching 18 years of aviation service does not perform crew duties by the end of the third month following the month in which crew duties were last performed. HARM office personnel will change the member’s FSC to S effective the first day of the fourth month following the month in which crew duties were last performed and stop OFDA credit. Change the FSC to B effective the date the member resumes crew duties. Do not award retroactive credit.

2.6. OFDA Waivers. Operational flying duty requirements for officers and CEAs are established by public law. IAW AFI 36-2110, *Assignments*, it is Air Force policy that as many rated officers as possible complete at least 10 years (120 months) of operational flying by the 18th year of aviation service, however not all officers will fulfill the requirements to receive ACIP through 25 years of aviation service. For CEAs, Air Force policy is to manage CEAs to complete at least 9 years (108 months) of operational flying by the 15year of aviation service; not all CEAs will fulfill the requirements to receive CEFIP through 25 years of aviation service. The Secretary of the Air Force (SECAF) may waive OFDA requirements for rated officers and CEAs who are unable to meet their flying requirements due to reasons beyond their control. Each year, MAJCOM commanders may submit nominations for Lieutenant Colonels and below and SMSgts and below to AF/A3O-AT, for Colonels (and selectees) to AF/DPO, and for CMSgts (and selectees) to AF/DPE, for review and staffing to SECAF. To implement this program the following procedures apply:

2.6.1. Rated officers and CEAs are eligible for OFDA waiver consideration.

2.6.1.1. Rated officer candidates must have at least 72 months (6 years) of OFDA credit to apply for a waiver.

2.6.1.2. CEA candidates must accomplish at least 60 months (5 years) of operational flying during the first 10 years of aviation service, or 96 months (8 years) of operational flying duties during the first 15 years of aviation service to apply for a waiver.

2.6.1.3. Officers and CEAs who have not accumulated the minimum number of months shown above are not eligible for waiver consideration.

2.6.1.4. In addition to meeting established criteria in this section (paragraph **2.6**), an ABM must have an established ASD and be eligible to receive ACIP.

2.6.1.5. By direction of the SECAF, third gate waivers, for individuals to receive ACIP or CEFIP through 25 years of aviation service when OFDA requirements have not been met, will not be considered.

2.6.1.6. Retroactive waivers may be approved for rated officers who obtain 72 months of OFDA credit after the 12th year of aviation service. Members will be authorized continuous entitlement to ACIP from the month in which they completed 72 months credit. (Members are not qualified for continuous entitlement prior to meeting qualification requirements.) ***Example:*** Major Standish reached her 12th year of aviation service on 18 January 09 and had accumulated 60 months of OFDA credit, 36 months short of the 12 year requirement, and was assigned ASC 5A, conditional entitlement status. Effective 17 January 10 she accumulated 72 months of OFDA and applied for a waiver of her 12th year requirement on that date. SECAF approved an OFDA waiver on 15 June 10 and Major Standish's HARM office was directed to publish an AO changing Major Standish's ASC from 5A to 2A and start continuous ACIP effective 17 January 10. ***Note:*** CEAs are not eligible for retroactive waivers.

2.6.1.7. For OFDA waiver requests submitted from the MAJCOM or equivalent, and approved by SECAF prior to loss of continuous pay, members will be authorized continuous entitlement to ACIP or CEFIP from the requirement anniversary date (if otherwise qualified).

2.6.1.8. For OFDA waiver requests submitted from the MAJCOM or equivalent, and approved by SECAF after the loss of continuous pay, members will be authorized entitlement to ACIP or CEFIP from the date the member submitted the original request to the first office in the member's MAJCOM or equivalent chain of command (if otherwise qualified).

2.6.2. MAJCOM commanders may submit OFDA waiver nominations only when the member failed to achieve requirements due to reasons beyond his or her control. Examples include, but are not limited to: banked UPT graduates, extended DNIFs, rated officers assigned to deactivating/draw down flying units or Air Liaison Officer assignments who cannot be placed into another flying position prior to completion of 120 months of OFDA credit at 18 years of aviation service, rated officers assigned to non-flying duties necessary to comply with the requirements of the Goldwater-Nichols Act (joint duty schools/follow-on tours) or the Acquisition Public Law, and CEAs assigned to inactive flying billets to perform RPA sensor operator duties.

2.6.2.1. Officers and CEAs selected for highly competitive and nominative assignments merit OFDA waiver consideration, when those assignments are specifically responsible for rated officers and CEAs failing to accomplish OFDA requirements. Should such assignments jeopardize the achievement of OFDA requirements, place appropriate documentation in the member's personnel record. Documentation will include reasons why the member was assigned to a non-flying position (see paragraph **2.6.6**).

2.6.2.2. Waiver packages are considered on a case-by-case basis, to include objective and subjective assessment of the member's request. Eligibility for waiver consideration does not ensure waiver approval.

2.6.3. Rated officers receiving acquisition bonus monies may not be eligible for OFDA waivers.

2.6.4. Months lost due to time spent under flying status code K (Inactive--lack of support) do not meet OFDA waiver criteria unless the officer or CEA was assigned to a unit undergoing draw down or conversion to an aircraft in which the individual's specialty was not required, or when the unit aircraft was operationally grounded (paragraph **1.3.2**). Individuals must meet both K code and draw down, conversion, or grounding criteria to be considered for a waiver. ***EXCEPTION:*** Members in active flying/ground-based radar assignments assigned flying status code K while deployed TDY to non-flying assignments IAW **Table 2.6** are eligible for waiver consideration.

2.6.5. Individuals who voluntarily turn down a flying opportunity or elect to move to a non-flying position which would preclude the possibility of meeting OFDA requirements are not eligible for OFDA waivers (except as may be provided for in paragraph **2.6.2.1**).

2.6.5.1. When an individual declines an opportunity to fly and is selected for a non-flying assignment, document this action in the member's personnel record, as specified in paragraph **2.6.6** Reference the flying assignment that was declined.

2.6.6. AFPC, HQ USAF, or MAJCOM assignment officers, as applicable, will document situations that exist at the time of assignment which may preclude a member from meeting OFDA requirements, to establish an audit trail. (MAJCOMs will verify flying status code K criteria.) Documentation may be used to verify why OFDA waiver candidates were unable to accomplish OFDA requirements.

2.6.7. MAJCOMs are responsible to ensure each individual eligible for an OFDA waiver is considered for a waiver.

2.6.7.1. Submit OFDA waiver requests to the servicing HARM office no earlier than the year prior to loss of flight pay.

2.6.7.1.1. HARM offices will staff requests to the MAJCOM.

2.6.7.1.2. For members not assigned to an Air Force MAJCOM (i.e. members assigned to organizations such as USCENTCOM, USPACOM, or USSTRATCOM), individuals will submit packages to their servicing Air Force HARM office, which will staff packages to the MAJCOM that is in the HARM office's chain of command.

2.6.7.1.3. For members assigned to Headquarters, USAF, submit waivers through the individual's supervisory chain of command (A1, A3, A4, etc.), then to A3O-AT, DPO, or DPE.

2.6.7.2. HARM offices will review OFDA packages for accuracy, ensure all required items are included, and validate eligibility criteria IAW this instruction. For members assigned to Headquarters, USAF, members will provide required items (listed below). HAF members may contact the AF/A1 staff or AF/A3O-AT to validate eligibility for waiver consideration.

2.6.7.2.1. OFDA waiver request packages will include the member's dated request letter, Aviation Service Worksheet, justification for OFDA request, Military Personnel Data System duty history (SURF), and any other documents necessary to support justification.

2.6.7.2.2. MAJCOMs will coordinate with AFPC (N/A for ARC personnel) to ensure support for packages when waivers are based on assignment actions. For HAF members, the AF/A1 staff will accomplish AFPC coordination.

2.6.7.2.3. It is the responsibility of the member submitting the OFDA waiver request to establish adequate justification for waiver consideration.

2.6.7.3. Packages forwarded to HAF for SECAF approval must contain MAJCOM/CC (or equivalent) or HAF (2-letter or equivalent in the member's chain of command) indorsement. Forward OFDA waiver nominations for Lieutenant Colonels and below and SMSgts and below to AF/A3O-AT, for Colonels (and selectees) to HQ AF/DPO, and for CMSgts (and selectees) to AF/DPE. If submission is not warranted, MAJCOM commanders/equivalents or HAF senior officers may deny requests.

2.6.7.3.1. Prior to MAJCOM commander/HAF senior officer approval, MAJCOM/HAF POCs may send OFDA waiver packages to AF/A3O-AT, AF/DPO, or AF/DPE for an informal review; however, POCs will accomplish the initial review prior to submitting packages to HAF offices.

2.6.8. AF/A3O-AT, AF/DPO, or AF/DPE will verify that packages meet eligibility criteria. AF/A3O-AT (or AF/DPO/DPE) and AF/A1 staff representatives will review packages. If all offices concur, nominations will be forwarded through the HAF chain of command to SECAF for consideration for an OFDA waiver. Packages that do not meet eligibility criteria will be returned to the MAJCOM. Waivers will be approved only for the minimum months required.

2.6.8.1. Individuals who receive an OFDA waiver are not eligible for a second OFDA waiver. For individuals who receive waivers, the specific eligibility requirement is waived for the minimum extent necessary for that individual; members are not granted additional months of OFDA credit.

2.7. Taking Part in Flying by Rated Officers. Public law and DoD directives restrict active rated flying to officers in positions that require members to maintain flying skills.

2.7.1. Flying duties are assigned in the following precedence:

2.7.1.1. API 1 or 2 officers assigned to support the weapon system crew ratio.

2.7.1.2. Student officers assigned to a formal course of flying training.

2.7.1.3. Officers assigned to positions coded API 6 or 8.

2.7.1.4. Officers assigned to positions at MAJCOM or FOA level or below coded API 3 or 4, or non-rated (API 0). Assign such officers to rated aircrew duties on the basis of the most recent aviation service date, if:

2.7.1.4.1. The assignment provides at least 24 months of local flying availability (12 months at short tour bases).

2.7.1.4.2. The flying assignment is to an approved operational support mission specifically designated by HQ USAF.

2.7.1.5. Rated officers will not perform flying duties during periods of non-flying TDY, permissive TDY, or while on leave. ***EXCEPTION:*** ARC members on terminal leave from active duty, who are otherwise eligible to fly, may perform flight duties.

2.7.1.6. Officers (excluding the primary aircrew) accomplishing orientation flights fly in passenger status and will not perform flying duties.

2.7.2. Special Circumstances.

2.7.2.1. If special circumstances require active temporary operational flying that is not IAW paragraph **2.7.1**, MAJCOM/A3 may approve exceptions on an individual case basis (FAC 6/E waiver). See **Table 2.2**

2.7.2.2. If special circumstances require rated officers to perform temporary in-flight non-rated or non-crew (operational support) duties, HARM offices will assign FAC 8. For rated officers who were in inactive status, publish an AO assigning FAC 8, FSC J, and include in the remarks section of AO: "Rated Officer assigned to perform in-flight non-rated (or non-crew) duties." Officers performing non-rated duties will log aircrew certification code Z on the AFTO Form 781; flight time does not count towards OFDA or ACIP entitlement.

2.7.3. Do not assign active flying duties to members scheduled for an academic instruction course of 180 days or longer. The HARM office will assign FSC L to these members. (See also **Table 2.6**.)

2.7.4. Reserve officers not on extended active duty (EAD) may be assigned to inactive rated positions (API 3 or API 4).

2.7.4.1. Send requests for removing Reservists from flying to AFRC/A3TB (with copies to AF/REO and AF/A3O-AT) for approval.

2.7.4.2. Send requests for removing ANG personnel from flying to NGB/CF (with a copy to AF/A3O-AT) for approval.

2.7.5. Rated officers assigned to API 0 billets may fly on a non-interference basis when required. Incentive pay and OFDA credit are not authorized for non-interference flying. Members will not log flying time on the AFTO form 781. (See also paragraph **2.10.4**).

2.8. Flight Surgeon, Pilot-Physician, and Critical Care Air Transport Team Flying Policy.

2.8.1. To be assigned to active flying status, a flight surgeon must be medically qualified, physiologically qualified (if applicable), and maintain flight medicine credentials. To receive conditional ACIP, active flight surgeons must be assigned to an API 5 unit manpower document (UMD) position with Duty Air Force Specialty Code (DAFSC) 48XX, or 40C0C

with an additional AFSC of 48XX, be on active flying status AOs, and be qualified in the aircraft. IAW DoD FMR 7000.14-R, Volume 7a, *Military Pay Policy and Procedures - Active Duty and Reserve Pay*, flight surgeons are conditional fliers and qualify for entitlement to conditional ACIP by completing the prescribed number of operational flying hours per month.

2.8.1.1. Commanders may authorize inactive flight surgeons to fly and log time without ACIP on a noninterference basis with unit training and flying schedules. Flight surgeons not qualified in an aircraft, on inactive AOs, will log only "Other" flight time and include remarks on the reverse side of AFTO Form 781 (for example, "Inactive flight surgeon," or "Flight surgeon not qualified in aircraft"). Paragraphs **2.14.3** and **2.14.5** apply.

2.8.1.2. When a flight surgeon is assigned to an API 0 position, the HARM office will terminate active flying AOs and assign the member ASC 8J. Paragraph **2.14.7** applies.

2.8.2. A flight surgeon possessing an additional pilot or navigator rating and assigned to an API 5 flight surgeon position flies only as a flight surgeon, unless selected and approved as a pilot-physician or navigator-physician IAW AFI 11-405, *The Pilot-Physician Program*. Pilot-physicians/navigator-physicians assigned to active flying positions (API 1/2) fly as line pilots/navigators. AF/A3/5 authorizes exceptions upon request, based on justification provided by the Surgeon General (AF/SG). Flight surgeons who hold valid pilot or navigator ratings are entitled to conditional ACIP only; OFDA credit is not authorized, even when members are assigned to API 1/2 positions.

2.8.3. **Pilot-Physicians Procedures.** AFI 11-405 prescribes procedures for the US Air Force Pilot-Physician Program. Pilot-physicians remain conditional fliers for ACIP entitlement and do not earn OFDA credit. Except as noted above, active flying pilot-physicians will be assigned ASC 8A, FAC 9, and API 5, and hold DAFSC 48VX. Retain members in ASC 8 beyond 25 years of aviation service. Credit flight time logged as a pilot towards advanced pilot and flight surgeon ratings (only when member is assigned FAC 9) and ACIP entitlement.

2.8.4. **Critical Care Air Transport Teams (CCATT) Procedures.** Active and inactive flight surgeons may be tasked to assist CCATTs with patients on a mission.

2.8.4.1. Active flight surgeons assigned to API 5 positions, with ASC 8A, are authorized to log crew position "FS" and primary time on all USAF aircraft missions based on their aircraft qualification.

2.8.4.2. Inactive flight surgeons assigned to API 0 positions, in ASC 8J and tasked to perform CCATT non-crew duties, are authorized to log "FZ" crew position and primary time on these missions. Flight time may only be logged when critical care patients are onboard. When authorized, the member's HARM office will process the operational support AO. Assign FAC 8, and include AO remarks: "Rated officer tasked to perform CCATT non-crew FAC 8 duties. Crew position FZ and non-crew HDIP authorized." The member's ASC remains ASC 8J.

2.8.5. Flight surgeons, pilot-physicians, and CCATT personnel will not perform flying duties during periods of non-flying TDY, permissive TDY, or while on leave. ***EXCEPTION:*** ARC members on terminal leave from active duty, who are otherwise eligible to fly, may perform flight duties.

2.8.6. Members accomplishing orientation flights fly in passenger status and will not perform flying duties.

2.9. Taking Part in Flying by Career Enlisted Aviators.

2.9.1. Flying duties are assigned in the following precedence:

2.9.1.1. API A or B CEAs assigned to support the weapon system crew ratio, flying training instruction duty, operational test and evaluation functions, Foreign Military Sales (FMS), etc.

2.9.1.2. Students assigned to a formal course of flying training.

2.9.1.3. Career enlisted aviators assigned to positions coded API B or D.

2.9.1.4. Career enlisted aviators assigned to positions at MAJCOM or FOA level or below coded API C or E. Assign career enlisted aviators API C or E aircrew duties on the basis of the most recent aviation service and be careful not to cause the member to fall short of meeting OFDA credit.

2.9.2. Do not assign active flying duties to members who are scheduled for an academic instruction course of 180 days or more.

2.9.3. Career enlisted aviators will not perform flying duties during periods of non-flying TDY, permissive TDY, or while on leave. ***EXCEPTION:*** ARC members on terminal leave from active duty, who are otherwise eligible to fly, may perform flight duties.

2.9.4. Career enlisted aviators (excluding the primary aircrew) accomplishing orientation flights fly in passenger status and will not perform flying duties.

2.9.5. If special circumstances require active temporary flying that is not IAW paragraph **2.9.1**, MAJCOM/A3 may approve exceptions on an individual case basis (FAC E waiver).

2.9.6. CEAs assigned to API-Z billets may fly on a non-interference basis when required. Incentive pay and OFDA credit are not authorized for non-interference flying. Members will not log flying time on the AFTO Form 781. (See also paragraph **2.10.4**).

2.10. Taking Part in Flying by Non-rated Officer Aircrew Members and Non-CEA Enlisted Aircrew Members.

2.10.1. Non-rated officer and non-CEA enlisted aircrew members (FSC D) are qualified personnel assigned to designated aircrew positions. Non-rated/non-CEA aircrew members are included onboard aircraft when their presence is required for the aircraft to accomplish its primary tasked mission. This is their full-time duty. When a full-time presence is not required, operational support flying may be applicable (see paragraph **2.10.2**). Non-rated/non-CEA aircrew members will maintain flying class III physicals.

2.10.1.1. Non-CEA enlisted aircrew members require an aircrew prefix of X (Basic Aircrew), K (Instructor), or Q (Evaluator).

2.10.1.2. Non-rated officer aircrew members may be assigned to duty positions with an AFSC prefix of X (Basic Aircrew), B (Squadron Operations Officer), C (Commander), F (Flight Test), K (Instructor), or Q (Evaluator).

2.10.1.2.1. When a non-rated officer aircrew member and/or parachutist is assigned to an authorized X or J (Jump) prefixed UMD position which is also a Commander (C prefix) or a Squadron Operations Officer (B prefix) position, the C/B prefix does not remove the authorization to fly or jump. Place the following remark on the individual's AO: "Member occupies an X (or J) prefix UMD position."

2.10.1.2.2. FSC J (Inactive) or L (TDY School) identifies aircrew members not assigned to active flying positions. AOs terminate authorization to fly and entitlement to incentive pay.

2.10.2. FSC C (Operational Support) identifies non-rated/non-CEA personnel required to perform essential inflight duties that cannot be accomplished by rated officers, CEAs or non-rated aircrew members. Operational Support fliers may be required to perform flight duties on an occasional basis. However, their assigned full-time duties do not require them to be onboard the aircraft to accomplish its assigned primary mission. When the requirement to fly terminates, flight record responsibility ends. Authorized man-months are required prior to issuance of AOs. Process requests for operational support flying IAW AFI 11-402.

2.10.3. Aerospace physiologists (DAFSC 43AX), Human Performance Training Teams (DAFSC 4M0X1), and non-aircrew aerospace medicine personnel(DAFSCs 42GX and 4N0XXs) are authorized to participate in aircraft flights as observers on a noninterference basis. HARM offices will publish AOs according to this instruction and MAJCOM directives. Neither ACIP entitlement nor OFDA credit are authorized. Personnel who provide high altitude airdrop mission support qualify for Hazardous Duty Incentive Pay (HDIP). Paragraphs **2.14.3** and **2.14.5** apply. Personnel who fly in support of high altitude airdrop missions will comply with AFI 11-402.

2.10.3. **(PACAF)** Aerospace physiologists (DAFSC 43AX) and Human Performance Training Teams (DAFSC 4M0X1) will have a letter authorizing them Non-Interference Flying in PACAF signed by the WG/CC.

2.10.4. Other non-rated/non-CEA personnel who fly occasionally to perform specific tasks (e.g., administrative duties, evaluation of equipment, maintenance, passenger escort, security for classified documents, crew chiefs who perform duties on the ground at the final destination or points enroute and other duties not authorized as operational support IAW AFI 11-402) may have AOs published according to this instruction and MAJCOM directives. Individuals in these categories will fly on a non-interference basis. Neither flying incentive pay nor OFDA credit is authorized. Paragraphs **2.14.3** and **2.14.5** apply.

2.10.4.1. Members who fly on non-interference AOs will not be placed on the AFTO Form 781 (see paragraph **1.6.2.2**), except for those members specified in paragraph **3.2.1.5.2**

2.10.4.2. Non-Aircrew personnel who fly occasionally to obtain familiarity with the flying environment or directed to perform specific inflight duties on an infrequent or irregular basis (Commanders [including unit commanders], Operations Officers, and supervisory personnel) may do so under the guidelines of paragraph **1.6** Non-aircrew members assigned to flying unit commander positions may log flying time IAW paragraph **3.2.1.5.2**

2.10.4.3. **(Added-PACAF)** In PACAF, the flying category "other non-rated member" is not to be used for the convenience of transporting individuals TDY or as a substitute for the orientation flight program. Examples of members who may fly in this status in PACAF aircraft may be SERE Specialist supporting personnel recovery/CSAR activities, intelligence personnel, operations group or command chief master sergeants and first sergeant of flying unit/group who fly frequently with their units to obtain/maintain familiarity of their flying environment and of their unit members. Individuals not meeting the criteria above will not be placed on aeronautical orders.

2.10.4.4. **(Added-PACAF)** OG/CC will identify in writing the individuals to place on AOs. OG/CC will validate the requirement to fly annually and the AO will not exceed 12 months.

2.10.4.5. **(Added-PACAF)** For NAF and HQ PACAF personnel, Non-Interference Flying will be used for established categories of individuals only. These groups must submit a plan outlining their need to be on the aircraft, complete with objectives and expectations. Submit your proposed plan to HQ PACAF/A3T, 25 E. ST SUITE G320, JBPH-H, HI 96853-5426 for approval, prior to requesting non-interference AOs.

2.10.5. Aircrew members not formally entered into Initial Qualification Training will fly under orientation flight guidelines for familiarization flights IAW paragraph **1.9.4.7.1.2**

2.10.6. Members will not perform flying duties during periods of non-flying TDY, permissive TDY, or while on leave. ***EXCEPTION:*** ARC members on terminal leave from active duty, who are otherwise eligible to fly, may perform flight duties.

2.10.7. Members participating in orientation flights fly in passenger status and will not perform flying duties.

2.10.8. **(Added-PACAF)** The HARM is required to submit a letter/E-mail to PACAF/SG, with an info copy to PACAF/A3TC, each time an active flight surgeon exceeds the 60-day flight currency. Flight Surgeons exceeding their 60-day flight currency will be required to re-accomplish the flight surgeon qualification examination. Failure to accomplish the flight surgeon qualification examination will result in a go-no-go violation, and refusal to be allowed to fly. HARM/SARM offices will develop local procedures to track this requirement**.**

2.10.8.1. **(Added-PACAF)** For Flight Surgeons remaining non-current for more than 30 days, the HARM will submit a follow-up notification, at the end of each month, to the original addressees as well as the individual's unit commander, OG/CC (or equivalent) and MDG/CC.

Section 2B—Supervisory Operational Flying Positions

2.11. Supervisory Position Criteria. To conserve available resources, clearly identify rated officers and CEA supervisory positions (API 6, 8, B, or D) that require the incumbent to actively fly.

2.12. Supervisory Flying.

2.12.1. Rated officer and CEA supervisory flying is necessary to ensure that appropriate rated staff officers maintain a current and comprehensive background in the overall flying operations of the organization.

2.12.2. Perform supervisory flying to the maximum extent possible in primary mission aircraft inventory (PMAI) associated with the position.

2.12.3. Commanders (including unit commanders) authorized to designate rated and CEA supervisory positions must minimize the impact of such flying and designate API 6, 8, B, or D positions only when active flying is essential for mission accomplishment. Designating authorities are:

2.12.3.1. **General Officer.** The Chief of Staff designates general officer operational flying positions. Requests for a change of general officer flying status will be submitted to AF/A3/5. AF/A3/5 will coordinate changes with AF/DPG. All requests for general officer operational flying training must be coordinated with AF/DPG. See **Table 2.8** for general officer flying authorizations. See paragraph **2.14.1** and **Table 2.9** for additional guidance on general officer indoctrination fliers.

2.12.3.2. **Colonel.** MAJCOMs designate colonel active flying positions (API 6/8) by forwarding AF Form 480, *Aircrew AFSC/Active Flying Justification*, to AF/DPO for review and approval (see AFI 38-201, *Determining Manpower Requirements*). Colonel flying positions will be limited to individuals who directly supervise aircraft flying operations, flight safety, standardization/evaluation programs, and operational readiness inspection programs. Should positions not warrant full time flying, there may be justification for the individual to participate in the indoctrination flying program.

2.12.3.3. **Lieutenant Colonel and Below.** MAJCOMs designate Lt Colonel-and-below rated officer and CEA positions that require active flying IAW AFI 38-201. If the position requires an AF Form 480, provide justification for flying on the form. Normally, API 8/D positions (NAF/FOA/DRU/MAJCOM) are authorized only in safety, inspector general, and standardization/evaluation functional areas in which flying is a requirement associated with the position. On occasion, justification may exist for an aircrew member to fly while in inactive status; see paragraph **2.14.**

Table 2.8. General Officer Flying Positions

The following general officer positions are authorized operational or indoctrination flying positions (as shown) when filled by USAF general officers. Individuals flying operationally must accomplish Form 8 qualification to include instrument qualification and must maintain a minimum of BAQ status.		
Organization	**Position**	**Authorization**
Joint Chiefs of Staff	Chairman	Indoctrination Flying
	Vice Chairman	
Combatant Commands	Commander	As determined by the Commander (Note 1)
	Deputy Commander	Indoctrination Flying
	AFCENT/CC	
	Special Operations Component Commanders assigned to Combatant Commands	
HQ USAF	Chief of Staff	Note 2 Applies
	Vice Chief of Staff	Indoctrination Flying
	Assistant Vice Chief of Staff	
	AF/A1 AF/A2 AF/A3/5 AF/A3O AF/A4/7 AF/A8 AF/SE SAF/AQ SAF/IG	
	AF/SG (When position is filled by a pilot-physician)	Indoctrination Flying
AFDW	Commander	Indoctrination Flying
ACC, AETC, AFGSC, AFMC, AFRC, AFSOC, AFSPC, AMC, PACAF, USAFE	Commander	Operational Flying (Note 3)
NGB	Chief*	Operational Flying

NGB	Deputy Director*	(Indoctrination Flying)
*NGB/CF or the Deputy NGB/CF may fly operationally (single operational flying authorization)		
ACC, AETC, AFGSC, AFMC, AFRC, AFSPC, AMC, PACAF, USAFE	Vice Commander	Indoctrination Flying (Note 3)
AFSOC	Vice Commander	Operational Flying (Note 3)
ACC, AETC, AFGSC, AFMC, AFRC, AFSPC, AMC, PACAF, USAFE	Operations Director (A3)	Operational Flying (Note 3)
AMC	Deputy Operations Director (DA3)	Operational Flying (Note 3)
ACC, AFGSC, AFRC, AFSOC, AMC, ANG, PACAF, USAFE	Numbered Air Force Commander	Operational Flying (Note 3)
AETC	Commander, 19 AF	Operational Flying (Note 3)
ACC, AFGSC, AFRC, AFSOC, AMC, PACAF, USAFE	Numbered Air Force Vice Commander	Indoctrination Flying (Note 3)
ACC, AETC, AFGSC, AFRC, AFSOC, AMC, ANG, PACAF, USAFE	Wing Commander (Note 4)	Operational Flying
ACC	Commander, AFWC	Operational Flying (Note 3)
	DCFACC	
AETC	Commander, AU (AU/CV when AU/CC does not fly)	Operational Flying (Note 3)
AFMC	Commander, AAC Commander, AFFTC	Operational Flying (Note 3)
AFOTEC	Commander	Operational Flying
AMC	Commander, AMWC Commander, EMTF	Operational Flying (Note 3)
	PAG/CC (Note 3 N/A)	
USAFA	Commander	Operational Flying
	Commandant of Cadets	
USAFE	3 AF/CVA	Operational Flying (Note 3)
NATO	E-3A Comp/CC	Operational Flying

NOTES:

1. Combatant Commanders may determine their flying status, based on requirements. Notify AF/A3/5 of status, with info copy to AF/A3O-AT and AF/DPG.

2. The Chief of Staff will determine the status of the AF/CC position.

3. MAJCOMs may determine the flying status of general officers assigned within their command, utilizing the available AF/CC-approved operational positions within the command. This option applies to all approved operational flying positions above wing commander. Current approved positions are shown in **Table 2.8** with most recent HAF authorized status (***Note:*** May not reflect actual status if a MAJCOM change has been made). If a change is made, notify AF/A3/5 with an info copy to AF/A3O-AT and AF/DPG.

4. Wing Commander applies to commanders of flying wings (and includes expeditionary flying wings). Air base and support wing commanders are specifically excluded.

5. Current list of approved general officer operational flying positions is maintained on file in AF/A3O-AT. AF/A3O-AT maintains records of approval for all general officer operational flying positions.

6. Individuals in authorized O-6 operational flying positions who have been selected for promotion to the grade of Brigadier General may continue to fly operationally while assigned to the O-6 flying position.

2.13. Supervisory Position Limitations. MAJCOMs will establish procedures to review API 6, 8, B, and D supervisory flying positions when incumbents are assigned FSC K (lack of support) and when adequate support will not be available within six months. Where practical, convert such positions to API 3, 4, C or E.

2.13.1. **(Added-PACAF)** Rated supervisors. Defined as commanders (including unit commanders)/key supervisors (OG/CD, unit DO) (API 6 and 8) are authorized to perform aircrew duties in any aircraft under their control for the purpose of supervising or observing flying training programs. Additionally, OG Superintendents who are on aeronautical orders, are current and qualified in an aircraft and assigned to a base with CEA/multi crew aircraft may fly under this paragraph. AFI 11-401, paragraph 3.7.1., also applies.

2.13.1.1. **(Added-PACAF)** With the exception of COMPACAF, rated supervisors unqualified in fighter aircraft will not fly in the front seat of the aircraft.

2.13.1.2. **(Added-PACAF)** Mobility and rotary-wing aircraft: Rated supervisors unqualified in the aircraft are authorized to fly a primary crew position but must meet the following criteria:

2.13.1.2.1. **(Added-PACAF)** Fly with an IP, and a complete crew complement.

2.13.1.2.2. **(Added-PACAF)** Attend a senior officer orientation course. If one doesn’t exist receive in-unit aircraft familiarization training, and complete all required Aircrew Flight Equipment training for that aircraft.

2.13.1.2.3. **(Added-PACAF)** OG Superintendents will not fly in a primary crew position on any aircraft they are not qualified in.

2.13.2. **(Added-PACAF)** Submit all Authorization Change Requests (ACRs) for API 3, 4, 6 and 8 positions to Manpower and Organization Division (HQ PACAF/A1M), 25 E. ST SUITE F-214, JBPH-H, HI 96853, and coordinate through HQ PACAF/A3T and appropriate NAF for review. An AF Form 480 must accompany these ACRs and fully justifying rated expertise in supervisory positions. Base active (API 6/8) or inactive (API 3/4) flying status solely on job requirements, not on individual needs or aircraft support capability.

2.14. Indoctrination Flying. Rated officers and CEAs in inactive status who are required to perform operational flying on a temporary basis to complete a specific official task (for example, to evaluate an operational flying procedure, review flying training effectiveness, take part in a flying exercise or test program, or become familiar with a specific operational weapon system and procedure) may be authorized indoctrination flying status. The following policy applies:

2.14.1. MAJCOMs (or MAJCOM equivalents) select and authorize rated staff and CEA positions for indoctrination flying. Indoctrination flying allows inflight observations of mission equipment or procedures that will benefit the organization. Incumbents must request to fly. Take a conservative approach in designating these positions. MAJCOMs (or MAJCOM equivalents) will establish procedures for approval of indoctrination flying in accordance with **Table 2.9** MAJCOMs will identify the incumbent by assigning FSC T. MAJCOMs may not increase the number of general officer indoctrination fliers without AF/CC approval.

2.14.2. MAJCOM commanders must approve the use of command aircraft resources to support indoctrination flying for personnel outside their commands. Authorization may be delegated, but not lower than MAJCOM level.

2.14.3. MAJCOMs must ensure individuals complete, before flight, adequate training on emergency procedures, life support equipment, and aircraft systems. Individuals must be physically and, where required, physiologically qualified.

2.14.3. **(PACAF)** 1 (Added) Prior to flight, all indoctrination fliers will complete orientation flight Aircrew Flight Equipment training according to AFI 11-301, Vol 1., PACAF Sup 1, *Aircrew Flight Equipment Program*, and cockpit familiarization training. Indoctrination flyers will occupy the jump seat, additional crew member seats or the rear cock pit position. PACAF/A3/5 is the approval authority to allow indoctrination flyers to fly in a pilot position. Approved flyers must accomplish a Bold Face/Critical Action Procedures (CAP) test (if applicable) and situational emergency procedures training (SEPT) with an instructor pilot as established in the applicable training directives. A cockpit procedural trainer or in-cockpit review session may be substituted for the simulator. This training is valid for 30 days.

2.14.4. Indoctrination flights in inactive status do not entitle the member to OFDA credit or incentive pay and do not allow authority to change ASCs except to assign FSC T. MAJCOMs will ensure indoctrination flying does not impact unit training, and will not increase command flying hour allocations.

2.14.4.1. **(Added-PACAF)** In PACAF, due to limited crewmember training opportunities and flying hours, it is essential for commanders to personally review each request to ensure it is in the best interest of the command. Forward requests for indoctrination flying, with supporting rationale, through appropriate channels. See

attachment 10. PACAF units submit request to HQ PACAF/A3T, 25 E. ST SUITE G-317, JBPH-H, HI 96853-5426, through the NAF/A3. PACOM units submit requests to HQ PACAF/A3/5, through HQ USPACOM/J3. Incumbents of indoctrination flying positions not within PACAF or those above NAF level request indoctrination support through the appropriate NAF/A3. Individuals at NAF level may fly in other than NAF assigned aircraft with the concurrence of the NAF commander concerned. Individuals at wing level will fly in wing assigned aircraft only (HQ PACAF/A3T may approve exceptions on a case-by-case basis). Requests will be forwarded through channels to arrive at HQ PACAF/A3T, 25 E. ST SUITE G-317, JBPH-H, HI 96853-5426, at least 30 days prior to first flight. The HARM will not assign FSC "T" to an inactive flyer without written approval from PACAF/A3/5.

2.14.5. Obtaining or maintaining aircraft qualification while in inactive status is not authorized. Individuals flying in inactive status may not act as pilot in command and flights in single-place aircraft are specifically prohibited. Document indoctrination flights on the AFTO Form 781, *ARMS Aircrew/Mission Flight Data Document* using Other flight time, IAW paragraph **3.3.5**

2.14.5.1. IAW paragraph **1.12.4.3**, general officer pilots in authorized indoctrination flying positions may occupy a pilot's seat with passengers or MEP on board during non-critical phases of flight. During such times a current and qualified instructor pilot will occupy the other pilot's seat. See AFI 11-202, Volume 3, for definition of critical phases of flight.

2.14.6. MAJCOMs may authorize indoctrination flying for individuals assigned to active operational flying positions. Do not change FSC.

2.14.7. Indoctrination flying is not authorized for individuals assigned to API 0 or Z coded positions. ***EXCEPTION:*** MAJCOMs may authorize indoctrination flying for CEAs assigned to 9G100 positions, and for individuals tasked to perform indoctrination flying duties while deployed.

Table 2.9. Indoctrination Flying Approval Authority.

Approval Authority	for positions in:
HQ USAF/A3/5	Air Staff, OJCS, OSD, DoD Agencies, Joint Commands, Non-Air Force General or Flag Officers, and FOAs (AFRC members see note below)
MAJCOM	MAJCOM
ACC	CENTCOM, JFCOM, and SOUTHCOM
AFSPC	SPACECOM
AMC	TRANSCOM
PACAF	PACOM
USAFE	NATO and EUCOM
NOTES: 1. AF/CC must approve increases for additional general officer indoctrination flying positions. Submit requests to AF/A3/5 with an info copy to AF/A3O-AT. 2. For AFRC members, staff packages through AFRC/A3 for coordination prior to submission to AF/A3/5.	

2.14.8. **(Added-PACAF)** Incumbents of the following positions, if rated officers, are authorized indoctrination flying: HQ PACAF/IG/IGI/IGO, HQ PACAF/A1, HQ PACAF/SE/SEF, 497CTS/DO, 8 OSS/EWO, 18 OSS/EWO, 35 OSS/EWO and 51 OSS/EWO. Incumbents will be identified with flying status code (FSC) "T".

2.14.9. **(Added-PACAF)** General officers who perform rated and Airborne Emergency Action Officer (AEAO) duties on a flight will use the two flight authorizations duty codes reflecting the flight time performed in each position (rated/non-crew). For rated duties, log flight authorization duty character code IAW AFI 11-401, Table A2.3. that indicates the general's flying status. For AEAO duties log the flight authorization duty "FZ".

2.15. Operational Support Aircraft (OSA) and Aircrew Management.

2.15.1. The operational support aircraft and aircrew manager will provide all personnel assigned or attached for flying the opportunity to complete annual flying requirements. Attached personnel must be responsive to scheduling requirements. In line with aircrew requirements, attached personnel will perform assigned missions.

2.15.2. If TDY is authorized solely to perform aircrew duties, budgeting and funding for TDY travel of aircrew members assigned or attached for flying is the responsibility of the unit to which the aircrew member is assigned.

2.15.3. Security Assistance and Defense Attaché aircraft and aircrews.

2.15.3.1. Support aircraft for Security Assistance are assigned to HQ AFMC and placed on loan to the Defense Security Assistance Agency (DSAA).

2.15.3.2. Support aircraft for Defense Attachés are assigned to HQ AFMC and placed on loan to the Defense Intelligence Agency (DIA).

2.15.3.3. Using organizations must comply with the theater air component command/lead command rules and instructions that pertain to aircraft operations. Crew qualification, currency, training, and evaluations are the responsibility of the theater air component/lead command commander, as applicable, and will be conducted according to HQ USAF guidance and theater requirements. Operational control (as it pertains to the missions and purposes for which the aircraft are operated) and scheduling of aircraft remains within the using organization.

Section 2C—Support of Personnel Assigned to Locations or Organizations Lacking Flying Facilities or Aircraft

2.16. Attachment for Flying/Parachuting.

2.16.1. Aircrew/parachutist members assigned by PCS/PCA orders to active flying/parachutist positions in US Air Force units and organizations without flying facilities or aircraft may be attached for flying/parachuting to units with appropriate resources. Intra-wing attachments may be approved by the OG/CC. Individuals must request (in writing) attachment for flying/jumping through their chain of command to their MAJCOM or equivalent. (***EXCEPTION:*** Request for attachment for flying/parachuting is not required if flying/parachuting support and a primary unit/aircraft is addressed in a host-tenant agreement. Members will provide required information to the servicing HARM office.) Approval authority may be delegated as directed by MAJCOMs.

2.16.1. **(PACAF)** All aircrew/parachutist in PACAF assigned to an active flying/parachutist position without flying facilities or aircraft will be attached to a flying/jumping unit that will track their flying/jump requirements. HQ PACAF/A3/5 has delegated final approval authority for all attachments for flying/jumping within PACAF to PACAF/A3T and it is the A3T's responsibility to equitably distribute all attached flyers/jumpers throughout the command. Attachment for flying/jumping requests must be accomplished in writing by the individual requesting attachment IAW Attachment 7 of this supplement. It is the responsibility of the requesting individual to pre-coordinate with the prospective unit of attachment. Submit formal requests through the individual's commander, to the requested unit training office, for endorsement by the requested unit commander. Obtain the concurrence of the OG prior to submission to HQ PACAF. Requests can be submitted electronically to expedite the approval process. Scan and attach the following documents (current Aeronautical Order (AO), AF Form 1042, *Medical Recommendations for Flying or Special Operational Duty*, UMPR, Individual Data Summary and Individual Training Summary). Forward requested unit recommendations for approval, or rational for disapproval, to HQ PACAF/A3T. No flights/jumps will take place until the request has been approved. HQ PACAF/A3T will send an information copy of the approved request to the individual, the attached unit, and the assigned HARM who will maintain the approved request in the member's FRF throughout the individual's tenure of attachment. Flight record folders for O-5s and below will be maintained at the servicing HARM for the attached unit. Flight record folders for O-6 and above will be maintained at the HARM at their actual duty

location. The HARM who owns the FRF will notify HQ PACAF/A3T and the unit of attachment when the individual is no longer attached for flying/jumping.

2.16.1.1. Request for attachment must include: Individual's name, rank, Social Security Number (SSN), aviation service date (ASD), aviation service code (ASC), aeronautical rating (or badge), expected duration of attachment, date of separation (DOS)/expiration of term of service (ETS), assigned duty position title/position number/API code, aircraft last qualified in, date last flown, current AO, current AF Form 1042, and requested unit of attachment and point of contact. (Parachutists need only provide information applicable to parachuting.) Individuals should coordinate flying/parachute qualification, currency and attachment with requested units prior to submitting formal request.

2.16.1.1. **(PACAF)** Cross-command attachments must be coordinated by the requesting member's MAJCOM prior to arriving at HQ PACAF/A3TC. Additionally, PACAF/A3T must coordinate on PACAF flyers seeking attachment to another MAJCOM's flying unit prior to the request being sent to that MAJCOM. PACAF/A3T is the final approval authority for flyers and jumpers from other MAJCOM's attaching to a PACAF unit. ***EXCEPTION:*** Flight surgeons of other commands, in valid API 5 positions, may be attached to PACAF units without memorandums of attachment provided such support is addressed in a memorandum of agreement between the flight surgeon's base/command and the PACAF unit owning the aircraft. All such memorandums of attachment will be forwarded to HQ PACAF/A3TC and kept on file. Memorandums of attachment are re-accomplished every 36 months or upon reassignment (PCS/PCA) (this includes when the unit of attachment deactivates), whichever is earliest.

2.16.1.2. MAJCOMs will develop procedures for attachments within the MAJCOM. For attachments outside an individual's MAJCOM, submit the request to both MAJCOMs (or equivalent) for coordination. For attachments outside the USAF, submit the request to the gaining unit's MAJCOM equivalent approval authority and the individual's parent MAJCOM (or equivalent) approval authority for coordination.

2.16.2. Attachment units will provide resources necessary for the member to complete and maintain minimum training requirements established in applicable aircrew/parachutist training publications, including TDY cost to formal training courses. The unit to which the member is assigned is responsible for cost of the member's TDY travel to the attached unit to accomplish normal training requirements. The attached unit will maintain the FEF.

2.16.3. **(Added-PACAF)** API 5/6/B individuals assigned to units falling within or under the same OG (i.e., the OSS), do not require formal attachment for flying when flying with other units within the group.

2.16.4. **(Added-PACAF)** Units of attachment, or other units having a legitimate need to access another location's ARMS database, may do so by contacting that HARM Chief of assignment and requesting access. User access will be limited to the minimum level required to affect the inquiry/update of the required records.

Section 2D—Flying with Air Reserve Component Units

2.17. Total Force Absorption Program (TFAP) In addition to the guidance provided in this section, aircrew personnel must comply with Total Force Absorption Program (TFAP) guidance contained in AFI 11-412.

2.18. Flying With AFRC Units.

2.18.1. Members of the MAJCOM with oversight responsibility are authorized to fly in AFRC aircraft when participating in operational readiness inspections (ORIs), aircrew standardization and evaluation visits (ASEVs) and higher headquarters evaluation teams on scheduled unit visits. Flying is restricted to missions that support unit training objectives, contingencies or operational missions, to include those that augment or assist in unit conversion.

2.18.2. **Inter-Fly.** AFRC operations group commanders are authorized to approve flights with AFRC units for aircrew members not assigned or attached to an AFRC unit and are the final authority for determining when an active duty/Air National Guard member may fly unit aircraft. Such aircrew members must provide operations group commanders with a source for validating aircrew qualifications, training and currencies prior to flying. AFRC OG/CCs will forward information copies of interfly agreements to the respective NAF/A3. ***EXCEPTION:*** Those units with an existing written agreement, e.g. TFI/associate units, will follow guidance within the agreement.

2.18.2.1. Interfly agreements may involve the exchange and/or substitution of aircrew members and/or aircraft between different MAJCOM units to accomplish flying in support of contingencies, exercises or designated missions according to the appropriate OPLAN/CONOPS.

2.18.2.2. During situations where interfly may be an option, aircraft ownership does not change. Aircraft hours executed will be credited to the command and unit of assignment of the aircraft regardless of the crews MAJCOM affiliation. Ensure use of correct mission symbol.

2.18.2.3. As a minimum, interfly crewmembers will be qualified/certified in the MDS and model as well as system/configuration required to fly the aircraft and/or mission.

2.19. Flying With ANG Units.

2.19.1. The ANG Wing Commander must concur on all active duty flying with ANG units. Flying is restricted to Air Force advisors and aircrews who support unit training objectives, contingencies, or operational missions to include aircrew that inspect, standardize, augment, or assist in unit conversion. (Individuals will not be listed on the ANG web page since they are not formally attached to an ANG unit for the purpose of obtaining continuation training.) With the deployed commander's concurrence, active duty aircrew attached to Air Warrior, Combat Archer and Combat Hammer are authorized to fly with ANG units.

2.19.2. Active duty flying with ANG units for the sole purpose of continuation training (CT) is prohibited without approval from the ANG Director of Operations (NGB/A3). (Future Total Force [FTF] wings will coordinate active duty CT flying IAW the MAJCOM CONOPS). Forward all requests for active duty CT flying support to NGB/A3 with appropriate ANG Wing Commander and MAJCOM/A3 concurrence. Requests must include:

name, rank, office symbol (e.g., 9 AF/DOV), primary aircraft MDS (e.g., F-16C, C-130E), aircrew position (e.g., IP, IN), and reason for requested CT support. A complete list of AD aircrew approved to fly CT sorties with the ANG is available on the NGB/A3O Portal.

2.19.3. Active duty aircrew members authorized to fly ANG aircraft in accordance with paragraphs **2.18.2** and **2.19.2** may coordinate sortie support directly with the unit. Members must provide the supporting unit operations group commander with a source for verifying currencies, egress training, flight qualification, etc., before flying. The supporting unit operations group commander is the final authority for determining when active duty aircrew may fly unit aircraft.

2.19.4. Conduct flying in accordance with applicable US Air Force, lead MAJCOM, and ANG instructions.

2.20. Coordination Authorization. Direct communication with MAJCOMs, AFRC, and ANG concerning attachment of rated personnel is authorized.

2.21. TFI and Associate Units.

2.21.1. For TFI units, there are two separate and distinctly funded flying hour programs. The unit to which the aircraft are assigned has responsibility for oversight and management of both programs.

2.21.2. TFI and Associate units are to use their respective command's mission symbols regardless of crew status (Active/ANG/Reserve).

2.22. (Added-PACAF) The SARM: is ultimately responsible to ensure the unit's ARMS database is accurate at all times. Aircrew upgrade data will not be entered in ARMs without a certified source document (AF Form 4324).

2.22.1. **(Added-PACAF)** The SARM will ensure go-no-go procedures are performed before each flight to include all grounding items, flight currencies, and current aeronautical orders.

2.22.2. **(Added-PACAF)** Following each flight, the SARM will establish procedures to monitor and audit the accuracy and legibility of all training documentation before processing. Use this mission review process to ensure the accuracy of the ARMS database. Further verify and audit all documentation used to record training accomplishments against the AFTO Form 781.

Chapter 3

FLIGHT DOCUMENTATION

Section 3A—Logging of Flight Activity

3.1. Enter and credit flight time. Enter and credit flight time on an individual's flight record when flown in an aircraft, simulator or controlling an RPA according to this instruction and properly logged on AFTO Form 781 or AF Form 3250. The pilot designated, as "in command" of the aircraft is responsible for making sure the appropriate form is dated and properly completed, to include specific remarks as required.

3.1.1. **(Added-PACAF)** While attending a formal school over 30 days where flying is authorized, individuals will document all flying hours and continuation training on the appropriate extract documents (AF Form 3520, *ARMS Aircrew/Mission Flight Data Extract*, TAR/MAR). Within 3 duty days after returning to their duty station, individuals will provide this documentation to their unit flight manager who will in-turn update the ARMS database. **Note**: Aircrew who fly operational mission's off-station will make an exact photo-copy of the original AFTO Form 781, certify as a true extract, and turn in the copy to their HARM or SARM office for updating in ARMS.

3.1.2. **(Added-PACAF)** Do not release FRFs to any other individual without the approval of the Host Aviation Resource Management Chief. All records authorized to be signed in/out will have such action documented and tracked on an AF Form 614, *Charge-Out Record*. The individual signing for the record is responsible for returning it in the same condition as received. Do not release the FRF to individuals in suspended (ASC 04) aviation service status or individuals otherwise known to be under investigation.

3.2. Crediting Flight Time. Credit flying time as follows:

3.2.1. To credit flight activity, personnel must:

3.2.1.1. Be physically qualified. The member cannot be in DNIF status and must be medically cleared for flying duty, documented on an AF Form 1042.

3.2.1.2. Be physiologically qualified (if applicable for the aircraft).

3.2.1.3. Be on AOs to take part in frequent and regular flights as aircrew, to obtain aircrew qualification, or as operational support members (IAW AFI 11-402).

3.2.1.4. Be under an approved aircrew qualification code (based on AF Form 8/8a qualification) and aircrew position identifier (**Table A2.3**) designated on the flight authorization for the aircraft. (***EXCEPTION:*** aircrew members authorized to perform inflight duties in non-USAF aircraft, IAW paragraph **1.11**, will comply with guidance applicable to the authority controlling the aircraft in regards to flight authorization requirements.)

3.2.1.5. Be part of the crew complement (AFI 65-503) authorized to perform aircrew duties in the aircraft in order to obtain and maintain aircrew qualification, or be required for the mission.

3.2.1.5.1. Individuals required for the mission who are not part of the crew complement may log flying time only when specifically authorized to perform duties required for the mission (e.g. AEs, CROs, PJs, combat camera, etc), or when specifically authorized to perform mission-related observation or evaluation duties. Members will comply with all other applicable requirements to include medical clearance and physiological training (if applicable).

3.2.1.5.1. **(PACAF)** Individuals required for a mission to perform mission-related observation duties or evaluation duties but are not part of the crew complement must be approved by the squadron commander of the flying unit prior to flight. Document approval on a mission requirements letter (Atch 11) and provide to HARM to be filed permanently in the FRF.

3.2.1.5.1.1. Commanders will include an explanatory note in the remarks section of the FA for crewmembers that exceed the crew complement but are required for the mission.

3.2.1.5.2. Non-aircrew members assigned to flying unit commander positions may log flying time in assigned aircraft. Individuals will fly on a non-interference basis (reference paragraph **2.10.4**), will use crew position "OX" (Colonel and above) or "XX" (Lt Col and below) IAW **Table A2.3**, and will log other time on the AFTO Form 781 for entry into ARMS.

3.2.1.5.3. Non-aircrew members assigned to RPA sensor operator positions will log flying time in assigned RPA aircraft. Individuals will fly on a non-interference basis, will use aircrew position (Second Character) "X" IAW **Table A2.3**, and will log AFTO Form 781 flying time category commensurate with qualification and duties performed for entry into ARMS.

3.2.2. Flights in any other capacity are orientation flights IAW paragraph **1.9.4.7.1** and logging flight time on an AFTO Form 781 is not authorized. Commanders will ensure crewmembers and parachutists do not credit flights/jumps while on leave, permissive TDY, or nonflying/nonjumping TDY/Temporary Additional Duty (TAD), regardless of duration, or while flying on an aircraft during point-to-point travel (not authorized or required to perform aircrew duties). Aircrew members will not log flying time when the purpose for flying is to make a proficiency-sustaining jump or perform jumpmaster duties. ***EXCEPTION:*** Pararescue personnel in X-coded billets may log flying time if aircrew duties are performed during the flying portion of the mission. Document duties performed in the remarks section of the AFTO Form 781.

3.2.2.1. **(Added-PACAF)** Locally developed training accomplishment documents will be submitted to PACAF/A3TC for approval prior to utilization. Additionally, a waiver is required if the unit plans on going to paperless TARS by utilizing PEX or other types of systems to track continuation training.

3.2.3. For each individual, the total flight time logged will not exceed the total AFTO Form 781 flight time of the aircraft.

3.2.3.1. **Remotely Piloted Aircraft (RPA) Time.** RPA crews may be authorized to simultaneously control more than one aircraft during flight operations. The total time logged by each individual will reflect the total time spent controlling aircraft inflight and

is not dependent upon the number of aircraft actually controlled. Flight time logged will not exceed the time the individual was performing inflight aircraft control duties. Flight time may be credited for Group 4 and Group 5 aircraft, as defined in Joint Publication (JP) 3-30, *Command and Control for Joint Air Operations.*

3.3. Definition of Flight Time Categories. The references in this paragraph to aircraft also apply to synthetic training devices categorized as operational flying trainers or weapon system trainers. Log flight time only on the AFTO Form 781 and AF Form 3520, *ARMS Aircrew/Mission Flight Data Extract*, and use only the approved Flight Authorization Duty Codes listed in **Attachment 2**, **Table A2.3**

3.3.1. **Primary Flight Time.** Time logged by a member occupying a designated duty station identified in AFI 65-503, and actively performing the duty associated with their aircrew specialty. Only qualified aircrew members and aircrew members obtaining qualification in the aircraft will log primary time when performing in-flight duties. Non-rated/non-CEA aircrew members and operational support personnel who do not have an established crew duty station will log primary time only when actually performing required in-flight duty. For example: operating equipment or caring for medical evacuation patients.

3.3.1.1. ***EXCEPTIONS:***

3.3.1.1.1. Pilot commanders and key supervisors who fly IAW the provisions of paragraph **3.6.1** will log primary time only when actually controlling the aircraft.

3.3.1.1.2. Pilots who maintain qualification in single-place aircraft when completing instrument training or the instrument flight check in similar dual-place aircraft.

3.3.1.1.3. Graduates of a military test pilot school (Air Force Test Pilot School, Navy Test Pilot School, etc.) are considered qualified and may log primary flight time using FP, FN, or FW as the flight authorization duty code while actively flying qualitative or approved short-term aircraft tests or evaluations. This does not authorize Test Pilot School graduates to perform duties on other missions requiring qualified aircrew members at the controls of the aircraft (e.g. functional check flights).

3.3.1.1.4. Pararescue/Combat Rescue Officer aircrew members assigned to authorized flying billets, on active flying AOs and qualified in the MDS, who are required in addition to the normal aircrew complement to perform in-flight duties for mass rescued aircrew member/personnel missions may log primary flight time when performing patient support duties on mass personnel recovery missions. Primary time is authorized only during the time required in-flight duties are performed. During periods when the PJ is not performing in-flight duties associated with the rescued members, or if the PJ is non-current for that MDS, “Other” flight time will be logged. Annotate specific inflight duties that require additional crewmembers (in additional to basic crew complement) on the mission in the remarks section of the AFTO Form 781.

3.3.1.1.5. Operational support medical personnel may log primary time when tasked to perform primary medical support duties on real world Combat Search and Rescue (CSAR), Casualty Evacuation (CASEVAC) or Medical Evacuation (MEDEVAC) missions. If tasked to fly on non-US Air Force missions, ensure requests are

coordinated though the member's MAJCOM IAW paragraph **1.11.1** of this instruction.

3.3.1.1.6. Aeromedical Evacuation Crewmembers (AECM) on Aeromedical Readiness Missions (ARM) are authorized to conduct simultaneous (tandem) training on the same aircraft utilizing no more than two basic AE crews to meet flight currency requirements. AECMs in primary crew positions will log primary time when performing in-flight duties. ***Example:*** Two basic AE crews conducting separate in-flight training using separate in-flight kits, medical equipment, and mission documentation. A lead crew will be identified to the flight crew prior to take off for CRM purposes.

3.3.1.2. For pilots, primary time is time actively controlling the aircraft, excluding hands-on-time flown while instructing and evaluating (log such time under instructor or evaluator). It is not predicated on which set of controls is being used (multi-place aircraft), or on the duty position indicated on the flight authorization. Pilots receiving instruction while controlling the aircraft will log primary time.

3.3.1.3. Astronauts performing duties in the space shuttle may log primary time in their rated specialty in accordance with the preceding paragraphs. Astronauts performing space station duties may log primary time for the duration of space station activity. For space station duty, use Aircrew Position Identifier (Second Character) "A" from **Attachment 2**, **Table A2.3**

3.3.1.4. For other aircrew specialties, log primary flight time only when performing duties at a duty position established for that specialty. Where more than one station is established for the same specialty, one member at each such station may log primary time while actually performing the duties associated with that station (for example, multiple Air Surveillance Operator positions on a single aircraft). (MAJCOMs will specify which AFI 65-503-authorized crew duty station(s) flight test engineers may occupy during test functions. During periods when the flight test engineer is not actively performing his or her evaluation/test duties, Other time will be logged.) Except under conditions in this paragraph, the total primary time for any specific aircrew specialty will not exceed the total flight time. ***Note***: Due to the broad nature of flight surgeon duties, each position which another aircrew member occupies (as defined in AFPD 11-4, e.g., pilot, navigator, ABM, observer, CEA personnel), may be considered as a flight surgeon station/position (i.e., a KC-135 with a pilot, copilot, and boom operator would be authorized three flight surgeon stations). If there are more flight surgeons onboard than aircrew stations, the total primary time must be split between those flight surgeons onboard by logging primary and other time. When the number of flight surgeons on board is less or equal to the number of occupied aircrew stations, all flight surgeons are authorized to log primary time for the entire mission.

3.3.1.5. Nonrated aircrew members on active flying AOs, qualified in specific aircraft, but tasked to perform in-flight aircrew duties for a time-sensitive mission in an aircraft in which they are not current and/or not qualified, will log aircrew certification code (first character of crew position) "F" and primary time for that mission. See also paragraph **3.2.1.5.2** ***Note***: Utilization of non-current and/or unqualified personnel is an exception to

established policy. Every effort must be made to obtain current and qualified personnel to perform aircrew duties prior to utilizing non-current and/or unqualified personnel.

3.3.2. **Secondary Flight Time.** Flight time logged by a crewmember who is performing inflight duties related to the crewmember's specialty, but who is not controlling the function of that specialty. Except as listed below, the total secondary time logged in each specialty will not exceed the total flight time. When crewmembers are in excess of the authorized crew complement, annotate in the remarks of the AFTO Form 781 the secondary duties performed by additional aircrew.

3.3.2.1. The member must be maintaining or obtaining qualification in the aircraft to log secondary time. ***EXCEPTION:*** Crewmembers in aircrew positions designated in AFI 65-503; and tasked to perform primary duties on aircraft other than their assigned aircraft (e.g., Flight Attendants tasked by TACC or HHQ to support Silver Bullet or DV missions) will log secondary time as long as they maintain currency in their primary aircraft. The member's aircrew certification code will reflect the current qualification. If not qualified in the aircraft, the member will log "X" or "O" as the aircrew qualification code first character IAW **Table A2.3**

3.3.2.2. For pilots, log secondary time while occupying a duty position having a set of flight controls and not actively controlling the aircraft, instructing, or evaluating.

3.3.2.3. For other aircrew specialties, log secondary time when actually performing inflight duties of the specialty, but not at the primary duty station established for that specialty (for example, second navigator during airdrop missions or additional PJs/CROs on AOs required to perform "in-flight duties" assisting mass aircrew/personnel on a rescue mission) when dictated by mission requirements.

3.3.2.3.1. Annotate in the remarks section of the AFTO Form 781 specific inflight duties performed and circumstances that require additional crewmembers (in additional to basic crew complement) to perform the mission.

3.3.2.4. A current Aeromedical Evacuation Crewmember (AECM) may log secondary time when performing simulated patient duties or Mission Clinical Coordinator duties during aeromedical readiness missions. A noncurrent AECM may only log Other flight time when performing simulated patient duties.

3.3.2.5. Except as provided for in AFI 65-503, the total secondary time logged in each specialty will not exceed the total flight time.

3.3.2.6. Pararescue aircrew members assigned to authorized flying billets, on active flying AOs and qualified in the MDS, who are required in addition to the normal aircrew complement to perform in-flight duties for mass rescued aircrew member/personnel missions, may log secondary time when performing simulated patient duties or Mission Coordinator duties on mass personnel recovery training missions. Secondary time is authorized only during such time those in-flight duties are performed. During periods when the PJ is not performing "in-flight" duties associated with the rescued members or mission coordinator, or non-current for that MDS, only Other flight time will be logged.

3.3.3. **Instructor Flight Time.** Flight time logged by a designated and qualified instructor while actively performing authorized instructional duties. Includes "hands on" time during

demonstration activities that are part of instructional duties. The instructor is not required to occupying a primary duty station established for that specialty, but must be actually performing instructor duties. Except as provided for in this section, members must be qualified and current in the aircraft to log instructor time. Except as provided for in AFI 65-503 and paragraph **3.3.3.1**, the total instructor flight time for each aircrew specialty will not exceed the total flight time.

3.3.3.1. Instructors may log instructor time while accomplishing unlike specialty training instruction (e.g., an instructor navigator training pilots/boom operators for a three-person crew or third pilots in the navigator seat). Only the amount of time used to train a specific event may be logged as instructor time. If more than one instructor of like specialty are on the aircraft to provide simultaneous instruction for crewmembers of different specialties, both instructors may log instructor time (e.g., two instructor navigators are on the same aircraft, one is instructing a student navigator and the other is instructing a boom operator). In this case, total instructor time logged may exceed total flight time logged. Enter a remark on the back of the AFTO Form 781 explaining the rationale for logging excess instructor time.

3.3.3.2. Two instructors (to include FTU) of the same specialty may fly together and each log instructor time; however, total instructor time logged may not exceed total flight time logged. (e.g., A new FTU instructor is flying with a student crew and a more experienced FTU instructor flies with the new FTU instructor; instruction can occur between the new FTU instructor and student or between the experienced FTU instructor and new instructor, but not both simultaneously. Therefore, the total instructor time logged may not exceed total flight time.).

3.3.3.3. Aircrew members who are instructor qualified in one aircraft, and who are current and qualified (but not qualified as an instructor) in another aircraft, may log instructor time while flying in the second aircraft and providing instruction to an aircrew member in the first aircraft. This applies to instructors in single seat aircraft who are also qualified in chase aircraft, but who do not maintain instructor qualification in the chase aircraft. Instructor time may be logged only while actively providing instruction. Enter a remark on the back of the AFTO Form 781 to explain the rationale for logging instructor time in the chase aircraft (this paragraph may be cited as a reference).

3.3.3.4. Instructors will log primary, secondary, or other time, depending on their activity, when not performing instructor duties.

3.3.3.5. Log simulator console time as instructor time when the crewmember is qualified as an instructor in the aircraft. When MAJCOMs authorize crewmembers to be instructors in the simulator only, they may log simulator console time as instructor time. MAJCOMs will determine which types of simulators qualify for this approval, e.g., operational flight trainers, weapon system trainers, etc.

3.3.4. **Evaluator Flight Time.** Flight time flown by a designated and certified flight evaluator while actively performing authorized flight evaluation duties. Includes “hands on” time if coincident with performance of flight evaluator duties. The member is not required to occupy a primary duty station established for that specialty, but must be actually performing evaluator duties. Evaluators will also log instructor, primary, secondary, or other time, depending on their activity, when not performing evaluator duties. ***Note***: Members must be

current and certified in the aircraft to log evaluator time. When flight evaluators conduct flight evaluations onboard aircraft in which they are not qualified, then members must log "O" or "X" as the aircrew qualification code first character IAW **Table A2.3**

3.3.4.1. Aircrew members who are designated and certified as a flight evaluator in one aircraft, and who are current and qualified (but not certified as a flight evaluator) in another aircraft, may log evaluator time while flying in the second aircraft and evaluating an aircrew member in the first aircraft. This applies to flight evaluators in single seat aircraft who are also qualified in chase aircraft, but who are not certified as a flight evaluator in the chase aircraft. Enter a remark on the back of the AFTO Form 781 to explain the rationale for logging evaluator time in the chase paragraph (this paragraph may be cited as a reference).

3.3.5. **Other Flight Time.** Flight time flown by members who are on the flight authorization, but who are not occupying a designated duty station or conforming to the requirements of primary, secondary, instructor, or evaluator time. For example: additional or extra crewmembers taking part in the flight, required for the mission to augment the crew or perform mission-related observation or evaluator duties (not qualified in the aircraft). Indoctrination fliers log other time. Crewmembers will log other time during periods of crew rest or sleep.

3.3.6. **Combat and Combat Support Flight Time**.

3.3.6.1. Combat. Aerial activity, engagements, or attacks conducted by aircraft against an enemy of the US or an opposing foreign force when there is risk of exposure to hostile fire. Aerial activity in support of forces engaged in combat when there is risk of exposure to hostile fire. Combat includes both elements: activity against an enemy or opposing force (or activity supporting forces engaging an enemy or opposing force) *and* risk of exposure to hostile fire.

3.3.6.1.1. As soon as possible after a combat zone is established, the Commander Air Force Forces (COMAFFOR) will identify which portion constitutes hostile airspace. Hostile airspace is airspace within a combat zone that has been specifically designated as hostile airspace by the COMAFFOR, based on risk of exposure to hostile fire. The combat zone may contain areas that are not designated as hostile airspace. For the purposes of logging combat time the aerial activity must be accomplished in a designated combat zone within the designated hostile airspace. Flight within the combat zone but outside of the designated area or areas of hostile airspace does not qualify as combat time, since there is no risk of exposure to hostile fire. (***EXCEPTION:*** In cases of aircrews that employ standoff weapons, the COMAFFOR under extraordinary circumstances may permit those aircrews to log combat time outside of the hostile airspace and/or outside of the designated combat zone. If an exception is granted, include the exception in the guidance designating the combat zone and the hostile airspace.) COMAFFOR will publish guidelines specifying which aircraft missions may log combat/combat support flight time and will identify the inclusive dates that the hostile airspace is activated for logging combat time. During contingencies when a combat zone is not designated but the use of force is authorized, COMAFFOR will coordinate with AF/A3/5 to establish hostile airspace criteria and guidelines for logging combat/combat support flight time. ***Note:***

COMAFFOR will issue new guidance and procedures every two years to ensure all Air Force units are aware of the current policy.

3.3.6.2. Combat Support. Aerial activity, engagements, or attacks conducted by aircraft against an enemy of the US or an opposing foreign force that operate outside the designated hostile airspace, where there is no risk of exposure to hostile fire. Includes aerial activity directly supporting forces engaged in combat or directly supporting those who are actively supporting combat when the aerial activity occurs outside the designated hostile airspace. Hostile airspace is determined as described above under combat time.

3.3.6.3. Combat or combat support time will be logged from takeoff to landing when an individual: (1) meets the requirements of combat/combat support flight time, (2) is on an AO that requires the member to fly, (3) is listed on the flight authorization authorized to perform in-flight aircrew duties and, (4) is required for the mission IAW paragraph **3.2.1.5** of this instruction. Additionally, eligible members authorized to fly IAW paragraph **3.6.1** may log combat or combat support time. Do not combine mission symbols; use one symbol for the entire flight.

3.4. Flight Condition Time. The categories listed in paragraph **3.3** are the basis for accumulating flying experience for all flying personnel. Record all flying time accrued on a mission in the appropriate category. Provisions have been made to record, for historical purposes, a breakout of flight time by flight condition: night, instrument, and simulated instrument. Primary time flown in more than one condition simultaneously (for example, night and instrument) would result in entries under both of these categories on the form. The type of time logged will be consistent with the flight condition actually encountered or procedure accomplished. MAJCOMs may further restrict logging combinations that are inconsistent with command policy or procedures. Use the following guidance for logging flight condition time:

3.4.1. **Night Time.** The portion of primary, secondary, instructor, or evaluator flight time logged between the end of evening civil twilight and the beginning of morning civil twilight, as published in the American *Air Almanac*. (***EXCEPTION:*** An evaluator will log night time as a flight condition in conjunction with "Other" flight time when performing evaluation duties onboard aircraft in which he or she does not maintain qualification.) For personnel assigned at latitudes above 60 degrees north (May through August) or below 60 degrees south (November through February), night requirements are waived when removal from active flying or PCS occurs during the summer months. May be logged in a flight simulator when operating in simulated night conditions.

3.4.2. **Night Vision Goggle Time.** The portion of flight time logged by an aircrew member wearing night vision goggles between the end of evening civil twilight and the beginning of morning civil twilight, as published in the American *Air Almanac*. Crewmembers performing aircrew duties in a crew position with NVG training requirements will log this time while wearing NVGs. NVG time may also be logged by flight surgeons and aircrew members instructing or evaluating individuals who are performing crew duties where NVGs are required and worn. NVG time will not exceed total night time logged. NVG time may be logged in a flight simulator if the simulator is accredited for NVG training (simulator model and simulator software).

3.4.3. **Primary Instrument Time.** The portion of primary, instructor, or evaluator flight time logged when external conditions require that the aircraft attitude be maintained primarily by reference to the flight instruments. Pilots only will log this time when performing duties in this flight condition. ***Note:*** To log primary instrument time in the aircraft, an instructor or evaluator pilot must occupy a duty station with a set of flight controls, but does not have to actively (hands-on) control the aircraft. An accredited flight simulator or flight training device may be used by a pilot to log instrument time, provided an authorized instructor is present during the simulated flight. Simulators are accredited for logging instrument time according to AFI 36-2251, *Management of Air Force Training Systems.*

3.4.4. **Primary Simulated Instrument Time.** The portion of primary, "hands-on" instructor, or "hands-on" evaluator time logged by an individual controlling the aircraft attitude primarily by reference to the flight instruments. Pilots only will log this time when performing duties in this flight condition. May be logged in a flight simulator.

3.5. Non-rated/non-CEA Flight Time. Non-rated/non-CEA aircrew members will log flying time using the proper flight authorization duty code. Log time only when authorized on AOs and when actively performing specific inflight duties as designated by flight authorization orders (paragraph **3.8**). Aeromedical evacuation crewmembers log time only when listed on the flight authorization and actively engaged in operational air evacuation or air rescue missions; aeromedical research and development inflight; or air evacuation training missions that require AECMs in a crew position, being instructed, being evaluated, or as listed in paragraph **3.3.2.4** above.

Section 3B—Logging of Flight Activity (General)

3.6. Logging Flight Time for Pay. Credit only flight time logged according to paragraph **3.2** toward incentive pay requirements. Flight time flown in "O" or "X" status does not entitle the member to OFDA credit, ACIP or HDIP. ***Note:*** See **Attachment 2**, **Table A2.3** ***EXCEPTION:*** Air Technicians (AT) and Air Reserve Technicians (ART) must be in military status to log time for incentive pay. This Air Force Instruction and MAJCOMs define the inflight duties that qualify individuals for ACIP, CEFIP, or HDIP.

3.6.1. **Logging Flight Time by Rated Officers and CEAs Who are Qualified in One Aircraft and Not Other Types of Aircraft Assigned to Their Units.** MAJCOMS and equivalent organizations, and subordinate organizations, may authorize commanders (including unit commanders) and key supervisors (API 6, 8, B, or D) who are qualified and maintain currency in one type aircraft, but have other types assigned to their units, to fly in a primary crew position in assigned aircraft in which they are not qualified. Individuals will be under the supervision of an instructor for the applicable crew position. The crewmember will log an "O" or "X" as the aircrew qualification code first character and his or her assigned second character crew position code IAW **Table A2.3** (As noted above, flight time flown in "O" or "X" status does not entitle the member to OFDA credit, ACIP or HDIP.) See also paragraph **3.3.1.1.1** Members who fly IAW this paragraph will log all applicable flight time, to include combat or combat support time (see paragraph **3.3.6.3**). Members will comply with minimum requirements in AFI 11-202 Vol 1 and in the MDS-Specific Vol 1 for aircraft in which they log flight time. (***EXCEPTION:*** Form 8/8a qualification and flight event

currency are not required in additional aircraft, unless members maintain multiple qualification.) ***Note:*** Pilots who fly under the provisions of this paragraph may fly in the seat with MEP on board the aircraft. See also paragraph **1.12.4.2**.

3.7. Logging Flight Time by Rated Officers and Career Enlisted Aviators in Inactive Flying Status. Personnel in such status do not log flying time in their specialty in US Government aircraft except as provided in FAC waivers listed in **Table 2.2**, paragraphs **2.7.2.2.**, **2.8.1.1.**, and **2.14** In all such cases, inactive crewmembers must maintain physical and physiological qualification (if applicable) for aviation service.

3.7.1. **(Added-PACAF)** Rated/key supervisors unqualified in the aircraft will log "other" time. Paragraph 2.13.1 of this supplement also applies.

3.8. Non-rated/non-CEA Crewmembers and Operational Support Flight Time. Inflight duties authorized by Air Force and MAJCOM instructions determine the proper flying duty or position symbol for logging flight time on AFTO Form 781. This flying time is accomplished when actively performing inflight duties as follows:

3.8.1. **Non-rated/non-CEA Crewmember Duty.** When on AOs and properly assigned to an authorized non-rated/non-CEA aircrew position as part of the regularly constituted crew IAW AFIs 11-401, 11-402, and 65-503, and:

3.8.1.1. The individual's primary duty requires the performance of inflight duties on a frequent and regular basis.

3.8.1.2. The approved inflight duties are essential to operating aircraft systems and associated equipment required for mission accomplishment.

3.8.2. **Operational Support (Non-crewmember) Duty.** Members are placed on AOs for a specified time and must be properly authorized to perform inflight duties not prescribed in AFI 65-503 and to supplement a regularly constituted aircrew. They are on flight status for limited periods to perform essential and specific in-flight duties that cannot be accomplished by authorized aircrew personnel. Refer to AFI 11-402 for guidance.

3.9. Logging Flight Time in Non-US Air Force Aircraft. Only members performing inflight duties authorized by paragraph **1.11** may log flying time in non-US Air Force aircraft for credit towards OFDA requirements or incentive pay. Otherwise only "Other" flight time will be credited in an individual's flight records.

3.10. Logging Other US Military Time. Total career flight time obtained in the service of other US military agencies when not officially directed by the Air Force, and when verified by logbook or other official records certified by authorized persons. This time will be entered into ARMS in the Other US Military hour block. Time obtained in other US military aircraft is not included in this category if performed in an official capacity (e.g., directed by competent Air Force order); such time is recorded as Air Force rated time. ***Note:*** Inter-service transfers who previously participated in an Air Force aviation exchange program may have their time separated by Air Force MDS. This time will be subtracted from the total Other US Military flying time.

3.11. Logging Student Time. Total career flight time acquired by rated trainees in USAF or USAF-directed undergraduate flight training prior to attaining a rating. This time will be entered into ARMS in the student time hour block. ***Note:*** Interservice transfers who previously participated in an Air Force aviation exchange program may have their time separated by Air

Force MDS. Example: Capt Schaffer, an interservice transfer, flew 350 hours in the F-16 during his Naval career under an approved Air Force exchange program. Capt Schaffer's flight time may be logged under the MDS F-16 in ARMS. This time will be subtracted from the total Other US Military flying time.

3.11. (PACAF)For Inter-Service transfer members, HARM must obtain an official military document to update "Other US Military Time" in the career total field in ARMS. Do not enter time in as individual aircraft. ***Exception:*** inter-service transfers who previously participated in an Air Force aviation exchange program may have their time separated by Air Force MDS. Table A2.1. AFTO Form 781 Entries According to TO 00-20-1.

3.12. Logging Foreign Military Time. Total career flight time obtained in the service of other governments when not officially directed by the Air Force, and when verified by logbook or other official record certified by authorized persons. This time will be entered into ARMS in the Foreign Military hour block.

3.13. Logging Flight Time in Other Than Military Aircraft. Flight time logged according to paragraph **3.2** in other than military aircraft is credited toward annual flying requirements only when directed by competent Air Force AOs and such flying is inherent in the primary duty assignment of the person concerned. Aircrews must document flight time on an AFTO Form 781 or AF Form 3250 and, except for CAP-USAF or Introductory Flying Training missions, be in aircraft with 450 or more rated horsepower.

3.14. Logging Civilian Flight Time. Total career flight time acquired in civilian aircraft of 450 or more rated horsepower, when verified by logbook or other official record certified by authorized persons. (These authorized persons are operations officers of military aviation activities; suitable agents of commercial aviation companies; operating managers of fields from which the reported flying was performed, if in privately owned aircraft; and officials of recognized civil flight schools.) This time will be entered into ARMS in the civilian hour block.

3.15. Quarterly General Officer Flying Hour Information Report. MAJCOMs will submit Quarterly GO Flying Hour Information Report (RCS: HAF-A3O[Q]0702) via message to HQ USAF/A3O-AT by the 15th of the month following each calendar quarter. This report is designated emergency status code C-3. Submit data requirements as prescribed, but they may be delayed to allow the submission of higher precedence reports. Continue reporting during emergency conditions, delayed precedence. Discontinue reporting during MINIMIZE. Provide data for operational fliers. As directed by AF/A3O-AT, provide data for indoctrination fliers. The report will include the following:

3.15.1. Rank/Name/Position. Include general officer selectees.

3.15.2. Aircraft qualification/aircrew status.

3.15.3. Flight Authorization Duty Codes.

3.15.4. Aircrew Position Indicator Code/Aviation Service Code.

3.15.5. Total flight hours/sorties in all aircraft in which the member is authorized to obtain or maintain qualification (AF Form 8) by aircraft and by flight time category. Unless directed by AF/A3O-AT, do not provide data for aircraft in which the member is not authorized to obtain or maintain qualification.

3.16. Adopted Forms.

DD Form 149, *Application for Correction of Military Record Under the Provision of Title 10, U.S. Code, Section 1552*; DD Form 2131, *Passenger Manifest* AF Form 8, *Certificate of Aircrew Qualification*; AF Form 8a, *Certificate of Aircrew Qualification (Multiple Aircraft)*; AF Form 480, *Aircrew AFSC/Active Flying Justification*; AF Form 702, *Individual Physiological Training Record*; AF Form 847, *Recommendation for Change of Publication*; AF Form 922, *Individual Jump Record*; AF Form 1042, *Medical Recommendation for Flying or Special Operational Duty*; AFTO Form 781A, *Maintenance Discrepancy and Work Document*; AFTO Form 781F, *Aerospace Vehicle Flight Report and Maintenance Document*; AFTO Form 781G, *General Mission Classification-Mission Symbols*;. AFTO Form 781H, *Aerospace Vehicle Flight Status and Maintenance Document*; AFTO Form 781M, *Status Symbols and Functional System Codes.*

3.17. Prescribed Forms.

AFTO Form 781 *ARMS Aircrew/Mission Flight Data Document*; AF Form 1887 *Aeronautical Order Aviation Service*; AF Form 3520 *ARMS Aircrew/Mission Flight Data Extract*; AF Form 4327 *ARMS Fighter Flight Authorization*; AF Form 4327a *Crew Flight Authorization.*

PHILIP M. BREEDLOVE, Lt Gen, USAF
DCS, Operations, Plans, and Requirements

(PACAF)

RUSSELL J. HANDY, Major General, USAF
Director of Operations, Plans, & Policy

(35FW)

WILLIAM D. BOWMAN, Colonel, USAF
Commander

Attachment 1

GLOSSARY OF REFERENCES AND SUPPORTING INFORMATION

References

Title 10, United States Code, Section 653

Title 10, United States Code, Section 2012

Title 32, United States Code, Section 508

Title 37, United States Code, Sections 205, 301a, 301b, and 320

DoD 4500.09-E, *Transportation and Traffic Management*, 11 Sep 2007

DoD 4515.13-R, *Air Transportation Eligibility*, 1 Nov 1994

DoD 7000.14-R, *Department of Defense Financial Management Regulations (FMRs)*, Volume 7A, *Military Pay Policy and Procedures – Active Duty and Reserve Pay*, 5 Sep 2010

JP 3-30, *Command and Control for Joint Air Operations*, 12 Jan 2010

AFPD 11-4, *Aviation Service*, 1 Sep 2004

AFPD 33-3, *Information Management*, 28 Mar 2006

AFI 10-206, *Operational Reporting*, 15 Oct 2008

AFI 10-2701, *Organization and Function of the Civil Air Patrol*, 29 Jul 2005

AFI 11-202, Volume 2, *Aircrew Standardization/Evaluation Program*, 13 Sep 2010

AFI 11-202, Volume 3, *General Flight Rules*, 22 Oct 2010

AFI 11-402, *Aviation and Parachutist Service, Aeronautical Ratings and Badges*, Nov 10 (pending)

AFI 11-403, *Aerospace Physiological Training Program*, 20 Feb 2001

AFI 11-405, *The Pilot-Physician Program*, 2 Oct 2000

AFI 11-410, *Personnel Parachute Operations*, 10 Dec 2009

AFI 11-412, *Aircrew Management*, 10 Dec 2009

AFI 11-421, *Aviation Resource Management*, Nov 10 (pending)

AFI 16-107, *Military Personnel Exchange Program*, 2 Feb 2006

AFI 16-201, *Air Force Foreign Disclosure and Technology Transfer Program*, 1 Dec 2004

AFI 21-101, *Aircraft and Equipment Maintenance Management*, 12 Apr 2010.

AFI 24-101, *Passenger Movement*, 27 Oct 2004

AFI 33-332, *Privacy Act Program*, 29 Jan 2004

AFI 33-360, *Publications and Forms Management*, 18 May 2006

AFI 35-103, *Public Affairs Travel*, 26 Jan 2010

AFI 35-105, *Community Relations*, 26 Jan 2010

AFI 36-2110, *Assignments,* 22 Sep 2009

AFI 38-201, *Determining Manpower Requirements,* 30 Dec 2003

AFI 44-170, *Preventive Health Assessment*, 10 Dec 2009

AFI 48-123, *Medical Examinations and Standards,* 24 Sep 2009

AFI 65-103, *Temporary Duty Orders,* 5 Aug 2005

AFI 65-503, *US Air Force Cost and Planning Factors,* 4 Feb 1994

AFMAN 33-363, *Management of Records,* 1 Mar 2008

AFPAM 36-2607, *Applicant's Guide to the Air Force Board for Correction of Military Records (AFBCMR),* 3 Nov 1994

Abbreviations and Acronyms

ABM—Air Battle Manager

ACC—Air Combat Command

ACIP—Aviation Career Incentive Pay

AE—Aeromedical Evacuation

AFGSC—Air Force Global Strike Command

AFMC—Air Force Material Command

AFRC—Air Force Reserve Command

AFRICOM—Africa Command

AFSOC—Air Force Special Operations Command

AFSPC—Air Force Space Command

AMC—Air Mobility Command

ANG—Air National Guard

API—aircrew position indicator

ARC—Air Reserve Component

ARM—aviation resource management/aviation resource manager

ARMS—Aviation Resource Management System

AS—aviation service

ASC—aviation service code

ASD—aviation service date

CAP—Civil Air Patrol

CEA—career enlisted aviators

CEFIP—Career Enlisted Flier Incentive Pay

CENTCOM—Central Command

CHARM—chief, host aviation resource manager

CHARMS—Consolidated Headquarters Aviation Resource Management System

CJCS—Chairman of the Joint Chiefs of Staff

COCOM—Combatant Command

COMAFFOR—Commander Air Force Forces

CONUS—Continental United States

CSO—combat systems officer

DIA—Defense Intelligence Agency

DNIF—duty not involving flying

DoD—Department of Defense

DoDFMR—Department of Defense Financial Management Regulation

DRU—direct reporting units

DSAA—Defense Security Assistance Agency

DV—distinguish visitor

EMTF—Expeditionary Mobility Task Force

ESC—entitlement status code

EUCOM—European Command

FA—flight authorization

FAC—flying activity code

FEB—flying evaluation board

FDO—foreign disclosure officer

FME—flight medicine element

FMS—foreign military sales

FOA—field operating agencies

FRF—flight record folder

FSC—flying status code

FY—fiscal year

GSU—geographically separated unit

HARM—host aviation resource management

HDIP—hazardous duty incentive pay

HPSP—Health Professions Scholarship Program

IOT&E—initial operational test and evaluation

JP—joint publication

JRF—jump record folder

MAAG—Military Assistance Advisory Group

MAJCOM—Major Command. For the purposes of this AFI, ANG is considered a MAJCOM.

MAP—Military Assistance Program

MDS—mission design series

MEP—mission essential personnel

MPF—Military Personnel Flight

NATO—North Atlantic Treaty Organization

NDAA—National Defense Authorization Act

NORTHCOM—Northern Command

OFDA—operational flying duty accumulator

OSA—operational support aircraft

OSD—officer service date

OT&E—operational test and evaluation

PACAF—Pacific Air Forces

PACOM—Pacific Command

PCA—permanent change of assignment

PCS—permanent change of station

PMAI—primary mission aircraft inventory

ROTC—Reserve Officer Training Corps

RP—remote pilot

RPA—remotely piloted aircraft

SARM—squadron aviation resource management

SEAL—sea-air-land team

SECAF—Secretary of the Air Force

SOC—Special Operations Command

SOUTHCOM—Southern Command

SSN—Social Security Number

TAD—Temporary additional duty

TARM—Tenant aviation resource management

TDY—Temporary duty

TFAP—Total Force Absorption Program

UFT—Undergraduate flying training

UMD—Unit manpower document

UPT—Undergraduate pilot training

USAF—United States Air Force

USAFA—United States Air Force Academy

USAFE—United States Air Forces in Europe

U.S.C.—United States Code

USCENTCOM—United States Central Command

USMILGP—United States Military Group

USUHS—Uniformed Services University of Health Sciences

Terms

Aircrew—As defined in AFPD 11-4, *Aviation Service,* the total complement of rated (pilots, navigators, combat systems operators, air battle managers, and flight surgeons), career enlisted aviators (1AXXX and IUXXX Air Force Specialty Codes), and nonrated aircrew (K-, Q-, or X-prefixed Air Force Specialty Code) personnel responsible for the safe ground and flight operation of the aircraft and onboard systems, or for airborne duties essential to accomplishment of the aircraft‘s mission. Includes members in initial formal training for immediate assignment to an authorized operational flying position. Individuals must be on AOs and assigned to an authorized position according to AFI 65-503, *US Air Force Cost and Planning Factors*, or nonrated aircrew not in an aircraft’s basic crew complement, but required for the mission. Aircrew members perform their principal duties inflight and their presence is required for the aircraft to accomplish its primary tasked mission. Duties must be essential to operating the aircraft or mission systems and equipment used for completing a mission, or other duties essential to the aircraft’s mission. ***Note:*** As used in the publication, the term “navigator” includes all navigator specialties and is synonymous with the designation Combat Systems Officer (CSO). New UFT graduates are designated CSOs, but previously qualified individuals will continue to be identified as navigators.

Air Force Aircraft—US Government aircraft under US Air Force jurisdiction.

Airmanship Programs (USAFA)—Any USAF Academy course listed in the catalog and administered by the 306 FTG at the Academy airfield or deployed location.

Authentication—The process that makes an administrative order official. Evidenced by proper signature or seal that a document is genuine and official. The only seal authorized on AOs is on Department of the Air Force (DAF) orders (For example: A DAF order that awards a pilot rating).

Authorized Aircrews—Aircrews authorized according to AFI 65-503, *US Air Force Cost and Planning Factors,* Attachment A36-1 (Authorized Aircrew Composition Active Forces),

Attachment A37-1 (Authorized Aircrew Composition Reserve Forces), and Attachment A38-1, (Authorized Aircrew Composition Guard Forces).

Aviation Career Incentive Pay (ACIP)—Incentive pay for rated officers in an aviation career as authorized in the Aviation Career Incentive Act of 1974, the Aviation Career Improvement Act of 1989, and the FY 96 National Defense Authorization Act.

Aviation Service Date (ASD)—Effective date of the first AO to perform flight duties. For rated officers, this date is set when the member first reports to the aviation activity that has aircraft in which he or she will receive flight training leading to an aeronautical rating and is placed on AOs (for example, class start date of SUPT, SUNT, UPT-H class, or Weapons Systems Training) or date of commission, whichever is later. For flight surgeons, the ASD equals the date all requirements for the flight surgeon rating were met, which is normally the date Course 50BY9351 or equivalent was completed. (***EXCEPTION:*** The ASD for medical students who have completed Course 50BY9351 will be the date post graduate medical training is completed, an unrestricted medical license is attained, AFSC 48XX is awarded, and the flight surgeon rating is assigned. All requirements must be accomplished for award of the ASD.) For Air Battle Managers, the ASD is the date the crewmember enters formal ABM flying training (class start date). For career enlisted aviators, the ASD is set when the member first reports to the aviation activity that has aircraft in which he or she will receive flight training leading to career enlisted aviator status and is placed on AOs. Rated ASDs and CEA ASDs are established separately. See also AFI 11-402.

Aviation Programs (USAFA)—Any USAF Academy course listed in the catalog and administered by the Dean of Faculty in conjunction with the 306 FTG at the Academy airfield or deployed location.

Career Enlisted Aviator (CEA)—Personnel in AFSCs 1AXXX and 1UXXX.

Career Enlisted Flier Incentive Pay (CEFIP)—Incentive pay for career enlisted aviators in an aviation career as authorized in the FY 00 NDAA.

Civil Air Patrol-United States Air Force (CAP-USAF)—CAP-USAF is the Air Force agency that coordinates or approves use of the Civil Air Patrol to carry out non-combat missions of the Air Force (IAW AFI 10-2701).

Commander—When used in this instruction, "commander" refers to a wing commander (or comparable level), or any level higher within the chain of command, of a flying unit to which an individual is assigned or attached for flying. If an individual is geographically separated from the wing, authority may be delegated to a group or squadron level.

Conditional Entitlement—The condition under which rated officers and career enlisted aviators in an aviation career are entitled to receive ACIP, CEFIP, or HDIP, conditional to meeting minimum monthly flying time standards IAW DoD 7000.14-R, Volume 7A; and AFI 11-421.

Continuation Training—The continuation training program provides crew members with the volume, frequency, and mix of training (flying and ground training) necessary to maintain proficiency in the assigned qualification level. This training must be recorded in the ARMS database.

Continuous Entitlement—The condition under which rated officers and career enlisted aviators in an aviation career are entitled to receive ACIP or CEFIP without regard to flight activity.

Flight—For the purpose of this instruction only, a flight is synonymous with a mission.

Flight Authorization (FA)—A single document used to identify all aircrew, operational support, and authorized non-interference members on AOs, who are qualified and required to perform duties on specific aircraft for a scheduled mission. MEP may be placed on the flight authorization, only in the Remarks section. AE/PJ FAs are attached to the aircraft FA for the mission(s) on which they performed duties.

Form—Term used to identify Air Force forms and IMTs (Information Management Tools). IAW AFI 33-360, the IMT designator is being phased out; it is not used in this publication.

Frequent and Regular—"Frequent and regular" is a DoD 7000.14-R, Volume 7A, Chapter 22, term which establishes the minimum monthly flight requirements to be entitled to conditional Aviation Career Incentive Pay (ACIP), Career Enlisted Flight Incentive Pay (CEFIP), or Hazardous Duty Incentive Pay (HDIP). DoD 7000.14-R, Volume 7A, sets the minimum at four hours for active duty (Chapter 22) and two hours for Air Reserve Components (ARC) per calendar month (Chapter 58), or a prorated share for lesser periods. By itself, the requirement to fly frequently and regularly is not justification to assign an individual to aircrew or operational support flier status. There must be a need to perform inflight duties.

Government Aircraft—An aircraft owned, operated, or leased by the US Government.

Hazardous Duty Incentive Pay (HDIP)—Incentive pay authorized for personnel required to perform flight duties on a frequent and regular basis.

Host Aviation Resource Management (HARM) Office—The office responsible for ARMS, flight record, and jump record management. The HARM office determines entitlement to ACIP, CEFIP, and HDIP.

Host Aviation Resource Manager—The sole approval authority (except for AF/A3O-AT) at each flying base for determining entitlement and the starting and stopping of ACIP, CEFIP, and HDIP for flying and parachute duties; responsible for interpreting public law as it pertains to entitlement to these incentive pays along with auditing and reconciliation of these incentive pays; and the single point of contact for ARMS. This position is inherently governmental.

Instrument Flight—Flight conducted when external conditions require that the aircraft attitude be maintained primarily by reference to the flight instruments.

Intent—For the purpose of publishing an AO, the intent of an AO is to validate individual qualification for aviation and/or parachutist service, authorize and direct frequent and regular participation in aerial flight or parachute duties; and establish or terminate individual entitlement to ACIP, CEFIP, and HDIP. Intent also includes the effective date of the AO.

Interfly—The exchange and/or substitution of aircrews and aircraft between MAJCOMs.

Mission—For the purpose of this instruction only, mission is defined as a primary objective for which an aircraft is operated (see Mission Symbols) and which may consist of an increment of one or more sorties. Several missions may be accomplished in one sortie.

Mission Essential Personnel (MEP)—personnel who are required for the execution of the aircraft or unit mission, to include follow-on missions. Includes additional aircrew members required for follow-on missions (may be further defined in MAJCOM supplements to this instruction) and personnel not authorized AOs who are tasked to perform ground support duties

at enroute locations or destination points that are directly related and essential to accomplishment of the aircraft or unit mission, e.g. a specialist or technician required to provide aircraft support or a security team required to guard the aircraft. MEP may include military staff personnel; U.S. Government employees; government contract employees (IAW the terms and conditions of a current government contract); and foreign military, civilian, and contract employees (IAW the terms and conditions of a current government contract); when those individuals are required for the mission. Flights involving foreign nationals must be reviewed for foreign disclosure requirements and political concerns, to include compliance with AFI 16-201, and must include SAF/IA regional division coordination. MAJCOMs may further define MEP in supplements to this instruction but guidance may not be less restrictive than the guidance contained herein. The OG/CC (or equivalent) with operational control of the aircraft grants MEP status. (***EXCEPTIONS:*** For AMC missions already in the system, the TACC Senior Controller may approve MEP status. MAJCOM Standardization/Evaluation Chiefs may approve MEP status for MAJCOM or MAJCOM-gained missions for evaluators assigned to the MAJCOM.) If operational control transfers, the OG/CC (or equivalent) who assumes follow-on operational control may continue/revise MEP status (coordinate changes with originating authority). MAJCOMs may establish intra-command and inter-command guidance to facilitate this process. MEP, to include additional crewmembers who fly in MEP status, are passengers and may only fly in aircraft capable of carrying passengers IAW the provisions of DoD 4515.13-R. (***EXCEPTION:*** MEP who are mission essential may fly on aircraft not normally equipped for carrying passengers. MEP who fly under the provisions of this exception must be physically and physiologically [when required] qualified and must complete applicable egress training prior to flight.)

Officer Service Date (OSD)—Effective date of service as a commissioned, warrant, or flight officer, whether or not served on extended active duty. This is usually equivalent to total federal commissioned service date backdated by any period served as a warrant or flight officer. For flight surgeons, the OSD includes constructive service granted medical officers in the computation of creditable service for basic pay.

Operational Flying—Flying performed under competent orders by rated and CEA personnel (primarily for mission, support, or training purposes) while serving in an assignment where basic flying skills usually are maintained for performing assigned duties.

Operational Support Flier—An individual whose primary, full-time duty does not require flying. The Air Force may require these individuals to fly on an occasional basis to perform a specific, essential inflight duty that cannot be performed by an assigned aircrew member. Duties may include, but are not limited to inflight test, operation, or inflight maintenance of specific aircraft systems or installed equipment. To receive non-crew hazardous duty pay, operational support fliers must be placed on AOs and complete prescribed flying hour requirements. Authorized man-months are required prior to issuance of AOs.

Orientation Flight—Continuous flights in DoD-owned aircraft performed within the local flying area and terminating at the point of origin, conducted to reward and motivate individuals (incentive orientation flights only), ensure a better understanding of a particular weapon system and its role, or when the flight is determined to be in the best interest of the USAF.

Pilot In Command—The aircrew member designated by competent authority as being in command of an aircraft and responsible for its safe operation and accomplishment of the assigned mission.

Point-To-Point—Point-to-point means flights that takeoff from one location and land at a different location. Point-to-point orientation flights are not authorized. ***EXCEPTION:*** Units may accomplish orientation flights within the local flying area to operational and remote sites that are part of the home unit, as long as the mission terminates at the point of origin. Such flights providing unit mission orientation are not considered point-to-point flights and an exception to policy is not required (OSD-ATL policy guidance, Feb 10).

Sortie—An AFTO Form 781 aircraft sortie begins when the aircraft begins to move forward on takeoff or takes off vertically from rest at any point of support. It ends after airborne flight when the aircraft returns to the surface and either of the following conditions occur: a) the engines are stopped, or the aircraft is on the surface for five minutes, whichever occurs first; or, b) a change is made in the crew which enplanes or deplanes a crewmember. For logging aircrew proficiency training, on missions during which some crewmembers deplane and the remaining crew from the original takeoff re-launch, this may be considered to be a continuation of the original aircrew sortie. MAJCOMs may establish MDS-specific crew requirements and procedures for aircrew continuation sorties.

Supervisory Aircrew or Staff Member—Personnel in supervisory or staff positions (API 6, 8, B, and D) who actively fly; or in positions (API 3, 4, C, and E) that require aircrew expertise but individuals are not required to fly.

Training Level—Assigned to individuals based on the continuation training aircrew status (basic aircraft qualification, basic mission capable, or mission ready/combat mission ready) they are required to maintain.

Training Period—Any training period determined by the MAJCOM or Wing in which training requirements are performed.

Unit Commander—When used in this instruction, “unit commander” refers to the squadron commander (or comparable level) or higher level within the chain of command.

Attachment 1 (PACAF)

GLOSSARY OF REFERENCES AND SUPPORTING INFORMATION

References

AFI 11-202 Volume 1, *Aircrew Training*, 22 November 2010

AFI 11-202 Volume 2, Aircrew Standardization/Evaluation Program, 13 September 2010

AFI 11-202 Volume 3, General Flight Rules, 22 October 2010

AFI 11-301, PACAF Sup 1, *Aircrew Life Support (ALS) Program*, 12 April 2012

AFI 11-402, *Aviation and Parachutist Service, Aeronautical Ratings and Aviation Badges*, 13 December 2010

AFI 11-403, *Aerospace Physiological Training Program*, 20 February 2001

AFI 11-412, *Aircrew Management*, 10 December 2010

AFI 11-421, *Aviation Resource Management*, 13 December 2010

AFI 13-207, *Preventing and Resisting Aircraft Piracy (Hijacking) (FOUO)*, 21 June 2010

AFI 16-107, *Military Personnel Exchange Program*, 2 February 2006

AFI 16-201, *Air Force Foreign Disclosure and Technology Transfer Program*, 1 December 2004

AFI 48-123, *Medical Examinations and Standards*, 24 September 2009

Adopted Forms

AF Form 480, *Aircrew AFSC/Active Flying Justification*

AF Form 614, *Charge-Out Record*

AF Form 702, *Individual Physiological Training Record*

AF Form 899, *Request and Authorization for Permanent Change of Station – Military*

AF Form 1042, *Medical Recommendations for Flying or Special Operational Duty*

AF Form 1522, *ARMS Additional Training Accomplishment Report*

AF Form 1887, *Aeronautical Order (PA) Aviation Service*

AF Form 3520, *ARMS Aircrew/Mission Flight Data Extract*

AF Form 4323, *ARMS Multi-Crew Jump Record*

AF Form 4324, *Aircraft Assignment/Aircrew Qualification Worksheet*

AF Form 4327, *ARMS Fighter Flight Authorization*

AF Form 4327a**,** *Crew Flight (FA) Authorization*

AFTO Form 781, *ARMS Aircrew/Mission Flight Data Document*

Abbreviations and Acronyms

ACR—Authorization Change Request

AE—Aeromedical Evacuation

AEAO—Airborne Emergency Action Officer

AECC—Aeromedical Evacuation Control Center

AFRIMS—Air Force Records Information Management System

AGL—Above Ground Level

AMD—Air Mobility Division

AMOCC—Air Mobility Operations Control Center

AO—Aeronautical Order

APT—Awaiting PCS Training

AUR—Aircraft Utilization Report

CAF—Combat Air Forces

CAP—Critical Action Procedures

CD—Core Document

CJSOAC—Combined Joint Special Operations Air Component

COMPACAF—Commander Pacific Air Forces

CONOPS—Concept of Operations

CRO—Combat Rescue Officer

CSAR—Combat Search and Rescue

DAFSC—Duty Air Force Specialty Code

DIRMOBFOR—Director Mobility Forces

DV—Distinguished Visitor

EOM—End of Month

ESP—Electronic Staff Package

FAA—Federal Aviation Administration

FAM—Familiarization

FEF—Flight Evaluation Folder

FRP—Flight Record Package

FS—Flight Surgeon

GDSS—Global Decision Support System

IDS—Individual Data Summary

JRP—Jump Record Package

MAF—Mobility Air Forces

MAR—Mission Accomplishment Report

MAW—Marine Aircraft Wing

MCD—Medical Crew Director

MDG—Medical Group

MDS—Mission Design Series

MILPDS—Military Personnel Data System

MIS—Maintenance Information System

MOS—Maintenance Operations Squadron

MPS—Military Personnel Section

MRT—Maintenance Recovery Team

MX—Maintenance

NAF—Numbered Air Force

NMR—Non-Mission Ready

NUSIC—Non-US Identity Code

OG—Operations Group

OSF—Operational Support Flier

OSS—Operations Support Squadron

OPCON—Operational Control

OPLAN—Operations Plan

OPR—Office of Primary Responsibility

PD—Personnel Document

PEX—Patriot Excalibur

PIC—Pilot In Command

PJ—Pararescue

PS&D—Plans, Scheduling and Documentation

RDS—Records Disposition Schedule

SEPT—Situational Emergency Procedures Training

SERE—Survival, Evasion, Resistance and Rescue

SG—Surgeon General

SSS—Staff Summary Sheet

SUPT—Specialized Undergraduate Pilot Training

TACC—Tanker Airlift Control Center

TACON—Tactical Control

TAR—Training Accomplishment Report

WX—Weather

Attachment 2

INSTRUCTIONS FOR USING AFTO FORM 781, ARMS AIRCREW/MISSION FLIGHT DATA DOCUMENT

A2.1. Purpose. The AFTO Form 781-series provides maintenance, inspection, service configuration, and flight operations records for weapon or support systems. AFTO Form 781, *ARMS Aircrew/Mission Flight Data Document*, is the source document for recording and reporting operational flight or training device information for each individual authorized to take part in a mission. This form is the primary record of both personnel and aerospace vehicle flying hours. It is the official record to validate flight pay eligibility for rated, CEA, and other non-rated**/non-CEA** officer and enlisted members required to fly. The original AFTO Form 781 must be maintained in the HARM office that services the unit to which the aircraft is assigned. This form is available for downloading on the e-publishing website at **www.e-publishing.af.mil**.

A2.2. Scope. These instructions apply to all members authorized to log flight or training device time in an airborne duty or position for the purpose of maintaining an official Air Force Flight Record.

A2.3. Responsibilities. The AFTO Form 781 is established by TO 00-20-1. In most cases, maintenance personnel are responsible for distributing and collecting these forms. Completing the AFTO Form 781 and other forms in the series is a joint responsibility of maintenance personnel and the pilot in command.

A2.3.1. The crew chief or alternate ensures a sufficient number of copies of AFTO Form 781 are onboard the aircraft and completes items 2 through 5 on a sufficient number of copies to fulfill mission requirements. If the forms are generated in advance, the pilot in command will confirm with maintenance personnel the correct data for items 2 and 3. (N/A for RPA units.)

A2.3.2. The pilot in command ensures the AFTO Form 781 is dated and properly completed to show all pertinent flight data and the flight time for all personnel authorized to take part in the flight. The pilot in command will initial block 40 IAW **Table A2.1**

A2.3.3. The completed AFTO Form 781 must be processed in the maintenance information system and delivered to the SARM for ARMS updating, then provided to the HARM office. (N/A for RPA units.)

A2.3.3.1. The local HARM office will provide the maintenance organization that services the aircraft assigned the necessary organization and location information to be entered in items 4 and 5 of AFTO Form 781. This ensures completed forms are sent to the proper SARM or HARM office for entry into ARMS. (N/A for RPA units.)

A2.3.3.2. Ensures an aviation resource manager or designated operations representative audits the unit's AFTO Forms 781 for accuracy and eligibility and initials in item 41 of the form before sending it to the HARM office. Where local procedures establish the HARM office as the auditing agency, the responsible individual from that office initials the form in item 41.

A2.3.3.3. The original AFTO Form 781 must be provided to the HARM office that services the unit to which the aircraft is assigned no later than 5 days after the end of the

month in which the flights were performed. For example, the Form 781 for a flight flown in March must be turned in to the servicing HARM office NLT 5 April. ***EXCEPTION:*** ARC units that track/maintain ACIP and CEFIP entitlement information may forward the AFTO Forms 781 to the servicing HARM office not later than the first day following two months after the month in which the flight was performed. In the preceding example, the forms would not be required to be turned into the HARM office until 1 June.

A2.3.3.3.1. SARM offices will not maintain duplicate copies of AFTO Forms 781 (including extracts). If changes are required after the flight information has been entered in ARMS and the form is at the HARM office, the pilot in command must contact the HARM office to make corrections.

A2.3.3.4. RPA units will maintain the original AFTO Form 781 in the HARM office of the unit designated to perform to the mission.

Table A2.1. AFTO Form 781 Entries.

ITEM	***ENTER***
2	MDS designator from AFTO Form 781F, item 12. Example F016A.
3	Enter the aircraft serial number. Use the following format for entry in ARMS, last two digits of the year, followed by a dash, then the last four digits of the tail number. Example: 83-0142.
4	Organization to which the aircraft is assigned. Show command designation in parentheses (for example, 52 FW (USAFE) and the four-letter code of the HARM office which serves that organization (obtain from the unit HARM/SARM Office). This will be the HARM office that processes and files the original forms.
5	The name of the installation whose HARM office services the unit charged for flying hours identified in item 4 and processes and files the original AFTO Form 781.
AFTO FORM 781 ENTRIES (CERTIFIED BY THE PILOT IN COMMAND)	
1	Date. Use the Greenwich Mean Time (GMT) date in the following ARMS compatible format: (Example) 22 Sep 2010.
6	The flight sequence of each particular leg of the flight.
7	Mission number assigned for this leg of the mission (MAJCOM option).
8	Authorized mission symbol for each flight. Aircrew may enter all flights on the same GMT date on a single AFTO Form 781.
9	International Civil Aviation Organization (ICAO) code for the base or airport where the aircraft takes off. If a flight is continued from a previous entry, enter “INFL.” Use “XXXX” for classified locations or locations without an official ICAO identifier (i.e. a CV-22 landing in a field).
10	Base ICAO code for the base or airport where the aircraft lands. If a flight is terminated without landing for a change in mission symbol, enter “INFL.” Use “XXXX” for classified locations or locations without an official ICAO identifier.

11	24-hour GMT clock time. The takeoff time is when the aircraft begins to move forward on takeoff roll.
12	24-hour GMT clock time. The landing is when the aircraft is on the ground after being airborne and any of the following conditions occur: (a) The engines are stopped and shutdown occurs at or before five minutes after touchdown. (b) The aircraft has been on the ground for five minutes after touchdown; however, a series of practice landings is considered one flight. (c) A change is made in the crew where a crewmember enplanes or deplanes. ***Note:*** When a flight starts before 2400 GMT and ends after GMT midnight (2400Z), record and report the flight on the date of takeoff. A separate AFTO Form 781 is not necessary.
13	Subtract takeoff time from landing time. Use the conversion table to the right to convert to hours and tenths, and enter the result.
14	Number of touch-and-go, full stop, and total landings.
15	Number of sorties accomplished. A sortie covers a flight from first take off to landing as described in block 12; however, if any flight entry is split (INFL), the sortie will be recorded on the flight that lists final landing.
16	Special use as specified by MAJCOM.
17	Flight authorization number generated in the SARM as specified in AFI 11-421. (MAJCOM option.)
18	Unit issuing the flight authorization and designated to perform this mission will be annotated using the four-digit unit number. Use leading zeros when the unit number has fewer than four digits (0179AW).
TOTALS	Sum of flight sequences “a” through “f” for total flight time, landings, and sorties at the end of the mission.
19	Four-digit unit number to which the crewmember is assigned/attached for flying purposes. Use leading zeros when the unit number has fewer than four digits.
20	Last four digits of the SSN of the crewmember. An error in this entry will result in time being lost or credited to another crewmember.
21	Crewmember’s last name (printed). May use additional characters if another member in the unit has the same last name.
22	Flight Authorization (FA) Duty Code assigned on the FA to the crewmember for this mission. This code cannot be higher than the individual’s current qualification, but will indicate duties that the individual crewmember is scheduled to perform on the mission. For example, if the individual is an IP, but is scheduled to perform MP duties on a mission, the individual will be listed as an MP on the Flight Authorization. Refer to **Table A2.3** for a complete list of duty codes. ***Note:*** The only time the FA code will not match the scheduled duties on the FA is for extenuating circumstances. The AC must document the reason in the remarks of the AFTO Form 781. For example, a pilot was scheduled to perform IP duties in

	conjunction with upgrade training for a second pilot; however, the upgrading individual was DNIF and did not fly, so the pilot only performed primary duties. MP is logged with primary time and the AC documents the reason in the remarks section. When using the FA more than one day, log FA Duty Code actually performed and annotate in remarks if different from the FA.
23-28	Times in hours and tenths for each category as defined in **Chapter 3** of this instruction. The total time in item 28 cannot exceed the grand total in item 13 and total of items 23 through 27 cannot exceed item 28.
29	Total number of sorties for this crewmember. Entry is normally the grand total (see item 15, above).
30, 33, 34, 36	Hours and tenths of time performed in night, instrument, simulated or NVG conditions, as defined in **Chapter 3** of this instruction.
35, 37	Number of Combat and Combat Support Sorties flown that meet requirements as defined in **Chapter 3** of this instruction.
38	Air Reserve Component Flight Duty Status Code for the crewmember, if applicable. If used: 1=Active Duty, 2=Unit Training Assembly (Inactive Duty), 3=Flying Training Period (Inactive Period), 33=Dual Additional Flying Training Period (Inactive Duty), 4=Civilian (ART). Include separate lines to record the flying time accomplished in each Flying Duty Status Code.
39	Initials of maintenance personnel at the debriefing who reviewed the form. (N/A for RPA units geographically separated)
40	Initials of the pilot in command who certifies the form for accuracy. For multiple sorties, if the pilot in command changes, the individual acting as the pilot in command must initial for their particular sortie in the sortie block. If the pilot in command changes during any single sortie, the last individual to act as the pilot in command for that sortie will initial in the sortie block.
41	Initials of the unit operations officer or Aviation Resource Manager (ARM) who verifies the accuracy and legibility of the form prior to entry into ARMS.
42	Date (e.g., 22 Sep 2010) and initials of the ARM who input and audited the form.
43	Date (e.g., 22 Sep 2010) and initials of the ARM who audited and processed the form.

Table A2.1. (PACAF) AFTO Form 781 Entries

ITEM	***ENTER***
AFTO FORM 781 ENTRIES (CERTIFIED BY THE PILOT IN COMMAND)	
6	The mission identifier from the flight authorization.
12	New forms are not required if a flight begins on one ZULU date and terminates on the next ZULU date. A new form is required for the next leg of that mission that begins on a new ZULU day.
16	Enter the flying organization that published the authorization for the flight.
40	If during multiple sorties the pilot in command does NOT change, only one set of initials by the pilot in command is required (certifies form for all sorties).
Remarks	Remarks must be annotated on the back of the AFTO Form 781 for the following: - Excess crew compliment in AFI 65-503 as pertains to primary, secondary, or instructor flight time totals IAW Chapter 3 (Basic AFI) - Pararescue duty remarks for flight time logged IAW paragraph 3.2.2. (Basic AFI)- Annotate specific mission duties to support secondary time logged IAW paragraphs 3.3.2.3. and 3.3.2.3.1. (Basic AFI). - Inactive flight surgeon remarks IAW paragraph 2.8.1.1. (Basic AFI) - Flight Authorization and AFTO Form 781 Duty Code mismatch reason IAW Table A2.1, item 22 and paragraph A4.3.2. (Basic AFI) - Rated officers and CEAs tasked to perform in-flight non-crew duties under Aircrew Position Identifier (second character of duty position) "Z" IAW Table A2.3., Note 6. (Basic AFI) - Unit designation and SARM or HARM DSN and FAX number for extracted aircrew and operational support members IAW paragraph A2.4. (Basic AFI) - Operational Support Flier (OSF) in-flight duties performed in support of primary flight time with Aircraft Commander, Senior OSF, or Medical Crew Director's (MCD) signed certification IAW AFI 11-402. - Logging instructor/evaluator time in the chase aircraft IAW paragraphs 3.3.3.3 and 3.3.4.1. (Basic AFI)

A2.4. Extract AFTO Form 781. Each individual on the form whose flight records are maintained by another HARM office prepares a data extract photocopy of the original AFTO Form 781 to be sent, usually within five duty-days, to that member's HARM office. Extracted individual(s) will place their squadron's contact information (unit designation and SARM or HARM DSN/FAX number) in the remarks section of the AFTO Form 781. If more than one individual named on the form is serviced by the HARM office, a single data extract copy may be used. For example Captain Grengs, a pilot from Minot AFB, flew a mission at Grand Forks AFB. A photocopy of the AFTO Form 781 is made, certified in item 43, and sent to the HARM office at Minot. Extracts at the same base for aircrew members serviced by the same HARM office are not authorized.

A2.4.1. Individuals whose flight records have been closed out to transfer custody must prepare a data extract form for each authorized flight during that period.

A2.4.2. The data extract AFTO Form 781 is an exact copy of the original AFTO Form 781.

A2.4.3. Upon receipt of an extract, member's servicing SARM/HARM personnel will lightly line through individual mission data lines of members not in the local ARMS database, leaving only the members they will enter in ARMS. The SARM office responsible for management of the original AFTO Form 781 will have a line lightly drawn through members who were extracted (not from aircraft's home station).

A2.4.4. The data extract form is identified and certified in item 43, either by a commissioned officer (preferably the pilot in command), a government civilian (when pilot in command), or by the HARM Chief/Superintendent.

A2.4.5. See **Attachment 3** for an extract authorized for non-operational, long TDYs.

Table A2.2. Authorized Mission Symbols.

Authorized Mission Symbols (***Note:*** Only mission symbols listed in this table are valid. In ARMS the mission symbol is a five-character field. The first two characters must be IAW this table. MAJCOMs may assign additional characters as required (see Notes 1 and 2 at end of table).	
CA, CC, Air Rescue CF Coded Aircraft Missions, and TF Coded Aircraft Missions as applicable	
A1	**Scheduled Flights**. Missions where the main goal is to move cargo or passengers on a scheduled frequency.
A2	**Scheduled Air Evacuation Flights.** Missions where the main goal is to move patients on a scheduled frequency.
A3	**Nonscheduled Air Evacuation Flights.** Missions where the main goal is to move patients who require immediate evacuation to the proper treatment facility.
A4	**Nonscheduled Logistics.** Missions where the main goal is to move cargo or passengers on other than scheduled flights.
A5	**Positioning or Repositioning.** The nonproductive part of a flight that is required to locate an aircraft at a station for onloading or returning an aircraft to home station.
A6	**Tactical Training.** Missions where the main goal is joint airlift that includes personnel and equipment or supply drops.
A7	**Other.** Classified or other special missions.
A8	**Contingency Operations.** Contingency missions directed by HQ USAF.
A9	**United Nations (UN) Missions.** Missions in support of UN operations, as directed by HQ USAF.
SUPPORT MISSIONS (CA and Z coded operational support aircraft only)	
S1	**Administrative.** Missions in which the main purpose is aerial transportation of personnel accomplishing executive and administrative functions. These include staff or command ordered flights. Also includes Air Reserve Officer Training Corps (ROTC) and Civil Air Patrol (CAP) orientation flights and similar flights.
S2	**Personnel.** Missions in which the main purpose is to move personnel by air. This symbol includes courier flights. It does not include flights by Air Mobility Command (AMC) common user passenger or cargo transports completing single manager operations for airlift services.
S3	**Material and Supplies.** Missions in which the main purpose is to move material and supplies by air. Does not include flights by AMC common user passenger or cargo transports completing single manager operations for airlift services.
S4	**Logistics.** Missions in which the main purpose is to move personnel, material, and sup-

	plies by air. This symbol includes flights in direct support of combat and combat support unit operations. Does not include flights by AMC common user passenger or cargo transport.
S5	**Special.** Missions in which the main purpose is to complete specific special activities of the Air Force and other governmental agencies, such as: target missions for air defense purposes, tow missions for defense and tactical forces, local search and rescue, civil relief, mercy missions and air demonstration flights.
S6	**Navigational Aids (NAVAIDS) Check.** Missions in which the main purpose is to flight-check radar and NAVAIDS.
S7	**Aircrew Qualification.** Missions in which aircrew members who occupy aircrew or designated instructor crew positions complete standardization and instrument check flights as well as qualification and currency flights.
S8	**Support Training.** Missions in which the main purpose is to meet semiannual flight requirements (including instrument and qualification checks) as prescribed by this instruction. This symbol is used by "behind-the-line" aircrews who are not assigned to designated aircrew positions.
TRAINING MISSIONS (*Note:* T mission symbols used by force structure aircraft in assignment codes CB, CC, CF, CA, and TF.)	
T1	**Student Training.** Missions where the main goal is to instruct and train pilots and air crew under the direction of Air Education and Training Command (AETC) or other USAF activities engaged in formal student instruction (include flying of instructors in the course of student training).
CA, Air Rescue CF Coded Aircraft Missions, and TF Coded Aircraft Missions as applicable	
T2	**Formal Major Weapon System (MWS) Training.** Instruction and training of pilots and crews undergoing initial MWS crew training in designated Formal Training Units.
T3	**Operational Training.** Missions where the main goal is gunnery, bombing, reconnaissance, navigation, instrument, target missions for air defense purposes, towing targets, search and rescue, transportation of cargo or personnel (excludes flights of AMC common user passenger or cargo transports accomplishing single manager operations for air lift service), and continuation training.
T4	**Special.** Missions in which the main purpose is the direct support of nonmilitary activities such as civil relief, mercy missions, health, communications, public works, and others contributing to the economic and social well-being of the nation.
T5	Reserved for future use
T6	Low Level Missions (defined by MAJCOMs).
T7	Reserved for future use
T8	**Tanker Task Force Support.** Missions flown by TDY (deployed) tanker aircrews in support of regional tanker task forces (excluding counter narcotics).

T9	Reserved for future use.
OPERATIONS MISSIONS	
O1 / O2	As directed by HQ USAF.
O3	**Aircraft Delivery.** Aircraft delivery flights under the control of Air Combat Command (ACC), including inter-command transfers; US Air Force, Navy, or other pilots attached to ACC for purposes of delivering aircraft delivery organizations as well as "borrowed" crews. Also includes aircraft deliveries other than under ACC control.
O4	**Test.** Missions where the main goal is engineering testing of aerospace vehicles (including the airframe, propulsion units, and components that are integral parts of the vehicle being tested).
O5	**Direct Test Support.** Missions which are performed in direct support of research, development, test or engineering program for data acquisition. Includes flights to and from test locations.
O6	**Indirect Test Support.** Missions in which the main goal is to accomplish simulated mission profiles in preparation for approved test programs. Included in this category are missions in E, D and CB coded aircraft in which the main goal is proficiency flying training, initial checkout, requalification, annual instrument and proficiency check, etc.
O7	**Special (Air Force Materiel Command [AFMC] use only).** Missions performed in E and CF coded aircraft that do not fall within the categories explained above and missions in B or D coded unairworthy aircraft to relocate a damaged aircraft to a repair facility. Includes missions such as search and rescue, demonstrations, record attempts, flight inspections, traffic control and landing system (TRACALS) evaluations, and air traffic control operational evaluations.
O8	**Maintenance Tests.** Missions where the main goal is to perform functional check flights after completing inspections or maintenance to make sure that the aircraft is airworthy and capable of mission accomplishment. This symbol applies to aircraft in all assignment codes.
CA and Air Rescue CF Coded Aircraft Missions	
O9	**Operational Reconnaissance.** Aerial activity or engagements conducted by committed units or aircraft that have as a main goal higher headquarters directed reconnaissance missions that do not fall in the other categories explained above. This symbol applies to peacetime air defense scrambles.
P1-P5	As directed by HQ USAF (See Note 1).
P6	Counter-Narcotics Support. Missions flown in support of Counter-Narcotics operations.
P7-P9	As directed by HQ USAF (See Note 1).
R1-R9	As directed by HQ USAF (See Note 1).
C1	AIRBORNE ALERT MISSIONS (defined by MAJCOMs).

C2-C9	As directed by HQ USAF (See Note 1).
A - Z	Mission symbol letters not listed are to be used as directed by HQ USAF. Units must receive permission from HQ USAF/A3O-AT prior to using mission symbols not specified in this table.

OPERATIONS NOTES:

1. For the P, R, and C mission symbols, use the following third character suffixes to identify missions flown by specific MAJCOM: AMC use A, B, C; ACC use D, E, F; USAFE use G, H, I, J; PACAF use K, L, M; AFSOC use N, O, P; ANG use Q, R, S; and AFRC use T, U, V; AETC use W, X, Y and AFMC use Z. Guard and Reserve units will coordinate with their gaining MAJCOM to determine if the Guard/Reserve or active duty MAJCOM suffix will be used. MAJCOMs will provide HQ USAF/A3O-AT a copy of directives on the use of these mission symbols.

2. For all missions flown in designated combat areas, make the third character an A to differentiate those combat missions where aerial delivery/recovery of airborne forces/equipment, ordnance expended, or direct exposure to hostile fire occurred. The suffix B is used on designated combat missions established by HQ USAF that result in personnel tour curtailment or other personnel actions.

TRANSPORTATION WORKING CAPITAL FUND (TWCF) FUNDED AIRCRAFT MISSION CLASSIFICATIONS (L, M, and N for force structure aircraft in assignment codes CA, CC, TF, and IF)

L1-L8	**Contingency.** Special transport missions that support contingency plans and test exercises. HQ AMC assigns symbol in the operation order (OPORD). If no OPORD is writ ten, AMC's Tanker Airlift Control Center (TACC) assigns symbol to be used.
M1	**Cargo.** Scheduled transport missions where the main goal is to move cargo.
M2	**Passenger or Patients.** Scheduled transport missions in which the main goal is to move passengers or patients. Suffix “L” is reserved for patient flights. Suffix “P” is reserved for passenger flights.
M3	**Cargo or Passengers.** Scheduled transport missions in which the main goal is to move mixed loads (cargo or passengers).
M4	**Positioning for Channel.** Locating an aircraft at a station for channel traffic onloads. This includes missions from the offload station of a special assignment airlift mission (SAAM) or contingency mission to the onload station of a channel traffic mission.
M5	**Depositioning for Channel.** Returning an aircraft to home station from channel traffic offload station and to return an aircraft to backup position from an offload or termination point of any mission where backup equipment has been used.
M6	**Special Assignment.** Transport missions in which the main goal is to complete special assignment airlift missions. These missions include hours logged from the time the air craft departs home station or is diverted from channel traffic (scheduled mission) until the aircraft returns to channel traffic operations.

M7	**Non-revenue.** Nonscheduled missions operated in support of the airlift force other than exercises.
M8	**Joint Airborne or Air Transportability Training.** Transport missions where the main goal is joint airborne training.
N1	**Training and Standardization.** Training and standardization evaluation flights for personnel assigned or attached to a tactical or transport unit.
N2	**Tactical Training.** Unilateral tactical training other than joint airborne training. This includes airdrop, formation flying, and low-level navigation training missions.
N3	**Search.** Transportation Working Capital Fund (TWCF) funded aircraft diverted to perform search missions. Symbol is used starting with time of diversion until aircraft returns to normal mission.
CA and Air Rescue CF Coded Aircraft Missions	
N4-N8	**Reserved for Future Use.** These symbols are used to complement the contingency mission symbols as assigned by TACC.
SIMULATOR TRAINER CLASSIFICATIONS	
Q1	**Student Training.** Instruction and training of pilots and crews under the direction of AETC or other US Air Force activities engaged in formal student instruction.
Q2	**Mission Training.** Synthetic trainer or simulator missions where the main goal is training tactical and support aircrews.
Q3	**Maintenance Tests.** Performance of functional check flights.
Q5	**Simulator Test.** Missions to acquire data or verify simulator performance, handling qualities, and systems.
SIMULATOR NOTES: 1. Suffix “E” is reserved for engineering tests (hardware, software design, or development). 2. Suffix “F” is reserved for human factors research missions.	

Table A2.2. (PACAF) Authorized Mission Symbols

OPERATION NOTES: (Added) Combat Air Force (CAF) aircraft will follow Headquarters Air Combat Command (HQ ACC) guidance for authorized mission symbols. Mobility Air Force (MAF) aircraft will follow Headquarters Air Mobility Command (HQ AMC) guidance for authorized mission symbol.

A2.4.6. **Flight Authorization Duty Codes.** Flight authorization duty codes identify the aircrew member's flight duty status. They are four (or more) letter codes and MAJCOMs have the option to specify the third, fourth and any additional characters.

A2.4.6. **(PACAF)** Flight Authorization Duty Codes. PACAF will use applicable lead command guidance (AFI 11-401, MAJCOM Supplement) for third, fourth and fifth flight authorization duty codes.

A2.4.7. **(Added-PACAF)** USAF Flying Hour Program.

A2.4.7.1. **(Added-PACAF)** Operations is charged with the overall accountability of the USAF Flying Hour Execution Program from allocation, through execution, to reporting back to their respective MAJCOM Flying Hour Program Manager.

A2.4.7.2. **(Added-PACAF)** Wing Current Operations will ensure squadron SARMs on a daily basis reconcile their daily aircraft utilization reports (AURs), utilizing the AFTO Forms 781 as a source document, with maintenance debrief**,** which inputs the top half of the AFTO Form 781 into the Maintenance Information System (MIS) database. If there are any discrepancies between operations (SARM) and maintenance debrief, the discrepancies should be reconciled the next duty day or as soon as possible. This process should be carried over until the end of the month, but keep in mind that the MIS cut-off date is the fourth day of the following month. In addition, the SARM will validate the EOM flying hour totals with Maintenance Operations Squadron (MOS) Plans, Scheduling, and Documentation (PS&D) not later than the third day after the close out of a given month.

A2.4.7.3. **(Added-PACAF)** Once all flying hours/sorties have been validated and corrected for current month, squadron SARMs and MOS PS&D will sign the AUR and send their EOM flying hour reports to Wing Operations by the fifth day of each month for consolidation. Neither the SARM nor MOS PS&D will forward any flying hour reports to Wing Operations until the flying hours/sorties have been validated and correcte**d.**

Table A2.3. Flight Authorization Duty Codes

Aircrew Qualification Codes (First Character)		**Valid to allow aircrew members to meet requirements for OFDA, ACIP, CEFIP, or HDIP**
E	Evaluator certified	Yes
F	Qualified in basic weapon system	Yes
I	Instructor qualified	Yes
M	Mission qualified in weapon system	Yes
O	Crewmembers (active or inactive) in aircraft in which they are not qualified (grades Colonel and above)	No
S	Student enrolled in Undergraduate Flying Training	Yes
U	Obtaining initial qualification or requalification in the weapon system	Yes
X	Crewmembers (active or inactive) in aircraft in which they are not qualified (grades Lt Colonel and below)	No
Z	Non-Interference Commander	No (Note 5)
Aircrew Position Identifier (Second Character)		
A	Astronaut (rated officer performing “non-crew” space station duty) or Other Aircrew Member (nonrated)	Yes
B	Boom Operator	Yes
C	Copilot	Yes
D	Parachutist	Yes
E	Electronic Warfare Officer or Defensive System Operator	Yes
F	Flight Engineer	Yes
G	Aerial Gunner	Yes
H	Flight Nurse	Yes
J	Pararescue Member	Yes
K	Airborne Communications System	Yes
L	Loadmaster or Dropmaster	Yes
M	Airborne Mission Systems/Specialist	Yes
N	Navigator/Combat Systems Officer	Yes

O	Air Battle Manager	Yes
P	Pilot	Yes
Q	Airborne Linguist/Airborne ISR Operator	Yes
R	Navigator-Bombardier or Offensive Systems Operator	Yes
S	Flight Surgeon	Yes
T	Flight Attendant	Yes
U	Remotely Piloted Aircraft Duties	Yes (Note 8)
V	Airborne Battle Management Systems (Sensor Operator)	Yes
W	Weapon System Officer	Yes
X	Non-interference	No (Note 5)
Y	Rated Flying Duties	Yes (Note 7)
Z	Operational Support, Airborne Battle Staff, Airborne Emergency Actions Officer, Mission Crew Commander authorized non-crew in-flight duty	Yes (Note 6)

To meet OFDA, ACIP, CEFIP, or HDIP requirements, aircrew members must comply with the following:

1. Log their flight time using both an aircrew certification code and position identifier valid to credit time (a “Yes” in column 3).
2. Log primary, secondary or instructor flight time. Evaluator flight time is also creditable when the evaluator is current in the aircraft. Otherwise the evaluator should use the aircrew certification code O or X.
3. Be attaining or maintaining qualification in the aircraft.
4. Operational support fliers must log primary time to meet the requirement for HDIP. When not performing primary duties, they will log other time. Operational Support medical technicians on AOs will only log primary time when performing in-flight medical assistance to actual patients. Only other time is authorized for periods of the mission when medical assistance is not being provided. ***EXCEPTION:*** AFSPC and AETC medics will log primary time for that portion of the mission when they perform required temporary CEA duties on aircraft equipment (hoists and litters).
5. Non-interference fliers (other than flying unit commanders) must receive HQ USAF/A3O-AT approval to log flying time on AFTO Form 781 and enter data into ARMS. See paragraphs **3.2.1.5.2** and **3.2.1.5.3**.
6. Rated officers and CEAs will log second character crew position Z when tasked to perform in-flight non-crew duties (e.g. safety observer). Include a remark on the back side of the AFTO Form 781 to explain the duty performed.
7. Must receive HQ USAF/A3O-AT approval to log primary time on AFTO Form 781.

8. Fifth character will be V for RPA Pilots and S for RPA Sensor Operators.

Note: MAJCOMs may specify additional characters and may provide supplemental guidance.

Attachment 3

ARMS AIRCREW/MISSION FLIGHT DATA EXTRACT

A3.1. Purpose. The AF Form 3520 is the source document for recording and reporting flight training and space shuttle/space station information for each individual authorized to take part in missions. This form is primarily used for aircrew members attending qualification school or aircrew logging space time. Aircrew who fly operational missions off-station will use/make an exact copy of the original AFTO Form 781, certify this as a true extract, and turn in the form/copy to their HARM or SARM office for updating in ARMS. This is an official record to validate flight pay eligibility for rated, CEA, and other non-rated officer and enlisted members required to fly while TDY. This form will not be used for flights involving combat/combat support operations. The original AF Form 3520,*ARMS Aircrew/Mission Flight Data Extract*, must be maintained in the HARM office that services the unit to which the member is assigned. This form is available for downloading on the Air Force e-Publishing website at **www.e-publishing.af.mil**.

A3.2. Scope. The instructions listed on the reverse side of the AF Form 3520 apply to all rated, CEA, and other non-rated officer and enlisted members authorized to log flight time while attending training to attain qualification in an aircraft or training device and to log authorized flights in non-USAF aircraft (includes space shuttle and space station) for the purpose of maintaining an official Air Force Individual Flight Record. Source documents used to transfer flight data from non-USAF aircraft are maintained as source documents IAW AFMAN 37-139. Aircrew who fly operational missions on non-USAF aircraft will use an AFTO Form 781 to document and record flight activities.

A3.3. Responsibilities. SARM/HARM office personnel are responsible for distributing and collecting these forms. Completing the AF Form 3520 is a responsibility of the aircrew member.

Attachment 4

INSTRUCTIONS FOR USING AF FORM 4327, ARMS FIGHTER FLIGHT AUTHORIZATION, AND AF FORM 4327A, CREW FLIGHT AUTHORIZATION (FA)

A4.1. Purpose. Unit commanders will use the AF Forms 4327 and 4327a to authorize the use of USAF aircraft to perform a specific mission(s), and to authorize aircrew members required to perform in-flight duties. Use the AF Form 4327 to authorize flights of utility, fighter, and trainer aircraft for missions that originate and end at the same location. Use the AF Form 4327a to authorize all other aircraft missions and for fighters/trainers (if desired). These are critical documents used during mission review to validate duties performed/logged on the AFTO Form 781, and for reimbursement of temporary duty expenses. Forms are available for downloading on the Air Force e-Publishing website at **www.e-publishing.af.mil**.

A4.1.1. Additional members authorized to fly, who are not required to perform aircrew duties (except for noninterference fliers and MEP when specifically authorized [see paragraph **A4.1.2**]) must be listed on a passenger manifest.

A4.1.2. The FA accounts for aircrew personnel required/authorized to perform in-flight aircrew duties and the passenger manifest lists all additional members approved to fly on the aircraft, but not performing specific aircrew duties on that mission. MEP and non-interference fliers not on AOs may be listed on the FA, in the Remarks section; if not listed on the FA, these individuals will be placed on the passenger manifest. The FA and passenger manifest combined account for all personnel on the aircraft.

A4.1.3. Units may use computer-generated programs to produce AF Forms 4327/4327a in lieu of the actual form program. If used, computer-generated forms must duplicate AF forms located at the AFDPO e-publishing web site.

A4.2. Scope. These instructions apply to all flying unit commanders with operational control of USAF aircraft who direct the use of aircraft and aircrews in support of command operations; and AE, pararescue unit and ANG Senior Scout unit commanders who publish AE/PJ/Senior Scout flight authorizations for aircrew members assigned to their units who are required to perform aircrew duties on the mission.

A4.3. Responsibilities. AF Forms 4327 and 4327a are established by this instruction. Aviation Resource Management personnel are responsible for publication of these forms and performing Go/No-Go validation (review of ARMS products and member's AOs) during pre-mission review.

A4.3.1. When additional aircrew members are added after completion of the FA, the authenticating official, pilot in command, or flight lead must confirm Go/No-Go requirements are accomplished by validating ARMS training products and AOs prior to flight.

A4.3.2. The completed FA and the AFTO Form 781 will be used during post mission review to ensure proper documentation and accounting for all aircrew members authorized to perform duties. The pilot in command will document deviations between scheduled duties on the FA (Duty Position) and actual duties performed in the remarks of the AFTO Form 781.

A4.3.3. The completed FA is normally filed with other mission paperwork. The Air Force *Records Disposition Schedule (RDS)* lists the minimum disposition requirements of this form. MAJCOM supplements may require longer retention times for the form.

Table A4.1. AF Form 4327 Entries.

Block	**Enter**
Home Station	List home station of aircraft. (Example - Langley AFB, VA)
Order No	FA number assigned sequentially by Fiscal Year. (Example - 10-0100)
Unit	Unit which aircraft are assigned or chopped.
Depart on or about	Scheduled departure date Use numerical digits for year, month, and day. (Example: 20100505)
Issue Date	Date FA is authenticated.
Signature	Signature of Authenticating Official. Must be designated (in writing) by the OG/ CC or equivalent. Once authenticated any changes must be initialed on the original FA by a designated official.
Line #	Aircraft line number from the daily flying schedule.
Name	Full name of each individual authorized to perform duties.
Rank	Abbreviated rank of each individual.
Crew Position	Enter individual's current aircraft qualification from AF Form 8/8a. For individuals flying as Evaluators, enter qualification from the unit certification document.
Duty Position	Enter duty position code for scheduled duties IAW **Table A2.3**.
Security Clearance	Enter the member's security clearance.
MDS	Aircraft MDS. (Example - F015E)
Msn Sym	Mission Symbol IAW **Table A2.2** of this instruction and additional MAJCOM guidance as necessary.
Call Sign	Enter Flight/Aircraft call sign.
Tail Nbr	Aircraft serial number. (Example - 98-0829)
Remarks Code	MAJCOM/Units approved remarks code as required.
ETD/ETA	Estimated Time of Departure/Arrival.
ATD/ATA	Actual Time of Departure/Arrival. Entered upon completion of mission.
Sortie Duration	Actual sortie duration may be entered upon completion of mission.
Signature of the Pilot in Command	PIC sign.

Initials for Changes	Initials of authorized personnel for changes to aircrew names and/or duty positions made after authentication.
Note: Only members on AOs, required to perform in-flight duties on a specific mission, are authorized to be on flight authorizations IAW paragraphs **1.6.2.1** and **1.8.1** of this instruction. MEP may be listed in the Remarks section.	

Table A4.2. AF Form 4327a Entries.

Item	Enter
1	Use numerical digits for year, month, and day of date FA is prepared. (Example – 20100506)
2	Mission number. Refer to MAJCOM supplement for specific criteria
3	List place of departure. For example, Minot AFB, ND
4	Enter final destination location. For example, Charleston AFB, SC. List enroute stops in the Remarks section and include explanations as necessary.
5	Mission Symbol IAW **Table A2.2** of this instruction and additional MAJCOM guidance as necessary.
6	Scheduled departure date and time. (Example - 20100507 1930)
7	Scheduled return date and time. (Example - 20100508 0230)
8	Aircraft MDS (Example - C017A)
9	Aircraft serial number. (Example- 01-0381)
10	Enter Aircraft call sign.
11	Crew Information
	A. Full name of each individual authorized to perform duties
	B. Abbreviated rank of each individual
	C. SSN: Full SSN; last four, or may be empty (MAJCOMs define requirement)
	D. Security clearance.
	E. Enter individual's current aircraft qualification from AF Form 8/8a. For individuals flying as Evaluators, enter qualification from the unit certification document.
	F. Enter duty position code for scheduled duties IAW **Table A2.3.**
	G. Remarks Code (as applicable). MAJCOMS and units may define codes.
	H. Four-digit unit number to which the crewmember is assigned/attached for flying/jumping. Use leading zeros when the unit number has fewer than four digits.
	I. Enter each individual's crew number (if used).
	J. Initials of authorized personnel for changes made after authentication.
12	Units may enter remarks and remarks code legend as required. MAJCOMs may provide additional guidance. List MEP in the Remarks section.

13	Date FA is authenticated.
14	FA number assigned sequentially by Fiscal Year. (Example - 10-0101)
15	Distribution per MAJCOM/Unit guidance
16	Go/No-Go verification will be completed by a qualified 1C0X2 or designated representative and reviewed by the pilot in command (PIC). AE/PJ/Senior Scout flight authorizations do not require AC initial, when published by an AE/PJ/Senior Scout unit. When additional crewmembers are added after the FA is authenticated, the pilot in command will certify that Go/No-Go verification was completed.
17	As a minimum enter unit designation and complete address and DSN phone /fax number. MAJCOMs may provide additional requirements.
18	Complete signature element of authenticating official. Must be designated (in writing) by the OG/CC or equivalent. Once authenticated any changes must be initialed on the original FA by a designated official.
19	Fund cite information when FA will be used for reimbursement of temporary duty expenses.
20	Continuation of Item 11, complete as necessary.
21	Continuation of Item 12, complete as necessary.

NOTES:

1. Only members on AOs, required to perform in-flight duties on that mission are authorized to be on flight authorizations IAW paragraphs **1.6.2.1.** and **1.8.1.**

2. Since the AE/PJ/Senior Scout flight authorization is not a stand alone form, the pilot in command must validate that specific mission elements (blocks 1 thru 10) on AE/PJ/Senior Scout flight authorizations match the aircraft's flight authorization for that specific mission.

Table A4.3. (Added) Flight Authorization Duty Remark Codes

Codes to be used with the AF Form 4327	
Code	Description
++	Mission or Flight Lead
+	Deputy Mission or Flight Lead
PP	Pilot/Physician – member authorized to log FS time when not actively performing pilot duties

Table A4.4. (Added) Flight Authorization Duty Remark Codes

12. REMARKS	MANDATORY REMARKS.
A	In Command (CAF units may utilize the following codes during cross-country sorties [++ Mission or Flight Lead; + Deputy Mission or Flight Lead])
B	Non-Current (i.e., Overdue Currencies) (All aircrew who are non-current for a flight event must be coded non-current.
C	Acting In Next Higher Qualification For Evaluation Purposes
D	Reserved for future use
G	Female Crew Member
H	Instructor or Evaluator Candidate
I	Non-Mission Ready (Not to be utilized for aircrew who are simply non-current. Individuals who are considered NMR for a particular mission due to being non-current will be identified via the B [Non-Current] code).
J	Enplane/Deplane
N	Medical Crew Director
K, L, M, P-ZZ	Plus All Numbers And Symbols-Unit Developed
PP	Pilot/Physician – member authorized to log FS Time when not actively performing pilot duties
15. DISTRIBUTION:	1 - File copy (original with full SSNs). 2 - As required—each crew member (only last four digits of SSN). 3 - As required—each mission kit (only last four digits of SSN). 4 - The aircraft commander may be provided a copy, with full SSNs listed, and is responsible for compliance with the Privacy Act of 1974.
16. GO/NO-GO VERIFICATION**:**	As a minimum will include confirmation of member's aeronautical order status, flight physical, physiological, flying time maximums and the individual's qualification will remain valid through future dates. AF Portal ARMS products are acceptable for Go/No-Go validation. AE units – Ensure a qualified 1C0X2 initials as well as the MCD. For units without 1C0X2 support, the HARM will establish procedures to provide the unit with the ability to verify member's status (via ad hoc queries).

Notes:
1. (Added) Units may define additional duty remark codes in Wing supplement.
2. (Added) For missions authorized two complete crews, an aircraft commander will be in command of each crew. Designate one as the operating crew and the other as deadhead crew for specific route segments or to the mission turn around point.

Attachment 5 (Added-PACAF)

PACAF ORIENTATION FLIGHT GUIDELINES

A5.1. (Added-PACAF) General. Orientation flights are regulated by DoD 4515.13-R, *Air Transportation Eligibility*. These flights are an exceptional use of USAF aircraft, flown only when the benefits to the USAF are clearly established. These limited resources may be used to familiarize selected passengers with aircraft capability and employment concepts, and to increase public understanding and appreciation of USAF roles and missions. Direct all inquiries concerning the PACAF Orientation Flight Program to HQ PACAF/A3TC, 25 E. ST SUITEG-317, JBPH-H, HI 96853-5426, or telephone DSN 449-8990.

A5.2. (Added-PACAF) Orientation Flights. Orientation flights are a broad category of four separate types of "exceptional use" flights: Incentive, Distinguished Visitor (DV), Familiarization (FAM), and Spouse Orientation. Table 1.1. of the basic instruction, as supplement by PACAF, lists orientation flight eligibility and approval authorities. The approval authorities indicated have been delegated as listed. If a particular category is not listed, then the approval authority has not been delegated. Approvals for incentive, DV and spouse orientation flights are for a one-time flight only. Familiarization flight approvals may include periodic flights (not to exceed 1 per calendar quarter), but local commanders will ensure specific learning objectives for each mission are established. Develop local procedures to identify and outline those objectives, and ensure they are met after each flight.

A5.2.1. **(Added-PACAF)** Officers Awaiting PCS Training (APT). APT participants are Air Force active duty officers awaiting Specialized Undergraduate Pilot Training (SUPT). These personnel are specifically authorized to receive familiarization flights based on the level of preparatory training accomplished prior to such flights. They are authorized an unlimited number of familiarization flights, but only if such flights do not adversely effect unit "C" rating or create a backlog for other orientation flight programs. Although not specifically authorized to fly as MEPs, for administrative purposes, APT participants will be included on the Flight Authorization as "MEP." These individuals will not be included on the AFTO Form 781, and will not log flight time.

A5.3. (Added-PACAF) Request Procedures. PACAF/A3TC is the OPR for processing and directing all orientation flight requests whose approval authority is above NAF level. Requests requiring approval above NAF level, and all requests requiring SAF/IA and/or foreign disclosure coordination, must be staffed through the NAF/CC to HQ PACAF/A3TC. Requests requiring PACAF/A3/5 approval must be received at least two weeks before the date of the proposed flight. If PACAF/CC approval is required, request must be received at least three weeks prior to the flight. If HHQ approval authority is required, request must be received at least 30 days prior to flight. Requests not received within the specified time period will not be processed.

A5.3.1. **(Added-PACAF)** Submit requests either via hard copy, or by electronic means, with an accompanying Staff Summary Sheet (SSS) in Electronic Staff Package (ESP) format. Orientation flight requests within PACAF will be submitted to PACAF/A3TC for staffing though HQ PACAF. The following minimum information must be on all requests, regardless of the level of approval required:

A5.3.1.1. **(Added-PACAF)** Name, grade, nationality, and position of the orientation candidates. Flights may be approved for well-defined groups if individual names are not known.

A5.3.1.2. **(Added-PACAF)** Aircraft Type.

A5.3.1.3. **(Added-PACAF)** Unit, location, and type of orientation flight requested (as defined in Table 1.1 of the basic AFI, and paragraph A5.2 of this guidance).

A5.3.1.4. **(Added-PACAF)** Requested date or time period window for the flight. Allow sufficient time for flexibility in scheduling due to weather, distinguished visitor schedules, and aircraft availability. The time period window will not exceed six months for flights.

A5.3.1.5. **(Added-PACAF)** Specific statement of benefit to the USAF or DoD.

A5.3.1.6. **(Added-PACAF)** Other relevant comments, such as background of the orientation candidate (especially flying background), media coverage, unusual details of the planned mission, etc.

A5.3.1.7. **(Added-PACAF)** Statement of specific learning objectives for any recurring familiarization flights (Reference A5.2.).

A5.3.2. **(Added-PACAF)** Unless otherwise directed in this guidance, approvals for all categories of orientation flights are one-time only for a specific individual. If a cancelled flight (WX, MX, etc.) must be rescheduled for the same individual, re-approval within six months of the original signed approval is not required. **Note**: Requests approved below MAJCOM level will info the PACAF A3/5, CV, or CC as appropriate.

A5.4. (Added-PACAF) Operating Procedures-All Categories. The following applies to all categories of orientation flights:

A5.4.1. **(Added-PACAF)** Do not publicly offer flights or imply approval until the appropriate authority has formally approved the request. Orientation/Familiarization flights constitute official military duties for Active Duty, Guard and Reserve members. Due to line-of-duty considerations, do not allow any military individual to participate in orientation/familiarization flights while on leave, or permissive TDY.

A5.4.2. **(Added-PACAF)** Provide orientation flights within approved flying hour program limitations. Whenever possible, include flights on regularly scheduled missions, however, orientation flights must not interfere with those missions. Fighter orientation flights should provide the best training opportunity possible while still keeping the intent of the orientation ride in mind. Under no circumstances will incentive orientation flight candidates be allowed on fighter sorties consisting of air combat training ((D)BFM, (D)ACM, (D)ACT), or air to ground training (BSA/SAT)) unless orientation candidates accomplish the appropriate ground training indicated in paragraph A5.4.7. Refer to the appropriate AFI 11-2MDS publication for specific definitions and restrictions covering air combat or surface attack missions.

A5.4.3. **(Added-PACAF)** For flying in ejection seat aircraft, orientation candidates without a current AF Form 1042 (or national equivalent), must receive an AF Form 1042 from a flight surgeon no earlier than fourteen calendar days before the flight. Minor technically disqualifying defects may be subsequently waived by telephone coordination with HQ

PACAF Flight Medicine Branch (HQ PACAF/SGP). For non-ejection seat aircraft the individual will complete a locally generated health statement IAW AFI 48-123, *Medical Examinations and Standards*, paragraph 6.48.8. If civilian or they answer yes to any questions on the health statement, the health statement will be sent to the Flight Surgeons Office for review. See Attachment 12, from this supplement for a sample health statement. Individuals having successfully completed physiological training will be authorized to engage in familiarization/orientation flights above FL 180 in fighter aircraft.

A5.4.4. **(Added-PACAF)** Brief all orientation flight passengers IAW the minimum Orientation Flight Passenger Briefing Guide. On multi-crew aircraft, the PIC may designate another qualified crew member to brief specific items, when the passenger will be under the supervision of that crew member (e.g., Loadmasters may brief emergency equipment and locations in the cargo compartment). All items will be briefed at the aircraft by the PIC or designated crew member. Where appropriate, brief these items after the passenger is strapped in.

A5.4.5. **(Added-PACAF)** Ensure the passenger is properly strapped in and the oxygen system is properly configured and correctly connected. On multi-crew aircraft, the PIC may designate another qualified crew member to ensure the passenger is properly strapped in and the oxygen system is properly configured and connected anytime the passenger is connected to an oxygen system.

A5.4.6. **(Added-PACAF)** If the PIC believes a passenger does not fully understand the emergency procedures, the passenger will not be allowed to fly.

A5.4.7. **(Added-PACAF)** Ensure orientation candidates receive appropriate Aircrew Flight Equipment, and abbreviated survival training, as specified in AFI 11-301 PACAF SUP 1. Required Aircrew Flight Equipment training will be accomplished in certified training devices to the maximum extent possible. When a requirement for water survival training exists, “wet” immersion training will be provided if at all possible.

A5.4.8. **(Added-PACAF)** In fighter aircraft, for a flight above FL 180, orientation candidates must have current physiological training according to AFI 11-403, *Aerospace Physiological Training Program*, or their national equivalent. (Not applicable for passenger carrying, airlift, or air refueling aircraft.)

A5.4.9. **(Added-PACAF)** Prior to orientation flight, brief all orientation candidates on appropriate procedures, or have them attend the appropriate training. Individuals with current rated experience must provide current documentation of USAF, Sister Service, DoD, or national equivalent training, or re-accomplish these requirements.

A5.4.10. **(Added-PACAF)** List all orientation candidates on DD Form 2131, *Passenger Manifest*. Orientation candidates travel in passenger status, but will report through the command and control center to the aircraft commander. This will expose the individual to pre- and post-flight procedures, helping them understand these critical processes. Do not place non-aircrew members on the flight authorization. **Exception:** Approved MEPs (in accordance with A6.3.3. of this guidance) and APT candidates. Include anti-hijacking protective measures according to AFI 13-207, *Preventing and Resisting/Aircraft Piracy (Hijacking).*

A5.4.11. **(Added-PACAF)** The aircrew conducting the orientation flight must be highly qualified. At no time will an individual who is not qualified in the specific aircraft being flown occupy any pilot's seat (with a set of controls) with passengers on board. If the orientation candidate is a Brigadier General (equivalent) or above, the aircraft commander must be an IP.

A5.4.12. **(Added-PACAF)** In two-place aircraft, orientation candidates may occupy the right/rear seat as appropriate but will not be given control of an orientation aircraft unless the pilot has access to the controls and then only during non-critical phases of flight as defined in the applicable AFI 11-2MDS training publication. With an IP on board, rated general/flag officer pilots may fly the entire sortie in the front/left seat provided all of the following are accomplished: approved Senior Officer Course (if one exists), Bold Face/Critical Action Procedures (CAP) test (if applicable), appropriate normal/emergency landing procedures training in a simulator (if available).

A5.4.13. **(Added-PACAF)** Critical Phases of Flight. In two place aircraft, no unqualified individual participating in an orientation flight will occupy a seat with controls.

A5.4.13.1. **(Added-PACAF)** Non-Critical Phases of Flight. In two place aircraft, unqualified individuals participating in orientation flights may only occupy a seat with a set of controls once the aircraft is at altitude, and only with a highly experienced instructor pilot in the other seat. Refer to applicable AFI 11-2MDS training publication for exact definitions. IAW AFI 11-401, paragraph 1.9.4.7.1.4.4., under no circumstances will a spouse be given control of the aircraft.

A5.4.14. **(Added-PACAF)** The mission and briefing will not exceed the clearance level of the individual receiving the orientation flight. Ensure foreign disclosure requirements concerning visit authorizations and disclosure of USAF information are satisfied for foreign national orientation flights IAW AFI 16-201, *Air Force Foreign Disclosure and Technology Transfer Program.* Contact HQ PACAF/A2XI at DSN 449-4149 for any questions concerning foreign disclosure.

A5.4.15. **(Added-PACAF)** Additional Operating Procedures – Civilians and Non-rated Individuals: The following additional restrictions apply to all civilians and non-rated individuals:

A5.4.15.1. **(Added-PACAF)** Plan and execute mission profiles in a low risk environment with the exception of takeoff and landing. The enroute portion of the flight will not be flown below 1,000 feet above ground level (AGL) (500 ft AGL for C-130s). On Incentive flights, mechanically safe guns and download all film and external ordnance.

A5.4.15.2. **(Added-PACAF)** Incentive flights in fighter aircraft will not involve air combat training ((D)BFM, (D)ACM, (D)ACT), or air to ground training (BSA/SAT)). Refer to the appropriate AFI 11-2MDS publication for specific definitions covering air combat or surface attack missions.

A5.4.15.3. **(Added-PACAF)** Conduct Incentive flights to avoid abrupt, unexpected maneuvers and high G-loading.

A5.4.15.4. **(Added-PACAF)** Squadron Top Three must ensure pilots flying incentive flights receive adequate briefings to emphasize that the sortie objective is to reward and/or provide an incentive. Conduct missions so as not to overwhelm the observer and thus render the effort useless.

A5.4.15.5. **(Added-PACAF)** Thoroughly brief all orientation candidates on all aspects of the flight to alleviate apprehension. Provide in-flight advisories to the orientation candidate to achieve the same objective.

A5.4.15.6. **(Added-PACAF)** Civilian passengers aboard Air Force aircraft are prohibited from "Flying" or manipulating the controls of the aircraft to include on-board systems such as air refueling booms.

A5.4.15.7. **(Added-PACAF)** Following each flight, the SARM will return a copy of the completed checklist to their respective current operations section for accounting purposes. Current operations will maintain a log along with all completed flight checklist, AF Form 1042, AF Form 702 (if applicable), and AF Form 1522 (documenting egress training completed for passengers) for six months after flight completion.

A5.4.16. **(Added-PACAF)** Spouse Orientation Flights will not be conducted in fighter, bomber, or two-seat trainer aircraft, however, Spouse Taxi Rides are authorized in fighter aircraft as an alternative. Limited to spouses of the following USAF military personnel: aircrew members, flight authorized crew chiefs, flight authorized mission-support personnel, and critical specialties in direct support of flying operations. The OG/CC determines personnel considered critical specialties and will not expand the program to an all-skills program for all members.

A5.4.16.1. **(Added-PACAF)** Spouse Orientation Flights in non-fighter aircraft may be accomplished IAW the provisions of AFI 11-401, paragraph 1.9.4.7.1.4. and Table 1.1. Approval to accomplish Spouse Orientation Flights has been delegated at the WG/CC level by PACAF/A3/5 directive, and will not be delegated any lower.

A5.5. (Added-PACAF) Spouse Taxi-Ride Program.

A5.5.1. **(Added-PACAF)** Aircraft (including fighter aircraft) not appropriate for spouse orientation flights may be used in a spouse taxi-ride program. Limited to spouses of the following USAF military personnel: aircrew members, flight authorized crew chiefs, flight authorized mission-support personnel, and critical specialties in direct support of flying operations. The OG/CC determines personnel considered critical specialties and will not expand the program to an all-skills program for all members. Spouses of USAF military personnel in non-PACAF units collocated with PACAF units are eligible to participate in the program.

A5.5.2. **(Added-PACAF)** Requirements:

A5.5.2.1. **(Added-PACAF)** Candidates will complete appropriate Aircrew Flight Equipment training before the taxi ride.

A5.5.2.2. **(Added-PACAF)** Outfit participants with flight dress uniforms, gloves, jacket (if required), helmet, oxygen mask, or headset (as appropriate). Wear shoes adequate to provide necessary support for possible emergency ground egress.

A5.5.2.3. **(Added-PACAF)** Thoroughly brief participants and ensure physical capability for possible emergency ground egress. Brief participants on handles and switches they must not move, i.e., ejection handles, etc.

A5.5.2.4. **(Added-PACAF)** Ejection seat pins will not be removed under any circumstances.

A5.5.2.5. **(Added-PACAF)** Profile is a "takeoff roll" to a max speed of 100 KIAS, then select idle and use the remainder of the runway to slow back to taxi speed. Complete appropriate hot brakes/wheels inspections (as required) between taxi trips.

A5.5.3. **(Added-PACAF)** ORM considerations are as followed:

A5.5.3.1. **(Added-PACAF)** Use full runway length (e.g., 10,000', which means the jet will have about 8,500' to slow from 100 KIAS back to taxi speed).

A5.5.3.2. **(Added-PACAF)** Have only internal fuel in the aircraft to lessen gross weight.

A5.5.3.3. **(Added-PACAF)** Plan should call for 1+15 of turn time for each jet between taxi evolutions to allow brakes to cool.

A5.5.3.4. **(Added-PACAF)** No classified information will be released.

Attachment 6 (Added-PACAF)

MISSION ESSENTIAL PERSONNEL (MEP)

A6.1. (Added-PACAF) Definition. Mission Essential Personnel (MEP): are individuals who are required for the execution of the aircraft or unit mission, to include follow-on missions. MEP includes additional aircrew members and other personnel not authorized AOs who are tasked to perform ground support duties at en route locations or destination points that are directly related and essential to accomplishment of the aircraft or unit mission, e.g., a specialist or technician required to provide aircraft support or a security team required to guard the aircraft. MEP may include military staff personnel when required to accompany a senior officer and U.S. Government employees when those individuals are required for the mission. Civilian contractors will only be authorized MEP status if the Air Force is required to provide airlift as stipulated in individual employment or company contracts. Foreign nationals (military or civilian) are not authorized MEP status unless they are approved and participating in the military exchange programs described in AFI 16-107, *Military Personnel Exchange Program* and assigned to USAF units.

A6.2. (PACAF) Responsibility. HQ PACAF/A3T is responsible for oversight of the MEP program.

A6.2.1. **(Added-PACAF)** MEP, to include additional crewmembers who fly in MEP status, are passengers and may only fly in aircraft capable of carrying passengers in accordance with the provisions of the basic instruction, and DoD 4515.13R, *Air Transportation Eligibility*, MEP status does not require physical or physiological training. They are not authorized to log time in the aircraft, nor are they entitled to flying incentive pay. MEP travel in passenger status, are manifested using a DD Form 2131, *Passenger Manifest*, but will report through the command and control center to the aircraft commander. Include anti-hijacking protective measures according to AFI 13-207. Limit the number of MEPs to the minimum necessary to complete the unit's mission. MEPs are authorized flight deck seating with aircraft commander approval. Do not use MEP status as a substitute for point-to-point travel requirements (see DoD 4515.13R, *Air Transportation Eligibility*, for Space-A duty passenger requirements). Commanders will ensure that MEP status is not used for travel at a higher priority than, or in lieu of regular passenger travel, for avoidance of travel expenses, or for travel while on leave. Do not bump MEPs en route without PACAF/AMOCC, PACAF/TACC, or Director Mobility Forces (DIRMOBFOR) approval. Do not use MEP status to provide blanket approval for recurring familiarization flights. Strictly control and approve MEP travel status for those with a bona fide mission essential purpose.

A6.2.2. **(Added-PACAF)** Further guidance or restrictions concerning specific conditions of MEP presence on-board the aircraft will be the responsibility of individual AFI 11-2MDS series publications, as supplemented by the MAJCOM.

A6.3. (Added-PACAF) Approval Authority.

A6.3.1. **(Added-PACAF)** The OG/CC (or equivalent) with operational control of the aircraft being flown approves MEP status on a case-by-case basis (each flight or mission). This includes any HQ PACAF or NAF Staff personnel or sister-service members. Blanket approval is not authorized. HQ PACAF/A3T approves civilian members of other U.S.

federal agencies for MEP status on passenger capable aircraft when supporting PACAF missions (e.g., simulated survivors for CSAR exercises with en route ground-based duties).

A6.3.1.1. **(Added-PACAF)** Air Mobility Division (AMD) Contractors are authorized to occasionally fly on PACAF mobility aircraft to obtain familiarity with the flying environment as Mission Essential Personnel (MEP). AMD Contractors will be designated as MEP on an approval memorandum prior to each mission. PACAF/A3T is the approval authority. AMD Contractors will present the approved memo to the unit flying the mission to have their names added to the flight authorization. Flying time and training is not authorized to be logged or updated in ARMS.

A6.3.2. **(Added-PACAF)** Procedures. Submit requests for MEP status either via hard copy, or by electronic means to see attachment 8 and 9. Requests requiring MAJCOM approval must be accompanied by a Staff Summary Sheet (SSS) in the Electronic Staff Package (ESP) format. Forward requests to the approving agency at least ten days prior to the expected date of flight(s). Include name, rank, organization, reason for travel, proposed itinerary, and dates. Ensure routing includes appropriate HQ PACAF agency staffing prior to arriving at PACAF/A3T. Failure to include appropriate staffing will result in a delay in processing and/or possible failure to approve request in a timely manner.

A6.3.3. **(Added-PACAF)** Orders. Cite MEP approval in TDY travel orders, or approval authority letter. The following is an example statement: "MEP status is authorized by (appropriate OG/CC, or PACAF/A3T) on (aircraft number or mission number, exercise or contingency name) for or between (duration, i.e., 22-27 June 2009)." End the statement with name and phone number of individual approving MEP status. MEP authority may also be cited in a letter or message using this statement. (**Note**: Approved MEPs may be placed on the Flight Authorization in the "Remarks" section only for the purpose of maintaining billeting and transportation integrity with the aircrew only. They will not be annotated on the AFTO Form 781).

A6.3.4. **(Added-PACAF)** Coordination of MEP travel. Individuals will coordinate their travel with the appropriate current operations function prior to travel. It is imperative that mission operators and air terminal operations centers are aware of MEP requirements when scheduling missions and crews. Individuals joining missions en route will present their travel orders to the appropriate PACAF command and control agency at least three hours prior to intended travel. Medical MEPs anticipating travel on aeromedical evacuation missions require prior approval from the Aeromedical Evacuation Control Center (AECC).

A6.3.5. **(Added-PACAF)** Aircrew Procedures. With the concurrence of the aircraft commander and seats permitting, MEP may be seated on the flight deck/crew compartment during takeoff and landing, to include touch-and-go landings. Simulated emergencies, to include no-flap landings, with MEPs on-board are prohibited. Crews must be prepared to include MEPs on a DD Form 2131 and provide force protection measures (anti-hijacking) screening when passenger service is not available.

Attachment 7 (Added-PACAF)

SAMPLE LETTER, ATTACHMENT FOR FLYING

A7.1. (Added-PACAF) Attachment for Flying. Individuals requesting flying attachment to a unit other than their assigned unit, will submit a formal request using the following format templates.

Figure A7.1. Sample Letter, Attachment for Flying

MEMORANDUM FOR XX Unit of Assignment/CC (date)
XX Requested Unit of Attachment/CC
XX Requested Unit of Attachment/OG
HQ PACAF/A3T

FROM: (Individual's Office Symbol)

SUBJECT: Attachment for Flying

1. IAW the provisions of AFI 11-401, I request attachment for flying to the unit listed below. In support of this request, the following information is provided:

a. Name (Last, First, MI): Schloemer, Misty L.
b. Rank: Capt
c. SSAN: 125-00-9999
d. ASD: 22 Nov 06
e. ASC: 1A
f. Aeronautical Rating: Pilot
g. Expected Duration of Assignment: 3 years
h. DOS/ETS: 31 Jan 2011
i. Assigned Duty Position Title: 11 AF/A3T
j. Assigned Duty Position Number: 037895
k. API Code: 8
l. Aircraft Last Qualified in: F-16C
m. Date Last Flown: 3 Jul 07
n. Requested Unit of Attachment: 00 FS
o. Unit POC: Lt Col Richard N. Chavez
p. Phone: 317-333-4545

2. The indicated unit has agreed to support my flying requirements and the POC for this decision is listed above. My individual flight record folder will be maintained by the HARM at the base of attachment. The requested unit of attachment will be responsible for tracking my aircrew training data, and flying hours, for the purposes of report generation. Once approved, the original request will be maintained by HQ PACAF/A3TC, however, copies will be provided to the appropriate Wing HARM, and the Unit of Attachment.

(Signature block of individual)

A7.2 (Added) Attachment for Flying (page 2).

Attachment for Flying for Individual's grade and name Date:_____

1st Ind, ___CC (Requested unit of attachment)
Recommend Approval/Disapproval

JESSICA B. COLLINS, Lt Col, USAF
Commander, _____ Squadron

2nd Ind, __ OG (Attached Group)
Recommend Approval/Disapproval

AMY L. ROHDE, Col, USAF
Commander, ___ Operations Group

3rd Ind, HQ MAJCOM/A3T
Approve/Disapprove

TORI LOCKHART, Col, USAF
Chief, Operational Support Division
Directorate of Ops, Plans, & Policy

Attachment 8 (Added-PACAF)

SAMPLE LETTER, APPLICATION (NON-AIRCREW) FOR MISSION ESSENTIAL PERSONNEL (MEP) STATUS

A8.1. (Added-PACAF) Application for Mission Essential Personnel (MEP) status for non-aircrew members. Figure A8.1 Sample Letter, Application (Non-Aircrew) for Mission Essential Personnel (MEP) Status

MEMORANDUM FOR RECORD (date)

FROM: XX OG/CC

SUBJECT: Mission Essential Personnel (MEP) Approval

1. IAW the provisions of AFI 11-401, I hereby approve MEP status for TSgt Danielle Miller, SSAN 123-45-6789 on (aircraft number or mission number, exercise or contingency name) for or between (duration, i.e., 22-27 June 2011). TSgt Miller's presence on board the aircraft is required to (specific reasons for being on the aircraft).

2. With the concurrence of the aircraft commander and seats permitting, TSgt Miller may be seated on the flight deck/crew compartment during takeoff and landing, to include touch-and-go landings. Simulated emergencies, to include no-flap landings, are prohibited. The aircrew is responsible to include TSgt Miller on a DD Form 2131 and provide force protection measures (anti-hijacking) screening when passenger service is not available.

SAMANTHA D. BEARY, Col, USAF

(Signature block of OG/CC)

Attachment 9 (Added-PACAF)

SAMPLE LETTER (AIRCREW), APPLICATION FOR MISSION ESSENTIAL PERSONNEL (MEP) STATUS

A9.1. (Added-PACAF) Application for Mission Essential Personnel (MEP) status for aircrew members.

Figure A9.1. Sample Letter (Aircrew), Application for Mission Essential Personnel (MEP) Status

MEMORANDUM FOR RECORD (date)

FROM: XX UNIT/CC

SUBJECT: Mission Essential Personnel (MEP) Approval

1. IAW the provisions of AFI 11-401, I hereby approve MEP status for TSgt Sarah Hanania, SSAN 123-45-6789, a qualified C-17 Loadmaster, on (aircraft number or mission number, exercise or contingency name) for or between (duration, i.e., 22-27 June 2011). TSgt Hanania's presence on board the aircraft is required to (specific reasons for being on the aircraft or mission they are positioning/depositioning).

2. TSgt Hanania is not entitled to log flying time. The Command and Control Center will coordinate with the air terminal operations centers as early as possible to ensure that space is available. TSgt Hanania will report to the appropriate command and control facility for accountability.

NORIKO NAKAMURA, Col, USAF
Chief, Operational Support Division
Directorate of Ops, Plans, & Policy

Attachment 10 (Added-PACAF)

SAMPLE LETTER, FLYING STATUS CODE "T"/INDOCTRINATION FLYER REQUEST

A10.1. (Added-PACAF) Application for Indoctrination Flyer requests.

Figure A10.1. (Added-PACAF) Sample Letter, Flying Status Code "T"/Indoctrination Flyer Request

MEMORANDUM FOR HQ PACAF/A3/5 (date)

SUBJECT: Indoctrination Flyer Request

1. Request approval for Major Marissa R. Miller, XXX-XX-XXXX as an Indoctrination flyer effective for the period of 3 November 2011 through 27 May 2012.

2. Major Miller is an Electronic Warfare Officer, currently assigned to an inactive, API 4 position. Major Miller is the lead project officer on the ALQ-47 pod upgrade system. Allowing her to fly on all the test missions would enable her to perform operational function tests of the system. She has a current physical and altitude chamber. Member will log "XW" and other time.

CHRISTINA M. WOLFE, Colonel, USAF

(Group Commander's Signature Block)

Example 2: Commanders or branch chiefs could also identify an inactive rated/CEA position to be a continuous indoctrination position. For instance: an inactive training officer position in PACAF/A3T to maintain familiarity of the flying environment, to enhance ability to maintain knowledge to effectively write MAJCOM flying instructions.

RANDALL D. KWIATKOWSKI, Maj Gen, USAF

Director of Operations, Plans, & Policy

(Forward requests through command channels with SSS coordination to HQ PACAF/A3TC, A3T, and A3/5/).

Attachment 11 (Added-PACAF)

MISSION REQUIREMENTS LETTER

A11.1. (Added-PACAF) Mission Requirements Letter

Figure A11.1. (Added-PACAF) Mission Requirements Letter

MEMORANDUM FOR (Servicing HARM Office) (Date)

FROM: Flying Unit CC (Commander's Functional Address)

SUBJECT: Requirement to Perform In-flight Duties

1. The member(s) listed below are/were required to perform operational duties (Aeromedical Evacuation, Combat Search and Rescue, etc.) in support of patients/rescued personnel on (list aircraft type) missions. (For evaluators, observers, or AE/PJ/CRO/FSs [authorized to fly without patients/rescued airmen] not qualified in aircraft, list evaluator, observer, or AE/PJ/CRO/FS duties on [list aircraft type] missions.) The verbal orders of the commander (or designated flight authorization official), (rank and name), on (date) are confirmed; circumstances prevented written orders in advance.

Terhune, Jason E.	Major	Combat Rescue Officer
Knight, Brent S.	SMSgt	Pararescue

2. All aircrew members are assigned to valid aircrew active flying positions, are required to perform in-flight duties IAW AFI 11-401, paragraph **3.2.1.5.1.**, and have completed required qualification requirements IAW AFI 11-202, Vol 2, for the aircraft listed above. (If an evaluator, observer, AE, PJ, CRO, or FS in the aircraft is not obtaining/maintaining aircraft qualification, but is authorized to fly on the aircraft, state that members are not obtaining and maintaining aircraft qualification. Members will log "X" or "O" IAW paragraph **3.3.4.**, and Table **A2.3.**).

3. Aircrew members will list duties required/performed on the back of the AFTO Form 781 in the remarks section.

4. This letter will be maintained permanently in the member's flight record folder.

ADALY LIGHTSEY, Lt Col, USAF
Commander

Attachment 12 (Added-PACAF)

SAMPLE HEALTH STATEMENT FOR INCENTIVE/ORIENTATION FLIGHT ON NON-EJECTION SEAT AIRCRAFT

A12.1. (Added) Health Statement for Incentive/Orientation Flight on non-ejection seat aircraft.

Figure A12.1. (Added-PACAF) Sample Health Statement For Incentive/Orientation Flight On Non-Ejection Seat Aircraft

PURPOSE: This form is required per AFI 48-123, paragraph.6.48.8.2.1. to identify incentive/orientation flyers that require evaluation by a flight surgeon prior to flight
WHO MUST COMPLETE THIS FORM: All incentive/orientation flyers prior to flight on non-ejection-seat aircraft
CAUTION: DO NOT PUT SPECIFIC MEDICAL INFORMATION ON THIS FORM

NAME (RANK IF APPLICABLE): _____

TELEPHONE NUMBER WHERE YOU CAN BE CONTACTED BY THE FLIGHT SURGEONS OFFICE IF YOU ANSWER "YES" TO ANY OF THE FOLLOWING QUESTIONS
(_____) _____-- _____

PLEASE ANSWER THE FOLLOWING SIX (6) QUESTIONS:

1) DO YOU HAVE ANY MEDICAL PROBLEMS? (Circle one) YES NO

2) DO YOU TAKE ANY PRESCRIPTION MEDICATIONS? (Circle one) YES NO

3) IF YOU ARE ON ACTIVE DUTY WITH THE MILITARY, DO YOU HAVE ANY DUTY LIMITING CONDITIONS? (For example, an AF Form 469 or a "profile" or other medical restriction that keeps you from performing all duties of your rank and duty position?) Circle one) YES NO

4) IF YOU ARE NOT ON ACTIVE DUTY IN THE MILITARY, HAVE YOU EVER HAD A CHRONIC OR SIGNIFICANT MEDICAL PROBLEM? (For example, surgery on your sinuses or chest, or a seizure or heart attack?) (Circle one) YES NO

5) DO YOU NEED TO OR WOULD YOU LIKE TO SEE A FLIGHT SURGEON TO DETERMINE YOUR ABILITY TO FLY PRIOR TO YOUR INCENTIVE/ORIENTATION FLIGHT?
(Circle one) YES NO

6) WOULD YOU HAVE DIFFICULTY GETTING OUT OF AN AIRCRAFT SAFELY WITHOUT ENDANGERING LIFE OR LIMB? (Circle one) YES NO

FOR FLYING UNIT USE ONLY BELOW THIS LINE

FOR CIVILIAN INCENTIVE/ORIENTATION FLYERS:
1) Send this form to the Flight Medicine Element (FME) for an AF Form 1042
2) The FME may require an appointment with the incentive/orientation flyer by their personal health care provider and/or the FME prior to completing the AF Form 1042
3) The AF Form 1042 may be valid for NO MORE THAN fourteen (14) days from the date of issue

FOR MILITARY INCENTIVE/ORIENTATION FLYERS:
1) If all answers on this form are “NO”, no AF Form 1042 is required for this incentive/orientation flight; ensure that this form is completed WITHIN fourteen (14) days of the incentive/orientation flight
2) If any answers are answered “YES”, send this form to the FME for an AF Form 1042
3) The FME may require an appointment prior to completing the AF Form 1042
4) The AF Form 1042 may be valid for NO MORE THAN fourteen (14) days from the date of issue

Attachment 13 (Added-PACAF)

FLYING STATUS CODE "S" AND AVIATION SERVICE CODE "04" 180/365 DAY WAIVER FORMAT

A13.1. (Added-PACAF) Flying Status Code "S" and Aviation Service Code "04" 180/365 Day Waiver Format

MEMORANDUM FOR (Operations Group Commander Functional Address Symbol) Date
HQ PACAF/A3T (180 days) or HQ PACAF/A3 (365 days)
IN TURN

FROM: (Unit Commander Functional Address Symbol)
(Street Address)
(Base, State, Zip Code)

SUBJECT: Waiver Request for Non-Performance of Flying

1. Request waiver for Maj Johnny B. Goode to remain in FSC "S" (or ASC "04") beyond 180 days (or 365 days). The following is submitted IAW AFI 11-401, Table 2.6., for non-performance of flying.

a. Unit:
b. ASC:
c. ASC Effective Date:
d. Days in ASC Status:
e. API:
f. Rationale: *Explain exactly what prevented this member from flying. If the position (staff) no longer requires active flying, submit AF Form 480 requesting an API change. If the member is not flying for cause (e.g., legal proceedings, unprofessional behavior) Refer to AFI 11-402 for FEB required action.*

2. Under no circumstances will aircrew remain in FSC "S" or ASC "04" beyond 365 days without an approved HQ PACAF/A3 waiver. **Note:** *This paragraph is not required for 365 day waiver requests.*

3. My POC for this request is SMSgt Kenya Meyers, 18 OSS/OSOR, 111-2222.

(Commander's Signature)
(Unit Commander's Signature Block)

Attachment
1. Copy of suspension/FSC "S" AO
2. ARMS Individual Data Summary
3. ARMS Aviation Service Worksheet *(required for FSC "S")*

1st Ind to [Unit CC], [Date], Waiver Request for Non-Performance of Flying

MEMORANDUM FOR HQ PACAF/A3

Recommend approval/disapproval

(Operations Group Commander's Signature)
(Operations Group Commander's Signature Block)

2d Ind, MAJCOM/A3T (or MAJCOM/A3)

MEMORANDUM FOR (Unit Commander Functional Address Symbol)

Recommend approval/disapproval

(MAJCOM A3T or A3's Signature)
(MAJCOM A3T or A3's Signature Block)

cc:
HQ PACAF/A3TC
[OG/CC]

Attachment 14 (Added-35FW)

35 FW ORIENTATION FLIGHT PROGRAM

A14.1. (Added-35FW) GENERAL GUIDANCE

A14.1.1. **(Added-35FW)** This supplement defines the local implementation of AFI 11-401, *Aviation Management,* specifically the 35 FW orientation flight program.

A14.1.2. **(Added-35FW)** Familiarization Flight. FAM flights are non-dedicated sorties that do not interfere with normal training. These flights familiarize individuals with USAF, PACAF and 35 FW missions. Individuals receiving these flights have either aviation-related responsibilities with USAF aircraft, or are designated by the 35 FW/CC to observe routine training missions; thus the flight profile does not restrict mission training and may be conducted as part of CT missions. Individuals can be approved to perform these flights on a recurring basis if justified by their commander and approved by the 35 FW/CC. Table A4.1 lists the recommended recurring FAM positions and desired learning objectives for their program.

A14.2. (Added-35FW) ORIENTATION FLIGHT PROGRAM:

A14.2.1. **(Added-35FW)** Selection Authority. Group and associate unit commanders are the designated Office of Primary Responsibility (OPR) for orientation flight selections. Number of annual allocations, OPRs, and their assigned units are identified in Attachment 15, Organization/Group Incentive Flight Nomination Process. 35 FW/CC is the final approval authority for familiarization flights. Normally, these flights are one-time events.

A14.2.2. **(Added-35FW)** Selectee Cancellation/Change. Those selected for orientation flights will automatically be removed from the approved list if they cancel their scheduled flight more than once for reasons other than medical disqualification. Requests to change selectees or reprioritize them against remaining unit slots (see Attachment 15) will be accomplished semi-annually via a memorandum for record signed by the selectee's Group Commander. Electronic submissions are authorized.

A14.2.3. **(Added-35FW)** For an effective orientation flight program, responsibilities will be shared among the nominating unit (via the unit orientation flight monitor), the operational Fighter Squadrons, 35 OSS/OSOS (Wing Scheduling), wing and squadron Aircrew Flight Equipment office, the selectee and the mission pilot in command (PIC).

A14.2.3.1. **(Added-35FW)** Group and associate unit commanders will:

A14.2.3.1.1. **(Added-35FW)** Submit incentive orientation requests per Attachment 17. All authorized incentive slots plus three alternates may be submitted in accordance with Attachment 15.

A14.2.3.1.2. **(Added-35FW)** Review and reprioritize selectees against remaining group slots semi-annually and/or for deployments/TDYs. Submit TDY lists to 35 OSS/OSOS NLT 14 days prior to departure.

A14.2.3.2. **(Added-35FW)** 35 OSS/OSOS (Wing Scheduling) will:

A14.2.3.2.1. **(Added-35FW)** Manage the overall orientation flight program.

A14.2.3.2.2. **(Added-35FW)** Assign selectees to available flights in accordance with Attachment 16 and provide the updated list to each fighter squadron weekly. Every effort will be made to conduct FAM flights in the prioritized order. However, some may be conducted out of order due to scheduling availabilities and other unforeseen circumstances.

A14.2.3.2.3. **(Added-35FW)** Coordinate orientation flight scheduling with the flying squadrons. Having a predictable weekly schedule reduces man hours required to complete orientation flight checklist. **Normally, orientation flights should be scheduled Wednesday through Friday.**

A14.2.3.2.4. **(Added-35FW)** Coordinate with the 35th Aerospace Medicine Squadron, Flight Medicine Flight (35 AMDS/SGPF) and the 35 OSS Aircrew Flight Equipment Section (35 OSS/OSOL) for medical clearance examinations and egress training, respectively. 35 OSS/OSOS will forward the names of selectees, a requested class schedule, and egress instructor (if known) to 35 OSS/OSOL. **These requisites should be scheduled and completed once a week, normally on Tuesday,** to fly by Friday the same week (within 72 hrs). FAM flyers must make themselves available to attend the Tuesday pre-requisite training if scheduled to fly that week.

A14.2.3.2.5. **(Added-35FW)** Provide the selectee with an Incentive/Familiarization Orientation Flight Appointments/Checklist outlining scheduled pre-flight appointments and an Additional Flight Information sheet (Attachment 18 & Attachment 19).

A14.2.3.2.6. **(Added-35FW)** Coordinate the 35 OG orientation flight selection process. Annually, send a memorandum to each unit, within the Operations Group, soliciting orientation flight nominations.

A14.2.3.2.7. **(Added-35FW)** Annually, consolidate all group orientation nomination lists and forward them to 35 FW/CC for final approval.

A14.2.3.2.8. **(Added-35FW)** For Deployments/TDYs, consolidate updated group lists submitted for flying TDYs, and forward to FW/CC for approval NLT 7 days prior to departure.

A14.2.3.2.9. **(Added-35FW)** Coordinate equipment fitting with 13/14 FS Aircrew Flight Equipment shops prior to the flight.

A14.2.3.3. **(Added-35FW)** Selectee will:

A14.2.3.3.1. **(Added-35FW)** Inform 35 OSS/OSOS of any projected leave and/or TDY which may affect scheduling the flight.

A14.2.3.3.2. **(Added-35FW)** Accomplish all items on their checklist prior to the flight.

A14.2.3.3.3. **(Added-35FW)** Receive a medical evaluation with a flight surgeon within 7 days of the flight. Flight Medicine will screen selectee's medical records, examine and brief the individual on the physiological effects of flying. If qualified to fly, the flight surgeon will issue an AF IMT 1042. If not physically qualified to fly,

the selectee will notify 35 OSS/OSOS and specify whether the disqualification is temporary or permanent.

A14.2.3.3.4. **(Added-35FW)** Present completed checklist and AF IMT 1042 to the operations desk at the squadron conducting the flight. The final copy of the checklist will be sent to OSOS.

A14.2.3.4. **(Added-35FW)** 35 OSS/OSOL (Wing Aircrew Flight Equipment) will:

A14.2.3.4.1. **(Added-35FW)** Coordinate with selectee to accomplish egress training IAW AFI 11-401 and PACAF guidance within 72 hours of flight.

A14.2.3.4.2. **(Added-35FW)** Initial and date the selectee's preflight checklist upon completion of egress training.

A14.2.3.5. **(Added-35FW)** 13/14 FS Aircrew Flight Equipment Office will:

A14.2.3.5.1. **(Added-35FW)** Outfit the selectee with a flight suit, helmet, mask, anti-G garment, survival vest, and anti-exposure suit (if required).

A14.2.3.5.2. **(Added-35FW)** Initial and date the selectee's preflight checklist once actions are complete.

A14.2.3.6. **(Added-35FW)** Operational fighter squadron will:

A14.2.3.6.1. **(Added-35FW)** Ensure all prerequisites (AF IMT 1042 and orientation flight checklist) are complete.

A14.2.3.6.2. **(Added-35FW)** Retain all documentation (AF IMT 1042 and checklist) for 3 months.

A14.2.3.6.3. **(Added-35FW)** Provide escort (if required) to and from the squadron and a qualified mission pilot to conduct the orientation flight.

A14.2.4. **(Added-35FW)** The following restrictions apply to orientation sorties:

A14.2.4.1. **(Added-35FW)** Aircraft in a test program or functional check flight (FCF) will not be used.

A14.2.4.2. **(Added-35FW)** Anti-exposure suits will be worn IAW local guidance.

A14.2.4.3. **(Added-35FW)** Weather minimums will be the mission pilot's weather category.

A14.2.4.4. **(Added-35FW)** Refer to attachment 5 for further flight restrictions.

Table A14.1. (Added-35FW) Recurring FAM Program with DLOs

RECURRING FAM PERSONNEL	DESIRED LEARNING OBJECTIVES
Wing Electronic Warfare Officer (EWO)	Understand 35 FW core msn/F-16 system capabilities and SEAD integration
Wing and Squadron Intelligence and personnel	A/A & A/G target ID, TGP interpretation
35 FW Flight Physiologist/Technician	Understand real world aviation physiological effects/stresses on 13/14 FS personnel
610 Air Control Flight personnel	Understand core msn fundamentals and how they relate to supporting A/A & A/G operations
35 FW/CVN personnel	Understand core msn fundamentals and how they relate to support operations

A14.2.5. **(Added-35FW)** Distinguished Visitors (DV) are scheduled according to priority levels from 1 to 4. DVs are not prioritized according to earlier DEROS. The higher priority level (1) will receive familiarization flights before the lesser priority (4). OSO will meet 35 FW/CC's intent to fly a minimum 16 individuals per quarter. Wing Scheduling will submit a list each quarter with primary/alternate, DV selections.

Attachment 15 (Added-35FW)

ORGANIZATION / GROUP FAM FLIGHT NOMINATION PROCESS

A15.1. (Added-35FW) The following OPR's have selection authority for the units indicated:

Table A15.1. (Added) Unit Selection Authority

OPR	ASSIGNED UNITS
35th Fighter Wing/CC	35 FW Staff, ADC, AFN, AFOSI, 35 CPTS, JTAGS, Annual award winners
35th Operations Group/CC	35 OG, 35 OSS, 13 FS, 14 FS, 610 ACF
35th Maintenance Group/CC	35 AMXS, 35 MXS
35th Mission Support Group/CC	35 LRS, 35 SFS, 35 FSS, 35 CONS, 35 CS, 35CES, DECA, AAFES, DoDDS
35th Medical Group/CC	35 AMDS, 35 DS, 35 MDOS, 35 MDSS, 35 MSGS
Misawa Security Operations Center/CC	301 IS, 403 MI DET, 373 SPTS
*Naval Air Facility Misawa	*NAF Misawa, CTF 72/57, NMC, MOMAU 12, PSD, FISC, NIOC, NAVPACMETOCDET/LNSC, NAVECOMDET, Deployed Patrol Squadron, NAVFACFE, AIMD

A15.2. (Added-35FW) FAM Flight Allocations. 35 FW/CC allotments are as required. Each group commander may nominate up to 10 personnel plus three alternates annually, and should prioritize these individuals on each list. The NAF may request FAM flights on an "as available" basis with the 35 FW/CC. 35 FW Annual award winners will automatically be placed on the FAM list and will not count against annual group allocations.

A15.3. (Added-35FW) 35 OSS/OSOS will compile each group list into a master document for FW/CC approval with names sequentially listed in order per table 15. 1 (For example, designate one name from each OPR starting with 35 FW/CC, then 35 OG,MXG,MSG,MDG, MSOC; repeated until master list is complete). Once approved, OSOS will send unit commanders the current list, indicating slots already flown and slots remaining for the quarter. Unit commanders may reprioritize their allocated slots, or rescind and submit different names as appropriate. The revised slot allocation will be resubmitted (via Attachment 17). 35 OSS/OSOS will update the familiarization list quarterly.

Attachment 16 (Added-35FW)

MEMORANDUM FOR 35 FW APPROVAL

Figure A16.1. (Added) Sample

MEMORANDUM FOR 35 OSS/OSOS

FROM: 35 FW/CC

SUBJECT: F-16 Familiarization Flight Master List for CY 2015

1. The following individuals are my prioritized selectees for Calendar Year 2015 F-16 familiarization flights:

NAME	OFFICE SYMBOL	PHONE	DEROS

TIMOTHY J. SUNDVALL, Colonel, USAF
Commander, 35th Fighter Wing

cc:
35 OG/CC
35 MXG/CC
35 MSG/CC
35 MDG/CC
MSOC/CC

Attachment 17 (Added-35FW)

MEMORANDUM OF SELECTION

Figure A17.1. (Added) Sample

MEMORANDUM FOR 35 OSS/OSOS

FROM: Your Group/CC

Subject: Familiarization Flight Selection for CY 2015

1. The following individuals are my prioritized selectees for Calendar Year 2015 (Your Group) F-16 familiarization flights:

PRIMARY NAME	OFFICE SYMBOL	PHONE	DEROS

GP/CC, Colonel, USAF
Commander, 35th Fighter Wing

Attachment 18 (Added-35FW)

INCENTIVE/FAMILIARIZATION FLIGHT CHECKLIST

Figure A18.1. (Added) Sample Incentive/Familiarization Flight Checklist

DEPARTMENT OF THE AIR FORCE
PACIFIC AIR FORCES

MEMORANDUM FOR: XXXXXXXX

FROM: 35 OSS/OSOS

SUBJECT: Incentive/Familiarization Flight Appointments/Checklist

1. Congratulations on being selected to receive an Incentive/Familiarization Flight in an F-16, the "World's Finest Fighter Aircraft", you will fly with the XX Squadron.

2. IAW current directives, the following appointments and actions must be completed prior to your flight. If you are unable to make these appointments or fly as scheduled due to illness, emergencies, last minute duty schedule changes, exercise tasking, etc., please notify this office immediately to prevent cancellation of a sortie. (Don't worry if you find yourself in this predicament, you will be re-scheduled to fly another day!).

A18.1. (Added-35FW) Appointments and Schedule for Pre-Flight Requirements. **Note: *highlighted time is your showtime.**

Table A18.1. (Added) Appointments / Schedule Place Date Time

APPOINTMENT	PLACE	DATE/TIME	Class Length
Flight Physical	Base Hospital, Bldg 99		
Physiological Training	Aircrew Flight Equipment, Wing SERE Classroom Bldg 918		(45 Mins)
Seat/ Egress Training	Aircrew Flight Equipment, Wing SERE Classroom Bldg 918		(45 Mins)
Hanging Harness	Aircrew Flight Equipment, Wing SERE Classroom Bldg 918		(30 Mins)
Aircrew Flight Equipment Training	Aircrew Flight Equipment, Wing SERE Classroom Bldg 918		(1 Hour)
WST	Aircrew Flight Equipment, Wing SERE Classroom Bldg 918		(30 Mins)
Equipment Fitting Min of 1 day prior	**XX FS,** Bldg. XXXX		(30 Mins)
Flight Briefing	**XX FS,** Bldg. XXXX		
Flight	**XX FS,** Bldg. XXXX		

A18.2. (Added-35FW) Complete the following checklist:

Table A18.2. (Added) Sample Incentive / Familiarization Flight Checklist

a. Medical Examination by the Flight Surgeon: Located at the Base Hospital (Bldg. 99). **Please arrive early enough to pick up your medical records and be at the Flight Surgeon's office at the appointed time.** If you are medically cleared to fly, the Flight Surgeon will provide you with a signed AF IMT 1042, Medical Recommendation for Flying or Special Duty. If you do not pass the medical examination, notify 35 OSS/OSOS (226-3841) immediately.
b. Wing SERE Classroom: Located in Bldg. 918 (226-1735). You must wear a utility uniform (BDU or equivalent) and combat boots to this appointment.
PHYSIOLOGICAL TRAINING ACCOMPLISHED:
CLASS DATE/TIME
INSTRUCTOR'S SIGNATURE
AIRCREW FLIGHT EQUIPMENT/HANGING HARNESS TRAINING ACCOMPLISHED:
CLASS DATE/TIME: _
INSTUCTOR'S SIGNATURE:
WST TRAINING ACCOMPLISHED:
CLASS DATE/TIME: _
INSTUCTOR'S SIGNATURE:
SEAT/EGRESS TRAINING ACCOMPLISHED:
CLASS DATE/TIME
INSTRUCTOR'S SIGNATURE
c. Aircrew Flight Equipment Fitting: You will be provided all equipment required for flight except combat boots and cotton under garments, which you must wear to this appointment (canvas jungle boots are not authorized). Located in 13/14 FS (226-1313/1499), AFE (226-4253/226-1421)
AIRCREW FLIGHT EQUIPMENT FITTING ACCOMPLISHED:
DATE/TIME:
TECHNICIAN'S SIGNATURE:
d. On the day of your flight, report to the 13/14 FS Operations Desk (226-1313/1499). You will provide the operations specialist this signed/completed checklist and your medical clearance (AF IMT 1042). Be prepared to fly! Make sure you bring your flight suit and required attire. Once you are cleared, you will be given a flight briefing with the pilot, step to a jet, and fly. **Reminder:** If all items are not completed, this sortie will not be re-scheduled.
e. If you have any questions or problems regarding your appointments and flight, contact our 35 OSS Wing Scheduling office at 226-3841 as soon as possible.

f. **ADDITIONAL ORIENTATION FLIGHT INFORMATION** Your flight will be geared to your level of personal comfort. Although the F-16 is a high performance combat aircraft, capable of maneuvers exceeding 9 times the force of normal gravity, the purpose of the ride is to familiarize you with the aircraft and its capabilities. For most non-flyers, this ride is a "once in a lifetime" opportunity. There are a variety of maneuvers the pilot can perform during your flight. The pilot will discuss them with you and tailor your mission profile to accomplish an effective mission.
g. **Escorts:** The Fighter Squadrons are responsible for escorting you to F-16 parking ramp restricted areas. If you would like to have your spouse/family to accompany you to your flight, you must notify them.
h. **Cameras:** No cameras are allowed in the F-16. Cameras are not allowed in the 13 FS and 14 FS HAS areas unless coordinated with the squadron ops desks, 35 FW/CVN and 35 FW/PA.
i. **Aircrew Flight Equipment and Safety Basics:** Wear cotton underwear and combat boots (preferably without steel toe) during your flight. Do not wear an under-wire bra, oil-based cosmetics, hairpins / barrettes, or any jewelry.